DOCKET FILE COPY ORIGINAL

ORIGINAL

Before the
FEDERAL COMMUNICATIONS COMMISSION
Washington, D.C. 20554

RECEIVED

OCT 24 1997

FEDERAL COMMUNICATIONS COMMISSION
OFFICE OF THE SECRETARY

In the Matter of	)	
	)	
Procedures for Reviewing Requests for Relief From State and Local Regulations Pursuant to Section 332(c)(7)(B)(v) of the Communications Act of 1934	)	WT Docket No. 97-192
	)	
Guidelines for Evaluating the Environmental Effects of Radiofrequency Radiation	)	ET Docket No. 93-62
	)	
Petition for Rulemaking of the Cellular Telecommunications Industry Association Concerning Amendment of the Commission's Rules to Preempt State and Local Regulation of Commercial Mobile Radio Service Transmitting Facilities	)	RM-8577

REPLY COMMENTS OF POWERTEL PCS, INC.

Powertel PCS, Inc. ("Powertel"), by its attorneys, hereby submits its reply comments in response to the Notice of Proposed Rulemaking issued in the above-captioned proceeding.[1] Powertel, through wholly-owned subsidiaries, holds numerous broadband PCS licenses throughout the southeastern United States, and is an interested party in this proceeding. Powertel supports the FCC's efforts to clarify its rules regarding (i) RF compliance information state or local governments

[1] In the Matter of Procedures for Reviewing Requests for Relief from State and Local Regulations Pursuant to Section 332(c)(7)(B)(v) of the Communications Act of 1934; Guidelines for Evaluating the Environmental Effects of Radiofrequency Radiation; Petition for Rulemaking of the Cellular Telecommunications Industry Association Concerning Amendment of the Commission's Rules to Preempt State and Local Regulation of Commercial Mobile Radio Service Transmitting Facilities, WT Docket No. 97-192, ET Docket No. 93-62, RM-8577, Second Memorandum Opinion and Order and Notice of Proposed Rulemaking, FCC 97-303 (released August 25, 1997) ("NPRM").

No. of Copies rec'd 0+4
List ABCDE

may request from personal wireless providers; and (ii) the definition of "State or local government or instrumentality thereof." With respect to these issues, Powertel supports adoption of the "limited showing" requirement regarding RF compliance and urges the Commission to apply its preemptive power to private entities such as homeowners associations as well as State or local governments or instrumentalities thereof for purposes of furthering the Congressional intent of the Telecommunications Act of 1996 (the "Act").

I. Demonstration of RF Compliance

The NPRM seeks comment on two alternative showings that would be permissible for local and state governments to request personal wireless providers to submit as part of the local approval process: a "limited showing" and a "more detailed showing." NPRM ¶¶ 143-144. Powertel submits that the Commission should adopt the "limited showing" because this alternative conforms most closely to the language and intent of Section 332(c)(7)(B)(iv).

Section 332(c)(7)(B)(iv) of the Communications Act of 1934, as amended, provides as follows:

> No State or local government or instrumentality thereof may regulate the placement, construction, and modification of personal wireless service facilities on the basis of the environmental effects of radio frequency emissions to the extent that such facilities comply with the Commission's regulations concerning such emissions.

As evidenced by the language of this rule, the only showing personal wireless providers are required to make to state or local governments is one of compliance with FCC regulations. The "limited showing" alternative proposed by the FCC requires personal wireless providers to certify that categorically excluded facilities are in compliance with Commission RF guidelines. This is the identical showing that wireless providers must make to the FCC. For facilities that are not categorically excluded, state or local governments may request all of the documents on RF emissions

that the service provider has submitted to the FCC. These documents would be the basis of any Commission decision regarding the facilities' RF emissions, and would certainly be sufficient to enable state or local governments to verify RF compliance with respect to non-categorically excluded facilities.

The "more detailed showing," however, goes far beyond the scope of Section 332(c)(7)(B)(iv). This alternative proposes to require wireless carriers to submit a demonstration of compliance for facilities that are categorically excluded from routine evaluation. If adopted, this requirement would be extremely burdensome to wireless carriers, while providing little, if any, increased benefit to state and local governments. To require wireless carriers such as Powertel to perform measurements and evaluations not required by the FCC is to allow state and local governments to base siting decisions upon a more stringent showing than required by the FCC. This is a direct thwarting of the Congressional intent of the Act, which expressly limits state and local jurisdiction over RF emissions in favor of the federal guidelines.

Powertel has licenses to provide wireless service in twelve (12) states which encompass countless local jurisdictions. Powertel is currently operating hundreds of wireless facilities in these countless localities, and virtually all of these facilities are categorically excluded from routine RF evaluation. If each locality were permitted to request varying levels of RF compliance information of wireless licensees, Powertel would have to devote substantial administrative and economic resources to state and local RF compliance for sites which, according to the FCC, "offer little or no potential for exposure in excess of [the Commission's] limits," NPRM ¶ 7, and which, most importantly, are already required to be compliant with FCC RF guidelines. Powertel agrees with the comments submitted by GTE Service Corporation: "There is no sustainable reason why state and

local authorities should need or require any greater proof of compliance than the FCC itself requires."[2]

Attached hereto as Exhibit A is an Engineering Report which provides an RF evaluation for typical configurations of broadband PCS sites that are categorically excluded from routine RF evaluation. The Engineering Report demonstrates that the RF emissions of the analyzed configurations are compliant with FCC guidelines and well within the range of categorically excluded facilities. While Powertel acknowledges that its Engineering Report is representative of typical wireless facility configurations, and certainly not exhaustive, the Engineering Report illustrates how, in instances where categorically excluded facilities are involved, a formal demonstration of compliance is wholly unnecessary because the facilities are compliant with FCC guidelines.

In the event the "more detailed showing" is adopted, Powertel questions how the state or locality would analyze and interpret the information provided to it by the wireless licensee. A situation may arise where the locality disputes whether a wireless licensee has, in fact, complied with FCC guidelines. This anomalous, yet very real, possibility is completely averted by adoption of the "limited showing" alternative. Further, it is important to note that Congress designated RF evaluation to the FCC because the FCC that has the requisite expertise to evaluate RF emissions. While Congress has preserved local zoning jurisdictions in the Act, it took great measures to remove this independent evaluation process from the state and local authorities which, in most instances, lack engineering expertise to evaluate the very measurements and evaluations which they may seek to require carriers to provide. The result would be the expense of local and state authorities hiring

---

[2]Comments of GTE Service Corporation, WT Docket No. 97-192, October 9, 1997, at 8.

outside "experts" to evaluate the RF data submitted by the carriers. Any dispute, by necessity, would need to be decided by the FCC. This may lead to the FCC reviewing countless measurements and evaluations for categorically excluded facilities. If the FCC perceived a need to perform such analysis, it would have required that the data be submitted to the FCC in the first place. Obviously, the FCC has determined that there is no need for the submission of that data for facilities which it deems as "categorically excluded" from that requirement.

II. Preemption of Private Entities

The NPRM seeks comment on whether the definition of "State or local government or instrumentality thereof" should include private entities, such as homeowners associations and private land covenants, and whether decisions by such private entities should be subject to Commission review. NPRM ¶ 141. Powertel submits that private entities such as homeowners associations should be treated as state or local governments, and their decisions must be subject to Commission review in order to fulfill the intent of Section 332(c)(7)(B)(v).

The Commission observes that private entities may impede the deployment of wireless services. NPRM ¶ 141. Powertel has been aggrieved by the arbitrary actions of a private architectural review board. The Fripp Island Development Corporation ("FIDC"), a private entity, has architectural review authority written into its deed of the property to the water authority which owns a water tower in Fripp Island, South Carolina. The water authority agreed to lease the existing structure to Powertel for implementation of a PCS site. Powertel applied for the requisite authorization to mount its PCS facilities on this existing water tower. Powertel's application was denied by the architectural review board ("Board"). The Board purportedly denied Powertel's application because of the appearance of Powertel's PCS antennas on the water tower. The Board's

decision, in its entirety, states as follows:

> The Fripp Island Architectural Review Board, having approval authority for the [water tower], has reviewed your plans and denies your approval. The denial is due to the unacceptable appearance of the antenna system on the tank.[3]

This capricious action by the Board, however, leaves the Board free to allow a competing CMRS carrier to mount its antennas on the very same water tower.

This action by the Board is arguably a violation of the intent of Section 332(c)(7)(B)(I)(i), which mandates the regulation, construction, or modification of personal wireless facilities by state or local governments, or instrumentalities thereof, shall not unreasonably discriminate among providers of functionally equivalent services.[4] The Board's cursory denial of Powertel's application also may constitute a violation of Section 332(c)(7)(B)(iii), which requires state or local governments or instrumentalities thereof to deny a request to place, construct or modify personal wireless service facilities in writing, supported by substantial evidence contained in a written record.[5] This situation illustrates why private entities' actions must be subject to Commission review pursuant to Section 332(c)(7)(B) of the Act.

Private entities currently have the ability to act in contravention of the Communications Act, acting with quasi-governmental authority and thwarting the development of a competitive wireless marketplace, while wireless carriers remain virtually powerless to mount any challenge to their actions. The Commission, however, has the authority to preempt the actions of private, non-governmental entities. The Commission has previously preempted the actions of non-governmental

---

[3] The Board's decision is attached hereto as Exhibit B.

[4] 47 U.S.C. § 332(c)(7)(B)(I).

[5] 47 U.S.C. § 332(c)(7)(B)(iii).

entities when implementing other provisions of the Telecommunications Act of 1996 concerning over-the-air reception devices.[6] Although the Congressional intent to preempt private entities was more apparent with respect to the Earth Station Preemption Order, preemption of nongovernmental restrictions is also appropriate with respect to Section 332(c)(7)(B).

In the Earth Station Preemption Order, the Commission observed that "[t]he government may abrogate restrictive covenants that interfere with federal objectives enunciated in a regulation."[7] The arbitrary exercise of the FIDC Board's zoning authority interferes with the federal objective of facilitating competition in the wireless marketplace. If the Board were to allow another CMRS carrier on the tower, the FIDC Board would be discriminating against Powertel, in favor of a functionally equivalent CMRS provider, all pursuant to an arbitrary, unsupported decision. Even where a private board applies its "authority" consistently to all carriers, it exercises authority to preclude the ability of a wireless carrier to offer any service to the locality within its jurisdiction. In the Earth Station Preemption Order, the Commission also concluded to afford nongovernmental restrictions less deference than local government regulations.[8] The Commission should also find that nongovernmental restrictions are entitled to less deference than local government regulations in this proceeding because there is no legitimate state interest that is being advanced by allowing private entities to act in violation of the Act.

Finally, the preemptive authority to be exercised by the Commission in the Earth Station

---

[6] In the Matter of Preemption of Local Zoning Regulation of Satellite Earth Stations, Implementation of Section 207 of the Telecommunications Act of 1996, IB Docket No. 95-59, CS Docket No. 96-83, Report and Order, Memorandum Opinion and Order, and Further Notice of Proposed Rulemaking, 3 Comm. Reg. 1308 (1996) ("Earth Station Preemption Order")

[7] Earth Station Preemption Order ¶ 44.

[8] See Earth Station Preemption Order ¶ 46.

Preemption Order is much broader than the preemptive authority being considered in the instant proceeding. In the Earth Station Preemption Order the Commission clearly set forth its authority, with judicial precedent, for its ability to preempt private entities which interfere with the Commission's ability to license interstate wireless services. Section 332(c)(7)(B) of the Act is not bestowing upon the Commission any new preemptive authority. To the contrary, Section 332(c)(7)(B) seeks to limit the Commission's preemption of state or local government decisions unless those decisions fall into specific, narrow categories. This section does not seek to so limit the FCC's authority to preempt any entities other than state and local governments. In other words, the limitation of the FCC's authority to preempt state and local governments is not intended to limit the broader FCC preemption authority over private entities. Because private entities can thwart the purposes and clear intent of the Communications Act and impede the development of a competitive wireless marketplace, the Commission should preempt private entities from doing so as well as preempting "State or local governments or instrumentalities thereof" from undermining the clear congressional intent of the Act.

Powertel also supports the comments of AT&T Wireless Services, Inc. ("AT&T Wireless") with respect to this issue. AT&T Wireless argues that Section 332(c)(7)(B)(v) should preempt the efforts of private entities to limit siting of personal wireless facilities because such entities perform quasi-governmental functions and should be treated as state actors.[9]

As evidenced by the FIDC example, private entities are using their authority to undermine the purposes of the Act. Unless the FCC preempts nongovernmental action pursuant to the

---

[9] Comments of AT&T Wireless Services, Inc., WT Dcoket No. 97-192, filed October 9, 1997, at 7.

limitations set forth in Section 332(c)(7)(B), competition in the wireless marketplace will be stalled. The Commission can remove the barriers created by nongovernmental entities, and promote competition in the wireless marketplace, by determining that private entities are "State or local government[s] or any instrumentality thereof," and subjecting their decisions to Commission review.

III. CONCLUSION

For the foregoing reasons, the Commission should adopt the "limited showing" described in the NPRM and should preempt nongovernmental restrictions consistent with the Congressional intent of Section 332(c)(7)(B) of the Act.

Respectfully Submitted,

POWERTEL PCS, INC.

By: Jeanne W. Stockman

Michael K. Kurtis
Jeanne W. Stockman
Its Attorneys

Kurtis & Associates, P.C.
2000 M Street, N.W.
Suite 600
Washington, DC 20036
(202) 328-4500

Dated: October 24, 1997

EXHIBIT A

DECLARATION

I, Herbert C. Harris, hereby declare and state as follows:

1. I am a communications consulting engineer with the firm of Kurtis & Associates, P.C.;

2. I graduated from the Johns Hopkins University, Baltimore, Maryland, with a degree of Bachelor of Science in Electrical Engineering in 1981;

3. I was formerly employed by the Federal Communications Commission as an engineer with the Office of Science and Technology, Research and Analysis Division in Columbia, Maryland;

4. I am familiar with the Federal Communications Commission's Rules regarding radio frequency emissions;

5. I am technically qualified and responsible for the preparation and supervision of the attached Engineering Report; and

6. The foregoing statements and those contained in the attached Engineering Report are true and correct of my own knowledge except such statements therein made on information and belief, and as to such statements, I believe them to be true.

I declare under penalty of perjury that the foregoing is true and correct.

Oct. 24, 1997
Date

Herbert C. Harris
Herbert C. Harris

Engineering Report

This report has been prepared for and on behalf of Powertel PCS, Inc. ("Powertel"), the parent company of PCS licensees providing personal communications services to subscribers throughout the southeastern portion of the United States. We have been asked to address in this report the engineering basis upon which the Federal Communications Commission ("FCC") based its decision to categorically exclude PCS facilities, such as Powertel's, from the requirement of routine performance of RF field measurements.

In its Rules and OET Bulletin 65, the Federal Communications Commission has provided guidelines for evaluating radio frequency exposure limits. All FCC licensees must comply with these exposure limits. However, in promulgating its guidelines, the FCC determined that certain services and facilities, based on power and height limitations, would be categorically excluded from routinely performing these measurements and submitting evaluations. The Commission incorporated these guidelines and categorical exclusions into Rule Section 1.1307.

To understand why the FCC, while not excluding services such as PCS from compliance with the exposure limitations chose to categorically exclude them from the measurement and evaluation requirements, one need only look at the amount of radiation being emitted from such facilities under consideration and apply the formulas.

I have calculated, using equation (6) from the FCC OET Bulletin 65, several distances to the 100% and the 5% power density limits. These distances were obtained using data that is employed at a typical PCS facility. I have also rounded the effective radiated power from this antenna up to the next 100s digit and have included in these numbers the worst case scenario of 100% reflected power. Even with these "worst-case" calculations it is apparent that the area of potential exposure from the typical PCS site is so limited, that there simply is no reason to require a PCS licensee to routinely take field measurements at all facilities.

Specifically, utilizing a 6' directional antenna with an EIRP of 400 watts and solving for the distance to the power density limit in the main lobe of radiation, the resulting exposure limit is approximately 5.2 feet. This means that an antenna on a "typical" monopole tower of 150 feet would have to have someone within 5.2 feet of the front of the antenna to reach this limit. In other words that individual would have to be approximately 144 feet in the air and within 5.2 feet of the front of the antenna. Furthermore, even 5% of the allowable limit only occurs less than 24 feet in front of the antenna and again the individual would have to be approximately 144 feet above ground level elevation.

Because of the antenna design, the energy radiating from the antenna in the direction of the ground where the energy will be the largest is a very small fraction of the overall energy being radiated and produces a 100% power density limit of less than 4 inches toward the ground with the 5% limit being less than 1.5 feet toward the ground. Assuming this energy was radiating from the

bottom of the antenna (worst case, the point closest to the ground), an individual would still have to be approximately 142.5 feet above ground level elevation. Field measurements taken at ground level would therefore be wholly unnecessary when the exposure limitations are virtually limited to the antenna mount itself, 150 feet above ground level.

A typical PCS rooftop installation involves the placement of directional antennas mounted on a parapet wall and pointing over the side of the building. Therefore, the main lobe of radiation is away from the roof (which is usually a controlled access location). The energy at 90 degrees to the main lobe produces a power density limit of less than 2 feet from the sides of the antenna while at 180 degrees from the main lobe or on the roof directly behind the antenna, the power density limit is approximately 4 inches. Requiring the performance and submission of field measurements and evaluations for a rooftop installation such as this, where the field density limit is essentially limited to within 4 inches of the back of the antenna (which means the field density limit is reached before even reaching the antenna mounting pipe), is clearly an unnecessary burden and expense to place upon carriers. Moreover, the FCC, with limited resources, would need to spend countless hours reviewing literally thousands of these evaluations (Powertel PCS sites typically utilize six transmitting antennas at a given site, and Powertel is presently operating nearly 1000 cell sites) where there is virtually no possibility that the exposure limits could be exceeded.

In light of the above, the FCC has reasoned that where, as with PCS, the technologies and system parameters are such that the exposure limits cannot be exceeded, there is no legitimate purpose behind requiring those licensees to perform routine evaluations to demonstrate the obvious.

To further illustrate these points, I have attached to this report drawings of a typical tower mounted and roof mounted PCS facility depicting the exposure limits for these types of installations. It became necessary to utilize insets drawn to a much larger scale than the main drawing in order to provide sufficient detail to provide a meaningful visualization of the distances to the field density limits.

Example of RF Exposure area for Monopole Mounted Antenna (Using a Typical 90° Horizontal Beamwidth Antenna at 400 Watts EIRP and 0° tilt)

Top View

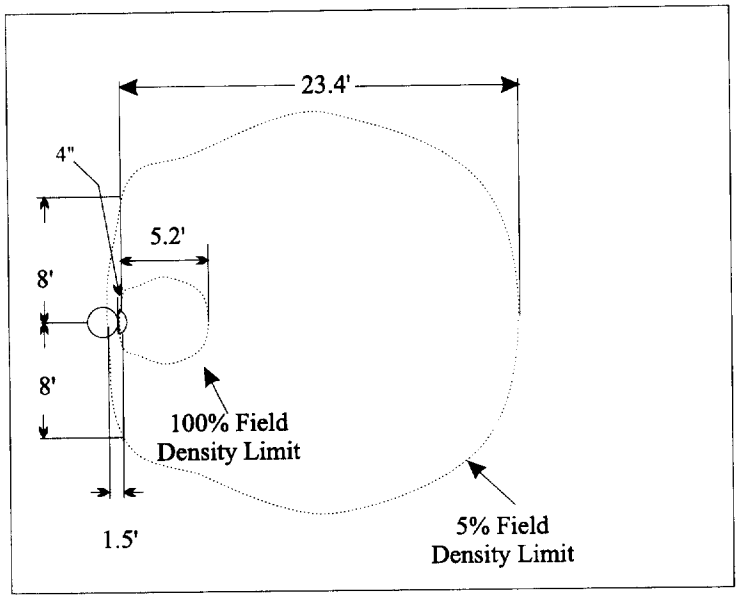

Side View

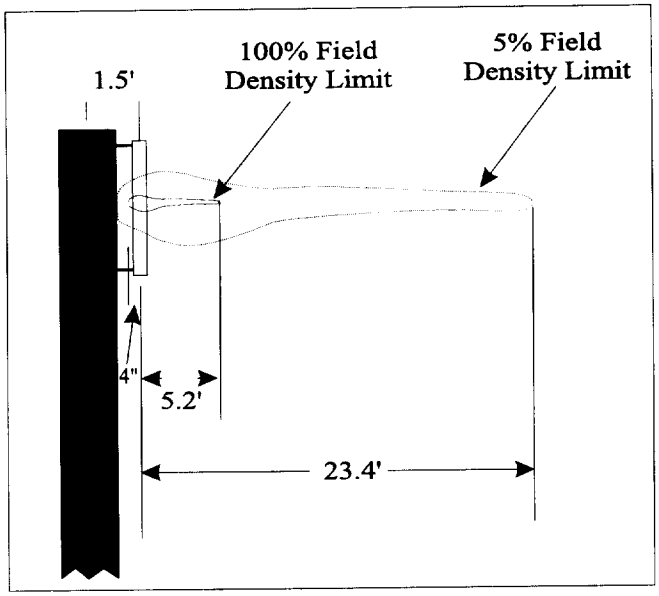

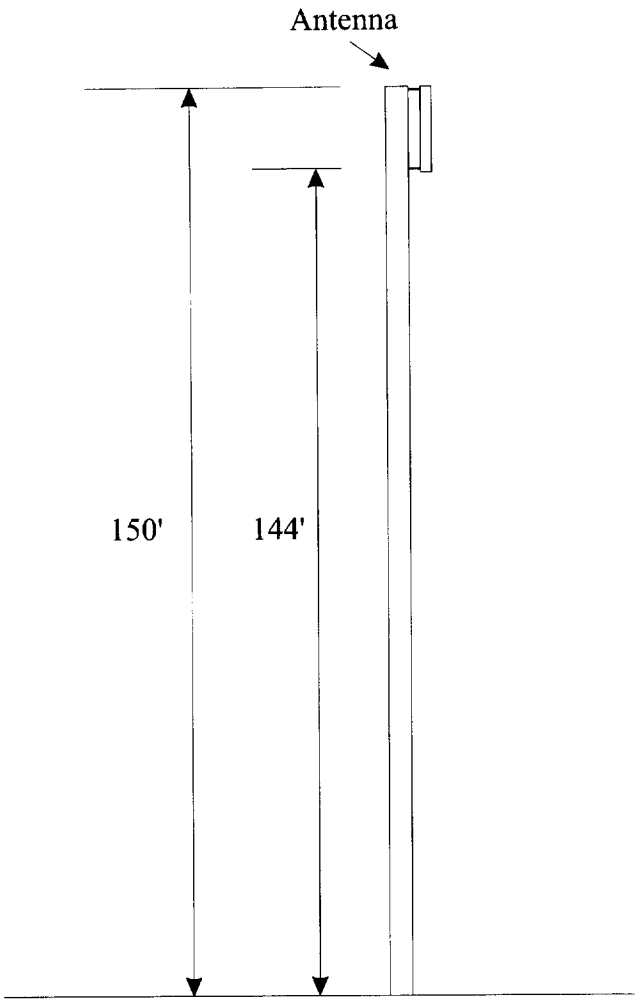

Radio Tower

Not to Scale

© 1997, Kurtis & Associates, P.C.

Example of RF Exposure Area for a Roof-Mounted Antenna Configuration (Using a Typical 90° Horizontal Beamwidth Antenna at 400 Watts EIRP and 0° Tilt)

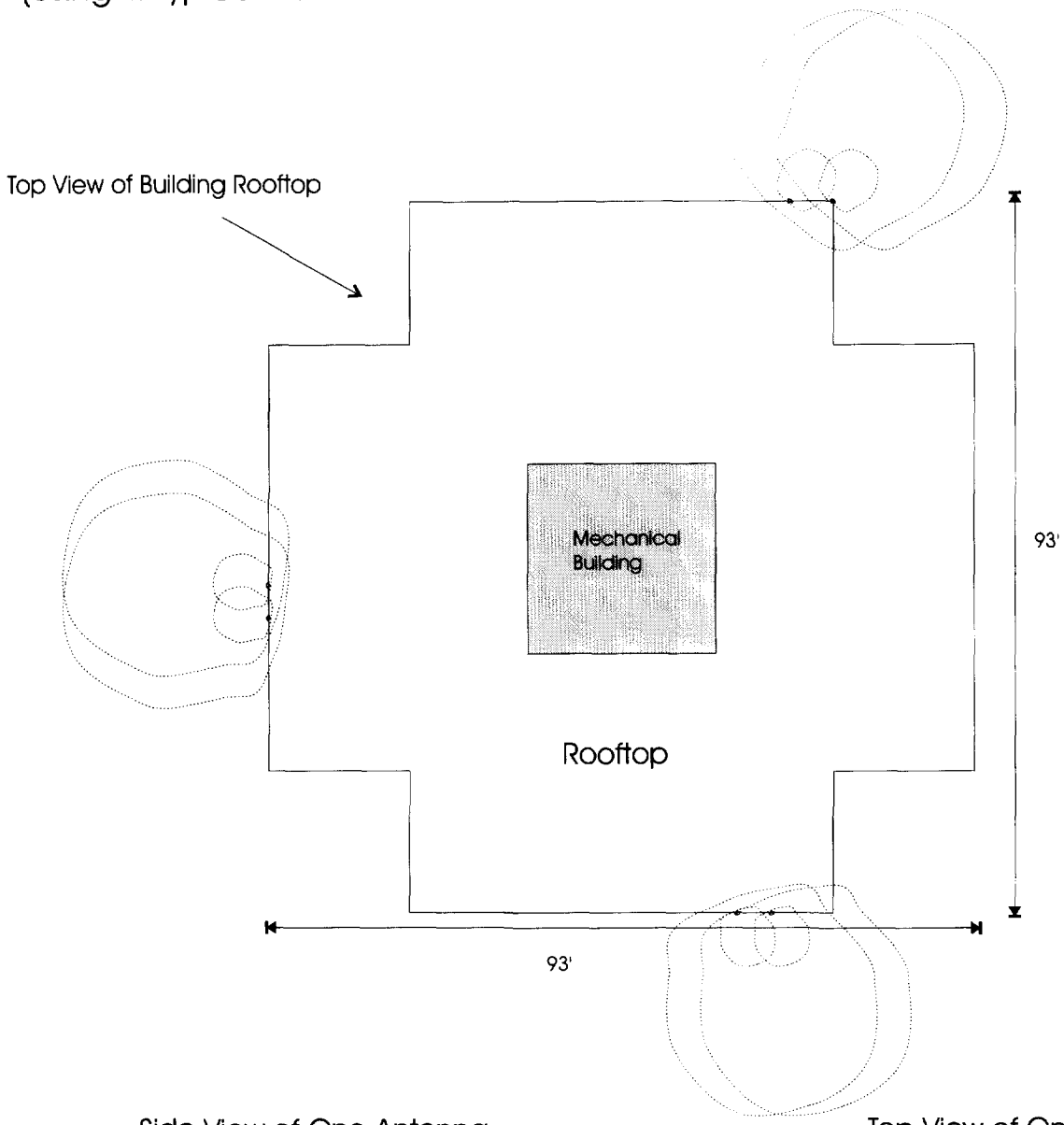

Side View of One Antenna

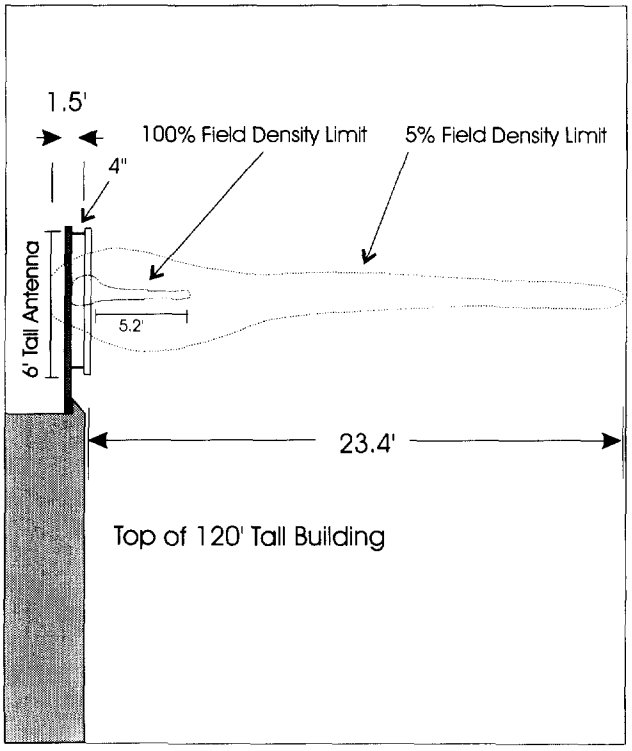

Top View of One Antenna

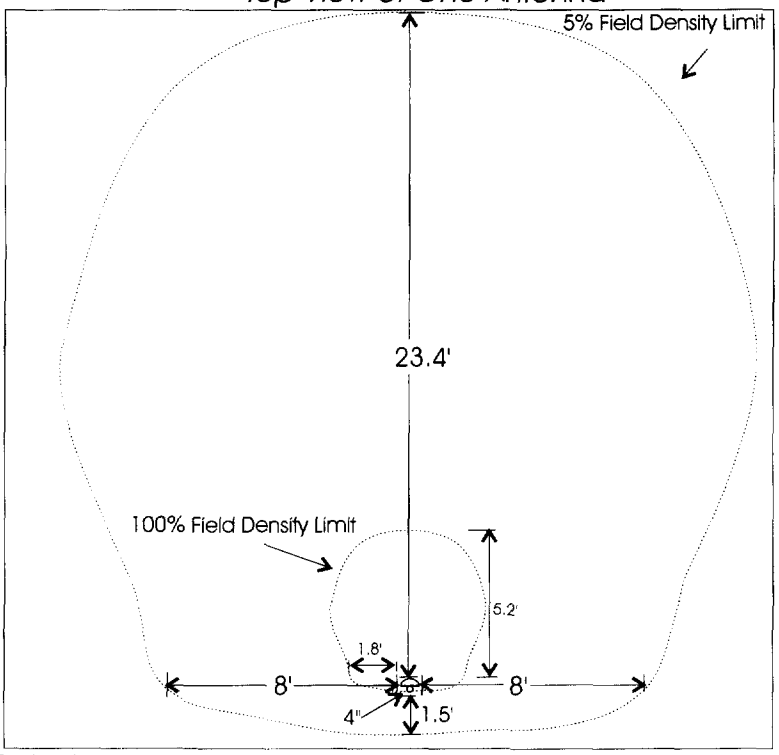

Not To Scale

© 1997 Kurtis & Associates, P.C

EXHIBIT B

SV971

Fripp Island
"The Place To Be"

1 Tarpon Boulevard
Fripp Island, South Carolina 29920
803-838-2131

August 27, 1997

Darren Newsum
TeleSite Services, L.L.C.
6001 Chatham Center, Suite 360
Savannah, Georgia 31405

Re: Tower on Fripp Island's main water tank

Dear Mr. Newsum:

The Fripp Island Architectural Review Board, having approval authority for the above referenced project, has reviewed your plans and denies your approval. The denial is due to the unacceptable appearance of the antenna system on the tank.

Please call me at 803-838-1540 should you have any questions regarding this denial.

Sincerely,
FRIPP ISLAND ARCHITECTURAL REVIEW BOARD

David Christmas
Chairman

DC/dc