(2) When the donor home MC receives the SMDPP requesting delivery to a ported MS, it identifies the destination home MC of the ported MS by performing an MDN-to-MC lookup.

In the event that the donor MC is able to forward the SMDPP to the destination home MC or that it is the destination home MC, the donor MC responds to the originating system with an SMDPP positive acknowledgment.

If the MDN has not been ported out, the donor MC (which is the destination home MC) delivers the message using existing procedures. In some instance, it may be more efficient for the donor MC to determine if it is the home MC before it uses the MDN-to-MC lookup table.

In the ported MDN case, the donor MC forwards the short message to the destination home MC.

(3) When the destination home MC receives the SMDPP request, it delivers the short message following existing procedures.

If the donor MC is not able to forward the SMDPP to the destination home system because the donor MC fails to map the MDN to the destination home MC (e.g., there is no business arrangement or the SMDPP was routed to the donor MC in error), the donor MC responds to the originating system with an SMDPP negative acknowledgment with the SMS_CauseCode=1 for address translation failure.

The advantages of Alternative 1 are as follows:

- It uses the 6-digit MDN-to-MC translation to get to the donor MC.
- There is no need to query the NP SCP. This is a cost saving for the carriers if they have to pay for NP SCP queries.
- Wireless carriers may establish reciprocal business arrangement for the donor MC service.
- Short messages for MDNs that are not ported do not need to be forwarded.
- Short messages from other countries will be delivered to the donor MC using the MDN-to-MC translation.
- There is no need for additional translation types. Thus, no need to pay for additional GTTs.

The disadvantages of Alternative 1 are as follows:

- Business arrangements with every donor MC or third party donor MC need to be established to ensure that SMS forwarding will be provided by the donor MC.
- The donor MC needs to maintain an MDN-to-"serving home" MC lookup table. The donor MC needs to be informed by the old service provider to terminate the message

forwarding service and by the new service provider requesting for the donor MC to forward the ported subscriber's messages to the new home MC. The new service provider will have to establish new business arrangement with the donor system while the old provider terminates its arrangement. This is a responsibility that the donor MC assumed because of its business arrangement. Thus, this function should be inherent to the business agreement.

The following items with regard to Alternative 1 should be further investigated:

- Administration of the MDN-to-MC lookup table within the donor MC.

SMS Alternative 2: Message Center Query, LRN response to Originating MC.

In alternative 2, the short message is always sent to the originator's home MC based on the message originator's MSID (i.e., MSID-to-MC GTT at the STP or internal lookup table at the originating SME). When the originator's MC receives the SMDPP, it queries the NP SCP for the LRN associated with the dialed MDN. The short message is routed to the destination home MC using the LRN (i.e., LRN-to-MC GTT at the STP or internal lookup table at the originator's MC).

Figure 3-9 Alternative 2 for WNP SMS Delivery

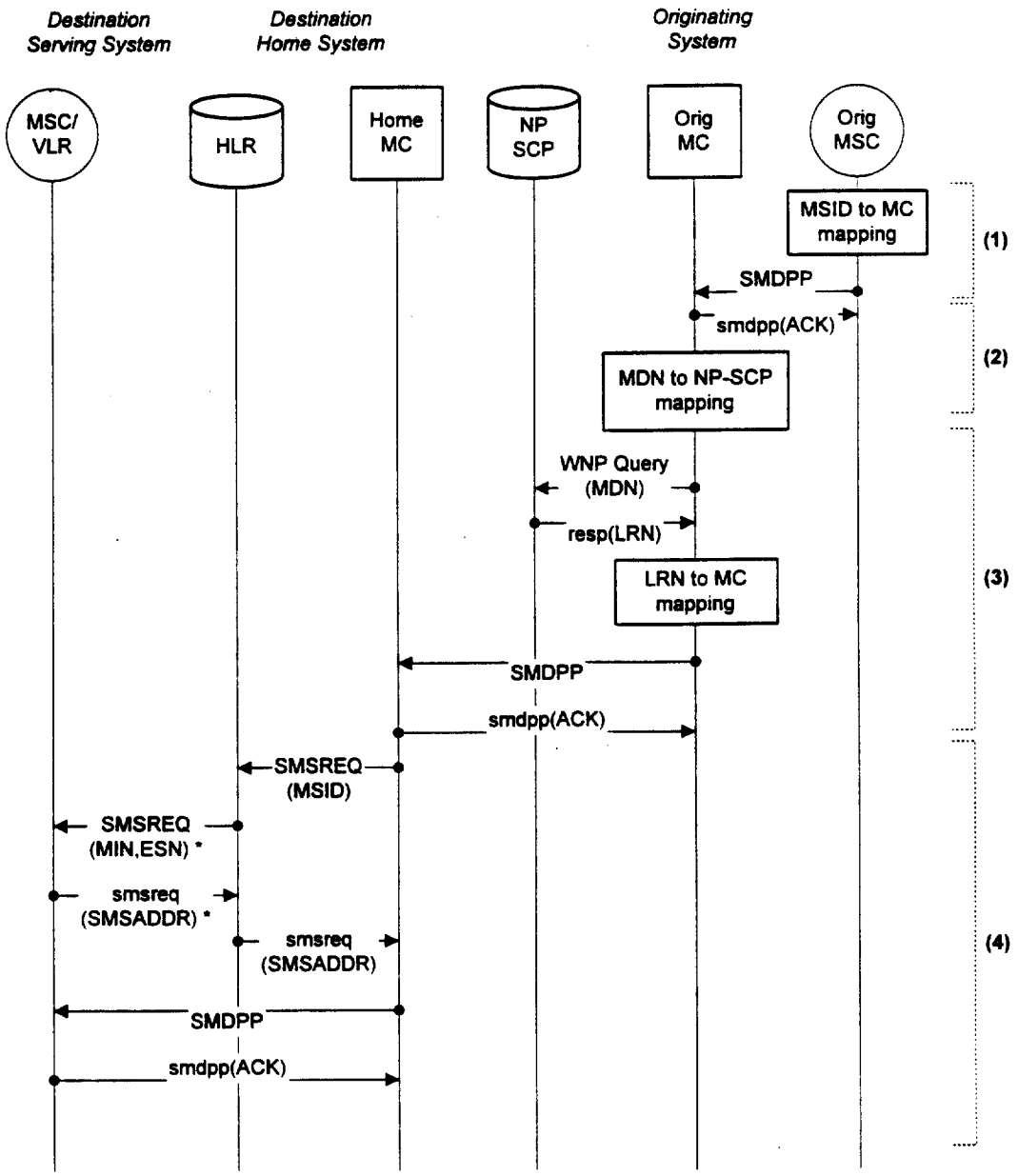

* These messages are sent if the HLR does not hav a current temporary SMS routing address.

The detailed steps are as follows:

(1) The originator's MSC forwards the SMDPP to the originator's home MC using the MSID-to-MC translation via a 6-digit GTT at the STP or internal mapping.

(2) The originator's home MC retrieves the dialed MDN from the SMDPP message. It sends an IS-41 query message to the NP SCP through an STP. The STP performs an MDN-to-NP SCP GTT to identify the appropriated NP-SCP and forward the query message to that NP-SCP.

The NP-SCP maps the MDN to its associated LRN and responds with the LRN to the originator's home MC.

(3) Either an LRN-to-MC GTT translation is done at the STP or, using an internal table in the originator's home MC, the SMDPP message is routed to destination home MC.

(4) The destination home MC delivers the message using existing SMS procedures.

The advantages of Alternative 2 are as follows:

- The existing MSC-NP SCP interface can be used for the MDN-to-LRN translation to support SMS, although it is defined call routing.
- The NP SCP does not need to maintain additional routing information for SMS.

The disadvantages of Alternative 2 are as follows:

- The originator's home MC needs to have IS-41 query capability to query the NP-SCP.
- If multiple MCs serve the same MSC the network needs to support multiple LRNs per MSC or use one of the four digits of LRN for MC.
- New translation types are needed to support the MDN-to-NP SCP GTT (for inter-system) at the STP and the LRN-to-MC GTT at the originator's home MC or STP.
- Administration for the point code of MCs used for the LRN-to-MC GTT will be needed.

The following items with regard to Alternative 2 should be further investigated:

- In order to support international roaming, an originating system (i.e., originator's MC) that is in a foreign country needs to query the NP SCP for an LRN before the SMDPP can be routed to the destination home MC.
- Business arrangements will need to be established with remote NP SCP providers so that queries can be targeted to the appropriate NP SCP with the necessary translation information.

SMS Alternative 3: MSC Query - LRN response to Originating MSC

In alternative 3, the originator's MSC queries the NP SCP for the LRN associated with the dialed MDN. Then, the originator's MSC routes the short message to the destination home MC using the LRN (i.e., LRN-to-MC GTT at the STP or internal lookup table at the originator's MC).

Figure 3-10 Alternative 3 for SMS Delivery

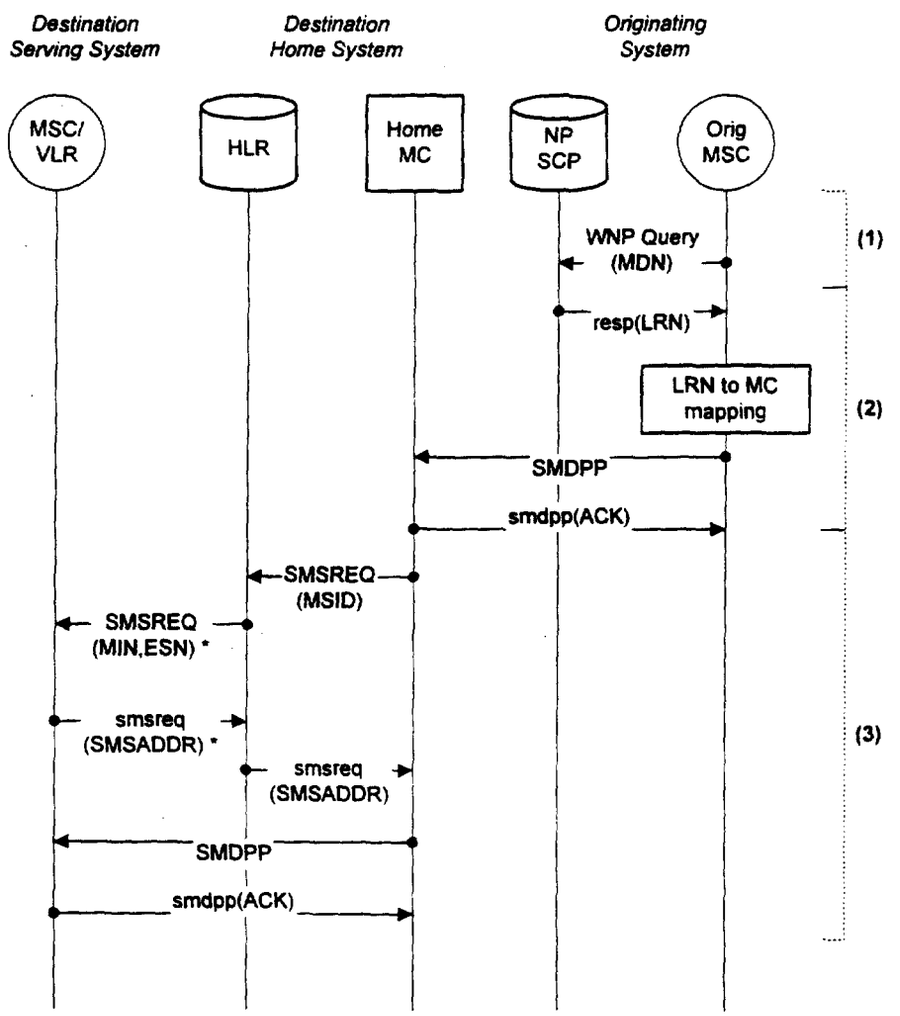

* These messages are sent if the HLR does not hav a current temporary SMS routing address.

The detailed steps are as follows:

(1) The originator's MSC sends an IS-41 query message with the MDN to the NP-SCP through the STP. The STP performs an MDN-to-NP SCP GTT to determine the appropriate NP SCP to forward the query.

The NP-SCP maps the MDN to its associated LRN and responds with the LRN to the originator's MSC.

(2) Either an LRN-to-MC GTT is done at the STP or, using the internal table in the MSC, the SMDPP message is sent to the destination home MC.

(3) The destination home MC delivers the message using existing SMS procedures.

The advantages of Alternative 3 are as follows:

- The existing MSC-NP SCP interface can be used for the MDN-to-LRN translation to support SMS, although it is defined call routing.
- The NP SCP does not need to maintain additional routing information for SMS.

The disadvantages of Alternative 3 are as follows:

- The originator's MSC needs to query the NP-SCP.
- New translation types are needed to support the MDN-to-NP-SCP GTT at the STP and the LRN-to-MC GTT at the MSC or STP.
- Administration for the point code of MCs used for the LRN-to-MC GTT will be needed.
- If force routing is invoked, the originator's MSC, after it receives the LRN from the NP SCP query response, needs to forward the LRN to the MC of the originating system. Enhancement to the IS-41 standard is needed.
- If multiple MCs serve one MSC, the network needs to support multiple LRNs or use one of the four digits of LRN for MC.

The following items with regard to Alternative 3 should be further investigated:

- In order to support international roaming, an originating system (i.e., originator's MSC) that is in a foreign country needs to query the NP SCP for an LRN before the SMDPP can be routed to the destination home MC. This item needs further investigation.
- Business arrangements will need to established with remote NP SCP provider so that queries can be targeted to the appropriate NP SCP with the necessary translation information.

SMS Alternative 4: MDN-to-MSID Translation at the NP SCP

Alternative 4 requires that the NP SCP contains MDN-to-MSID translations. The MDN-to-MSID translations need to be maintained and administered by the regional NPAC-SMSs. Updates for the translation may use the same method defined for MDN-to-LRN translations.

This scheme requires the originating system to query the NP SCP for an MDN-to-MSID translation. Then, the originating system routes the short message to the destination home system using the MSID provided in the query response.

In the event that the dialed MDN is not within the coverage area of the regional NPAC-SMS, the originating system may have to query an NP SCP that contains the data for the region of the dialed MDN or query an NP SCP that contains nationwide NP data.

The first figure illustrates the call flow for the scenario when the MSC queries the NP SCP for the called party's MSID and the second figure shows the call flow for the MC querying the NP SCP.

Figure 3-11 Alternative 4 for WNP SMS Delivery

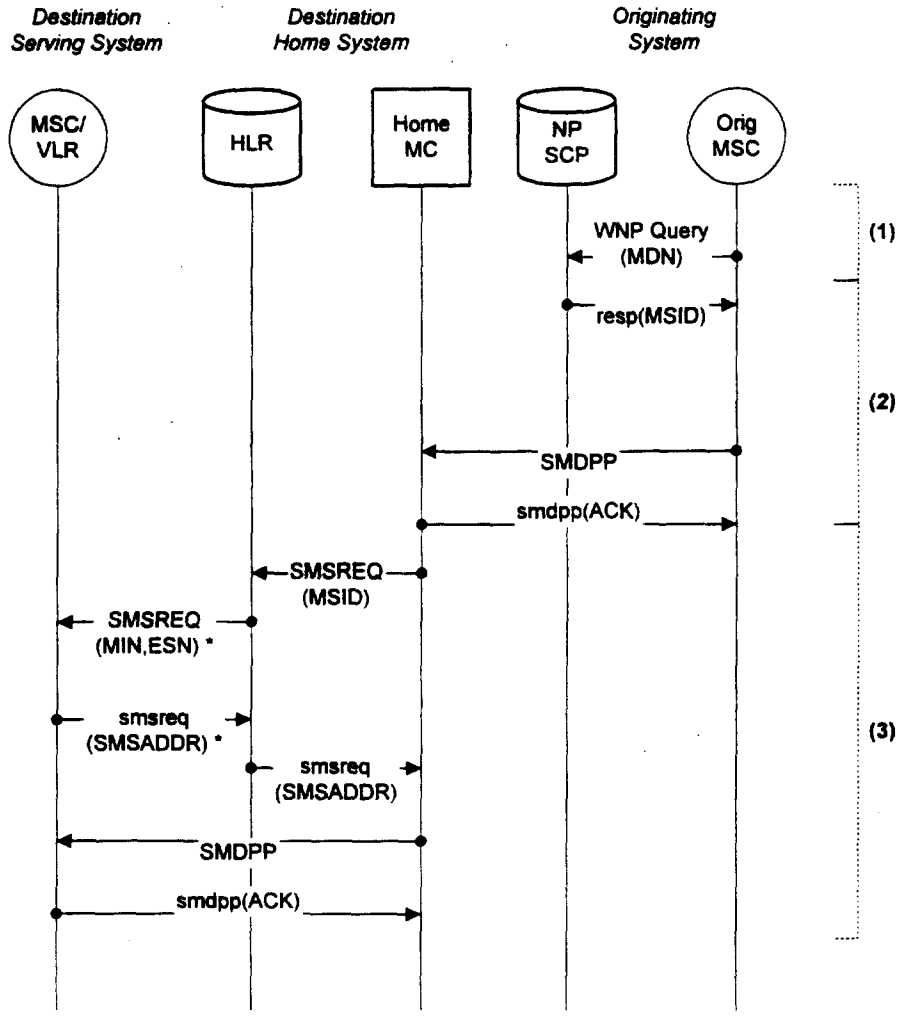

* These messages are sent if the HLR does not hav a current temporary SMS routing address.

The detailed steps are as follows:

(1) The MSC of the originating system queries the NP SCP with the dialed MDN. The NP SCP responds to the query with the MSID associated with the dialed MDN.

(2) The originating system routes the SMDPP message to the destination home MC using the MSID.

(3) When the destination home MC receives the SMDPP request. it delivers the short message following existing procedures.

The advantages of Alternative 4 are as follows:

- The existing MSC-NP SCP interface can be used for the MDN-to-LRN translation to support SMS, although it is defined call routing.
- The MSID-to-MC translation can be used to route short messages to the destination home MC.

The disadvantages of Alternative 4 are as follows:

- NP SCP, local SMS and NPAC-SMS need to support the MDN-to-MSID translations for all wireless subscribers within its region.
- The MSC or the MC need to have the capability to query the NP SCP for an MSID.
- The NP SCP query element needs new protocol.
- Under scenario B where message routing is through the originator's home MC, if the originator's MSC is performing the NP SCP query for an MSID, the originator's MSC needs to forward the MSID to the originator's home MC.

The following items with regard to Alternative 4 should be further investigated:

- Since NPAC-SMSs only contain regional data, it is foreseeable that a query may be launched to an NP SCP that only contain data from the region it is in. Thus, it may be preferable to have the MDN-to-MSID translations for wireless subscribers available nationwide.
- International roaming may require this alternative to have a gateway MSC to launch a query to the NP SCP for the MSID of the called party or may require the foreign country to query the NP SCP.

SMS Alternative 5 - 10-digit GTT at the NP SCP

In alternative 5, the originating MSC or MC routes an SMS Delivery Point to Point (SMDPP) message to called party's home destination MC via a 10-digit GTT at the NP SCP. When the short message arrives at the STP, a 6-digit MDN-to-NP SCP GTT is performed. This may need a new translation type (TT) to forward the message to the NP SCP. Then, the NP SCP maps the MDN to its associated LRN and the incoming translation type to an outgoing translation type for LRN-to-MC translation. The NP SCP relays the short message to the destination MC via a 6-digit LRN-to-MC GTT at an STP.

Figure 3-12 Alternative 5 for SMS Delivery

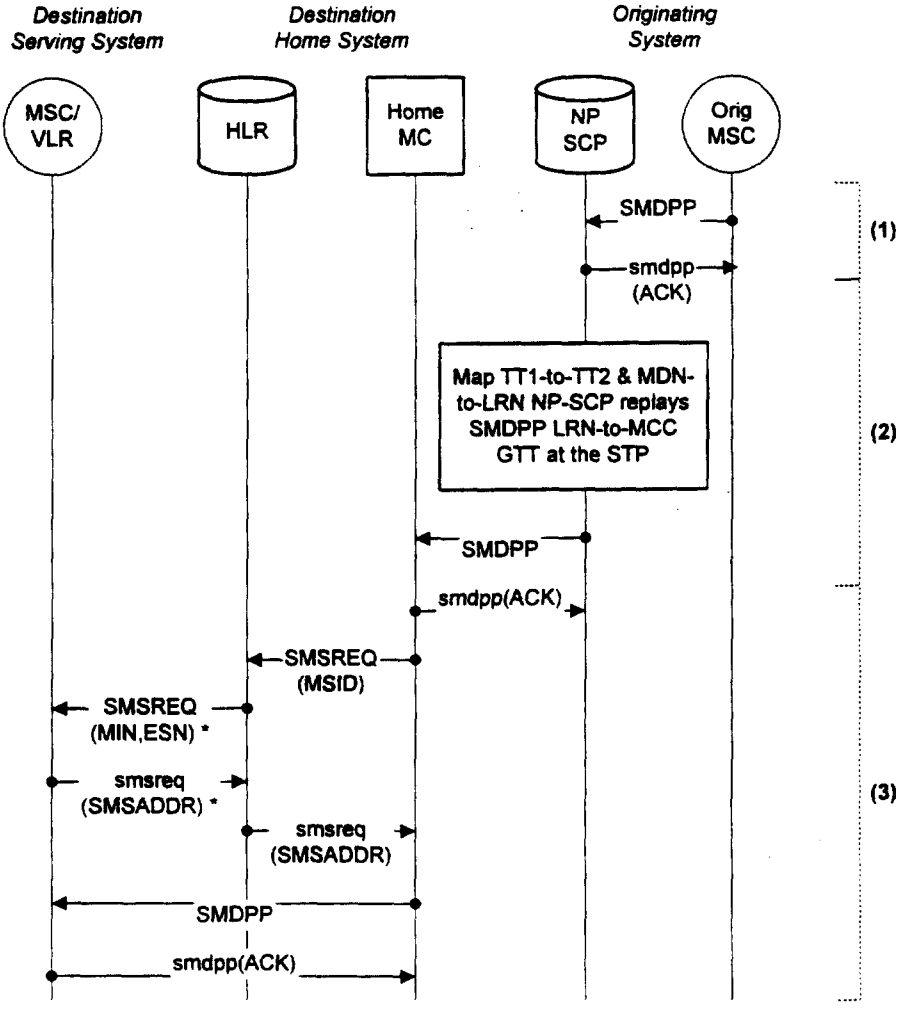

* These messages are sent if the HLR does not hav a current temporary SMS routing address.

The detailed steps are as follows:

(1) The originating MSC or MC routes the SMDPP to the destination MC.

(2) The STP performs a 6-digit MDN-to-NP SCP translation for SMS. When the NP SCP receives the message, it translates the incoming translation type (TT1) to an outgoing translation type (TT2) and maps the MDN to its associated LRN. The NP SCP relays the

short message to the destination MC. Then, the STP performs a 6-digit LRN-to-MC translation to route the message to the destination MC.

(3) When the destination home MC receives the SMDPP request, it delivers the short message following existing procedures.

The advantages of Alternative 5 are as follows:

- Step 2 uses the same 10-digit intermediate GTT at the NP SCP process that the wireline industry is developing/investigating for the support of services such as CLASS, Inter-switch Voice Messaging, Calling Name, and ABS/LIDB.
- The NP SCP does not need to maintain additional routing information for SMS.
- Short messages from other countries will be delivered to the destination home MC using this alternative.
- 10-digit intermediate GTT at the NP SCP is more efficient than querying the NP SCP for the LRN.

The disadvantages of Alternative 5 are as follows:

- The NP SCP needs to the have the capability to perform a 10-digit intermediate GTT at the SCCP level.
- There is a need for two new translation types; one for MDN-to-NP SCP (MC) translation and the other for the LRN-to-MC translation.
- Administration for the point code of MCs used for the LRN-to-MC GTT will be needed.

The following items with regard to Alternative 5 should be further investigated:

- None identified.

4. BUSINESS SYSTEMS, OPERATION SYSTEMS AND BILLING

4.1 Service Order and Provisioning

4.1.1 Process Flow Overview

Figure 4-1 below illustrates the overall information sharing process for portability.[31]

Figure 4-1 Service Order and Provisioning Process Flow

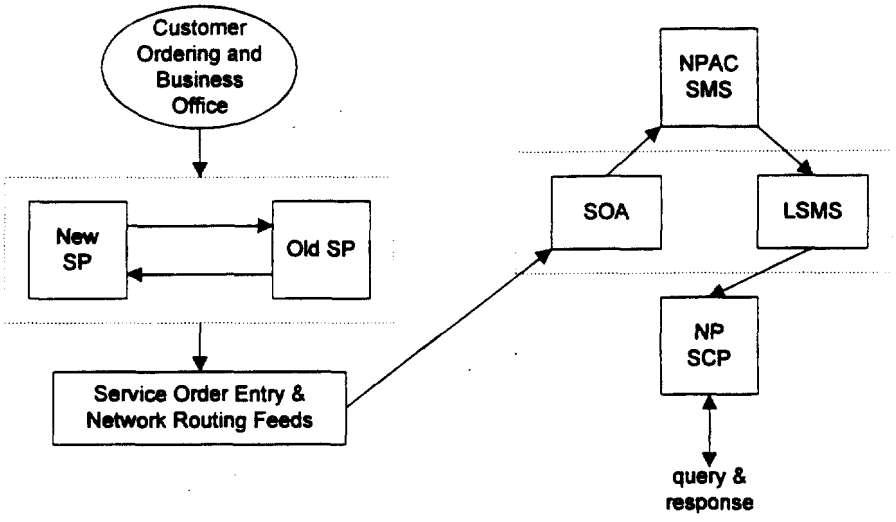

The NPAC-SMS is an administration center developed, owned and operated by a neutral, third party company (i.e., neutral to all telecommunications service providers). It collects and disseminates information that maps ported subscribers to service providers in a geographic area. Presently, seven geographic areas have been agreed upon[32] for covering the United States, with areas roughly corresponding to the state boundaries associated with the seven Regional Bell Operating Companies (RBOC).

The LSMS is logical Operations Systems (OS) function that accepts downloads from the NPAC-SMS and disseminates the data to the NP-SCPs. This logical function could be a stand-alone system on the WSP premise, an application within another OS, or function provided by another company. A WSP can deploy a single LSMS, LSMSs per NPAC-SMS or LSMSs per NP-SCP;

---

31 *North American Numbering Council LNP Architecture and Administrative Plan*, Issue 5, March 4, 1997.

32 ibid.

this deployment will depend upon the WSPs infrastructure. NP-SCP platform deployment, and network coverage area.

The Service Order Activation (SOA) function is similar to the LSMS in that it is a function which ties the NPAC-SMS with the WSPs service order processing systems. As with the LSMS, this function could be a physically separate system or a function within another system.

The interface between the NPAC-SMS and the LSMS is an open interface based upon the Common Management Information Protocol (CMIP). This interface, including the CMIP objects, is currently documented in various locations, mostly on a state or regional basis; and the objects can vary among the NPAC-SMSs. However, the NANC NP Working Group is presently looking into creating a single interface document for all of the regions.

The interface between the NPAC-SMS and the SOA is also a CMIP-based interface and similarly documented.

The interface between the LSMS and the NP-SCP as well as the between the SOA and the WSP's Service Order Entry systems is at the discretion of the WSP.

The processes by which these systems communicate information is discussed below.

4.1.2 Provisioning a Number Block Open for Portability

Once a number block opens for portability, every telecommunications provider within the region serving that block must provision the block as open within its switches. More specifically, a WSP must populate the appropriate number portability tables in the MSC with the open NPA-NXX so that the NP trigger will trigger the query upon detecting that a called party number's NPA-NXX matches this open NPA-NXX. All open blocks served within the region must be provisioned in the MSC. The determination of how many or few open blocks are provisioned in a single MSC is at the discretion of the WSP depending upon the architecture deployed by the WSP balanced with the responsibility of supporting WNP per the FCC order and this document.

The source for open number blocks will be the LERG. The means for notification is still to be determined. The format of the information will be in NPA-NXX blocks.

4.1.3 Notifying the Receipt of a Ported Subscriber

The process of notifying the receipt of a port subscriber involves (a) notifying the NPAC-SMS of the new LRN for the DN so that it can broadcast the new LRN to all SPs within the region, and (b) coordinating the change with the old SP (e.g., service activation, line side provisioning).

A standard process definition is currently being worked by the NANC NP Working Group based upon efforts by various states in defining the flow. This document will not attempt to describe the details of these flows and urges WSPs to review and comment on the work in progress.

The essence of this flow, however, can be described at a high level:

(a) The New SP receives written authorization regarding the subscriber's intention to port.

(b) The New SP communicates the port to the Old SP via an Electronic Data Interchange (EDI) interface.

(c) The Old SP confirms the receipt of notification

(d) The New SP (and optionally the Old SP) notifies the NPAC-SMS of the new LRN for the DN via the SOA.

(e) The New SP and the Old SP coordinate the activation date and line side provisioning (automated and manual processes are being defined).

(f) The subscriber is activated.

(g) The NPAC-SMS downloads the new LRN to all LSMSs. All SPs update their NP-SCPs with the data in the LSMS.

(h) Calls route to the new, ported subscriber per the WNP Solution.

Although simplified, one can realize the complex yet crucial coordination that must occur between two SPs. In fact, the lines of communication (manual and/or electronic) must be established between every SP (wireline and wireless, alike).

4.1.4 Downloading data from the NPAC-SMS

The NPAC-SMS holds the master copy of the mapping from DN to LRNs as it is the center which notifies all SPs of a subscriber's new LRN when the subscriber ports.

The point in the process in which the download occurs can be seen as step (g) above. As with the above process description, many states have documented their defined version of the contents of the NPAC-SMS and the CMIP interface (including objects) between the regional NPAC-SMS and the LSMS. As a result, currently seven versions of the interface exist. However, the NANC NP Working Group has taken on the effort to arrive at a single, standard NPAC-SMS set of objects. WSPs are urged to become involved and comment on these efforts.

Besides downloading the data to the NP-SCP (e.g., DN to LRN mapping), the NPAC-SMS is being designed to have the capability to download the necessary data for the GTT functions required for number portability. More about this download can be found in documents which describe the NPAC-SMS and its interface.

4.1.5 Auditing the NPAC-SMS Data

Along with defining a process by which data is delivered to or received from the NPAC-SMS into an SPs systems, an audit function is being defined to allow for SPs to validate the contents of the database at periodic intervals.

4.2 Number Administration

4.2.1 IMSI, MIN and MDN Administration

MDNs are NANP numbers and should be administered as today's wireless directory numbers are administered today.

IMSIs are assigned by the Bellcore Numbering Consulting Group (NCG) upon carrier request and in accordance with the *IMSI Assignment Guidelines and Procedures*, Version 1, February 12, 1996. For WSPs that choose to deploy IMSI MSIDs, they must plan for and implement an administration process for obtaining, assigning, maintaining, and aging as appropriate IMSIs.

In WNP the assignment and management of MINs as MSIDs is yet to be determined. As with IMSIs, WSPs using MINs as MSIDs must plan for and implement an administration process for obtaining, assigning, maintaining and aging as appropriate MINs. The WNP Solution assumes that the MINs used by WSPs today for dialable numbers will be retained by the WSPs for MSID usage.

4.2.2 Disconnected Numbers

When a wireless subscriber terminates service (i.e. does not port but rather drops service altogether), the WSP may choose to provide intercept treatment. During this period, no changes are indicated to the NPAC-SMS and calls will continue to be routed to the WSP.

During this time, the service provider may offer standard or custom intercept treatment for calls to this number. After the period of providing intercept expires, the serving WSP then notifies the NPAC-SMS that the portable number entry should be removed. The number reverts to the service provider which was allocated the NPA-NXX associated with the freed number.

4.2.3 Location Routing Number Assignments to WSP

In order to receive calls for ported subscribers within a serving area, a WSP needs assigned at least one LRN within that serving area. A WSP may designate a single MSC in the serving area as a single point of entry for incoming calls (e.g., a gateway MSC). In this case, the gateway MSC would require at least one LRN value for other networks to route calls. Once the MSC receives the call; it may invoke existing wireless procedures for obtaining a temporary routing number to complete the call. The MSCs behind the gateway do not require LRNs.

Alternatively, a WSP may choose to allocate at least one LRN for every MSC in the serving area which would result in routing calls to various MSCs and eliminating the concept of a gateway MSC. If multiple MSCs share the same code block (i.e., NPA-NXX), then a unique LRN is needed to identify each MSC. Either method is acceptable and at the discretion of the WSP.

Assigning an LRN to an MSC may require that the MSC be listed in the LERG. A majority of MSCs are currently not LERG-listed. The exact impact requires further study.

4.3 Billing

The impacts and processes regarding billing, including clearinghouse reconciliation, have not been identified at this time for WNP. However, the separation of the MDN and MSID, allowing the MSID to identify the WSP with the first six digits should alleviate some of the impacts to such things as the roaming tables. Additionally, discussions have been held regarding the addition of some billing parameter (probably not dependent on MIN, IMSI, nor MDN and yet to be defined) which might help identify the service provider for the calling record.

5. WIRELESS NUMBER PORTABILITY SYSTEM IMPACTS

This section summarized the anticipated WNP architecture impacts to each of the entities in the network architecture.

Figure 5-1 below maps the components of the wireless number portability building blocks in Figure 2-1 to the wireless NP platforms (e.g., network elements, operations systems). Most platforms map to only one building block; the exception is the MSC as it maps to multiple. The figure also illustrates the recommended modifications related to each platform.

Figure 5-1 Mapping of Platforms to Wireless Number Portability Model

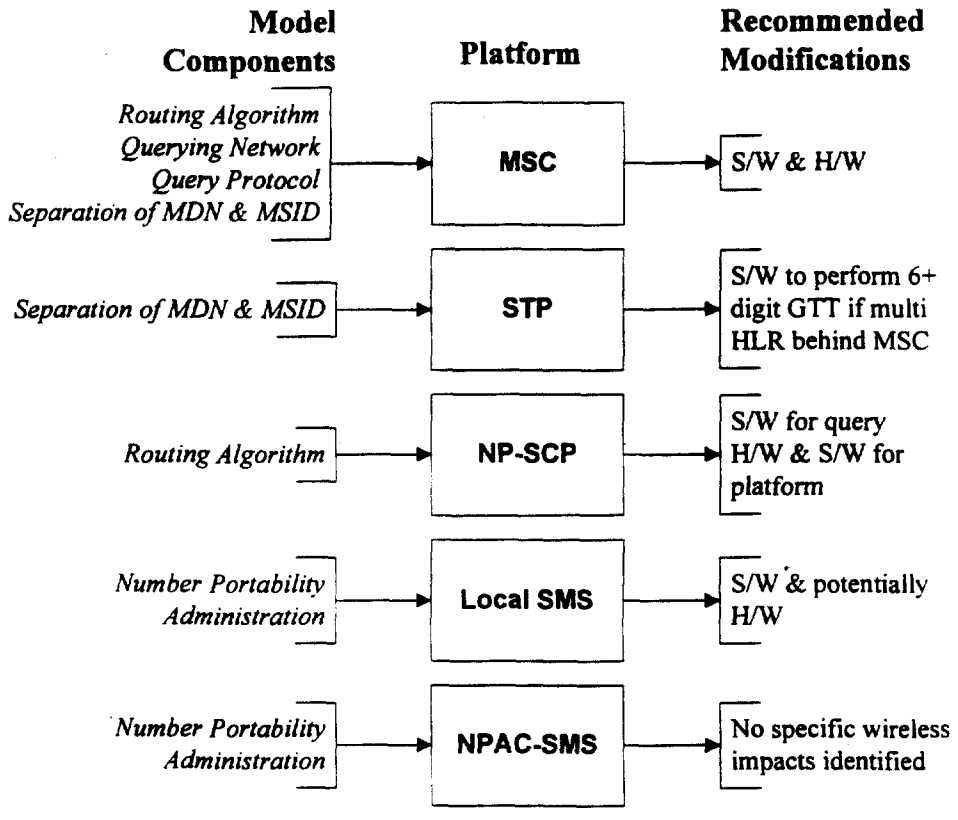

5.1 Impacts to the Mobile Station

The following impacts are anticipated on the MSs:

- Because the solution separates the MSID from the MDN, the MS will need to contain both the MDN and the MSID. This implies both IMSI (if IMSI capable) as well as the MIN (as long as MIN is used as an MSID).
- The MS will register with the IMSI on an IMSI capable network or with the MIN on MIN-capable networks. If the mobile is not IMSI-capable, it will register with MIN on IMSI or MIN networks.
- It will be desirable for the phones to display the MDN or nothing instead of the MSID when the subscriber powers on his/her phone.
- Porting from one SP to another SP may require that the mobile station be reprogrammed with a MIN or an IMSI as appropriate to the recipient provider. The impacts of portability on pseudo-IMSI mobile stations will require further study.

5.2 Impacts to the Air Interfaces

No impacts have been identified for the following air interface protocols: IS-136, IS-95 and GSM.

However, if a provider chooses to implement an IMSI network, the following impacts should be known (and is being worked on by the IS-136 standards committees):

- In the IS-136A standards, if both an IMSI and a MIN are programmed in the mobile, the MIN takes precedence over the IMSI while in the mobile's home country. Therefore, modifications to the standard are required in order to reverse the precedence, allowing IMSI to be the primary identifier in an IMSI-capable network.

5.3 Impacts to IS-41 Signaling

The following impacts to the IS-41 signaling standards are anticipated:

- All IS-41 messages which contain MIN (e.g., Registration Notification) will need to be enhanced to support MSID.
- The contents of the dialed digits parameter in the IS-41 messages (e.g., LocationRequest) will be the MDN instead of the MIN.
- IS-41 will need to be enhanced to support Automatic Code Gap (ACG), particularly to the NP-SCP.
- A query must be defined and documented. This could be either an existing, a modified, or a new IS-41 message.
- The IS-41 Location Request Return Results message should be modified in order to distinguish whether the destination digits are a TLDN or another type of digits (e.g. Call Forwarding digits).

- MIN is currently a mandatory parameter in the SMSREQ message. For SMS in WNP, the appropriate value (for what is a MIN today) will be the MDN. The SMSREQ message should be modified to require the MDN.

5.4 Impacts to GSM Signaling

The GSM signaling modifications to support WNP involve two areas. The first area involves ISUP which should be based on the same modifications adopted for wireline portability. These include the following[33]:

- new FCI bit indication for translated number
- new GAP code point to indicate Called Party Number

The other change involves the Mobile Application Part (MAP) protocol which is a specific type of TCAP protocol. The changes include the following:

- a definition of a query message and response
- incorporation of ACG protocol and procedures

5.5 Impacts to the Home Location Register

The WNP architecture notes the following impacts on the HLR:

- The HLR must provide a mapping between the MSID and the MDN for all subscribers.
- The MDN should be made available to the MSC/VLR at the time of registration for all subscribers.
- If multiple MDNs are used for the same MSID, the HLR must designate one MDN as the preferred MDN for the domestic network.
- The HLR must support any enhancements to the IS-41 (or equivalent) messages required to accommodate MSID, MIN, MDN, and IMSI, as appropriate.

5.6 Impacts to the Mobile Switching Center

The MSC is impacted in multiple areas including registration/validation, call origination, call delivery, roamer tables, digit screening, query capabilities, and others. Some of these items are detailed below.

---

[33] CCPN SS7 network capability in *T1 LB 557 Signaling System Number 7-Number Portability Call Completion to a Portable Number - Integrated Text* currently in ballot to become an American National Standard

To ensure the Calling Number Identification Presentation (CNIP) service continues to deliver the appropriate number to the called party the MSC must populate the calling party number parameter with the MDN in the ISUP IAM.

5.6.1 Registration/Validation

The impacts on the MSC due to the proposed WNP architecture, pertaining to the MS registration and validation, are the following:

- The MSC must support (or at least portions of) IS-41 Revision C (or equivalent) protocol for the Mobile Application Part if the MSC is to perform NP functions.
- The MSC must send the registration request to the HLR requiring GTT of the MSID digits at the STPs.
  - IMSI will use a TT of 9, and MIN will use a TT of 3.
  - IS-41 Revision C must be modified to include the MSID in place of the MIN as a mandatory parameter in the RegistrationNotification message.
- The MSC will receive an HLR response to the registration/validation message which is MTP routed from the HLR. The profile macro in the response message must include the DN of the MS.
- The MSC must be able to differentiate between MSID and MDN and to store them in the call register.

5.6.2 Call Origination

The impacts on the MSC due to the proposed WNP architecture, pertaining to the MS call origination, are the following:

- The originating MSC must populate the CgPN in the ISUP IAM with the MDN. This MDN is obtained from MS's HLR in the response to the registration response.
- The originating MSC must populate the Charge Party Number in the ISUP IAM with the MDN. This DN is obtained from MS's HLR in the response to the registration response.
- If the CdPN belongs to a ported NPA-NXX block, then the following must hold true:
  - The MSC must have a trigger for the NP-SCP query when the MSC determines that the call is intra-LATA and non-local. The MSC will query the NP-SCP using the WNP Query message to obtain the LRN of the entry switch of the ported number.
  - The MSC must be able to interpret the response received from the NP-SCP. The response contains the LRN for ported DNs and the dialed DN for non-ported DNs.

- Upon receiving the LRN, the MSC must send an ISUP IAM message, to the next switch with the *m*th bit set in the FCI, the CdPN set to the retrieved LRN, the CgPN set to the MDN of the calling party, and the GAP parameters set to the dialed DN.

- If the MDN is not ported, the NP-SCP will respond with the CdPN parameter set to the dialed DN in the response message. The MSC must be able to process this message.

- If MSC determines that it is an inter-LATA call, it must route the call to the appropriate IXC for further processing using ISUP or Multi-Frequency (MF) trunk set up messages. The IXC may then perform the query to the NP-SCP.

5.6.3 Call Delivery

The impacts on the MSC due to the proposed WNP architecture, pertaining to the MS call delivery, are the following:

- The MSC must be able to process the IAM parameters, including the FCI *m*th bit and the GAP.
- The MSC pointed to by the LRN (i.e., entry MSC) must recognize the LRN in the CdPN as its own. It must then replace the CdPN value with the GAP value. This new CdPN will then be processed by the MSC as usual.

  The MSC will send a query to its HLR based on the MDN received from the ISUP message. Since the MDN is different from MSID and since multiple HLRs may support be supported at the MSC (for some networks), a special translation of the DN may be needed to locate the HLR.
- When setting up the trunk to the Serving network, the MSC must populate the IAM message with the CdPN equal to the TLDN, the GAP equal to the MDN, and the FCI indicator as set (no query is necessary during this leg of the call).
- If the call is forwarded to another number, the entry MSC must treat the forwarded number as a new dialed number and follow the LRN solution. Thus, if the forwarded number is within a ported range, the MSC will query the NP-SCP to get the LRN of the destination switch.

5.7 Impacts to Interconnection Types

There are two basic types of interconnection used by wireless carriers for interconnecting with the PSTN[34] [35], Type 1 and Type 2. Type 1 and Type 2 trunks can be used for interchanging

[34] EIA/TIA IS-93 *Cellular Radio Telecommunications A_i-D_i Interfaces Standard*

[35] Bellcore GR-145 *Compatibility Information for WSP-LEC Interconnection*

traffic in both directions, i.e. wireless-to-wireline and wireline-to-wireless. A description of these interconnection types and the impacts of WNP follows.

5.7.1 Type 1

Type 1 interconnection is a trunk interconnection between an MSC and a wireline End Office switch and can support interchange of traffic between the MSC and the PSTN. This includes traffic to and from customers served by that Type 1 office, traffic to and from other end offices and MSCs in the local network, and traffic to and from long distance carriers. Type 1 trunks also support interchange of other types of traffic (i.e., ancillary traffic) such as operator services, directory assistance, and emergency service access (i.e., 911).

Since Type 1 trunks are configured as trunks with line treatment (TWLT) at the Type 1 end office, they can only support MF or ISDN access signaling and not SS7 ISUP signaling. Therefore, the substitution of the LRN in the CdPN, and the use of the FCI and GAP parameters proposed in the SS7 ISUP IAM for NP cannot be supported by Type 1 trunks. Consequently, providers using Type 1 trunks for wireless-to-wireline calls following an NP-SCP query by an MSC will lose the benefit of the query.

Type 1 trunks can continue to be used for wireless-to-wireline calls (including wireless-to-wireless via the wireline) in an NP environment in the following instances:

(a) where a WSP establishes a business agreement with the Type 1 service provider to perform the NP queries,

(b) for calls to non-ported NPA-NXXs,

(c) for long distance calls where the IXC, and not the Type 1 service provider, would perform the NP query, and

(d) for ancillary services such as operator services, directory assistance, and emergency service access.

Type 1 trunks can also continue to be used for wireline-to-wireless calls (including wireless-to-wireless via the wireline) in an NP environment where there exist no ported numbers within the entire NPA-NXX in the WSP's Type 1 number range.

If type 1 interconnects are to be replaced with an interconnection type such as type 2A-SS7 to support the LRN call routing method, the MSC will need to be re-homed from the end office to an access tandem.

5.7.2 Type 2

There are multiple Type 2 interconnections, i.e. Type 2A, 2B, 2C & 2D.

- Type 2A interconnection is a trunk interconnection between an MSC and a wireline tandem switch, and can support interchange of traffic between the MSC and the PSTN. This can include traffic to and from end offices and other MSCs served by that Type 2A tandem switch, and traffic to and from long distance carriers if the Type 2A tandem also serves as an access tandem. Type 2A trunks can operate with MF or SS7 ISUP signaling. To support NP, Type 2A trunks must be converted to SS7 ISUP in order to be able to send and receive the LRN in the CdPN, and the FCI and GAP parameters in the SS7 ISUP IAM.
- Type 2B interconnection is a trunk interconnection between an MSC and a wireline end office switch, and can support interchange of traffic between the MSC and only customers served by that Type 2B office. Type 2B trunks can operate with MF or SS7 ISUP signaling and are usually provisioned to allow overflow traffic to route to an associated Type 2A trunk group. To support NP, Type 2B trunks can remain MF as long as none of the NPA-NXXs served by the Type 2B end office or MSC contain any ported numbers. Further, the Type 2B end office and MSC can perform an NP-SCP query with the result indicating that the call should be routed to a Type 2B trunk group. Again, MF signaling can still be used in such cases as long as the Type 2B end office and MSC can retain the LRN for use with the associated Type 2A overflow trunk group, should all of the Type 2B trunks be found busy. Type 2B trunks can be converted to SS7 ISUP and optionally arranged for sending and receiving the LRN in the CdPN, and the FCI and GAP parameters in the SS7 ISUP IAM.

  WSPs can make business arrangements for another provider to query and properly route the call to the ported-to network.
- Type 2C interconnection is a trunk interconnection between an MSC and an E911 tandem for Emergency Service calls. Signaling over Type 2C trunks is not impacted by WNP. Emergency Services feature interactions with WNP are covered in section 3.3.2.
- Type 2D interconnection is a trunk interconnection between an MSC and an Operator Tandem. Signaling over Type 2D trunks is not impacted by WNP. Operator Service feature interactions with WNP are covered in section 3.3.1.

5.8 Impacts to the Signaling Transfer Point

Note: It is recommended that all service providers utilize the GTT capability at their STPs for routing SS7 queries. Although MTP routing capability can be used, it will not be able to utilize all of the performance and administrative benefits of GTT.

The proposed NP architecture will have the following impacts on the STPs in the SS7 backbone network:

- If STP GTT is used, STPs must support a new TT value for routing messages to the WNP query messages to the NP-SCP. Wireless networks, for WNP queries, should use the same TT values as used in the wireline networks. [36]
- The STPs shall perform appropriate SS7 route and SCCP management for routing queries.
- If IMSI is implemented, the STPs must support GTT of IMSI for the new IMSI TT. Although IMSI has 15 digits, the STPs may need to perform GTT only 6-digit GTT on IMSI to locate the home service provider's network. If the home network supports multiple HLRs for the same mobile network code of the IMSI, it may have to perform GTT on greater than 6-digits of the IMSI in order to locate the HLR for the MS. Only the IMSI digits needed to perform GTT are required in the SCCP CdPA. The complete IMSI value used by the end application should be provided in the TCAP.
- STPs must have route-sets defined for every possible destination network with which the service provider has a roaming agreement.
- STPs should be able to support DN-to-HLR routing translation based on a new intra-network TT yet to be defined.
- STPs will perform Intermediate GTT (IGTT) for messages to remote network nodes and Final GTT (FGTT) for routing to the local network nodes.

5.9 Impacts to Global Title Translation

The impacts below apply to the location of GTT databases within a network. These impacts only apply to networks that plan to use GTT for the routing and management of query messages.

- The NP-GTT database is a six-digit GTT database located on the STP.
- It is perceived that MSID GTTs are STP based and are not impacted by number portability.
- MDN GTTs for inter-network service and capabilities are the most impacted in a number portability environment. Much discussion has occurred on whether to locate the MDN-GTT database on the STP or on the NP-SCP. Regardless of location, MDN-GTTs may require interrogation of the TCAP portion of the message to complete the GTT lookup. A local SMS interface may be beneficial depending on the volume of updates received. The local SMS would provide updates for ported numbers. It is up to each service provider to update their default GTT databases for each inter-network service via existing service provider procedures.
- MDN-GTTs and the associated TCAP interrogation may be provided on STPs. The STPs provide GTT load sharing of queries to application SCPs and STPs. The STPs

[36] A current move is underway to have separate NP TTs for each protocol as opposed to one TT for all three (i.e., AIN, IN, and WIN).

provide SCCP management in the case of application failures. Service providers need to ensure correct and timely provisioning to avoid circular routing conditions between STPs performing GTT.

- MDN-GTTs on the SCP and the associated TCAP interrogation may be provided on NP-SCP (or other SCP) platform. The NP-SCPs should provide load sharing of queries to application SCPs and Gateway STPs as necessary. The SCPs should also provide SCCP management in the case of application failures. Service providers need to ensure correct and timely provisioning to avoid circular routing conditions between STPs performing GTT and between STPs and SCPs performing GTT.
- MDN-GTTs on the SCP require a six-digit GTT database on the STP for each GTT database located on the SCP. This service provider managed database is used by the STP to locate the SCP performing the ten-digit GTT.

  Another option is to follow a capability being studied by some land-line service providers. This is a capability where the NP-SCP changes the TT value and CdPA of GTT messages. This scenario requires a six-digit GTT at the STP, a ten-digit GTT at the NP-SCP where a second TT value is reassigned and the changing of the CdPA to the LRN. A service provider that receives these messages from another network is required to support the new TT value and service based LRN database. Each receiving network is required to have and maintain this database for this scenario to be successful.

5.10 Impacts to the Number Portability Service Control Point

The WNP solution will have the following impacts on the NP-SCP (some of which are already known in the LRN solution):

- The NP-SCP must support WNP query messages from wireless network and a response message including the LRN of the ported subscriber's MSC.
- NP-SCPs should be deployed with redundant replicates for total availability. This will require synchronization of the data in all replicated units to be provided by a centralized service management system.
- NP-SCPs should comply with Bellcore GR-1280-CORE, AIN SCP Generic Requirements, Section 11. Requirement 11-4 demands that the Mean Response Time at the rated transaction load be 100 ms or less, and the 95% response time be 120 ms or less.
- The NP-SCP should implement congestion control and indicate such a condition to MSCs via ACG as to defined by IS-41 and/or GSM standards.

5.11 Impacts to Customer Care and Provisioning

The following list describes the potential impact of NP on customer care and provisioning systems, depending upon a service provider's infrastructure: