For completeness, the figure includes elements not directly involved in call processing, namely the NPAC-SMS and the LSMS.

2.3 Separation of the Mobile Directory Number from the Mobile Station Identifier

Prior to number portability, AMPS, CDMA and TDMA service providers performed registration, call processing, provisioning, customer care, and billing are based upon a single number for the subscriber - the Mobile Identification Number (MIN).

If today's MIN was portable, either a 10-digit Global Title Translation (GTT) or an NP-SCP dip would be required in order to locate the home network of the subscriber.[22] Neither of these alternatives is desirable. A dip during registration would increase the query rate on the NP-SCPs, and not all WSPs are equipped to perform 10-digit GTT in the time frame required.

In WNP, mobile stations will possess two types of numbers: a Mobile Station Identifier (MSID) and a Mobile Directory Number (MDN). The MDN will be a dialable NANP directory number, in the NANP format and will be the portable number. The MSID will be either an E.212 IMSI[23] and/or a NANP-like MIN and will not be portable.

With the introduction of number portability, existing TDMA and CDMA subscribers not yet ported will have two numbers (the MDN and the MSID) though both most likely equal to the existing MIN. When the subscriber ports, the MDN and MSID become separate and distinct. The ported subscriber will surrender the MSID to the donor network and receive a new MSID from the recipient network. The ported subscriber's MDN will remain unchanged. The donor network can then freely use this MSID for a new subscriber. It is possible that the same number may be used for an MDN in one network and an MSID (as a MIN) in another network. No adverse impacts because of this situation, however, have been identified

The GSM standards presently account for separate numbers: an E.212 IMSI for identifying the mobile station and an E.164number for dialing the mobile station.

Using an IMSI as the standard mobile station identifier was established as a goal of the wireless industry before the introduction of number portability. Because of this, the CDMA and TDMA standards allow for E.212 IMSIs in all mobile stations. Therefore, many CDMA and TDMA carriers may take advantage of the implementation of WNP to introduce IMSIs. However, the entire wireless industry may not flash cut to IMSI.

The industry must support MSIDs in IMSI and in MIN formats. This requires the following:

---

[22] Refer to CTIA RFI Open Forum submitted responses

[23] *International Mobile Station Identity (IMSI) Assignment Guidelines and Procedures*, Prepared by a Wireless Industry Forum, Sponsored by CTIA and PCIA, Version 1, February 12, 1996.

- IMSI-capable networks and IMSI-capable mobile stations must be capable of supporting both IMSI and MIN MSIDs in order to continue to roam on non-IMSI-capable networks.
- Administration of MINs as MSIDs must be addressed (outside the scope of this document).

Variations and implementations of IMSI are being addressed in other forums and are not in the scope of WNP as long as the first six digits of the identifier can be used to ascertain the home network.

2.4 Global Title Translation for Number Portability

In addition to currently defined uses, Signaling System 7 (SS7) GTT may be used to support routing for the WNP query and for other services impacted by number portability. A 6-digit GTT is recommended in the WNP environment for delivery of the LRN query to the NP-SCP. If a WSP does not have GTT capabilities, direct MTP routing to the NP-SCP to obtain the LRN may be used.

GTT may be used to route messages for various services to the appropriate network element (e.g., recipient switch) when an NPA-NXX of a dialed number no longer uniquely identified the targeted network element. To support SS7 inter-system message for such services as CLASS, LIDB, or CNAM, GTT must be available somewhere within the service provider's network (or extended network relying on another provider for portability).

3. THE WNP NETWORK REFERENCE MODEL AND PROCEDURES

This section discusses the necessary wireless architecture (Section 3.1) and the feature interactions (Section 3.3) necessary to support WNP. Section 3.2 illustrates the various call routing scenarios via information flow diagrams. Section 3.4 presents some performance considerations.

3.1 Network Configuration

Figure 3-1 illustrates the network entities involved in wireless number portability. Specifically, this reference model only depicts those entities which are impacted by number portability; other entities might exist in wireless networks but may not be directly impacted and therefore, are not included. Other features and services (e.g., Voice Mail) that are not implemented in a standard manner must be studied by each WSP independent of this effort.

Figure 3-1 WNP Network Reference Model

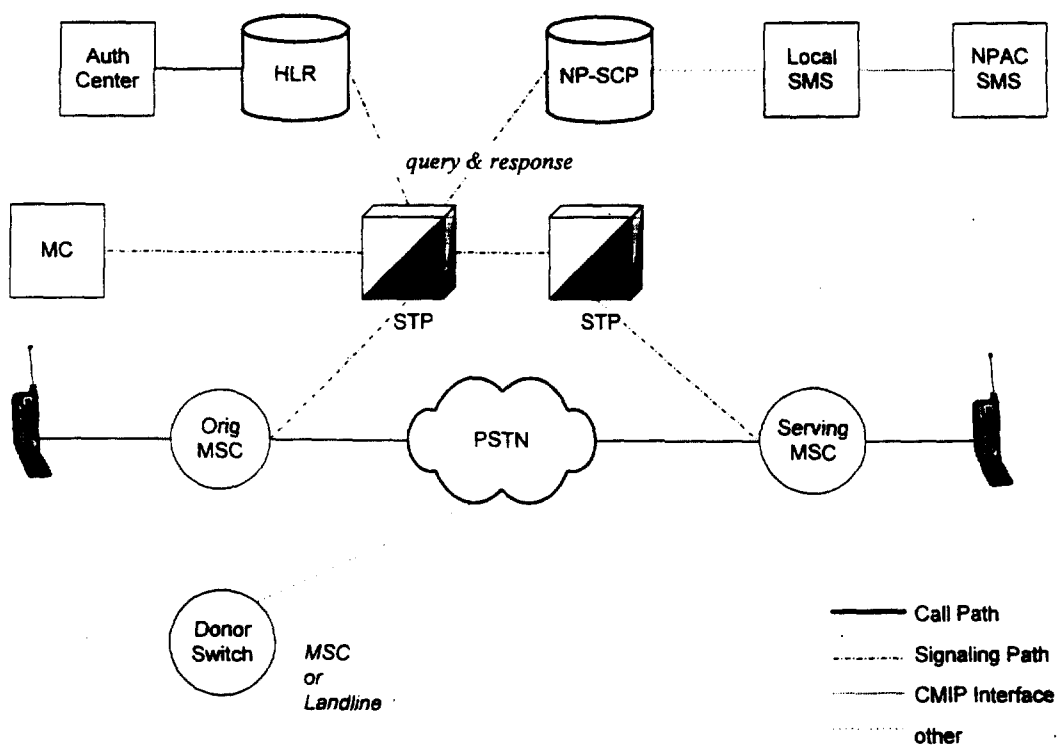

The sub-sections following this figure explain the details of the WNP solution, including a description of each of the elements and the signaling between each of the elements. Although

the NPAC-SMS and LSMS are included, Section 4 presents a detailed description of the service management and operating infrastructure.

3.1.1 Number Portability Service Control Point

The NP-SCP is the database accessed in real time by the switches to provide the LRN value for a ported subscriber in order to correctly route a call. It contains the number portability information originally transmitted by the NPAC-SMS via the LSMS. Each service provider will either own or have access to an NP-SCP that will include the mapping of ported 10-digit DNs to their associated LRNs.

The WNP solution presumes, at present, the following data elements, at a minimum, must exist in each NP-SCP to support routing calls to ported numbers:

- Directory Number
- Location Routing Number

This document later suggests that MSID might be necessary for the support of Short Message Services (SMS) in number portability. Reference Section 3.3.5 for more details.

3.1.2 Mobile Switching Centers

An MSC is a wireless switch. Besides call routing, an MSC typically maintains the Visitor Location Register (VLR). In addition, depending upon the WSPs chosen architecture, the MSC might keep the Home Location Register (HLR). Some providers deploy remoted HLRs; others deploy HLRs integrated with the MSC.

The WNP Network Reference Model depicts three types of MSCs: Originating, Donor, and Serving. The Donor MSC is defined in Section 1.3. The Serving MSC is the MSC with which the subscriber is currently registered. Although not shown on the model, a Home MSC is the MSC which maintains the NPA-NXX relative to the subscriber's number. If the subscriber is registered "at home," the Home and Serving MSC are one in the same. If the subscriber is roaming, the Home MSC routes the call to the appropriate Serving MSC. Relating to WNP, routing by the LRN might take the call to the Home MSC. Routing from the Home MSC to the Serving MSC is a standard component of wireless architecture independent of number portability.

Routing within the subscriber's service provider network is at the discretion of each individual service provider. For example, a service provider may elect to deploy a single national or several regional 'gateway' MSCs. With the regional gateway architecture, all inbound calls to the service provider's subscribers would be routed by the PSTN to one of these 'gateway' switches. The service provider would then use internal logic to get the call routed to the appropriate subscriber. This type of architecture is supported by the WNP solution and should have no impact on the other service provider networks.

The MSC will need to have the capability to identify an NPA-NXX as being portable (i.e., contains ported numbers) in order to recognize the need for an NP query. An industry agreement is moving forward to add a portability flag to the Local Exchange Routing Guide (LERG).

Current roamer tables will continue to be valid for MINs but will no longer be valid for MDNs. Roamer tables should operate on MSIDs, whether MIN or IMSI.

The signaling for call connection to and from an MSC is discussed in Section 3.1.6, and the signaling for query from the MSC to the NP-SCP is discussed in Section 3.1.7.

3.1.3 Signaling Transfer Points

The STP provides SS7 signaling between the network elements per the reference model in Figure 3-1. The STP also provides the Signaling Connection Control Part (SCCP) signaling message translation and routing function. For number portability, the STP SCCP function determines the location of the NP-SCP and forwards the query. The query response message from the NP-SCP is returned via the STP.

3.1.4 Signaling

ISUP signaling is currently being enhanced to communicate NP query indicator and associated call routing information to the downstream networks.[24] The WNP solution is consistent with the wireline NP solution with regard to the necessary enhancements to the IAM message and therefore, with the Call Completion to a Ported Number (CCPN) enhancements. While this document specifies ISUP for number portability signaling, it recognizes networks which will use MF signaling or rely on third party networks. Both the ISUP and MF trunk signaling are discussed below.

3.1.4.1 ISUP signaling

The LRN approach requires additional signaling information for communicating the query status and routing information necessary for the establishment of call connections to a ported number. Call connections are made using the LRN of the home (recipient) MSC. The query indicator is needed to prevent subsequent switches in the call path from making unnecessary database dips. Finally, the serving switch also needs the dialed number for call termination. ISUP signaling ensures that the necessary additional signaling information will be available to the home MSC.

To explain in more detail, after the MSC queries the NP-SCP for a call initiation to a ported number and the MSC is ready to establish the call connection, an IAM is formulated with the enhancements documented in Table 3-1.

---

[24] CCPN SS7 network capability in *T1 LB 557 Signaling System Number 7-Number Portability Call Completion to a Portable Number - Integrated Text* currently in ballot to become an American National Standard

Table 3-1 ISUP IAM Parameter Settings

IAM Parameters [25]	*Ported Not Dipped*	*Ported Dipped*	*Not Ported Dipped*	*Not Ported Not Dipped*
Called Party Number (CdPN)	dialed DN	LRN	dialed DN	dialed DN
Generic Address Parameter (GAP)	n/a	dialed DN	n/a	n/a
Forward Call Indicator (*FCI*)	FALSE	TRUE	TRUE	FALSE

(Note: This table only includes those parameters affected by NP.)

If the calling party is a mobile station, the Calling Party Number (CgPN) must be populated with the MDN of the originating mobile station. If the subsequent switch does not support ISUP enhancements, then the GAP and FCI parameters are not applicable and should not be populated.

A subsequent switch upon detecting the FCI as set for "translated number" should not perform an NP query. If the FCI is not set, a subsequent switch may query the NP-SCP. Some wireless service providers may arrange for another network (via business agreements) to perform the NP query. In this case, the switch routes the call to the aiding network where the NP query is launched. After this switch performs the database dip, it formulates the IAM message with the dipped settings and routes the call as appropriate.

The home MSC recognizes that it serves the dialed ported number by knowing the LRN in the CdPN is its own LRN. Upon this recognition, it retrieves the dialed number from the GAP parameter. If the dialed number has not been ported but is within a portable number block, the MSC can determine that it is the home MSC by recognizing that the FCI is set and it serves the dialed DN in the CdPN parameters. The home MSC will use the dialed number to terminate the call.

When a donor switch receives an IAM with the FCI not set, it should perform the NP query and route the call to the appropriate switch. Such might the case if there has been some network failure.

Another IAM parameter being discussed in conjunction with wireline number portability (yet not included in the table above) is the Jurisdiction Information Parameter (JIP).[26] The JIP is an optional parameter in the ISUP standard. The WNP Solution is not advocating nor opposing the population of this parameter in the outgoing IAM at this time.

---

[25] CCPN SS7 network capability in *T1 LB 557 Signaling System Number 7-Number Portability Call Completion to a Portable Number - Integrated Text* currently in ballot to become an American National Standard

[26] *Generic Switching and Signaling Requirements for Number Portability*, Illinois Number Portability Workshop, Generic Requirements Issue 1.04, January 20, 1997.

3.1.4.2 ISUP Signaling with MF Signaling to the Home MSC

When ISUP signaling is available throughout the call path except at the final trunk MF signaling, the switch interworking ISUP and MF signaling will need additional capabilities. The interworking switch must locate the destination switch using the CdPN in the incoming IAM, and then extract the dialed ported number and use it as the called party address in signaling the destination switch. A destination switch must recognize that it is the home switch of the dialed ported number. It will terminate the call using the called party address.

3.1.4.3 ISUP and MF Signaling Interworking

Call paths that contain a mixture of ISUP and MF signaling are inefficient. After a switch obtains the LRN from the NP-SCP, for example, it formulates an IAM message. When the IAM arrives at an interworking switch that switch can only signal the dialed number to the next switch using MF signaling. The switch after the interworking switch may have to perform a redundant NP query to determine how to route the call. A mixture of ISUP and MF signaling in the call path will require multiple LNP queries to route the call to the serving switch.

3.1.5 WNP Trigger and Query Types

Triggers and queries are tightly coupled with intelligent network architectures for the deployment of advanced services. Such architectures include the following:

- Intelligent Network (IN)
- Advanced Intelligent Network (AIN)
- Wireless Intelligent Network (WIN)

Each of these intelligent network architecture utilities specific query protocols and procedures, terminology, and capability subsets. The WNP solution, however, recognizes that, prior to the implementation of any of these architecture, specialized trigger and query development may be required. This document recognizes that WSPs will have different implementation needs and that various standards bodies (e.g., T1P1, TR45.2) have a challenge to arriving at the standard trigger and query message (e.g., prior to WIN definition). These qualifiers will become more evident in the following subsections.

3.1.5.1 Trigger Type

Triggers expand basic call handling by allowing additional procedures to be defined and controlled by an external entity. The additional procedures are defined so that when certain conditions are met, the trigger is invoked. A common result of the trigger processing is initiating a specific TCAP query to an external element for information or instructions on how to proceed.

A trigger must be defined and implemented in the MSC in order to launch the query to the NP-SCP for number portability. However, the trigger is not dependent on the introduction of any

specific intelligent network architecture. Thus, the WNP solution does not specify requirements that any of the intelligent network architectures must be utilized or deployed, nor does it prohibit the use of any. WSPs can implement what is appropriate to their network.

This trigger involves the determination of which calls result in NP queries. It will be a conditional trigger based upon 3 to 10 digits of the dialed number and will be administered at the MSC. If defined in relation to other non-WNP triggers, the trigger for WNP should generally be the lowest priority of all of the dialed number triggers.

Services that involve persistent transactions[27] may be impacted with the implementation of WNP. A WNP trigger may be encountered in some persistent transactions. If the persistent transaction must be closed before an WNP query to the NP-SCP can be launched, these services may not function properly.

3.1.5.2 Query Type

The WNP query is a TCAP message sent to the NP-SCP as initiated by the WNP trigger discussed above. Upon satisfying all of the trigger conditions, the MSC sends the query with the 10-digit DN. If the number is ported, the NP-SCP responds with an LRN for that DN. If the number is not ported, the NP-SCP typically responds with the DN.

Various intelligent network architectures offer different query message types for communication between the switch and the database. Also, WSPs can choose to implement any of the protocols suitable to their networks and their chosen NP-SCP platform. WNP does not pose any requirements as to a specific query type.

The following is an overview of the options:

- *IN-based Protocol*: The switch initiates a "Instruction Start" message and awaits the "Control Connect" response. The IN based protocol is implemented in wireline portability and is anticipated to accommodate WNP without modifications.
- *AIN-based Protocol:* The switch initiates a "Info Analyzed" message and awaits the "Analyze Route" response. The query message indicates the CdPN as well as the Calling Party Number (CgPN) and bearer capability (e.g., the call type is voice). Though the latter two parameters are not required for portability, they are mandatory in the "Info Analyzed" message.
- *WIN-based Protocol:* A WIN-based protocol could be defined for querying the NP-SCP. It would include the DN and would be capable of returning the LRN, at a minimum. WIN, however, is an intelligent architecture currently being defined. The

[27] A persistent transaction is an intelligent network process that is maintained after the initial message exchange. An example might be the Auto Redial service which can be invoked after encountering a busy signal to monitor the busy line and receive a call back when the line is available.

WNP query will be required in advance of WIN incorporation in standards. Therefore, the WNP query may or may not be WIN-based.

- *Other*: A message could be defined outside of the other three call models; for example, an IS-41 message might be defined. Also, a GSM message must be defined, and it may or may not fall within any of the above call models.

3.1.5.3 Automatic Code Gap

The MSCs are not typically equipped with Automatic Code Gap[28] (ACG) capabilities as they do not normally trigger an SCP (in today's wireless environment). However, NP-SCPs are required to support mechanisms to control overload situations via ACG. ACG Indicators parameter of TCAP indicates the cause for applying an ACG control, the time duration for the ACG control to be in effect and the time interval (gap) between ACG application Consequently, MSCs should recognize and react appropriately to such indications in the TCAP message from the NP-SCP.

As ACG is mainly being suggested so that a WSPs can query an SCP also serving a wireline provider and deployed in a wireline environment, the WNP Solution suggests that the ACG implemented for the wireless query be in line with the wireline ACG standards and requirements for Number Portability.

3.1.6 Trigger Conditions

The trigger should activate if the NPA-NXX of the CdPN matches an NPA-NXX open for portability within the region served by the MSC (as provisioned in the MSC NP routing tables).[29] A WSP might also, however, provision the MSC to activate the trigger based upon other conditions (e.g., interconnection agreements). An MSC need not perform a query if the Called Party Number is served by the MSC itself.

3.1.7 Global Title Translation

GTTs are used in the WNP environment, based on the DN, the MIN, and the IMSI. The following text describes some of the GTTs available. The need for new translation type assignments will be identified as part of the NP standards process. This section defines and categorizes the possible GTT uses in the WNP environment. It is not a specific request for new translation type assignments.

---

[28] ACG is sometimes referred to as Automatic Call Gapping, however the TCAP standards terminology for the control is Automatic Code Gap.

[29] This condition rules out querying on operator services calls and N11 (e.g., 911 calls) as is appropriate.

3.1.7.1 Number Portability Global Title Translation

NP GTTs are 6-digit GTTs used to direct WNP query messages to the NP-SCP to obtain the LRN routing information. The SCCP Called Party Address (CdPA) of NP GTTs contains the first six digits of the dialed DN. The wireline industry is pursuing the idea of a separate TT value for each protocol versus one TT value for all three (i.e., AIN, IN. and WIN). Separate TT values would allow the GTT function to provide a separate subsystem number (SSN) for each protocol. If just one TT value is used for all protocols, the NP-SCP must then determine the type of protocol as part of TCAP processing.

3.1.7.2 Mobile Station Identifier Global Title Translations

MSID GTT messages, if identified, contain the MSID in SCCP CdPA. They are used to perform GTT for MSID-based inter-network capabilities and services. Four GTTs are needed for MSID:

- six digits of the MIN to locate the HLR
- six digits of the MIN to locate the Message Center
- six digits of the IMSI to locate the HLR
- six digits of the IMSI to locate the Message Center

3.1.7.3 Mobile Directory Number Global Title Translations

Most GTTs in the past have been based on the MIN. However, with the separation of the MSID and MDN, GTT based on MDN may be needed to achieve this past functionality. MDN GTT messages, if needed, contain the MDN in the CdPA. They are used to perform GTT for MDN-based network capabilities and services. There are significant GTT impacts for MDN based activities that only provide the first six digits of the MDN in the CdPA. The impacts are because the previously used six digit numbering schemes no longer provide sufficient addressing granularity in a number portability environment. When a customer ports to a new service provider, a 10-digit GTT entry is needed in each inter-network service GTT database so that queries are delivered to the appropriate network. In these cases, inter-network service GTT databases will have 10-digit GTT entries and 6-digit default entries. The 10-digit GTT entries of the GTT database are the numbers ported to a new service provider in the served portability area that require inter-network service. When a 10-digit GTT entry for a ported subscriber is not found, the 6-digit default GTT is interrogated to obtain the necessary routing information.

Two solutions are available to address service GTTs. The first modifies all query originating applications to provide ten digits in the CdPA for GTT. This solution is not preferred by the wireline industry due to the update expense of the originating offices. The second solution, called TCAP-GTT, is used when only six digits are available in the CdPA. TCAP-GTT performs GTT by obtaining the MDN (or dialed digits) from the TCAP portion of the message. Note that this case requires a ten-digit MDN (or dialed digits) in the TCAP portion of the message. In most cases, this information is available. Normal SCCP error procedures should be invoked if the GTT fails, even if the failure occurred during TCAP interrogation.

3.1.7.4 Wireline Service Global Title Translations

Wireline Service GTTs for services sent to or received from wireline networks may be needed in wireless networks. These GTTs require 10-digit translation in order to determine the appropriate destination where the query is to be sent. Impacts to these GTT database are the same as described in Section 3.1.7.3 above.

3.1.8 Home Location Register and Authentication Center

The Home Location Register (HLR) is a standard function of wireless signaling and mobility management. The WNP solution presumes the HLR to serve the same function. The HLR holds the subscriber profile which should be capable of separating and mapping the MDN to the MSID.

The Authentication Center is also a standard function in wireless telecommunications. The separation of the MSID and the MDN may impact the AC and its associated authentication formulas; the signaling between the HLR and the AC, however, is not likely to be impacted by WNP

3.1.8.1 Directory Number to HLR Mapping

When a Location Request message is routed to the home network, the network must route the Location Request message to the subscriber's HLR. Some networks have stand-alone HLRs separate from the MSC; some networks have multiple HLRs.

HLR subscriber profiles are typically arranged and indexed by MSID. However, the home network may only have the subscriber's MDN to use for routing the Location Request message to the HLR serving the subscriber. Service providers that employ stand-alone HLRs or have multiple HLRs supported an MSC need to ensure that the Location Request message is routed to the correct HLR for the subscriber. This scenario is further complicated if a WSP deploys an MSC gateway architecture.

Service providers can implement a Location Request routing method that is effective in their internal network.

3.1.9 Abnormal Procedures

A number of situations exists where a call requires WNP processing but a failure prevents the switch from receiving an LRN for routing the call. Such instances include

- signaling link failure,
- NP-SCP outage or overload,
- WNP query timer expire, or

- incorrect STP translation.

Regardless of the cause, the MSC should route the call as if the dialed directory number were not in an open portable block. Specifically, the FCI bit in the IAM message should not be set and the CdPN parameter should contain the dialed DN.

This procedure of routing the call as if it were not ported is called "default routing" and ensures that additional attempts will be made to complete the call. With default routing, a chance exists that the call might route to the donor network. The donor network should attempt to perform the query and re-route the call to the correct service provider.

3.2 Call Flows

The call flows in this section are included to illustrate the inter-workings of the above network architecture. They are based on IS-41 but are not meant to preclude GSM based protocols. The messages are meant to convey the required function and are not necessarily the actual messages defined in the protocol. Furthermore, the call flows do not represent all the information that is conveyed in each instance, only that pertinent to number portability. The call flows are based on normal procedures and do not include error conditions.

3.2.1 Registration and Authentication

Because of the separation of the MDN and the MSID, the process of registration and authentication remains unchanged in WNP. Therefore, no call flow for registration and authentication has been included.

The information exchange, however, is impacted. When the mobile registers, it will pass the MSID Upon receiving an MSID in the registration notification message, the HLR shall include the MDN of the mobile subscriber in the registration notification response message. This will provide the MDN to the Serving MSC/VLR for subsequent call processing.

3.2.2 *Call Routing To a Ported Directory Number*

Wireless call routing can be divided into three scenarios: Land-to-Mobile, Mobile-to-Land, and Mobile-to-Mobile.

3.2.2.1 The Landline-to-Mobile Call

Figure 3-2 illustrates a landline call to a ported mobile subscriber. Text follows the figure for an explanation of each step.

Figure 3-2 Landline to Mobile Call Flow

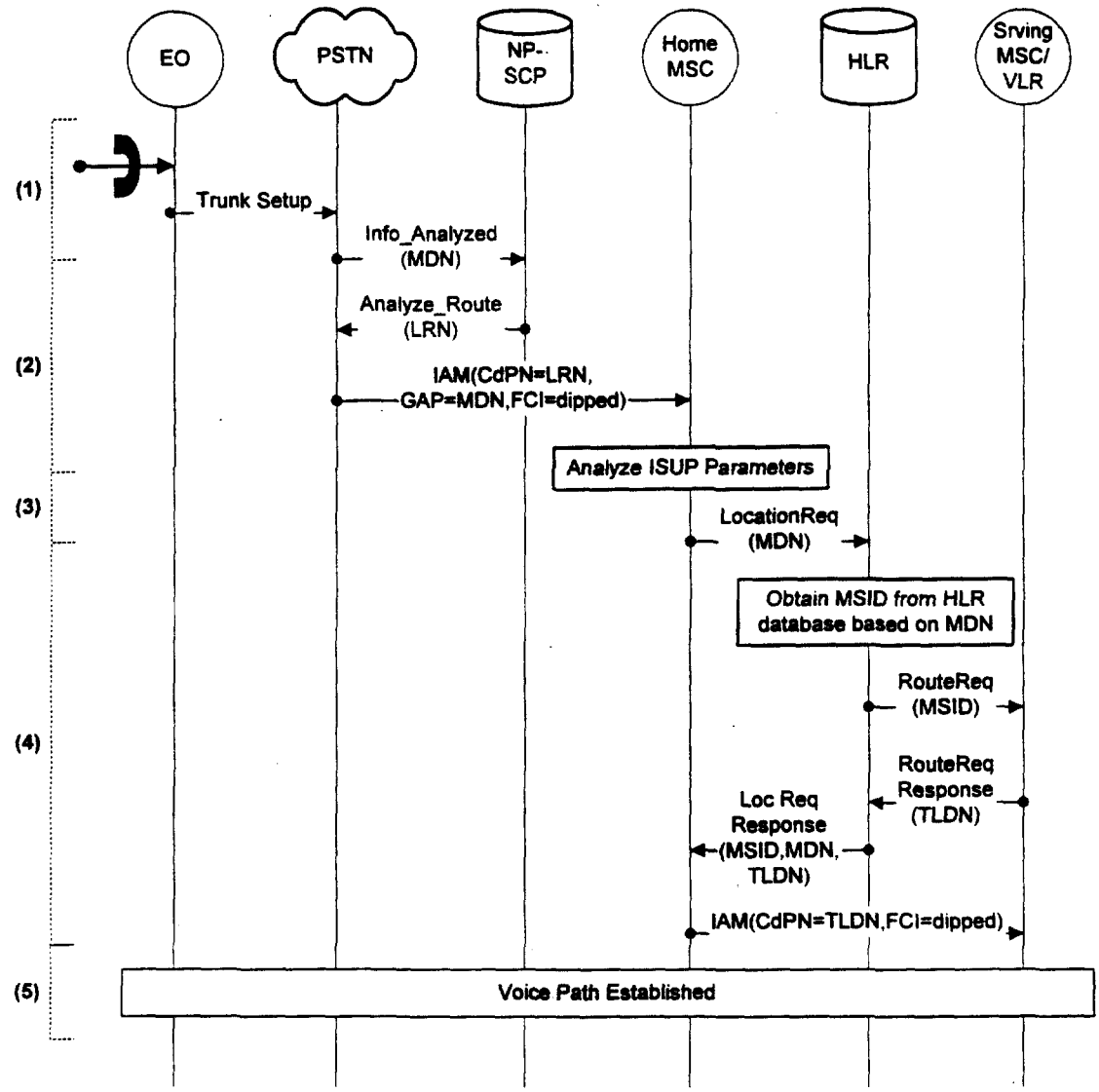

Associated Call Flow Description:

(1) A landline phone originates a call.

(2) A landline switch queries the NP-SCP, obtains the LRN for the ported MDN, and uses the LRN to route to the Home MSC.

(3) Upon receipt of the IAM message, the MSC performs the following analysis:

(a) It confirms that the CdPN belongs to its own network.

(b) It checks the FCI mth bit for the NP-SCP dip indication. If the mth bit is not set, then the call flow skips to step 4. If the mth bit is set, but no GAP is included, the call flow skips to step 4. If the mth bit is set and the GAP is included, the MSC uses the value in the GAP parameter as the CdPN.

(4) The MSC now attempts to locate and deliver the call to the mobile using existing call delivery procedures with the following highlights:

- The Location Request Return Result should include the MSID.
- The final trunk setup IAM message should ensure that a query is not necessary on a TLDN by setting the FCI query indicator.
- If the MSC cannot distinguish between TLDN digits and Call Forwarding digits, the MSC, in attempting to route out the call, may activate the WNP trigger and unnecessarily query the NP-SCP. This document recommends that IS-41 provide the means to indicate type of digits so that, at a minimum, the MSC can know to set FCI bit as appropriate so that an unnecessary dip does not occur in the PSTN during final trunk setup.

(5) The mobile station answers the call and the voice path is established.

3.2.2.2 The Landline-to-Mobile Call with Call Forwarding interaction

Figure 3-3 illustrates a landline call to a ported mobile subscriber. This call flow, however, depicts the subsequent leg of the call when the call is forwarded, for example, to a voice mail system. Specifically, this call flow illustrates only one example of redirection, Call Forwarding No Answer (CFNA). Text follows the figure for an explanation of each step.

Figure 3-3 Landline to Mobile with CFNA Interaction

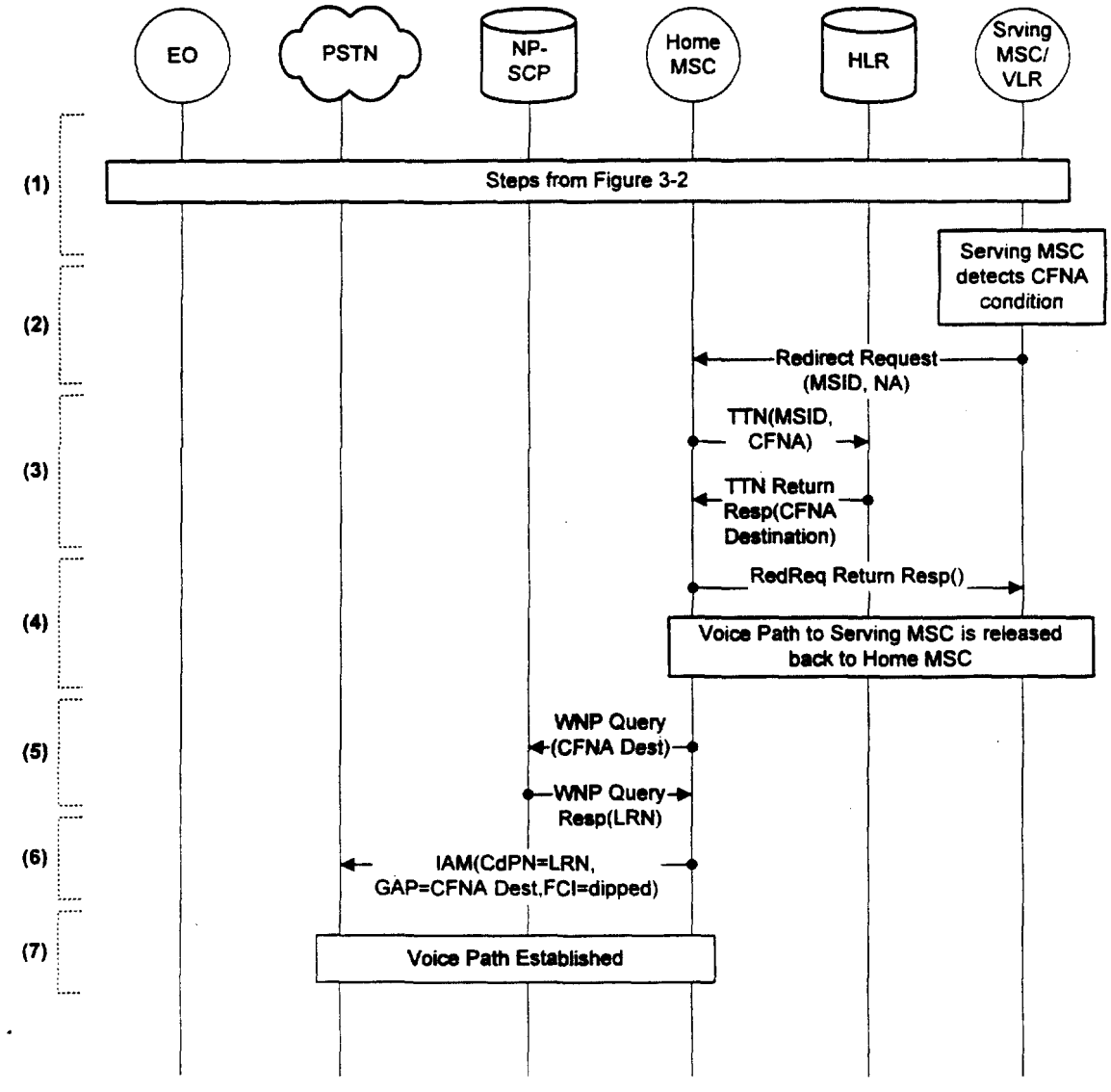

Associated Call Flow Description:

(1) A landline phone originates a call. The processing to establish the voice path to the serving MSC is identical to the call flow in Figure 3-2 and is, therefore, not repeated here.

(2) The Serving MSC detects a No Answer (NA) condition and send a Redirection Request message to the Home MSC indicating the reason (NA) for the redirection request.

(3) The Home MSC sends a Transfer-to-Number Invoke to the subscriber's HLR and forwards the NA indicator. The HLR determines if the subscriber has the CFNA feature authorized and active. If the CFNA feature is authorized and active the HLR sends a Transfer-to-Number return result message back to the Home MSC with the CFNA destination digits included.

(4) The Home MSC sends a Redirection Request Return Result message to the Serving MSC, and the voice connection between the Home MSC and the S-MSC is released.

(5) The CFNA destination digits are analyzed in the Home MSC to determine if a query should be made on the destination digits. The query returns the LRN.

(6) The Home MSC formulates the IAM message with the CdPN equal to the LRN, the GAP equal to the CFNA Destination Digits, and the FCI indicator to dipped.

(7) The call is completed with the new destination.

3.2.2.3 The Mobile-to-Land Call

Figure 3-4 illustrates a mobile to landline call in which the MSC is not the designated querying switch, i.e. a PSTN switch will perform the query. Figure 3-5 also illustrates a mobile to landline call, but in this case the MSC is the designated querying switch.

Figure 3-4 Mobile to Landline - PSTN Performs Query

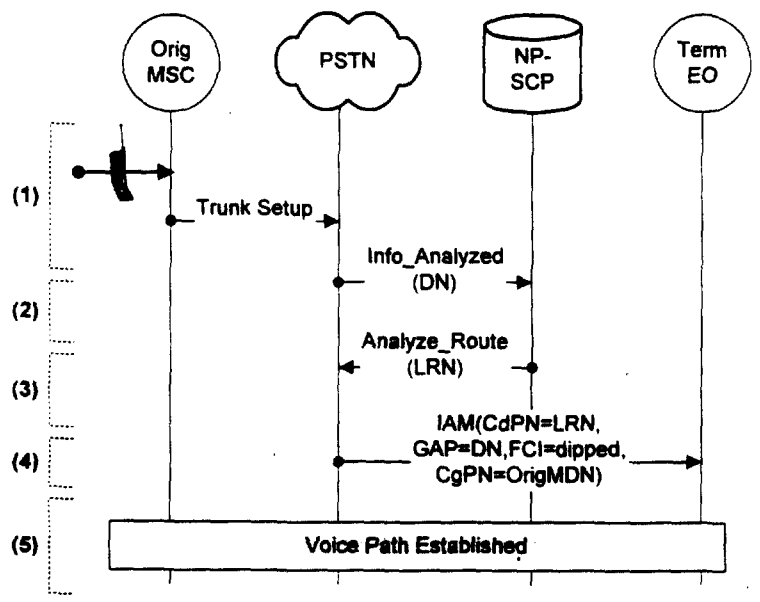

Associated Call Flow Description:

(1) A mobile places a call, and the Originating MSC passes the call to the PSTN.

(2) The PSTN detects DN is within a portable block and launches a query to the NP-SCP with the landline DN.

(3) The NP-SCP returns the LRN for the DN.

(4) The PSTN formulates and sends the IAM message with the CdPN equal to the LRN, the GAP equal to the DN and the FCI mth bit set as queried to the terminating end office.

(5) The Terminating EO will complete the call to the loop to the assigned to the DN. The call is then connected.

Figure 3-5 Mobile to Landline - MSC Performs Query

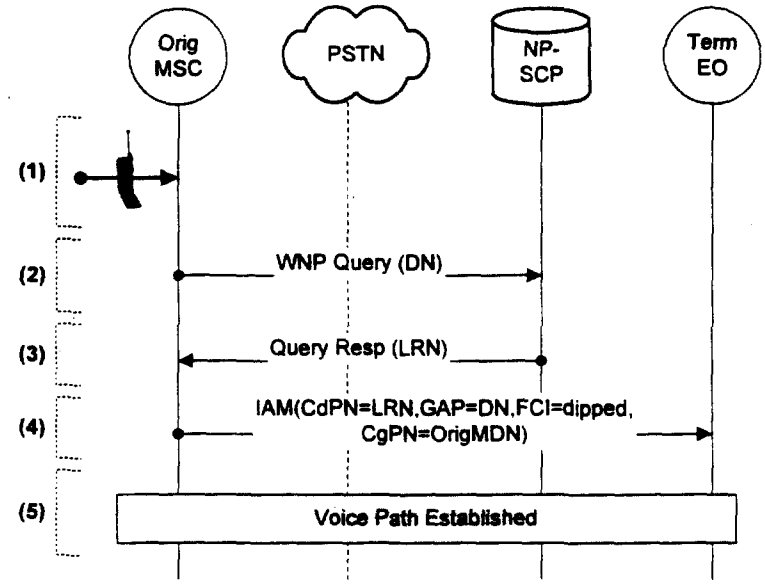

Associated Call Flow Description:

(1) A mobile places a call

(2) The Originating MSC detects DN is within a portable block and launches a query to the NP-SCP with the landline DN.

(3) The NP-SCP returns the LRN for the DN.

(4) The MSC formulates and sends the IAM message with the CdPN equal to the LRN, the GAP equal to the DN and the FCI mth bit set as queried to the terminating end office.

(5) The Terminating EO will complete the call to the called DN.

3.2.2.4 The Mobile-to-Mobile Call

Figure 3-6 illustrates a mobile to mobile call in which the MSC is not the designated querying switch, i.e. a PSTN switch will perform the query. Figure 3-7 also illustrates a mobile to mobile call, but in this case the MSC is the designated querying switch. In fact, these figures illustrate that a concatenation of the previous figures (mobile originated and mobile terminated) produce expected results. This is an expected result because the originating and terminating MSCs are unaware of one another.

Therefore, no text is included beyond the figures for the sake of readability. Readers can infer the appropriate descriptions based on the previous call flows.

Figure 3-6 Mobile to Mobile - PSTN Performs Query

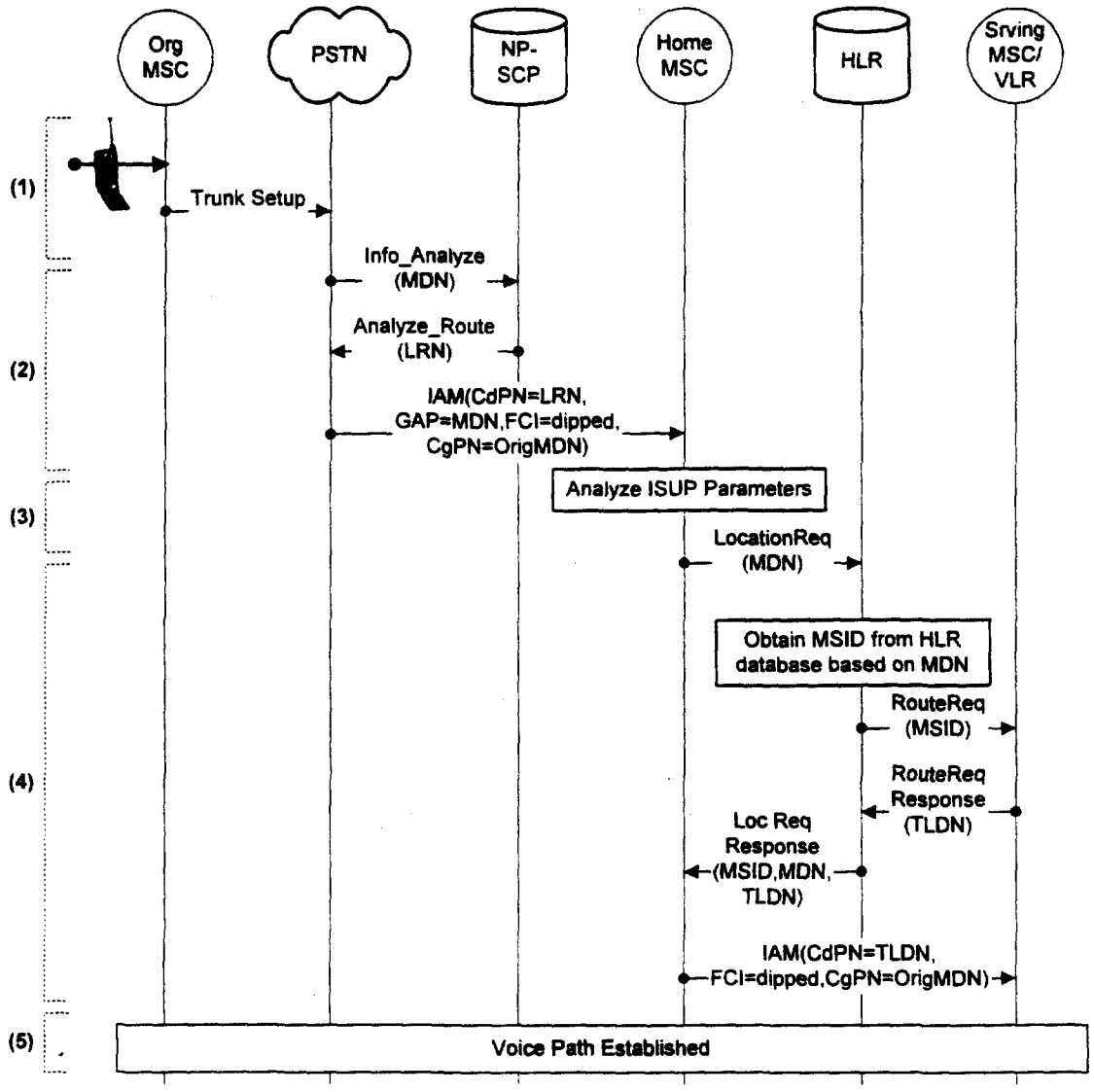

Figure 3-7 Mobile to Mobile - MSC Performs Query

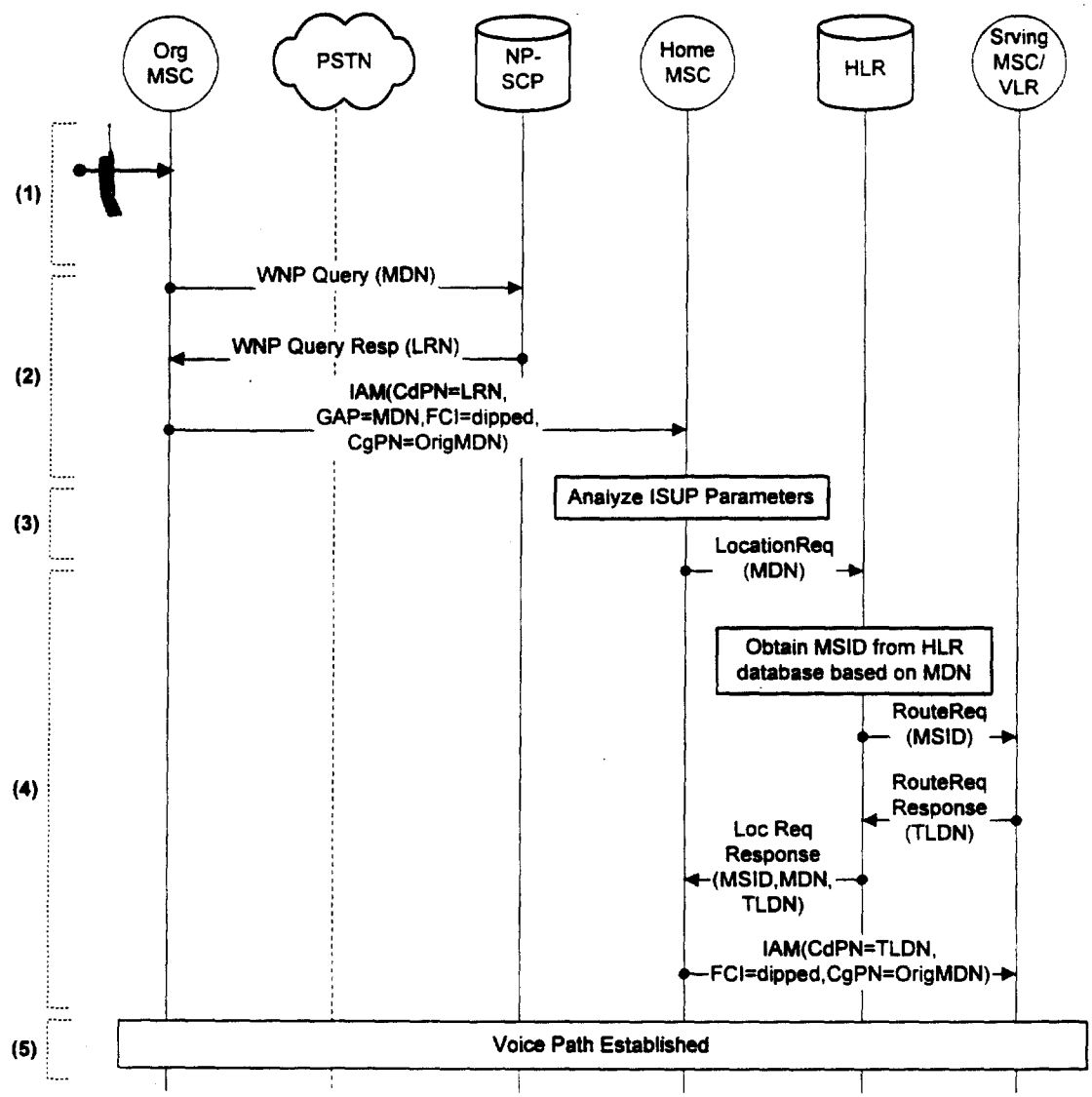

3.3 *Feature Interactions*

This section describes the effect of WNP on the current base of wireless services.

3.3.1 *Operator Services*

An MSC can connect to an operator tandem switch in one of the three following ways:

- via a Type 1 connection to a local telephone company central office switch that interconnects with the operator tandem;
- via a Type 2D connection directly to the operator tandem; or
- via a Type 2A connection to an access tandem that interconnects with an inter-exchange carrier operator tandem using Feature Group D (FGD) signaling.

A mobile station dialing any of the following should route the call directly to the operator tandem where, if necessary, it will perform the query:

- 0-
- 00-
- 10xxx0-
- 101xxxx-0-
- 0-NPA-NXX-XXXX
- 10XXX-0-NPA-NXX-XXXX
- 101XXXX-0-NPA-NXX-XXXX

Existing ANI information transfer and AMA recording at the operator tandem will be sufficient to support WNP. However, the MSC must be modified to forward the MDN and not the MSID as the ANI digits.

3.3.2 *Roamer Access Port*

The Roamer Access Port service is one of several means of supporting call termination to roamers. Another feature of the Roamer Access Port is to allow the caller to directly be connected to the serving system, eliminating the call segment from the home system to the serving system.

Under the Roamer Access Port services, today, the caller dials a roamer access port number to reach the visited system and enters a roamer's MIN (as an MDN). When the MDN and MSID are separate, the serving system will also need to know the roamer's MSID.

3.3.3 Emergency Services

An MSC can connect to Emergency Services Providers (ESPs) in many ways. The current arrangements typically do not automatically forward the mobile station callback number to the ESP. For such arrangements, the ESP attendant must verbally request the callback number, if desired. FCC rules regarding emergency service calls from wireless systems dictate that by April 1, 1998, an MSC must automatically forward the mobile station callback number along with information identifying the cell site of call origin.

In any proposed configuration, the MDN must be provided to the ESP for callback purposes. The impact on the MSC with the WNP is such that the MSC must be modified to forward the MDN and not the MSID.

To meet the proposed April 1, 1998, FCC requirements, both the MF-FGD signaling and the SS7 ISUP (CPN) signaling arrangements may, in fact, be utilized. Therefore, the MSC must forward the MDN and not the MSID as the FGD ANI digits and must forward the MDN in the CPN parameter of the SS7 ISUP IAM message. This requirement applies to both home mobile stations and roaming mobile stations. Consequently, the MDN must be retrieved from the home system for any registered roaming mobile stations.

The impact of WNP with regard to Emergency Callback whether the call back is over a roamer access port or otherwise requires further study.

3.3.4 Short Message Service

3.3.4.1 Impact of Number Portability

Today, the recipient of a short message is identified by an MDN. The originating network uses the dialed MDN to route the short message to the destination home system. The dialed MDN is the same as the MIN or the first 6 digits of the dialed MDN are the same as the first 6 digits of the MIN if the MDN and MIN are separated. Typically, the first six digits of today's dialed MDN or MIN provide sufficient routing information for the short message to be delivered to the destination home system.

The wireless industry has decided to separate the MSID and the MDN to support WNP. As a result, Short Message Service (SMS) delivery is impacted. SMS will not operate properly as it is currently defined if the destination mobile station has ported its MDN. When the mobile station ports to another service provider, it is assigned a new MSID. The new MSID, particularly the first six digits, will identify the new service provider. However, when a short message is initiated to the ported mobile station, the calling party will only provide the MDN to the network. Since the destination MS has ported, the originating Short Message Entity (SME) or the SS7 network must analyze all the digits of the MDN to derive the necessary routing information to deliver the short message to the destination home system of the ported mobile station.

Five alternatives have been proposed to address the SMS routing problem in the WNP environment. In order to discuss and compare the alternatives, they must each address the following scenarios:

(a) Direct Routing to the Destination Home MC

If the short message need not go through the message originator's home MC, the short message is sent to the destination home MC directly from the originator's serving MSC. The case where a short message is sent from the originator's home MC to the destination home MC is covered under this scenario.

(b) Force Routing through the Message Originator's Home MC

If the SMS Origination Restriction of the originator indicates that the short message must be routed through the originator's home MC, the short message should be sent to the originator's home MC first.

(c) International Roaming

Each alternative must work if the short message is to be sent across the national boundaries (e.g., from the originator's serving MSC in one country to the destination home MC in another country).

Messages routing across national boundaries involves global title translations (GTTs) at the STPs in the national SS7 networks, originating and destination, and at the international gateway STPs in the international domain/level. This section focuses on messages required to be sent across the national boundaries and the translation types that may be required when a particular alternative is discussed.

3.3.4.2 Possible SMS Delivery Alternatives

The alternatives described in this section are to provide the industry with a starting point in addressing SMS impact in a WNP environment. The final solution(s) is for further study.

The descriptions of the alternatives below illustrate the successful delivery of a mobile originated short message to a ported MS. Also, these alternatives assume that the originating system is different from the destination system. Lastly, these alternatives are illustrated using IS-41 messaging protocol as an example.

The call flow procedures described below for each of the five alternatives are for scenario A and in the domestic domain. However, the discussion of the advantages and disadvantages of each alternative will cover scenarios A, B and C.

The following are for clarification in describing the alternatives: [30]

- Short Message Entity (SME) is a functional entity that composes and decomposes short messages. It may be located within and be indistinguishable from an MSC, HLR, VLR, MS, or MC.
- The message center (MC) is an entity that stores and forwards short messages. The MC may also provide supplementary services for SMS.

The following translation types have been identified in the forthcoming alternatives as potentially needed for routing short messages:

- MIN-to-MC translation. This translation type is existing, TT=12.
- IMSI-to-MC translation. This translation type is also existing, TT=13.
- MDN-to-MC translation. This translation type has not yet been defined.
- LRN-to-MC translation. This translation type has not yet been defined.
- MDN-to-NP-SCP translation. This translation type has not yet been defined. This translation type is needed in alternatives 2, 3 and 4 if the short message is to be delivered outside of the NPAC region.

SMS Alternative 1: SMS Forward to Serving Home MC

In alternative 1, an SMS Delivery Point to Point (SMDPP) message is first routed to the donor message center (MC). The donor MC then forwards the short message to the subscriber's home destination MC. The short message is routed to the donor MC by an MDN-to-(donor) MC translation via a 6-digit GTT at the STP or internal lookup table.

The donor MC locates the correct "serving" home MC of a ported subscriber by mapping the dialed MDN to its home MC (i.e., the translation is established via business arrangement). Then, it forwards the message to the serving home MC. The donor MC may be the "original" home MC that serves the MDN before it is ever ported or may be an MC that provides an SMS forwarding service to "original" home systems that do not support SMS (e.g., third party donor MC or wants a third party to perform the forwarding function).

In the situation where the original system is a non-SMS capable system (i.e., had no MC), it is preferable for the third party donor MC to serves all the ported subscribers of the original system (within an NPA-NXX block). This will allow the preservation of 6-digit translation (e.g., 6-digit GTT at the STP) in routing short messages to the donor MC.

[30] The definitions are from IS-41, TIA/EIA SP 3588.1, Functional Overview, sections 5.1.6 and 5.1.10.

The following illustration along with the call flow procedures describes a successful short message delivery to a ported MS-based SME (i.e., terminating supplementary services):

Figure 3-8 Alternative 1 for SMS Delivery

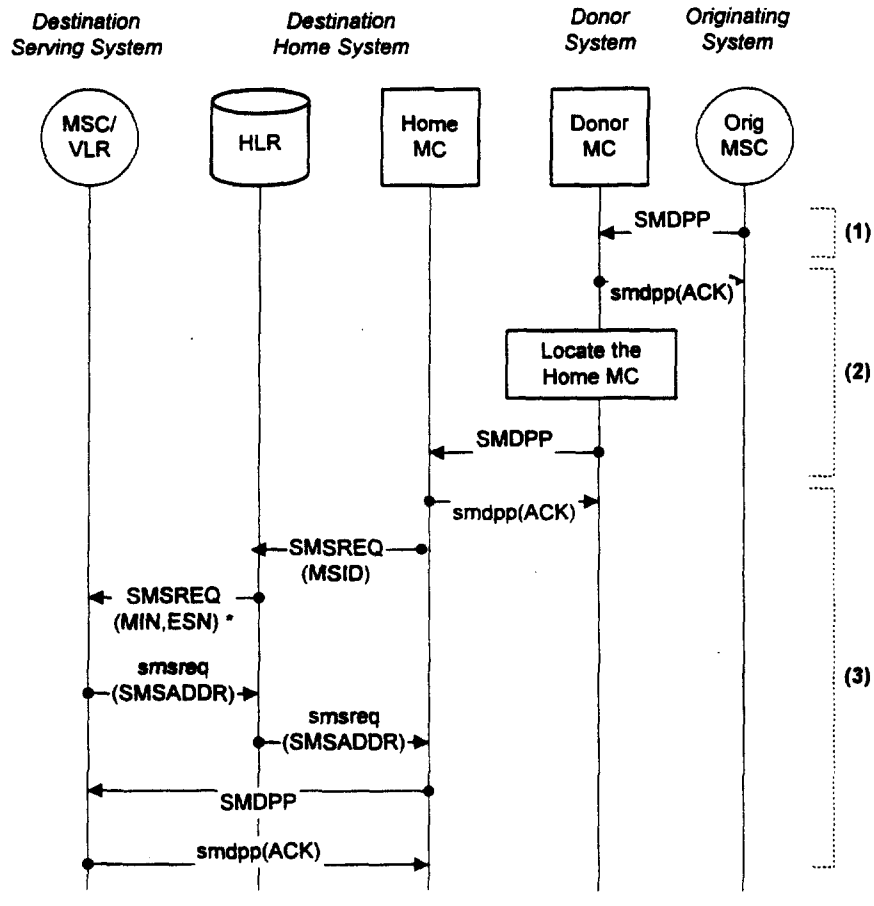

* These messages are sent if the HLR does not have a current temporary SMS routing address

The detailed steps are as follows:

(1) The originating MSC routes the short message to the donor MC by performing an MDN-to-MC translation (i.e., via GTT at the STP or internal table).

If the subscriber has not been ported the donor MC is the subscriber's destination home MC and should existing procedures to deliver the short message.