the full output of the modem will over-drive the input of the other unit and produce too much distortion to function.

If the units function back to back but fail on the actual link, it is possible that there is either too much or too little loss on the link. If the loss is greater than about 30 dB, the modems may not function reliably.

Very short loops may have less loss than the modem expects. A pad may be installed in the link to increase the link loss or the transmit level may be reduced on the modem board. Lands are provided on the board for the addition of a pot or a pair of resistors to provide control of the transmit carrier level. Contact the factory for information on this modification.

A cursory check of the modem can be made by monitoring the line output with headphones. You should hear a continuous stream of data from both units. The transmitter unit must transmit on one frequency pair while the studio unit transmits on the other. Make certain that the plug-on jumper is installed on different pins in both units.

If you suspect that the line has been hit by lightning, it is possible that the protective components have been zapped. The MOV, zener diodes and .01 capacitors can be removed and the 5 ohm resistors jumpered to determine if this is the problem. If this restores normal operation, replace the damaged components promptly to avoid more serious damage.

Radio modems can be tested by connecting the units back to back. Adjustment may be made by following the procedures on page 55-A. **Do not attempt these adjustments without proper test equipment.** The only adjustment normally required is injection level, which may be set to produce the proper level for the associated exciter or STL transmitter. If no metering is provided on the associated equipment, observe the output on an oscilloscope and set the injection for the specified level. Deviation should only be adjusted if proper equipment is available.

TC-8 INTERCONNECTION DIAGRAM

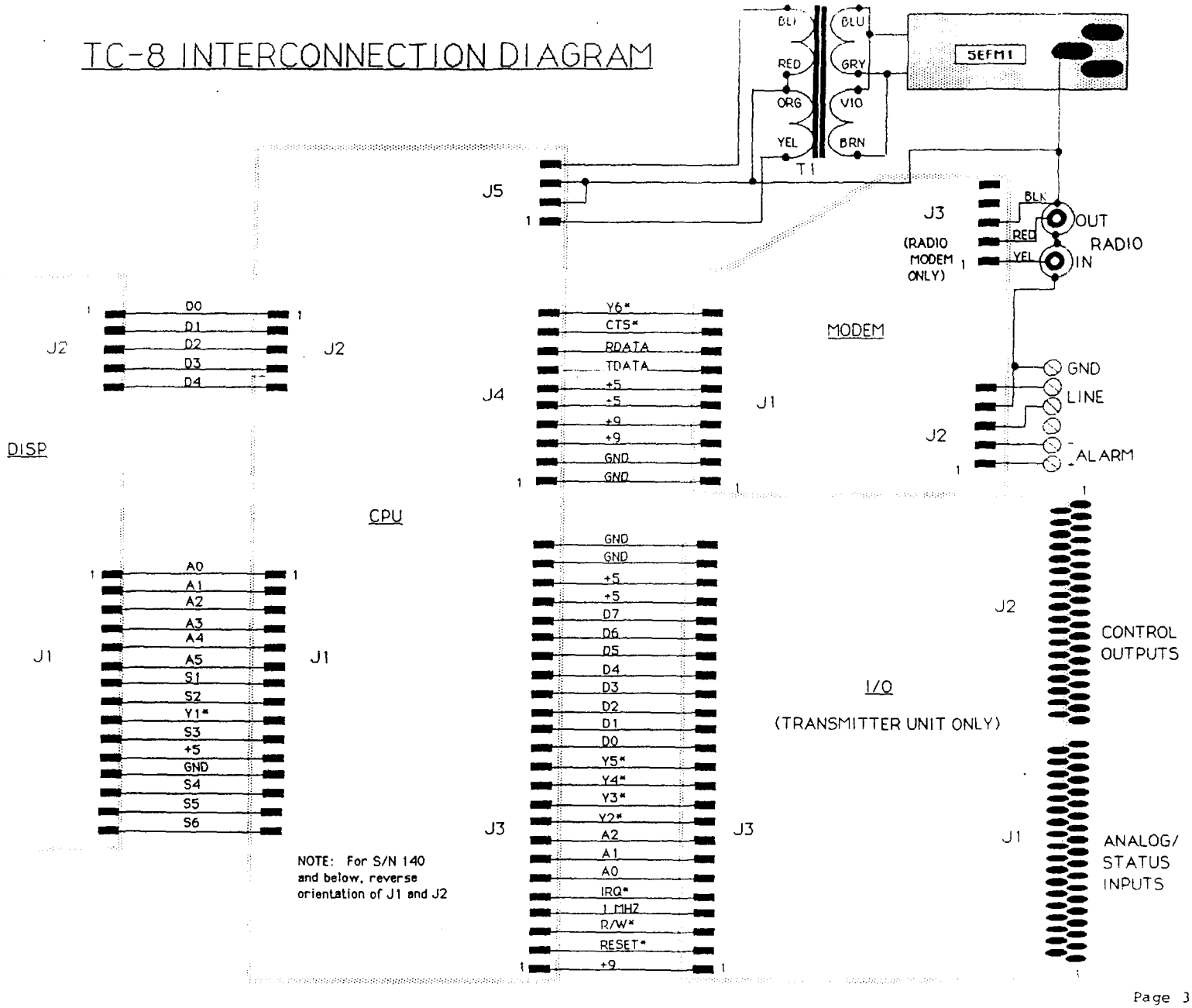

NOTE: For S/N 140 and below, reverse orientation of J1 and J2

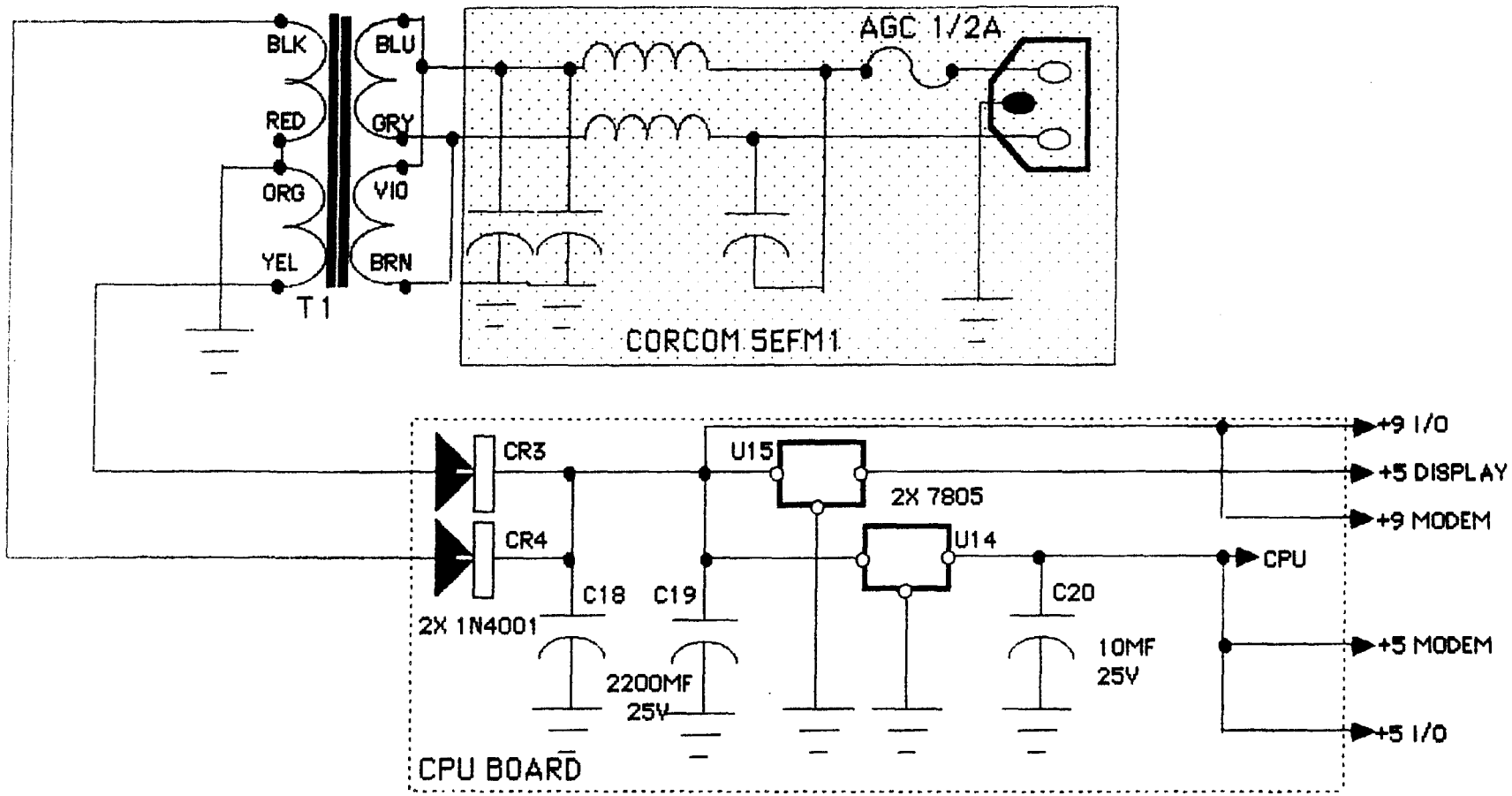

TC-8 POWER SUPPLY SCHEMATIC

TC-8
POWER SUPPLY
SCHEMATIC

PARTS LIST

TC-8 POWER SUPPLY

Qty	Reference	Manufacturer	MPN	Description
1	FL1	CORCOM	5EFM1	POWER ENTRY MODULE
1	T1	AVEL-LINDBERG	40-3006	POWER TRANSFORMER
		FOLLOWING COMPONENTS LOCATED ON CPU BOARD:		
2	C18,19	CHEMICON	SM2JT222M	CAP 2200UF/25V AL
1	C20	SPRAGUE	513D106M-050JA4	CAP 10UF/35V AL
2	CR3,4	FAIRCHILD	1N4001	DIODE
2	U14,15	MOTOROLA	UGH7805	VOLTAGE REGULATOR

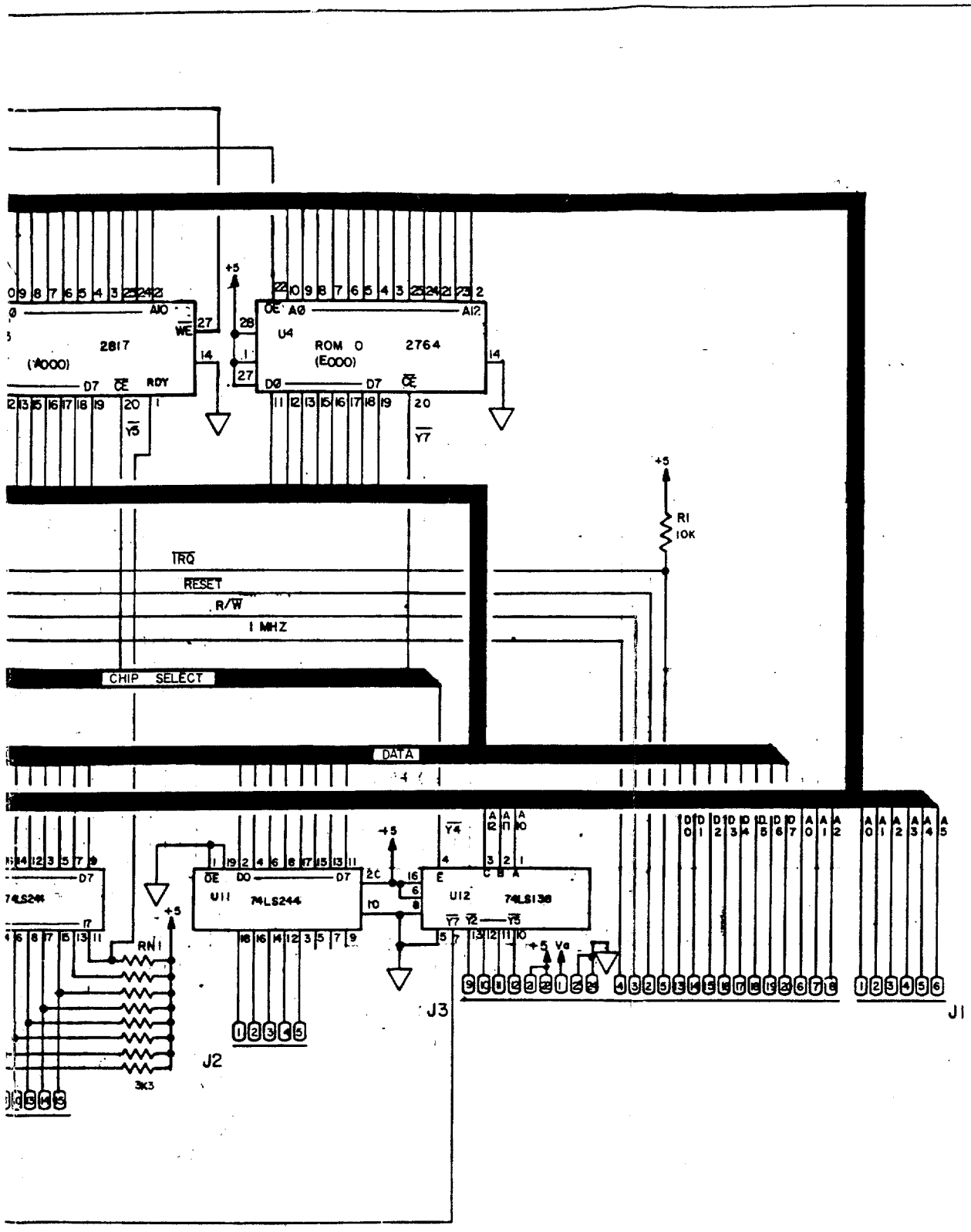

ADDR Burk Technology, Inc.		
TC8 CPU BOARD SCHEMATIC		
DRAWN RCB	9-4-85	No. 10952

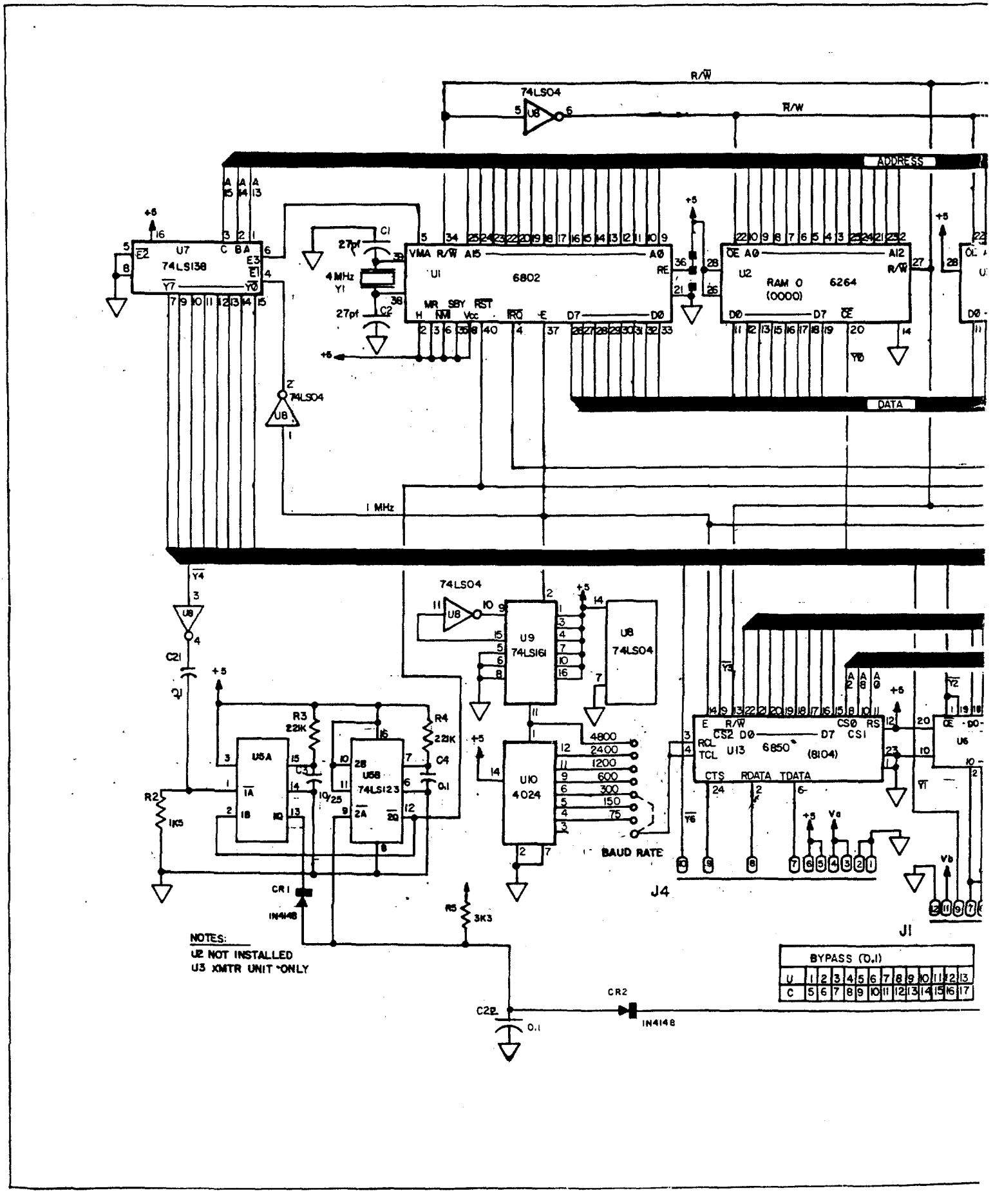
R/W
74LS04
U8
ADDRESS
DATA
U7
74LS138
U1
6802
U2
RAM 0
(0000)
6264
4 MHz
Y1
27pf
C1
C2
1 MHz
U9
74LS161
U10
4024
U5A
U5B
74LS123
R3
22K
R4
22K
C3
C4
0.1
R2
1K5
C21
CR1
1N4148
R5
3K3
C22
CR2
BAUD RATE
4800
2400
1200
600
300
150
75
U13
6850
(8104)
CS0
RS
CS2
D0
D7
CS1
RCL
TCL
CTS
RDATA
TDATA
J4
J1
NOTES:
U2 NOT INSTALLED
U3 XMTR UNIT ONLY
BYPASS (0.1)
U 1 2 3 4 5 6 7 8 9 10 11 12 13
C 5 6 7 8 9 10 11 12 13 14 15 16 17

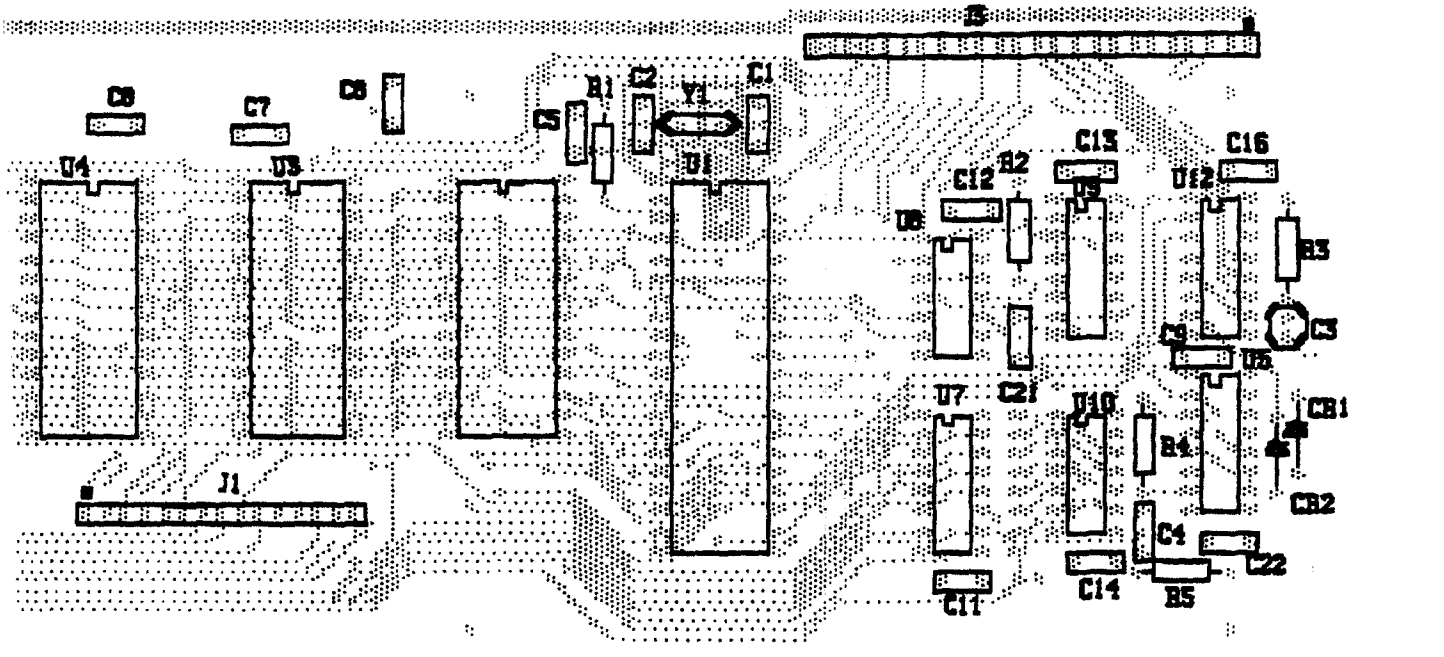

TC-8 CPU BOARD
X-RAY VIEW

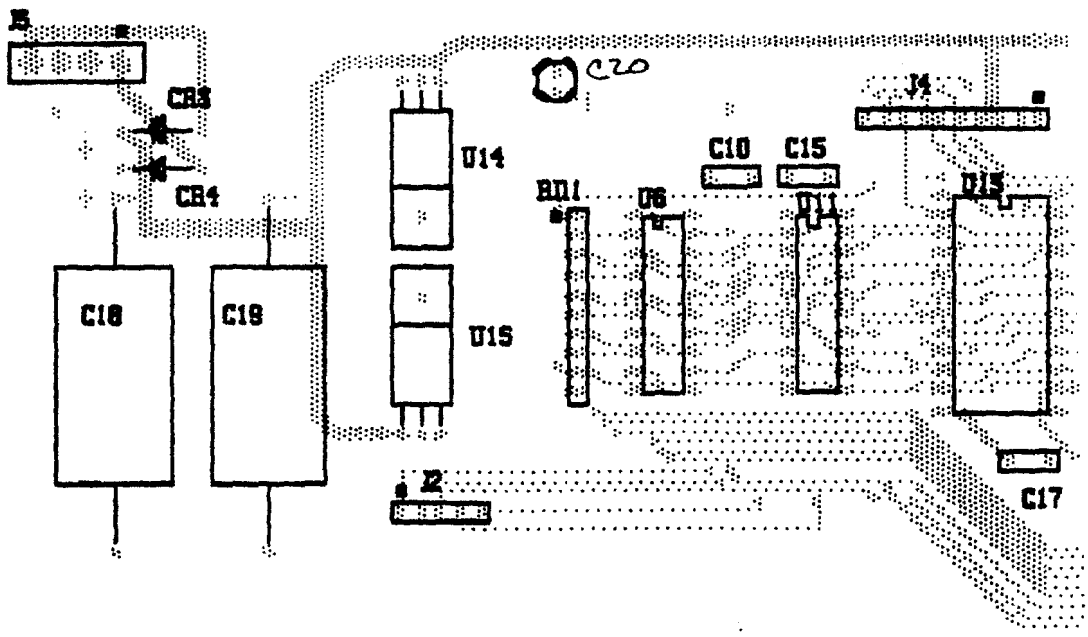
J5
CR3
CR4
C18
C19
U14
U15
C20
RN1
U6
C10
C15
U11
J4
U15
C17
J2

PARTS LIST

TC-8 CPU BOARD

Qty	Reference	Manufacturer	MPN	Description
2	C1,2	CENTRALAB	DD-270	CAP 27PF DISC CERAMIC
1	C3	SPRAGUE	513D106M-050JA4	CAP 10UF/35V AL
16	C4-17,21,22	CORNING	CRC220X7R-104K050	CAP 0.1UF MONOLITH.CER.
2	CR1,2	FAIRCHILD	1N4148	DIODE
1	J1	PANDUIT	MFSS100-15	HEADER 15 PIN
1	J2	PANDUIT	MFSS100-5	HEADER 5 PIN
1	J3	PANDUIT	MFSS100-24	HEADER 24 PIN
1	J4	PANDUIT	MFSS100-10	HEADER 10 PIN
1	J5	PANDUIT	MFSS156-4	HEADER 4 PIN
1	R1	MEPCO	SFR55D10K0	RES. 10.0K .25W 1% MET FILM
1	R2	MEPCO	SFR55D1K50	RES. 1.50K .25W 1% MET FILM
2	R3,4	MEPCO	SFR55D221K	RES. 221K .25W 1% MET FILM
1	R5	MEPCO	SFR55D3K32	RES. 3.32K .25W 1% MET FILM
1	RN1	BOURNS	4610X-101-332	RES. NET. 3.3K SIP 10/9
1	U1	MOTOROLA	6802P	IC MICROPROCESSOR
1	U3	INTEL	2817A4	IC 16K EPROM
1	U4	INTEL	2764A4	IC 64K EPROM
1	U5	MOTOROLA	74LS123	IC DUAL RETRIG. MONOSTABLE
2	U6, 11	MOTOROLA	74LS244	IC OCTAL 3-STATE BUFFER
2	U7, 12	MOTOROLA	74LS138	IC 3-8 DECODER
1	U8	MOTOROLA	74LS04	IC HEX INVERTER
1	U9	MOTOROLA	74LS161	IC SYNCH. 4-BIT BINARY CTR
1	U10	RCA	CD4024	IC DIVIDER
1	U13	MOTOROLA	6850P	IC ACIA
1	Y1	KDS		CRYSTAL 4.00 MHZ HC-18

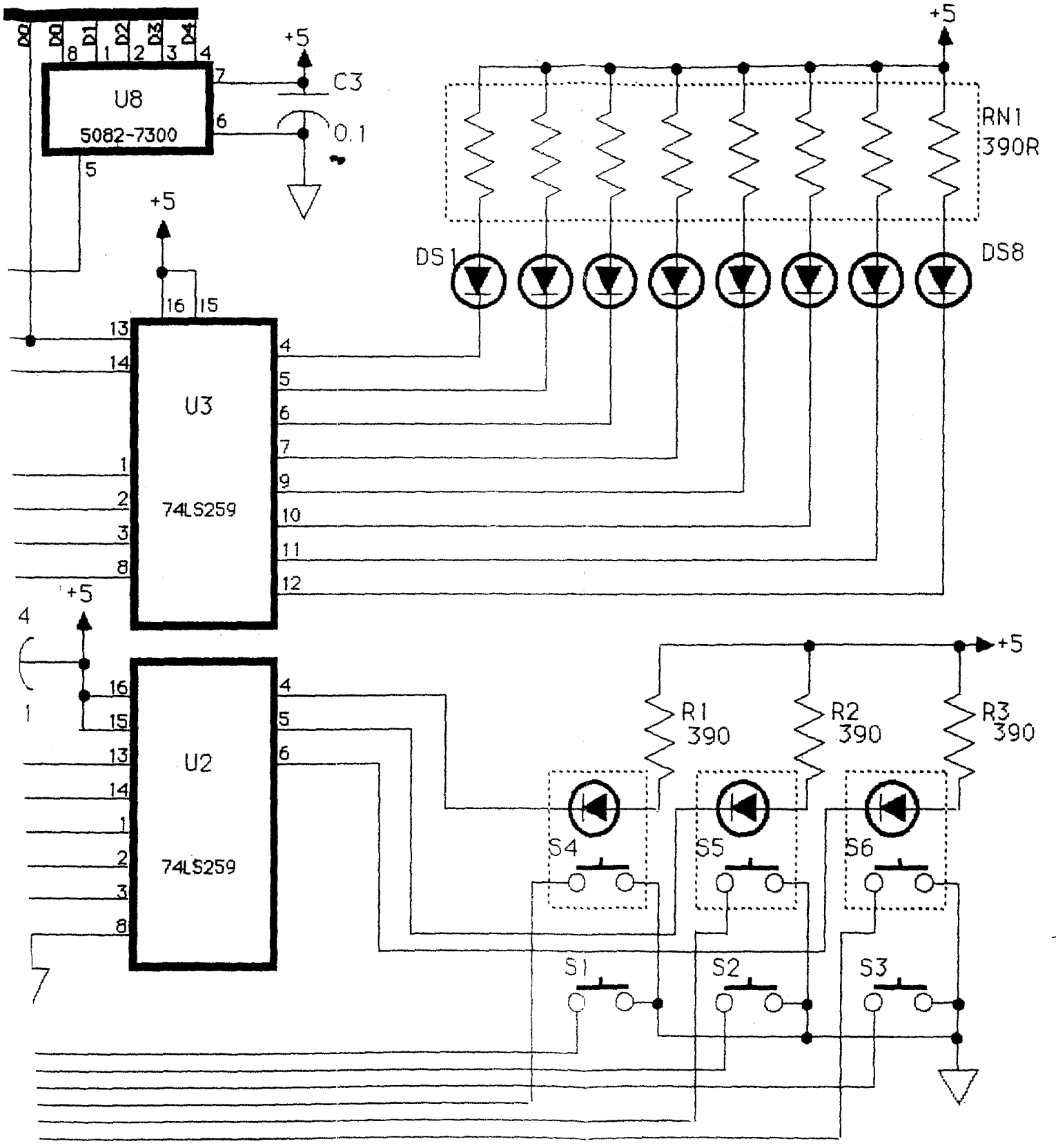

Burk Technology, Inc.

TC-8 DISPLAY BOARD

SCHEMATIC DIAGRAM

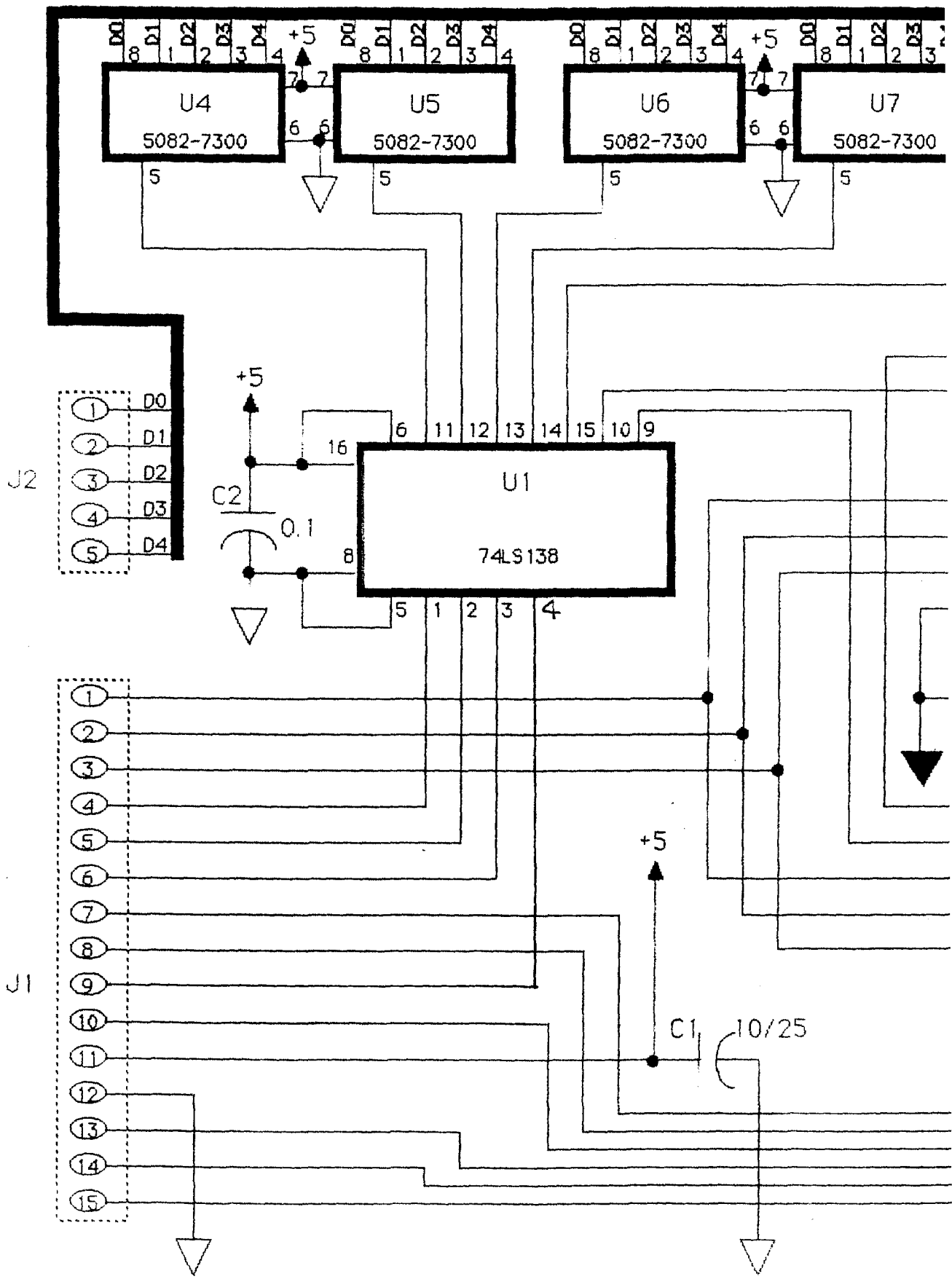
U4
5082-7300
U5
5082-7300
U6
5082-7300
U7
5082-7300
D0
D1
D2
D3
D4
+5
J2
J1
U1
74LS138
C2
0.1
C1
10/25

Parts List

TC-8 Display Board

Qty	Reference	Manufacturer	MPN	Description
1	C1	SPRAGUE	513D106M-050JA4	CAP 10UF/35V AL
3	C2-4	CORNING	CRC220X7R-104K050	CAP 0.1UF MONOLITH. CER.
8	DS1-8	H-P	HLMP-1000	LED T1 RED
1	J1	PANDUIT	MFSS100-15	HEADER 15 PIN
1	J2	PANDUIT	MFSS100-5	HEADER 5 PIN
3	R1-3	MEPCO	SFR55D390R	RES. 390 R .25W 1% MET. FILM
1	RN-1	BOURNS	4610X-101-391	RES. NET. 3.3K SIP 10/9
3	S1-3	SCHADOW	SEAUOA0201	SWITCH DIGITAST WHITE
3	S4-6	SCHADOW	SEAUOA0102R	SWITCH DIGITAST BLK W/RED LED
1	U1	MOTOROLA	74LS138	IC 3-8 DECODER
2	U2,3	MOTOROLA	74LS259	IC 8-BIT ADDRESSABLE LATCH
5	U4-8	H-P	5082-7300	IC NUMERIC DISPLAY

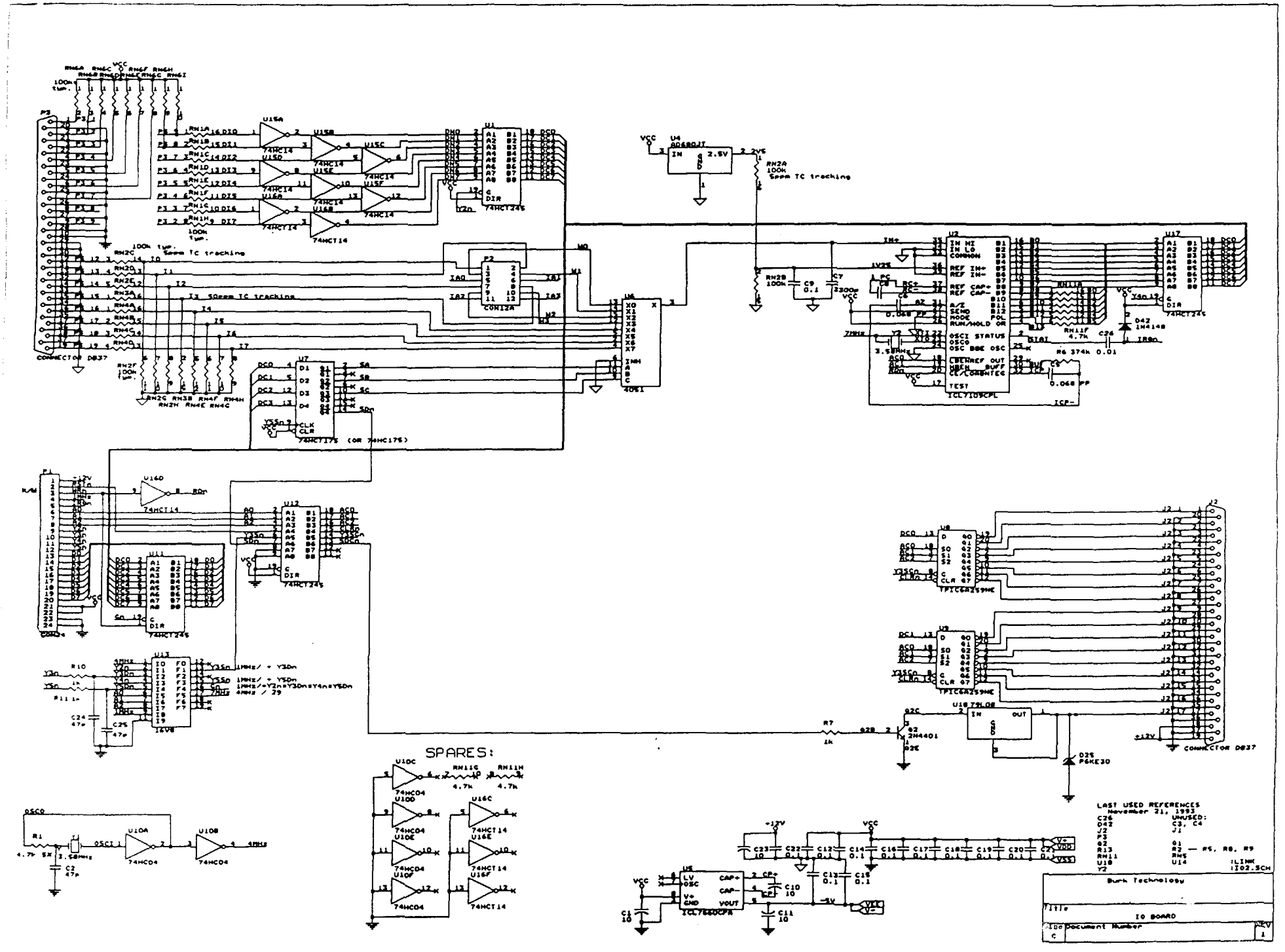
SPARES:
LAST USED REFERENCES
November 21, 1993
C26
D42
J2
P3
Q2
R13
RN11
U18
Y2
UNUSED:
C3, C4
J1
Q1
R2 — R5, R8, R9
RN5
U14
!LINK
!I02.SCH
Bunk Technology
Title
IO BOARD
Size
Document Number
C
REV
1

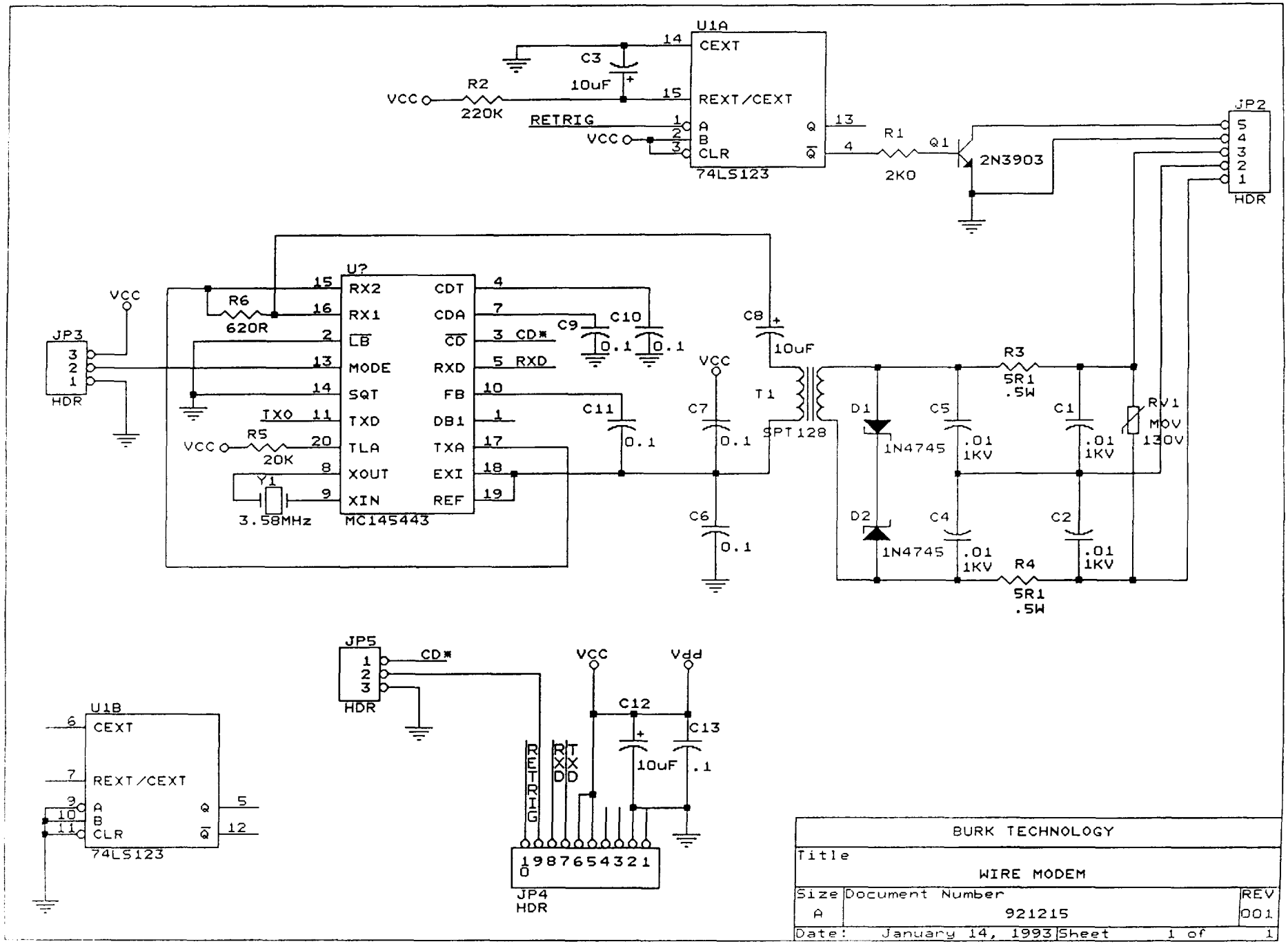
U1A
CEXT
REXT/CEXT
A
B
CLR
Q
Q̄
74LS123
C3
10uF
R2
220K
VCC
RETRIG
R1
2K0
Q1
2N3903
JP2
HDR
U?
RX2
RX1
LB
MODE
SQT
TXD
TLA
XOUT
XIN
CDT
CDA
CD
RXD
FB
DB1
TXA
EXI
REF
MC145443
R6
620R
JP3
HDR
TX0
R5
20K
Y1
3.58MHz
CD*
RXD
C9
C10
0.1
C11
C7
C6
C8
10uF
T1
SPT128
D1
D2
1N4745
C5
C4
C1
C2
.01
1KV
R3
R4
5R1
.5W
RV1
MOV
130V
JP5
HDR
U1B
74LS123
JP4
HDR
1987654321
0
RETRIG
RXD
TXD
C12
C13
Vdd
BURK TECHNOLOGY
Title
WIRE MODEM
Size
A
Document Number
921215
REV
001
Date: January 14, 1993
Sheet 1 of 1

Configuring Universal Modems

The Universal Modem provides for a variety of communication options required for linking Burk Technology remote control systems.

Standard on the Universal Modem is FSK Audio communication, but it may be easily converted for use with STL or FM Broadcast subcarriers, and even RS-232 data links with simple plug-in modules.

AUDIO INPUT - For use with an audio input (TRL, SCA receivers,..) no INPUT MODULE should be installed. Instead, a single 2-pin shunt is connected at JP6, pins 5 and 6 (marked with '*' on board). The 3-pin INPUT selector JP5 should have its 2-pin shunt installed to the AUDIO (Right) pair of pins.

AUDIO OUTPUT - For audio output, no OUTPUT MODULE is required. Audio is always present at the LINE 1 terminal on the back panel. Audio will also appear on the BNC OUTPUT connector if OUTPUT selector JP9 has a 2-pin shunt on the AUDIO (Right) set of pins.

SUBCARRIER INPUT - INPUT MODULES are used to recover subcarrier data for use by the remote control. Any shunts should be removed from JP6, and the desired INPUT MODULE installed. The INPUT selector JP5 should have a shunt installed on the MODULE (Left) position.

SUBCARRIER OUTPUT - Various OUTPUT MODULES are available which can generate FM subcarriers for use on STLs and on FM broadcast channels. An OUTPUT MODULE should be installed at JP7, and the OUTPUT selector JP9 should have a shunt installed on the MODULE (Left) position. A single control is provided for adjustment of injection level.

DIGITAL INPUT - For recovery of RS-232 data, install an INPUT DIGITAL MODULE in place of a shunt at JP6. Move the INPUT selector JP5 to MODULE (Left).

DIGITAL OUTPUT - RS-232 communication is treated in the same manner as a subcarrier. Install an OUTPUT DIGITAL MODULE at location JP7, and select MODULE (Left) on OUTPUT selector JP9.

Available modules include:

OUTPUT DIGITAL MODULE	INPUT DIGITAL MODULE
OUTPUT 39 KHZ MODULE	INPUT 39 KHZ MODULE
OUTPUT 67 KHZ MODULE	INPUT 67 KHZ MODULE
OUTPUT 92 KHZ MODULE	INPUT 92 KHZ MODULE
OUTPUT 110 KHZ MODULE	INPUT 110 KHZ MODULE
OUTPUT 152 KHZ MODULE	INPUT 152 KHZ MODULE
OUTPUT 185 KHZ MODULE	INPUT 185 KHZ MODULE

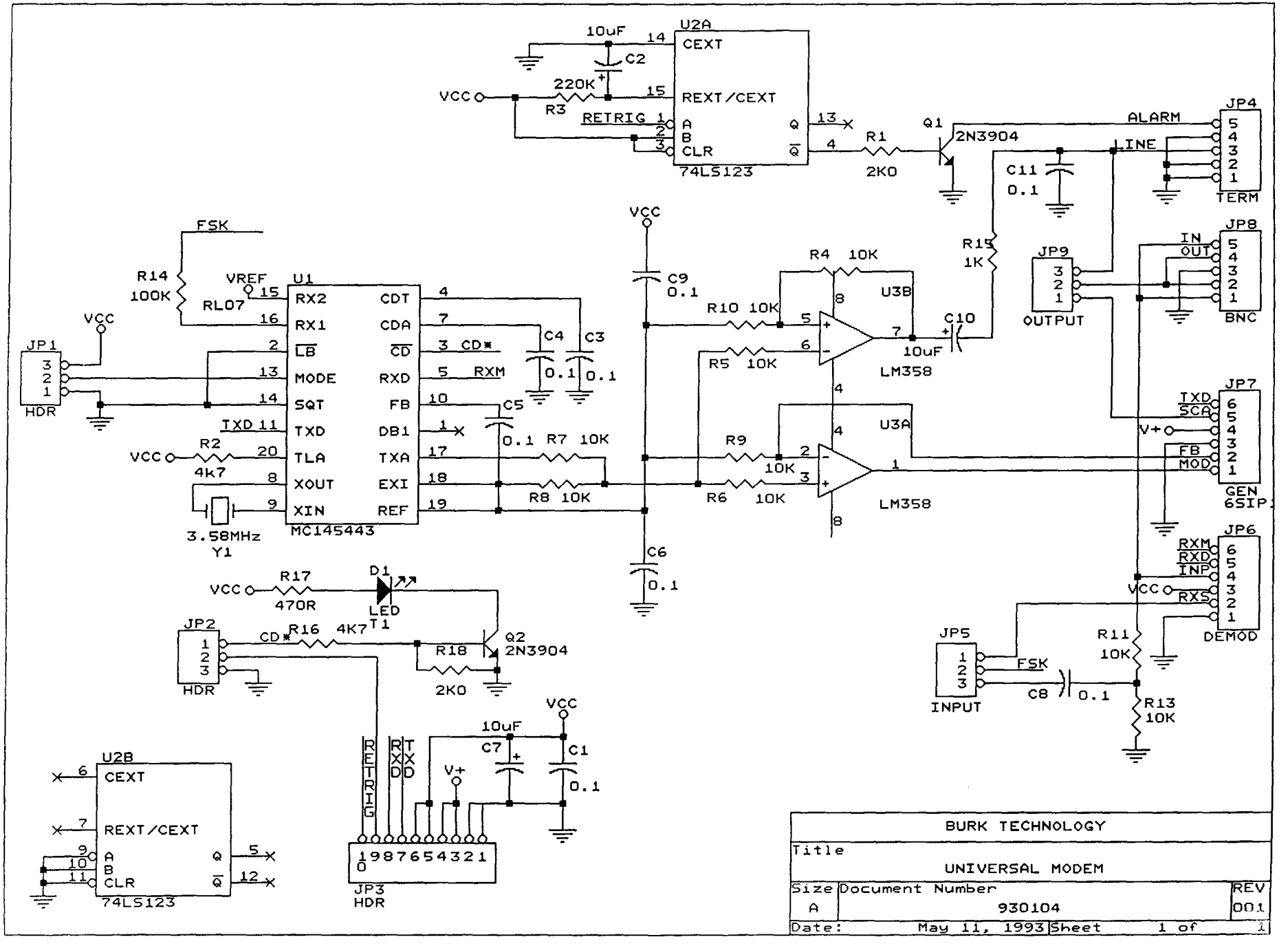
U2A
74LS123
CEXT
REXT/CEXT
RETRIG
A
B
CLR
Q
Q̄
10uF
C2
220K
R3
VCC
R1
2K0
Q1
2N3904
ALARM
LINE
JP4
TERM
C11
0.1
JP8
BNC
IN
OUT
JP9
OUTPUT
R15
1K
R4 10K
U3B
LM358
C10
10uF
R10 10K
R5 10K
U3A
R9
10K
R6 10K
R7 10K
R8 10K
C9
0.1
C6
0.1
FSK
R14
100K
VREF
RL07
U1
MC145443
RX2
RX1
LB
MODE
SQT
TXD
TLA
XOUT
XIN
CDT
CDA
CD
RXD
FB
DB1
TXA
EXI
REF
CD*
RXM
C4
C3
C5
R2
4k7
3.58MHz
Y1
JP1
HDR
JP7
GEN
6SIP
TXD
SCA
V+
FB
MOD
JP6
DEMOD
RXM
RXD
INP
RXS
JP5
INPUT
C8
R11
10K
R13
10K
R17
470R
D1
LED
T1
JP2
HDR
R16 4K7
R18
2K0
Q2
2N3904
U2B
74LS123
C7
C1
JP3
HDR
RETRIG
RTXDD
1987654321
0
BURK TECHNOLOGY
Title
UNIVERSAL MODEM
Size
A
Document Number
930104
REV
001
Date:
May 11, 1993
Sheet
1 of
1

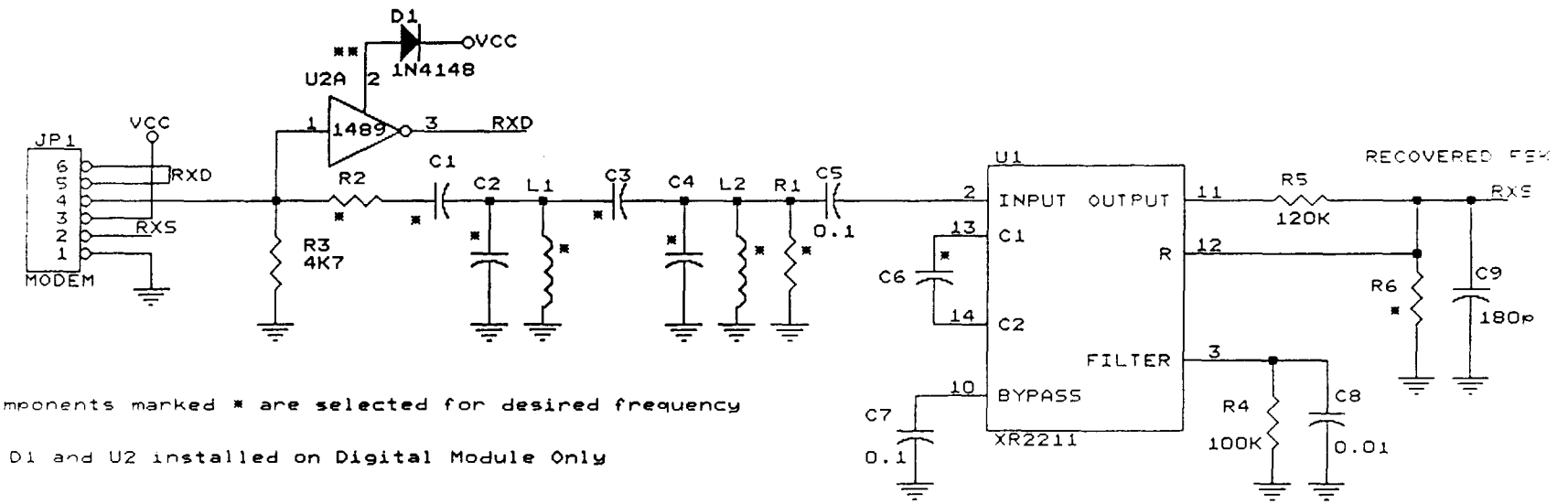

Components marked * are selected for desired frequency

** D1 and U2 installed on Digital Module Only

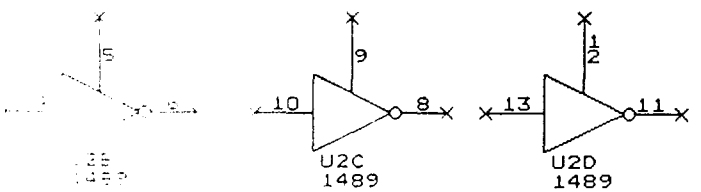

BURK Technology		
Title: INPUT MODULE		
Size: A	Document Number: 921231	REV
Date: May 11, 1993	Sheet 1 of	

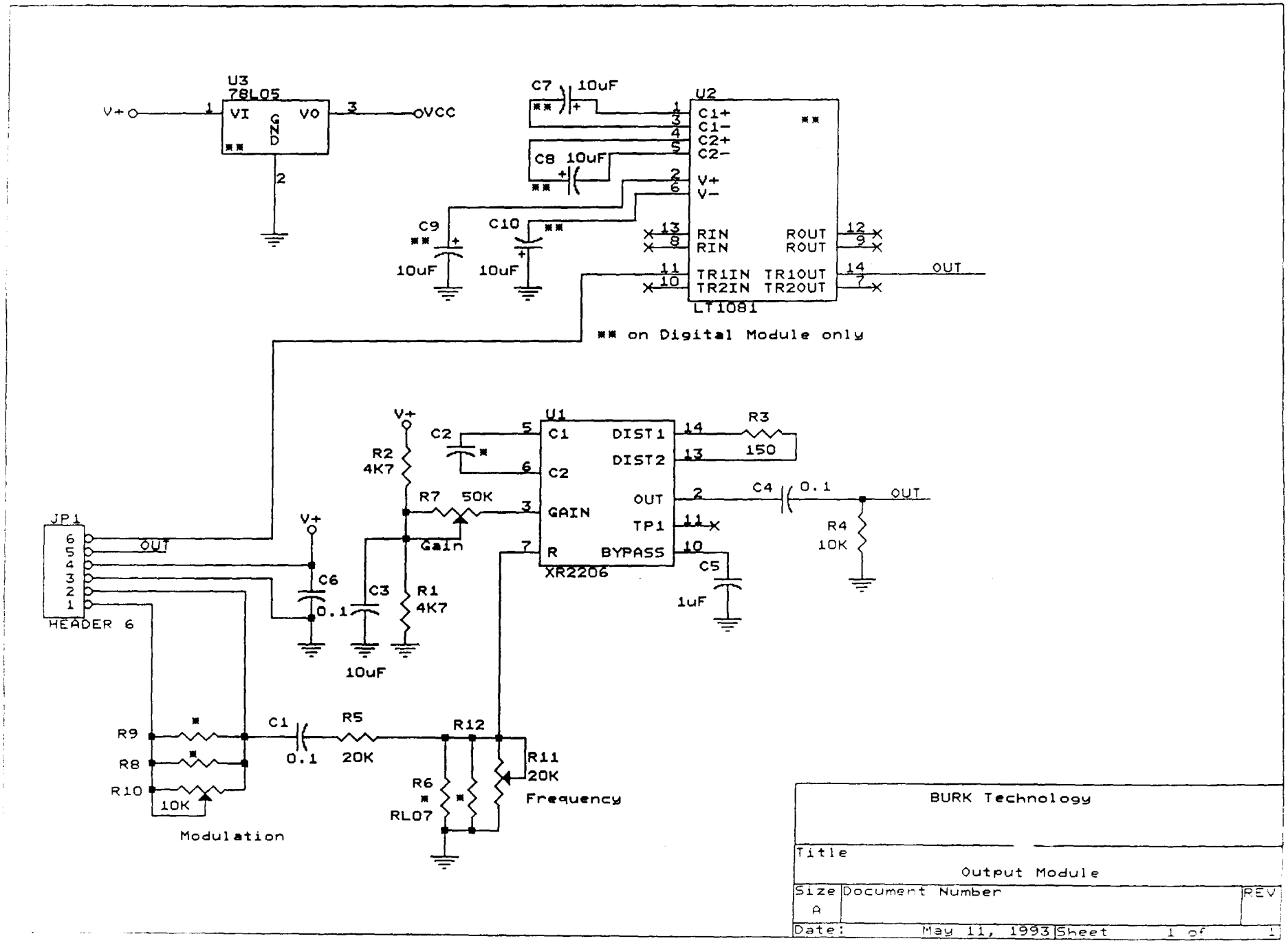
U3
78L05
V+
VI
GND
VO
VCC
C7 10uF
C8 10uF
U2
C1+
C1-
C2+
C2-
V+
V-
C9
10uF
C10
10uF
RIN
RIN
ROUT
ROUT
TR1IN
TR2IN
TR1OUT
TR2OUT
OUT
LT1081
** on Digital Module only
U1
C1
C2
GAIN
R
DIST1
DIST2
OUT
TP1
BYPASS
XR2206
C2
R2
4K7
R7 50K
Gain
C3
10uF
R1
4K7
C6
0.1
R3
150
C4 0.1
OUT
R4
10K
C5
1uF
JP1
HEADER 6
OUT
R9
R8
R10
10K
Modulation
C1
0.1
R5
20K
R12
R6
RL07
R11
20K
Frequency
BURK Technology
Title
Output Module
Size
A
Document Number
REV
Date: May 11, 1993
Sheet 1 of 1

29

TURRO EXHIBIT NO. 29

T
30

TURRO EXHIBIT NO. 30

Before the

FEDERAL COMMUNICATIONS COMMISSION

Washington, D.C. 20554

In re	)	
	)	
GERARD A. TURRO	)	MM Docket No. 97-122
	)	
For Renewal of License	)	File Nos. BRFT-970129YC
For FM Translator Stations	)	BRFT-970129YD
W276AQ(FM), Fort Lee, NJ, and	)	
W232AL(FM), Pomona, NY	)	
	)	
MONTICELLO MOUNTAINTOP	)	
BROADCASTING, INC.	)	
	)	
Order to Show Cause Why the	)	
Construction Permit for FM Radio	)	
Station WJUX(FM), Monticello, NY,	)	
Should Not Be Revoked	)	

To: Honorable Arthur I. Steinberg
Administrative Law Judge

STATEMENT OF GERARD A. TURRO

Gerard A. Turro, having been duly sworn, under penalty of perjury, states:

On November 6, 1997, I caused a photograph to be taken, true, correct and accurate copies of which are included in my direct case in the above-captioned proceeding as Exhibit No. 29. This photograph was taken outside of the Jukebox Radio studio in Dumont, New Jersey, using an off-the-shelf camera. The photograph shows an antenna associated with the operations of Jukebox Radio in its Dumont studio. This photograph has not been artificially improved, enhanced or otherwise altered.

I state under penalty of perjury that the foregoing is true and correct.

Gerard A. Turro

Then personally appeared before me,
Gerard A. Turro, who executed the
foregoing Statement this 7th day of November, 1997.

My commission expires: 9/1/2002

JOSEPH A. LAZIZZA
NOTARY PUBLIC OF NEW JERSEY
My Commission Expires Sept. 1, 2002

Before the

FEDERAL COMMUNICATIONS COMMISSION

Washington, D.C. 20554

In re	)	
	)	
GERARD A. TURRO	)	MM Docket No. 97-122
	)	
For Renewal of License	)	File Nos. BRFT-970129YC
For FM Translator Stations	)	BRFT-970129YD
W276AQ(FM), Fort Lee, NJ, and	)	
W232AL(FM), Pomona, NY	)	
	)	
MONTICELLO MOUNTAINTOP	)	
BROADCASTING, INC.	)	
	)	
Order to Show Cause Why the	)	
Construction Permit for FM Radio	)	
Station WJUX(FM), Monticello, NY,	)	
Should Not Be Revoked	)	

To: Honorable Arthur I. Steinberg
Administrative Law Judge

STATEMENT OF GERARD A. TURRO

Gerard A. Turro, under penalty of perjury, states:

On November 6 and 8, 1997, I caused two audio tapes to be recorded, true, correct and accurate copies of which are included in my direct case in the above-captioned proceeding as Exhibit No. 30. These tapes were recorded in the Jukebox Radio studio in Dumont, New Jersey, using off-the-shelf recording equipment. As labeled, side A of one tape is a recording of Jukebox Radio programming received directly off the air from translator W276AQ, Fort Lee, New Jersey, transmitting on 103.1 MHz, while it was receiving that programming directly off the air, or "directly through space," from the signal of WJUX(FM), Monticello, New York, which was transmitting on 99.7 MHz. Side A of the other tape is a recording of Jukebox Radio

programming received directly off the air from translator W276AQ, Fort Lee, New Jersey, transmitting on 103.1 MHz, while it was receiving that programming directly off the air, or "directly through space," from the signal of translator W232AL, Pomona, New York, which was transmitting on 94.3 MHz. Both of these recordings were taken directly off the air and their sound quality has not been artificially improved, enhanced or otherwise altered from what is heard off the air.

I state under penalty of perjury that the foregoing is true and correct.

Gerard A. Turro

November 10, 1997

Before the

FEDERAL COMMUNICATIONS COMMISSION

Washington, D.C. 20554

In re	)	
	)	
GERARD A. TURRO	)	MM Docket No. 97-122
	)	
For Renewal of License	)	File Nos. BRFT-970129YC
For FM Translator Stations	)	BRFT-970129YD
W276AQ(FM), Fort Lee, NJ, and	)	
W232AL(FM), Pomona, NY	)	
	)	
MONTICELLO MOUNTAINTOP	)	
BROADCASTING, INC.	)	
	)	
Order to Show Cause Why the	)	
Construction Permit for FM Radio	)	
Station WJUX(FM), Monticello, NY,	)	
Should Not Be Revoked	)	

To: Honorable Arthur I. Steinberg
Administrative Law Judge

VIDEO TAPE ATTACHMENT TO THE STATEMENT OF HERMAN E. HURST, JR.