Unbundled Network Elements

Utah / Mountain Bell-utah

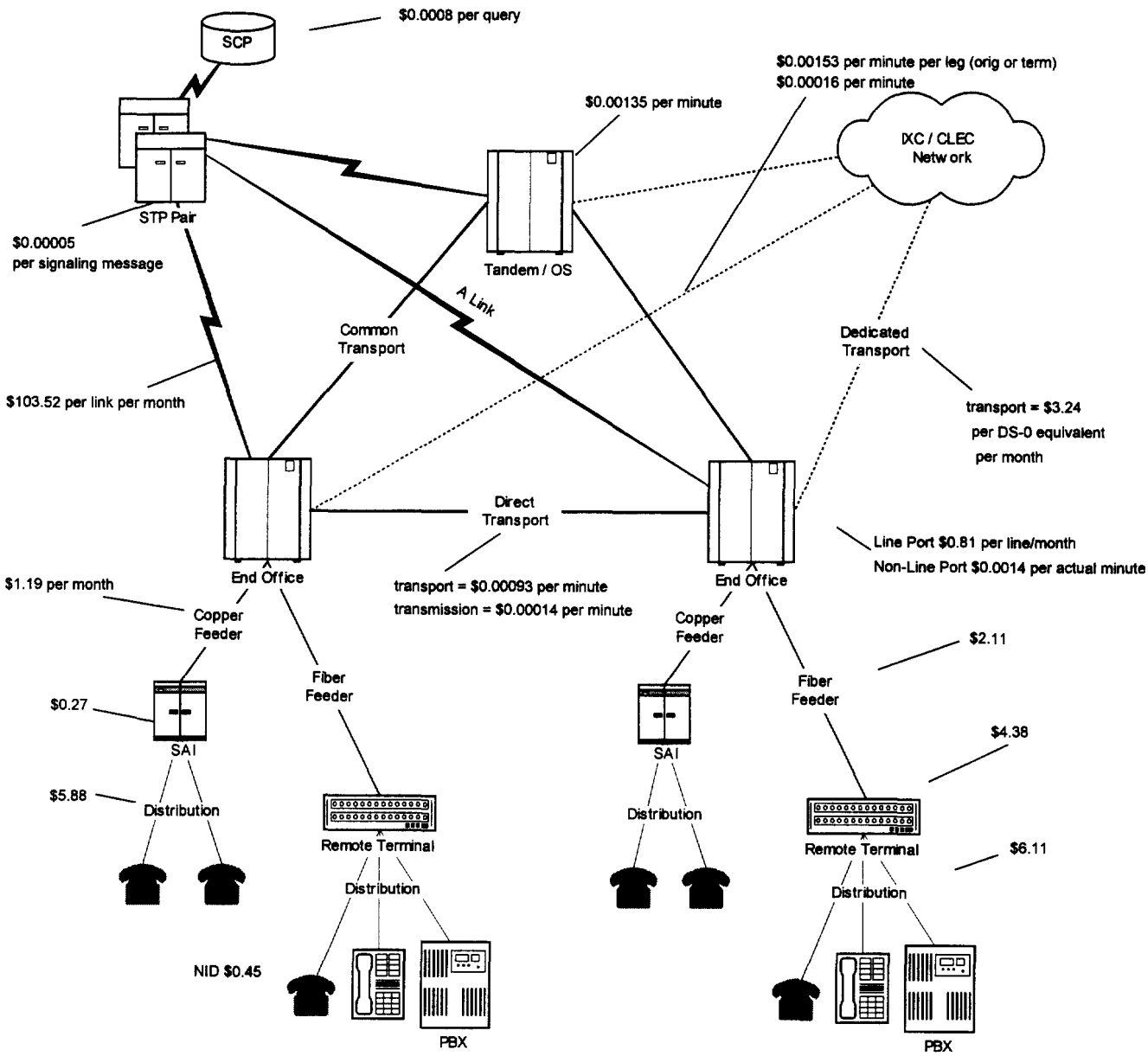

COST OF NETWORK ELEMENTS

Utah

Mountain Bell-Utah

Loop elements	0-5 lines/sq mi	5-100 lines/sq mi	100-200 lines/sq mi	200-650 lines/sq mi	650-850 lines/sq mi	850-2550 lines/sq mi	2550-5000 lines/sq mi	5000-10000 lines/sq mi	>10000 lines/sq mi	Totals
NID										
Annual Cost	$ 122,464	$ 405,405	$ 277,245	$ 614,514	$ 189,920	$ 2,138,343	$ 1,879,785	$ 892,411	$ 407,705	$ 6,927,791
Unit Cost/month	0.52	0.49	0.48	0.46	0.48	0.46	0.46	0.40	0.37	0.45
Loop Distribution (DLC)										
Annual Cost	$ 6,649,523	$ 9,641,607	$ 4,475,695	$ 9,543,842	$ 2,295,495	$ 23,534,630	$ 16,459,754	$ 7,493,517	$ 2,343,829	$ 82,437,892
Unit Cost/month	31.13	13.56	9.54	7.91	6.60	5.49	4.63	3.81	3.21	6.11
Loop Distribution (non-DLC)										
Annual Cost	$ 488,489	$ 1,617,552	$ 1,528,889	$ 1,301,391	$ 397,372	$ 2,099,772	$ 2,288,010	$ 940,439	$ 913,214	$ 11,575,129
Unit Cost/month	23.08	13.01	13.52	9.52	8.00	5.26	4.61	3.60	2.48	5.88
Loop Distribution (all)										
Annual Cost	$ 7,138,013	$ 11,259,159	$ 6,004,585	$ 10,845,233	$ 2,692,867	$ 25,634,402	$ 18,747,764	$ 8,433,956	$ 3,257,042	$ 94,013,021
Unit Cost/month	30.41	13.48	10.31	8.07	6.78	5.47	4.63	3.79	2.97	6.08
Loop Concentration (DLC)										
Annual Cost	$ 3,601,870	$ 5,227,513	$ 2,419,084	$ 5,188,297	$ 1,443,781	$ 17,066,584	$ 14,132,445	$ 7,307,560	$ 2,674,917	$ 59,062,050
Unit Cost/month	16.86	7.35	5.16	4.30	4.15	3.98	3.98	3.72	3.66	4.38
Loop Concentration (non-DLC)										
Annual Cost	$ 60,695	$ 72,118	$ 175,555	$ 30,746	$ 17,316	$ 55,885	$ 51,859	$ 28,139	$ 31,155	$ 523,467
Unit Cost/month	2.87	0.58	1.55	0.22	0.35	0.14	0.10	0.11	0.08	0.27
Loop Concentration (all)										
Annual Cost	$ 3,662,565	$ 5,299,631	$ 2,594,639	$ 5,219,042	$ 1,461,096	$ 17,122,469	$ 14,184,304	$ 7,335,699	$ 2,706,072	$ 59,585,517
Unit Cost/month	15.60	6.34	4.46	3.89	3.68	3.65	3.50	3.29	2.46	3.86
Loop Feeder (DLC)										
Annual Cost	$ 7,823,116	$ 7,068,970	$ 1,493,289	$ 2,287,875	$ 514,442	$ 4,096,916	$ 2,974,872	$ 1,652,359	$ 493,961	$ 28,405,800
Unit Cost/month	36.63	9.94	3.18	1.90	1.48	0.96	0.84	0.84	0.68	2.11
Loop Feeder (non-DLC)										
Annual Cost	$ 137,200	$ 334,507	$ 191,020	$ 210,000	$ 65,435	$ 460,761	$ 485,368	$ 234,670	$ 229,362	$ 2,348,324
Unit Cost/month	6.48	2.69	1.69	1.54	1.32	1.15	0.98	0.90	0.62	1.19
Loop Feeder (all)										
Annual Cost	$ 7,960,317	$ 7,403,477	$ 1,684,309	$ 2,497,875	$ 579,877	$ 4,557,677	$ 3,460,240	$ 1,887,029	$ 723,323	$ 30,754,124
Unit Cost/month	33.91	8.86	2.89	1.86	1.46	0.97	0.85	0.85	0.66	1.99
Total Loop (DLC)										
Annual Cost	$ 18,185,931	$ 22,283,137	$ 8,611,475	$ 17,571,999	$ 4,419,908	$ 46,654,377	$ 35,216,489	$ 17,241,259	$ 5,783,783	$ 175,968,357
Unit Cost/month	85.15	31.34	18.36	14.56	12.71	10.88	9.91	8.77	7.92	13.05
Total Loop (non-DLC)										
Annual Cost	$ 697,427	$ 2,084,534	$ 1,949,302	$ 1,604,666	$ 503,852	$ 2,798,513	$ 3,055,605	$ 1,307,837	$ 1,310,359	$ 15,312,095
Unit Cost/month	32.95	16.76	17.24	11.74	10.15	7.01	6.16	5.01	3.56	7.77
Total Loop (all)										
Annual Cost	$ 18,883,358	$ 24,367,671	$ 10,560,777	$ 19,176,664	$ 4,923,760	$ 49,452,890	$ 38,272,093	$ 18,549,096	$ 7,094,142	$ 191,280,452
Unit Cost/month	80.44	29.17	18.14	14.28	12.39	10.55	9.45	8.33	6.46	12.38
Total lines	19,562	69,610	48,515	111,941	33,115	390,493	337,527	185,619	91,520	1,287,901
Total lines served by DLC	17,798	59,246	39,094	100,550	28,978	357,239	296,163	163,865	60,850	1,123,783

	Annual Cost	Units		Unit Cost	
End office switching	$ 33,468,401				
Line Port	10,040,520	1,031,021	switched lines	$ 0.81	per line/month
Non-Line Port	23,427,880	16,851,221,129	actual minutes	$ 0.00139	per actual minute (for rate per DEM, see "Cost detail" sheet)
Signaling network elements	$ 1,719,955				
Links	296,473	239	links	$ 103.52	per link per month
STP	713,986	15,691,397,044	TCAP+ISUP msgs	$ 0.00005	per signaling message
SCP	709,497	868,176,000	TCAP queries	$ 0.00082	per query
Transport network elements					
Dedicated					
Sw+Sp Transport	$ 11,220,650	288,673	trunks	$ 3.24	per DS-0 equivalent per month
Switched	1,235,820	31,794	trunks	$ 0.00032	per minute
Special	9,984,830	256,879	trunks		
Transmission Terminal	4,272,814	288,673	trunks	$ 1.23	per DS-0 equivalent per month
				$ 0.00012	per minute
				$ 0.00045	total per minute
Common					
Transport	$ 1,963,397	1,240,271,987	minutes	$ 0.00153	per minute per leg (orig or term)
Transmission Terminal	205,965	1,240,271,987	minutes	$ 0.00016	per minute
				$ 0.00169	total per minute
Direct					
Transport	$ 3,893,210	4,202,489,051	minutes	$ 0.00093	per minute
Transmission Terminal	603,043	4,202,489,051	minutes	$ 0.00014	per minute
				$ 0.00107	total per minute
Tandem switch	$ 1,389,974	1,032,611,029	minutes	$ 0.00135	per minute
Operator systems	$ 6,485,585				
Public Telephones	$ 3,110,756				
Total (w/ Public)	$ 259,614,202				
Total cost of switched network elements (w/o Public)	$ 16.53	per line/month			

Universal Service Calculation Sheet - monthly costs per line

Utah
Mountain Bell-Utah

	0 - 5 lines/sq mi	5 - 100 lines/sq mi	100 - 200 lines/sq mi	200 - 650 lines/sq mi	650 - 850 lines/sq mi	850 - 2,550 lines/sq mi	2,550 - 5,000 lines/sq mi	5,000 - 10,000 lines/sq mi	> 10,000 lines/sq mi	Weighted Average
Local network costs										
Loop	$ 80.60	$ 29.23	$ 18.18	$ 14.30	$ 12.41	$ 10.57	$ 9.47	$ 8.34	$ 6.47	$ 12.69
Port	0.81	0.81	0.81	0.81	0.81	0.81	0.81	0.81	0.81	0.81
End office usage	1.28	1.28	1.28	1.28	1.28	1.28	1.28	1.28	1.28	1.28
Signaling	0.03	0.03	0.03	0.03	0.03	0.03	0.03	0.03	0.03	0.03
Transport	0.35	0.35	0.35	0.35	0.35	0.35	0.35	0.35	0.35	0.35
Local retail costs										
Billing/bill inquiries	$ 1.44	$ 1.44	$ 1.44	$ 1.44	$ 1.44	$ 1.44	$ 1.44	$ 1.44	$ 1.44	$ 1.44
Directory listing	0.18	0.18	0.18	0.18	0.18	0.18	0.18	0.18	0.18	0.18
LNP expense (when available)	0.29	0.29	0.29	0.29	0.29	0.29	0.29	0.29	0.29	0.29
	-	-	-	-	-	-	-	-	-	-
	-	-	-	-	-	-	-	-	-	-
	-	-	-	-	-	-	-	-	-	-
Basic Local Service										
Avg monthly cost per line	**$ 84.98**	**$ 33.61**	**$ 22.55**	**$ 18.68**	**$ 16.79**	**$ 14.95**	**$ 13.84**	**$ 12.72**	**$ 10.85**	**$ 17.07**
@ Residence usage per line	**$ 84.88**	**$ 33.51**	**$ 22.46**	**$ 18.59**	**$ 16.70**	**$ 14.86**	**$ 13.75**	**$ 12.63**	**$ 10.75**	**$ 17.52**
@ Business usage per line	**$ 85.23**	**$ 33.86**	**$ 22.80**	**$ 18.93**	**$ 17.04**	**$ 15.20**	**$ 14.10**	**$ 12.97**	**$ 11.10**	**$ 15.87**
Total switched lines	17,605	59,623	40,722	91,001	28,172	318,272	278,863	134,441	62,335	1,031,035
Primary residence lines	13,968	42,882	28,418	59,531	19,711	206,676	185,700	67,432	25,724	650,041
Secondary residence lines	1,475	5,737	3,720	8,407	3,017	32,053	28,554	10,642	4,468	98,074
Single line business lines	427	2,558	1,779	3,851	1,238	13,695	11,913	8,197	3,170	46,828
Multline business lines	1,669	8,142	6,570	18,584	4,058	63,683	50,939	46,636	28,099	228,381
Public lines	59	299	233	627	148	2,164	1,758	1,533	874	7,696
FEDERAL FUND ANALYSIS										
Annual Support for line types: Specify / Bench mark										
Primary residence lines X $31.00	$ 9,031,433	$ 1,291,707	$ -	$ -	$ -	$ -	$ -	$ -	$ -	$ 10,323,140
Secondary residence lines $31.00	$ 953,702	$ 172,822	$ -	$ -	$ -	$ -	$ -	$ -	$ -	$ 1,126,524
Single line business lines X $51.00	$ 175,428	$ -	$ -	$ -	$ -	$ -	$ -	$ -	$ -	$ 175,428
Multline business lines $51.00	$ 685,670	$ -	$ -	$ -	$ -	$ -	$ -	$ -	$ -	$ 685,670
Public lines $51.00	$ 24,081	$ -	$ -	$ -	$ -	$ -	$ -	$ -	$ -	$ 24,081
Support cost if all lines supported	$ 10,870,315	$ 1,464,528	$ -	$ -	$ -	$ -	$ -	$ -	$ -	$ 12,334,844
Total annual support for specified lines	**$ 9,206,861**	**$ 1,291,707**	**$ -**	**$ -**	**$ -**	**$ -**	**$ -**	**$ -**	**$ -**	**$ 10,498,568**
@25% Federal allocation	$ 2,301,715	$ 322,927	$ -	$ -	$ -	$ -	$ -	$ -	$ -	$ 2,624,642
@Implied 75% State allocation	$ 6,905,146	$ 968,780	$ -	$ -	$ -	$ -	$ -	$ -	$ -	$ 7,873,926

Total Annual Support for Primary Residence Lines at Pre-Selected Monthly Benchmarks

$20.00	$ 10,875,200	$ 6,952,068	$ 837,892	$ -	$ -	$ -	$ -	$ -	$ -	$ 18,665,160
$30.00	$ 9,199,048	$ 1,806,285	$ -	$ -	$ -	$ -	$ -	$ -	$ -	$ 11,005,333
$40.00	$ 7,522,896	$ -	$ -	$ -	$ -	$ -	$ -	$ -	$ -	$ 7,522,896
$50.00	$ 5,846,744	$ -	$ -	$ -	$ -	$ -	$ -	$ -	$ -	$ 5,846,744
$60.00	$ 4,170,592	$ -	$ -	$ -	$ -	$ -	$ -	$ -	$ -	$ 4,170,592
$70.00	$ 2,494,440	$ -	$ -	$ -	$ -	$ -	$ -	$ -	$ -	$ 2,494,440
$80.00	$ 818,288	$ -	$ -	$ -	$ -	$ -	$ -	$ -	$ -	$ 818,288

STATE FUND ANALYSIS													
Annual Support for line types:	**Specify**	**Bench mark**											
Primary residence lines	X	**$31.00**	$ 9,031,433	$ 1,291,707	$ -	$ -	$ -	$ -	$ -	$ -	$ -	$ 10,323,140
Secondary residence lines		**$31.00**	$ 953,702	$ 172,822	$ -	$ -	$ -	$ -	$ -	$ -	$ -	$ 1,126,524
Single line business lines	X	**$51.00**	$ 175,428	$ -	$ -	$ -	$ -	$ -	$ -	$ -	$ -	$ 175,428
Multline business lines		**$51.00**	$ 685,670	$ -	$ -	$ -	$ -	$ -	$ -	$ -	$ -	$ 685,670
Public lines		**$51.00**	$ 24,081	$ -	$ -	$ -	$ -	$ -	$ -	$ -	$ -	$ 24,081
Support cost if all lines supported			$ 10,870,315	$ 1,464,528	$ -	$ -	$ -	$ -	$ -	$ -	$ -	$ 12,334,844
Total annual support for specified lines			**$ 9,206,861**	**$ 1,291,707**	$ -	$ -	$ -	$ -	$ -	$ -	$ -	**$ 10,498,568**
@75% State allocation			$ 6,905,146	$ 968,780	$ -	$ -	$ -	$ -	$ -	$ -	$ -	$ 7,873,926
@Implied 25% Federal allocation			$ 2,301,715	$ 322,927	$ -	$ -	$ -	$ -	$ -	$ -	$ -	$ 2,624,642

Module release date: 11/4/97

COST SUMMARY

Florida
Central Tel Co Of Florida

			1	2	1 + 2	3	1 + 2 + 3	
NID	$ 10,115,932	2.2%	$ 1,460,205	$ 262,234	$ 1,722,439	$ 593,946	$ 593,946	$ 2,337,426
Distribution (DLC)	112,548,743	25.0%	16,242,621	10,208,832	26,451,454	9,121,216	9,121,216	35,823,869
Distribution (non-DLC)	11,738,600	2.6%	1,694,053	1,052,953	2,747,006	947,246	947,246	3,724,790
Distribution (all)	124,287,344	27.6%	17,936,674	11,261,785	29,198,459	10,068,462	10,068,462	39,548,659
Concentrator (DLC)	94,668,663	21.0%	17,143,279	1,509,672	18,652,951	6,432,070	6,432,070	25,275,189
Concentrator (non-DLC)	355,480	0.1%	52,802	13,156	65,959	22,744	22,744	89,614
Concentrator (all)	95,024,143	21.1%	17,196,082	1,522,828	18,718,910	6,454,814	6,454,814	25,364,803
Feeder (DLC)	104,983,837	23.3%	14,615,409	8,998,609	23,614,018	8,142,787	8,142,787	31,862,632
Feeder (non-DLC)	4,168,603	0.9%	603,242	361,836	965,078	332,787	332,787	1,307,782
Feeder (all)	109,152,439	24.3%	15,218,651	9,360,446	24,579,097	8,475,574	8,475,574	33,170,414
End Office Switching	51,597,998	11.5%	7,568,332	2,779,583	10,347,914	3,903,113	14,251,027	15,854,755
Signaling	4,057,112	0.9%	600,219	172,744	772,964	269,589	1,042,553	1,158,996
Dedicated Transport	17,291,628	3.8%	2,398,827	1,051,594	3,450,421	875,645	4,326,067	4,795,260
Dedicated Transport Transmission	5,981,345	1.3%	1,089,124	91,515	1,180,639	448,081	1,628,719	1,812,181
Direct Transport	9,737,245	2.2%	1,352,335	583,731	1,936,066	409,112	2,345,178	2,596,024
Direct Transport Transmission	948,353	0.2%	172,683	14,510	187,192	56,207	243,399	270,202
Common Transport	5,145,137	1.1%	714,739	308,513	1,023,252	211,144	1,234,396	1,366,207
Common Transport Transmission	396,932	0.1%	72,276	6,073	78,349	21,491	99,841	110,747
Tandem Switching	5,766,636	1.3%	805,380	666,941	1,472,321	577,988	2,050,309	2,281,981
Operator Systems	8,090,435	1.8%	1,193,071	1,987,096	3,180,167	781,677	3,961,844	4,409,838
Public Telephone	2,340,121	0.5%	473,129	583,783	1,056,912	287,032	1,343,944	1,498,312

							Total Network Cost	
Total	$ 449,932,802	100%	$ 68,251,727	$ 30,653,375	$ 98,905,102	$ 33,433,876	$ 58,120,074	$ 136,575,803

* Post sharing

Hatfield Model v 5.0

NARUC Annual Convention

Boston, Massachusetts

November 7, 1997

What's New in 5.0?

- Dramatically improved accuracy in determining customer locations
- Improved engineering of distribution and feeder networks
- Enhanced switching, signaling, and interoffice transport network calculations
- Increased flexibility in assigning expenses, determining Universal Service support

Customer Location

- Data sources exist that permit geocoding of actual residence and business locations
- This permits plotting of customer locations within a wire center, and the engineering of distribution plant to serve the precise areas where customers are located
- Does not rely on arbitrary segmentation of customers into Census Bureau geographical boundaries or arbitrarily defined grid cells

Customer Location Data Sources

- Metromail Residential Data
  - File of deliverable postal addresses and telephone numbers
  - Contains over 100 million household records
  - Covers over 90% all U.S. households
  - Updated continuously
- Dun & Bradstreet Business Data
  - Information on more than 11 million business establishments
  - Postal addresses
  - Telephone numbers
  - Counts of employees
  - Standard Industrial Classification (SIC) codes

Geocoding Process

- These 110 million customer records are assigned latitude and longitude coordinates (geocodes) accurate to within 50 feet
- Current coverage of about 80%
- "Unlocated" customers are assumed to be placed uniformly along the periphery of the CB and the geocodes implied by these placements are added to the dataset
- Assures that the dataset contains geocodes for 100% of the target number of customer locations by CB

PNR Clustering Algorithm

- Determines the customer locations that are close enough together to be served by a single distribution area
- Engineering requirements for clusters:
  - No point in a cluster may be more than 18 kft. distant from the cluster's centroid
  - No cluster may exceed 1800 lines in size

Hayden CO
Wire Center Clusters
at 1 mile out and Min 5

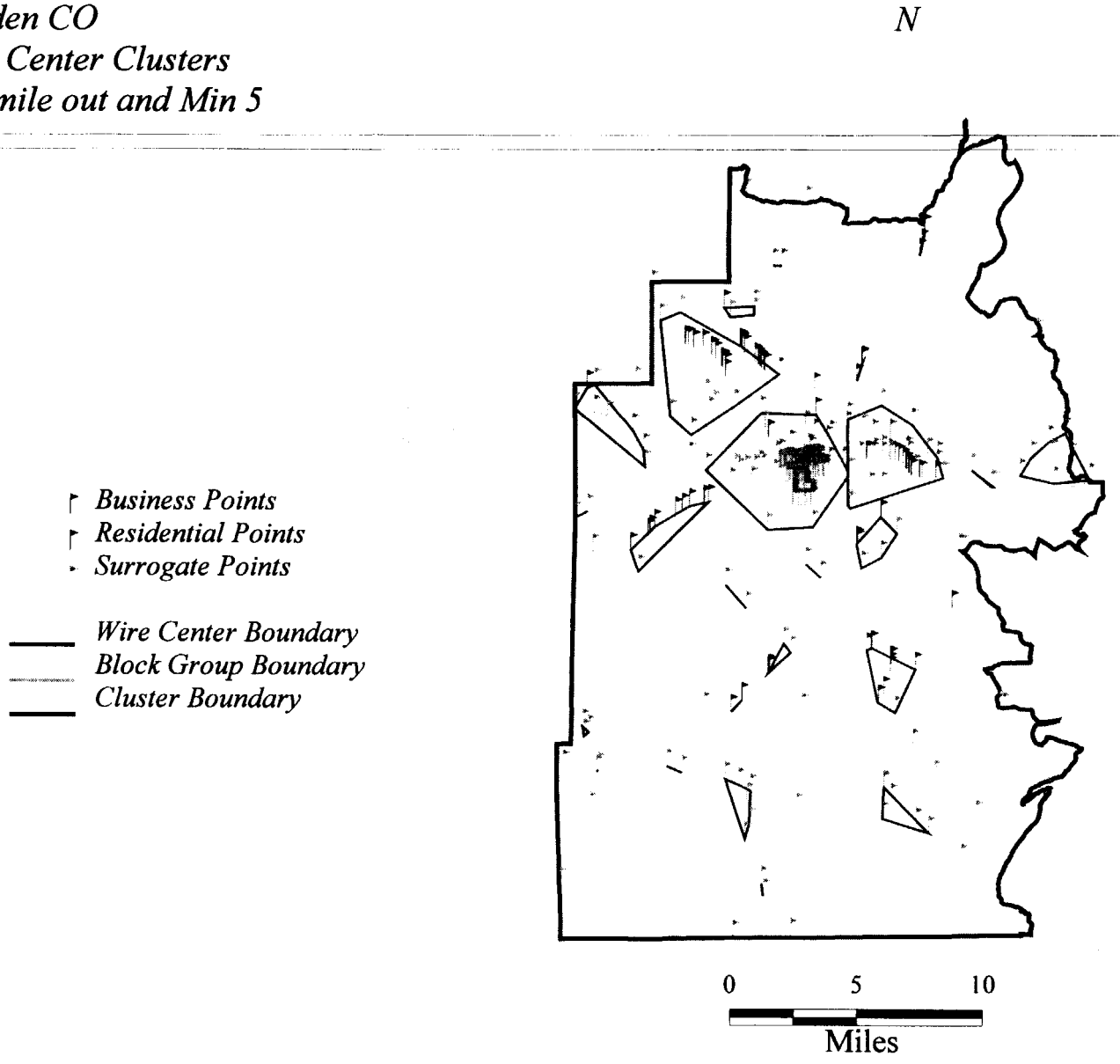

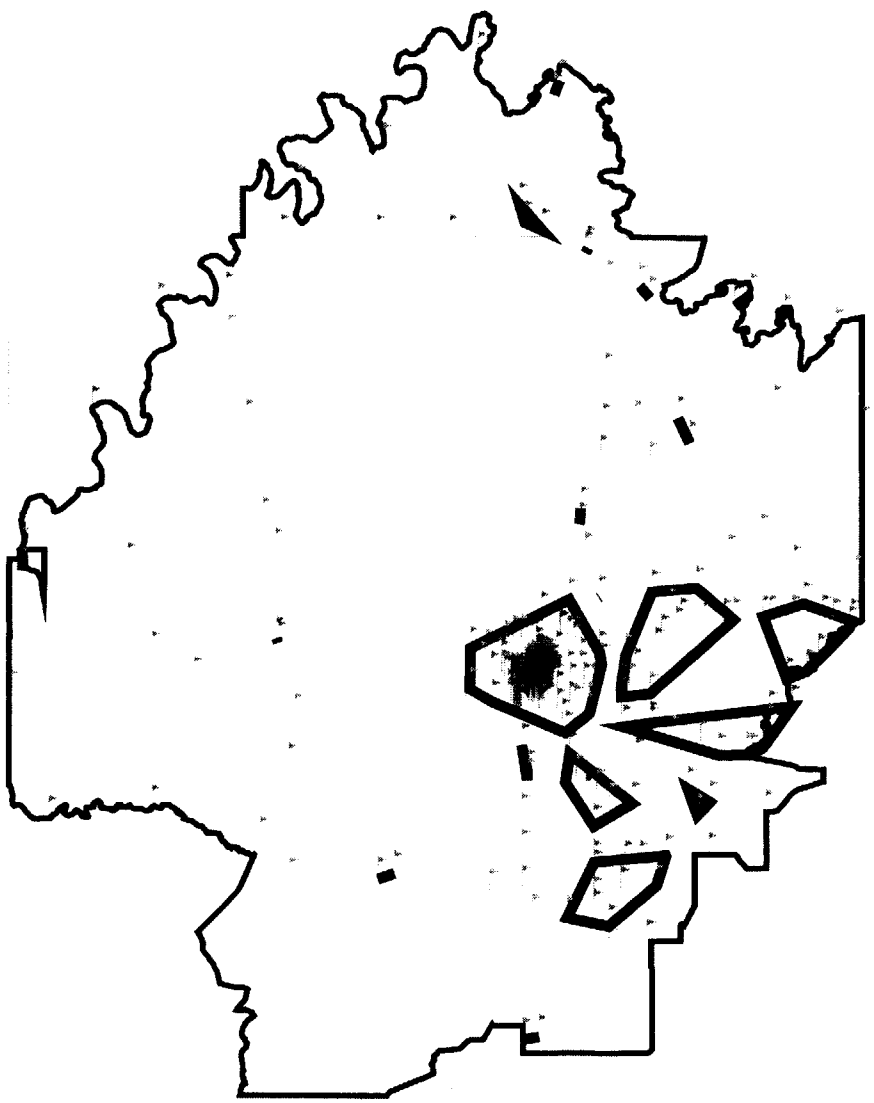

Albany TX
Wire Center Clusters

At 1 mile out and minimum cluster size 5

Business Points
Residential Points
Surrogate Points

Cluster Boundary
Wire Center Boundary
Block Group Boundary

0 5 10
Miles

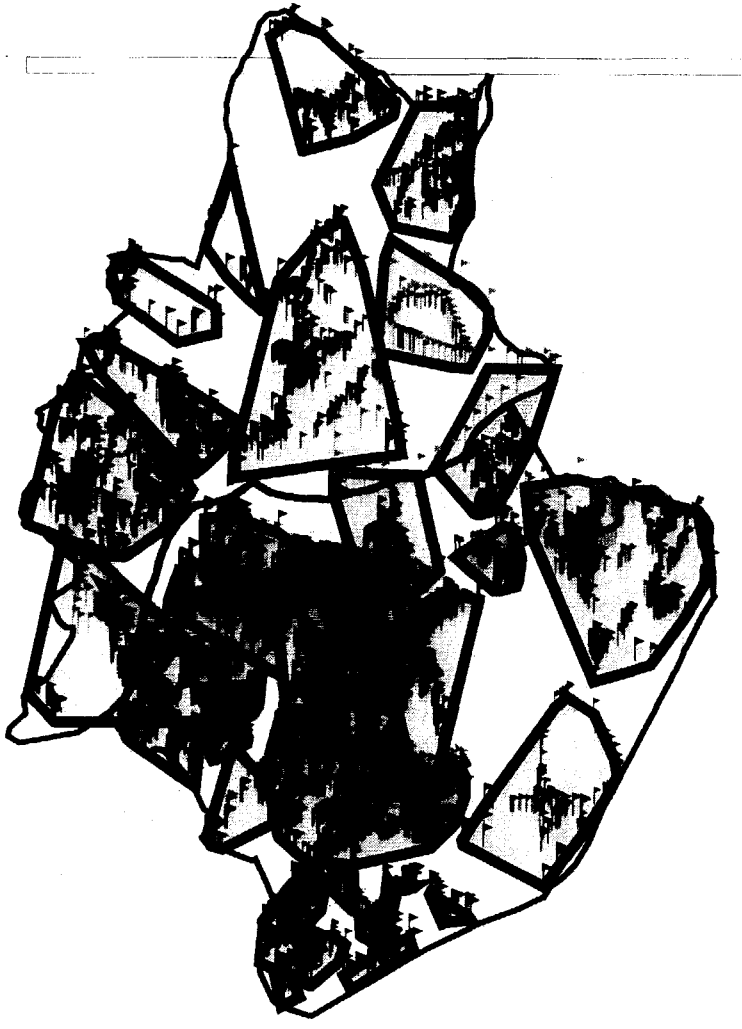

Duluth GA
Wire Center Cluster

At 1 mile out and minimum cluster size of 5

- Business Points
- Residential Points
- Surrogate Points

- Cluster Boundary
- Wire Center Boundary
- Block Group Boundary

0 2 4
Miles

Customer Location

- All information currently contained in HM4 database is reported for each cluster
- Clusters replace the CBG as unit of analysis in HM5

Distribution Module

- The HM5 Distribution Module takes as input for each wire center records describing the clusters within the wire center service area
  - Location of cluster centroids
  - Aspect ratio of lengths of major and minor axes
  - Line counts
- Engineering
  - Backbone and branch cables are engineered to "cover" the cluster
  - SAIs and DLCs are placed at cluster centroids
  - Distant outliers are served via digital copper T-1 cables

Loop Engineering Example

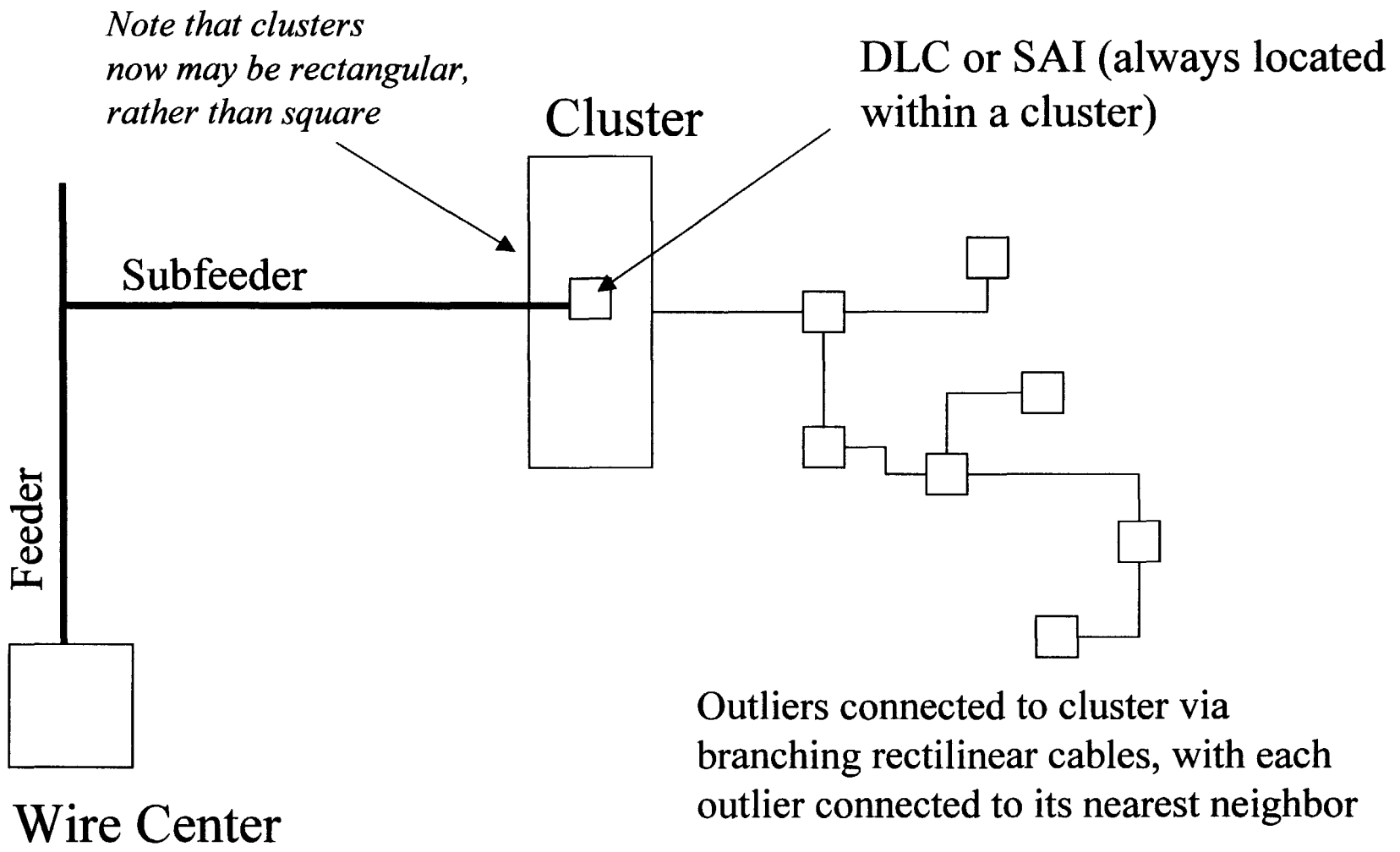

Optimization of Feeder Technology

- Feeder is always fiber if analog copper distance would exceed 18 kft.
- If total distance is less than 18 kft.
  - For each cable route cost of fiber feeder and copper feeder are evaluated separately
  - Choice of copper feeder and fiber feeder is made dynamically based on least cost technology
  - Accounts for total life-cycle cost of facility, including depreciation and maintenance

Optimization of Structure Type

- For each cable route, the costs of buried versus aerial cable are evaluated separately
- Default proportions of each plant type are considered, but a user-adjustable proportion of total plant can "swing" from one structure type to another
- Within the "swing" fraction, the amount of structure type substitution increases as relative cost differential between the structure types increases
- Underground plant is unaffected by this calculation

Optimization of Feeder Routing

- Feeder optionally will be routed more directly toward customer clusters - rather than rectilinearly

Switching Costs

- Model now determines costs separately for host, remote, and stand alone switches
- Investment in host/remote combinations distributed equally among all lines served by the combination
- Cost of umbilical trunks between remotes and hosts modeled explicitly

Interoffice Network Costs

- All wire centers may now (at the user's option) be located on SONET rings
  - In HM4, smaller offices were required to be trunked directly to the tandem on SONET fiber
- Interoffice route distances are now calculated explicitly
  - In HM4, interoffice distances were estimated based on distance across the exchange area

Expense Module Changes

- USF calculations now permit separate calculation of state and federal funds, using different benchmarks and selections of supported services for each
- Some categories of expenses can now be assigned either according to direct costs, or on a per-loop basis
  - General Support
  - Network Operations
  - Variable Overheads
- Output report showing results by Part 32 USOA account

Input Data Changes

- 1996 ARMIS data is now used for
  - calculation of expense/investment ratios
  - network usage (DEMs and call attempts)
- Alaska (Anchorage) and Puerto Rico are now included