and wind storms. These areas and the design load data for each are defined below. (Maps and tables follow which provide additive factors) (10-7)

DIGITAL LOOP CARRIER SYSTEMS

- *The goal is to have the entire local loop network ultimately capable of supporting a transmission rate of 64 kb/sec. Nonloaded 26-gauge cable is capable of providing this bit rate within 12,000 feet of the serving central office. Digital subscriber carrier is necessary to meet that bit rate beyond 12,000 feet. (13-1)*

IV. THE CARRIER SERVING AREA (CSA) CONCEPT

It is not practical for the engineer to individually design the transmission characteristics of each central office area. For this reason, design standards or "rules-of-thumb" are developed and used throughout the telephone industry. Not only do these rules simplify the design process, but they also provide guidance for equipment manufacturers for the design of their products which are the building blocks of the network. They also assure that when loops are connected to networks in other parts of the country, or even in other parts of the world, that the resulting circuit will provide satisfactory end-to-end transmission.

Up until the 1980s, local networks were based on a standard called "Resistance Design". Loops over a given length (most recently 18 Kft) were "loaded" with electrical coils which preserved the quality of voice transmission. The emergence of digital services during the early 1980s presented a problem, however, since loaded loops do not pass digital signals. In their May 8, 1997 Universal Service Decision, the Commission recognized this reality and directed that load coils were not compatible with the type of network and service architecture which the 1996 Act requires and with a forward-looking economic cost study:

The loop design incorporated into a forward-looking economic cost study or model should not impede the provision of advanced services. For example, loading coils should not be used because they impede the provision of advanced services.[1]

The Carrier Serving Area (CSA) concept was specifically designed to allow for access to advanced telecommunications services within the context of an efficient local exchange distribution network. The goal of the CSA architecture is to have all loops in the network capable of supporting a transmission rate of 64 Kbps. This is achieved by utilizing 26 gauge copper facilities to serve customers within 12,000 of the central office, and serving customers beyond this distance from a Digital Loop Carrier (DLC) system connected to the central office by fiber facilities. A CSA is a distinct geographic area capable of being served by a DLC Remote Terminal (RT). The CSA design specifications provide that no loop can exceed 900 ohms of resistance, which generally equates to 9,000 feet of 26 gauge copper or 12,000 feet of 34 gauge copper facilities. Extended range line cards are available which extend the range of the RT to 1500 ohms, however the line cards to support this extended range cost roughly twice what the standard line card costs.[2] Other line cards are available which support the access to various levels of advanced services.

As the CSA architecture has become the design standard used by most local exchange carriers, it has also become the standard to which equipment manufacturers design their

[1] Report and Order in CC Docket 96-45 Adopted May 7, 1997, Released May 8, 1997 at Paragraph 250.
[2] In Attachment 3 to this filing, the BCPM sponsors present runs of BCPM3 which were made using an 18,000 ft maximum copper loop design standard (similar to that employed in the Hatfield Model) for five test states. In four of the five states analyzed (FL, GA, MD, and MT) the 12,000 ft standard produced a lower investment than the 18,000 ft standard. In the fifth state (MO) the results were identical. This is so since the apparent savings from having the RT serve a larger area are more than offset by the extra costs associated with extended range line cards and the greater use of 24 gauge cable.

products. As such, a network designed to different specifications would require non-standard equipment which would cost substantially more. Indeed, the ubiquity of the CSA standard and the scale of manufacturing capacity that this has created has significantly driven down the cost of DLC equipment, making it the most efficient vehicle for providing basic telephone service with access capability to advanced services.

V. WHAT IS REQUIRED TO PROVIDE ACCEPTABLE VOICE GRADE SERVICE AND 28.8 Kbps FUNCTIONALITY?

In December of 1996, Bellcore published a Technical Memorandum (TM-25704) which provided a methodology for estimating the maximum modem speed that can be maintained by a V.34 depending on various factors of the circuit over which the modem transmission occurs. The results of their analysis are summarized in Figure I, below, a full copy of the Technical Memorandum appears at the end of this section.

Figure I - Predicted Modem Speeds

			POINTS
1. CUSTOMER LOOP (each end)			
0 - 9 Kft NL = 0	9 - 12 Kft NL = 1	12 - 18 Kft NL = 3	_____
18- 24 Kft L = 7	24 - 30 Kft L = 10	> 30 Kft L = 12	_____
2. LOOP CARRIER (each end)			_____
No DLC = 0	IDLC = 2	UDLC = 6	_____
3. SWITCH TYPE (each end)			_____
Analog = 0	Digital = 1		_____
4. INTEROFFICE			
Digital Route = 2	Analog Tandem = 4	B/B - Cxr = 6	_____
			[ ]

SCORING:			
0 - 6 = 28.8 Kbps	7 - 9 = 26.4 Kbps	10 - 13 = 24.0 Kbps	14 - 16 = 21.6 Kbps
17 - 20 = 19.2 Kbps	21 - 25 = 14.4 Kbps	26 - 30 = 9.6 Kbps	

As can be seen, there are seven factors which determine the maximum speed which can be achieved - the loop on both ends of the circuit, the presence of Digital Loop Carrier on the two loops, the type of switch on either end of the circuit, and the type of circuit connecting the two central offices. Depending on the characteristics of each of these seven components, points are awarded. The number of points for the total circuit determines the maximum modem speed which can be maintained.

The relevance of this chart can be seen in the line relating to the customer loop. Loops under 9 Kft receive no points, loops from 9 to 12 Kft receive 1 point, while loops from 12 to 18 Kft receive 3 points. Since anything over six points prevents the achievement of the 28.8 Kbps speed, a design standard which routinely utilizes loops over 12 Kft can use up the full point allotment on the loop alone, even without consideration of the digital loop carrier (which will be utilized for most, if not all, rural customers), the central office switches and the interoffice transmission facility.

By utilizing the DSC architecture and the maximum 12 Kft copper loop, BCPM3 assures that the requirements for advanced telecommunications service access for remote rural customers is reasonably comparable to that enjoyed by urban customers, as mandated in the 1996 Act.

Bellcore
Bell Communications Research

Memorandum Abstract

ASD-14
(1-95

Memorandum Number (IM or TM)	Title
TM-25704	Guidelines for High Speed Analog Data Transmission in the Switched Network
Memorandum Completion Date: December 1996	

Software/Product Name: | Release No.:

Project No.	WP/Task	Project No.	WP/Task	Project No.	WP/Task	Project No.	WP/Task	Project No.	WP/Task
422241	01	5W3650	01	5W3651	01	6A3624	01		

Contact/SME(s)	Org. Code(s)	Loc. Code & Room No.(s)	Tel No.(s)
Ricardo J. Perez	331H0	MCC 1F131G	201-829-2960

Proprietary Status

- _ Bellcore Proprietary - Internal Use Only
- _ Bellcore and (Listed Entities) Proprietary - Internal Use Only
- _ Bellcore Confidential - Restricted Access
- _ Bellcore and (Listed Entities) Confidential - Restricted Access
- _ Bellcore Confidential - Addressee Only
- _ Bellcore and (Listed Entities) Confidential - Addressee Only
- X Non-Proprietary

Licensed Status: _ Licensed Material - Property of Bellcore

Listed Entities - Information Also Proprietary/Confidential To:

__ Ameritech __ NYNEX __ U S West _ Other
__ Bell Atlantic _ Pacific Bell __SNET
__ BellSouth __ Southwestern Bell __CBI

Entitled Companies

_ Ameritech __ NYNEX _ U S West _ Other
_ Bell Atlantic _ Pacific Bell _ SNET
_ BellSouth _ Southwestern Bell _ CBI

Subsidiaries Not Entitled

Abstract (Abstract Text, Author Signature(s), Copy to Information)

This technical memorandum (TM) discusses guidelines for high speed analog data transmission on a switched network that reflects the transmission impairments associated with today's network configurations and new high speed modem technologies.

Ricardo J. Perez
Systems Engineer
Network Transport and Synchronization

GUIDELINES FOR HIGH SPEED ANALOG DATA TRANSMISSION IN THE SWITCHED NETWORK

CONTENTS

1. INTRODUCTION **1**

2. V.34 FEATURES **2**

2.1 V.34 VS. V.32BIS COMPARISON 2
2.2 V.34 FEATURES 2
2.2.1 Mode Negotiation Handshake *2*
2.2.2 Line Probing *3*
2.2.3 Precoding *4*
2.2.4 Adaptive Pre-Emphasis *4*
2.2.5 Adaptive Power Control *4*
2.2.6 Multi-Dimensional Trellis Coding *4*
2.2.7 Shell Mapping (Shaping) *6*
2.2.8 Warping (a.k.a. Non-linear Encoding) *7*
2.2.9 Implementation *7*

3. TRANSMISSION PARAMETERS FOR V.34 MODEMS **8**

3.1 BANDWIDTH REQUIREMENTS FOR DATA RATE SELECTION 8
3.2 RECEIVE LEVEL (CARRIER DETECT) 8
3.3 NOISE REQUIREMENT 9

4. LOCAL OBSERVATIONS **9**

5. MODEM TESTING **10**

5.1 SYSTEM CONFIGURATION 10
5.2 TEST PROCEDURES 11
5.3 RESULTS 11
5.3.1 Tests with PCM Conversions *11*
5.3.2 Local Cable Tests *11*

6. GENERAL ASSUMPTIONS **12**

7. CONCLUSIONS **13**

8. REFERENCES **13**

GUIDELINES FOR HIGH SPEED ANALOG DATA TRANSMISSION IN THE SWITCHED NETWORK

R. J. Perez

1. Introduction

This technical memorandum (TM) discusses guidelines for high speed analog data transmission on a switched network that reflects the transmission impairments associated with today's network configurations and new high speed modem technologies.

The original scope of this document was to indicate procedures for the local telephone companies to allow their customers to run V.34[1] modems at the highest data rate of 28,800 bits per second (bps). It became apparent that this is not always possible. It may never be possible depending on how each customer's service is provided to them and how the network routes each call to the far end. In many cases, it will be to an Internet Service Provider (ISP), and their facilities will influence the overall data connection. It will also depend on the modems that are being used.

V.34 technology is based on assumptions and compromises that the local telephone companies have no control over. However, an understanding of how V.34 modems make the connection will take some of the mystery out of the black box.

Laboratory tests were conducted to determine the effects of analog to digital (A/D) and digital to analog (D/A) conversions on V.34 modem connections. Also, various cables lengths with bridged-taps (BT) were put under test to understand their effects on data rate connections. A chart has been developed in an attempt to quantify the effects of the telephone network on any given connection.

2. V.34 Features

2.1 V.34 vs. V.32bis Comparison

As with the V.32bis specification, V.34 defines a 2 wire, full duplex dial and lease line modem supporting both synchronous and asynchronous operations. Likewise, the specification calls for automatic fallback compatibility with lower speed modems such as V.32 and V.22bis.

A brief comparison of the differences are listed below:

	V.32bis	V.34
Modem Type	Fixed Modulation	Adaptive Intelligence
Data Rates	14.4 kbps - 7.2 kbps	28.8 kbps - 2400 bps
Bandwidth	Fixed	Variable
Trellis Coding	2-dimensional	4-dimensional
Adaptive Equalization	Linear	Precoding
Mapping	2-D Shell Mapping	16-D Shell Mapping
Auxiliary Channel	None	200 bps
Operating Modes	Full Duplex Half Duplex (Fax)	Full Duplex Half Duplex (Fax) Asymmetric

2.2 V.34 Features

These are the new features of V.34 modems that will respond to the telephone network:

1. Negotiation handshake
2. Line Probing
3. Precoding
4. Adaptive Pre-Emphasis
5. Adaptive Power Control
6. Multi-dimensional Trellis Coding
7. Shell Mapping (a.k.a. shaping)
8. Warping

How do they actually work? It is a complex negotiation sequence. The following is a brief discussion of the major features which are implemented in V.34 modems.

2.2.1 Mode Negotiation Handshake

A new handshake start up procedure developed specifically for V.34 based products, V.8, includes backward compatibility to all lower speed modems with provisions to recognize and interwork with the V.32bis defined Automode negotiation procedure. This is the first signal exchange that occurs between two V.34 modems when making a connection. As with other elements of the V.34 specification, V.8 is an intelligent procedure allowing V.34 modems to perform feature and mode negotiation quickly, utilizing V.21 (300 bps FSK) modulation to exchange information. Negotiation parameters include such information as:

- Identification of V.34 modems from all other types
- Data mode or Text Phone operation
- Modulation modes available
- V.42 and V.42bis support
- Wireline or Cellular operation

2.2.2 Line Probing

Line probing is the most significant enhancement in the new technology suite in the V.34 standard. It is the basic capability that allows a V.34 modem to intelligently choose the optimum operating parameters for any given telephone connection. It is also the area where manufacturers of modems determine the order of the features to be implemented.

Line probing is a bi-directional half duplex exchange which is performed immediately after V.8 negotiation. It involves the transmission of 21 tones ranging from 150 Hz to 3750 Hz that allows the distant receiver to analyze the characteristics of the telephone channel before entering data transmission. The modems use this line analysis information to choose several key operating parameters, including:

- Carrier Frequency and Symbol Rate: This determines the optimum bandwidth and placement (center frequency) of the transmitted signal within the available channel bandwidth. The modems have 11 possible combinations to choose from with 6 different symbol rates, each with 2 possible carrier frequencies. Three of the symbol rates are mandatory and three are optional.(see bandwidth requirements)

- Pre-Emphasis Selection: The modems choose the optimum transmit pre-emphasis filter from a menu of 10 defined filters in the V.34 specification. (see Adaptive Pre-emphasis)

- Power Control Selection: The modems choose the optimum transmitter output power level with a range of selection of 14 dB in 1 dB increments down from the nominal –9 dB transmitter level. (see Adaptive Power control)

Line probing is performed on every new connection as well as when a full retrain occurs, which can be performed at anytime during a connection. This allows V.34 modems to not only adapt to a broad range of different line types and distortions from call to call, but also accommodate varying line conditions over long periods of time on any given connection. With V.34 modems, as performance decays in the presence of time varying distortions, the modem can re-enter line probing at any time to adjust for, i.e. "adapt to" the prevailing conditions.

2.2.3 Precoding

Precoding is actually a modification on an adaptive equalizer technique developed in the 1970's known as Decisions Feedback Equalizations or DFE. Decision Feedback equalizers have been proven to be the optimum receiver equalization technique for analog voice grade modems and can compensate for Intersymbol Interference (ISI) caused by severely distorted channels. This is essential for high speed modems that need to utilize every ounce of the frequency spectrum available on the line.

The basic idea is to split the DFE between the transmitter and the receiver. In so doing, the V.34 receiver calculates the optimum equalizer coefficients as it would for a normal DFE, but relays them back to the transmitter where the transmitted signal is equalized before transmission. The result is the best of both worlds, Decision Feedback Equalization employing "pre"-equalization and Trellis "Coding" which is "Pre-Coding."

2.2.4 Adaptive Pre-Emphasis

This is another technology taken from the past (formally known as "compromise" equalization or "pre-emphasis") and enhanced with adaptive intelligence. In the past, manufacturers have employed a fixed version of this technology while in V.34 it is adaptive based on actual line characteristics. With pre-emphasis, the transmitted signal is passed through a spectral shaping filter which boosts signals in some parts of the transmitted spectrum while attenuating signals in other parts of the spectrum. Pre-emphasis is very effective against signal-dependent distortion. The idea is to again pre-compensate for known channel distortions learned in Line Probing. If for example, line probing detects that severe roll-off is present at the upper part of the chosen transmit spectrum then an appropriate pre-emphasis filter can be introduced in the transmitter to compensate. Not only is the direct effect of the channel distortion compensated for, but the more severe side effects of non-linear distortion are minimized as well.

The intelligence comes in with the selection of which pre-emphasis filter to utilize. The V.34 specification defines 10 different pre-emphasis filters to choose from. The information attained during line probing is the primary decision criteria in selecting the optimum pre-emphasis filter, the actual method of which is up to the implementor.

2.2.5 Adaptive Power Control

Proper selection of transmitter power is critical in high speed echo canceling modems. Unlike older 4 wire modems or lower speed V.22bis class modems, it is not true that higher transmit power is always better. Echo canceling modems need to strike a balance between high transmission power which can improve signal to noise ratio for the distant receiver, but can introduce undesired echo distortion for the local receiver. On the other hand, too low of a transmitted signal compromises basic signal to noise ratio. Adaptive power control is an intelligent, adaptive scheme which automatically selects the optimum transmit level based on line probing results. A relatively simple concept, but a critical and complex/delicate balance.

2.2.6 Multi-Dimensional Trellis Coding

Trellis coding, simply put is a forward error correction coding scheme. The value of the coding is expressed as a "coding gain" which is a measure of the modems error rate improvement over an uncoded modem. Figure 1 shows the effective coding gain of the three new codes employed in the V.34 specification as compared to the coding technique implemented in V.32bis modems.

The significant points relative to multi-dimensional coding are:

- V.34 employs three new 4-dimensional coding schemes compared to the 2-dimensional scheme employed in V.32bis. 4-dimensional coding has been found to provide the best trade-off between performance, delay and complexity of implementation.

- As can be seen by the performance gain vs. complexity trade off, the V.34 standards body has approached the limits of diminishing returns to achieve the desired performance.

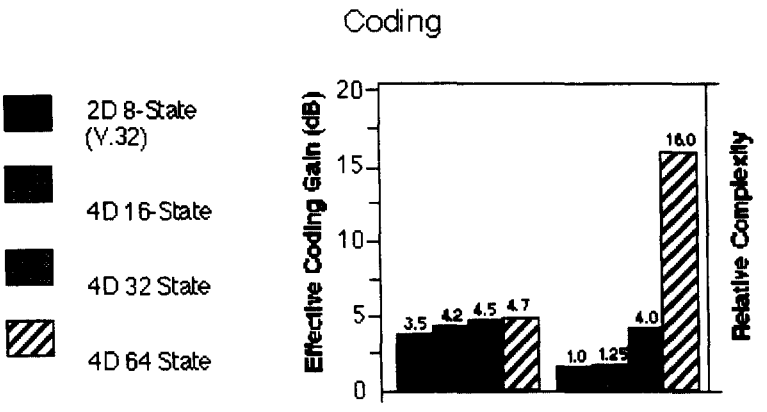

- The 4-D Code Provides a Good Trade-off Between Performance, Delay and Complexity

Figure 1

2.2.7 Shell Mapping (Shaping)

In high speed modems each symbol transmitted contains a multiplicity of user data bits and coding bits. These bits are grouped into symbols and then mapped into a 2 dimensional signal constellation (as shown in Figure 2). The resulting signal point is then transformed to its analog signal equivalent for transmission over the analog voice channel. Shell mapping is a signal constellation mapping technique which attempts to distribute these signal points in the 2 dimensional space in such a way as to improve the resultant noise immunity by approximately 1 dB.

The concept is basically that an optimum constellation would be a spherical shape, however, this is not possible. Shell mapping approximates the spherical shape by mapping a square grid constellation to a near-spherical shape with guassian distribution of the signal points in the 2 dimensional space. The net effect is that the constellation is expanded, and the signal to noise ratio is improved by approximately 1 dB. The V.34 specification supports 2 levels of shell mapping which are related in terms of the resulting constellation expansion; 12.5% and 25% expansion.

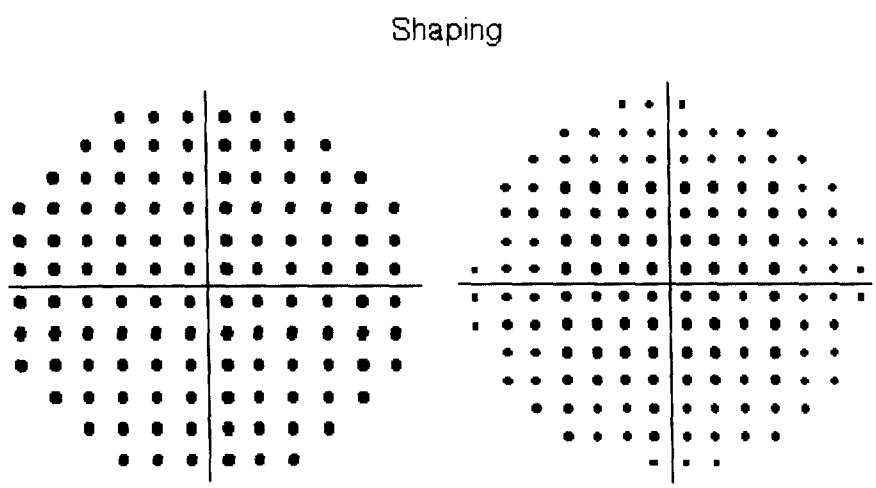

Figure 2

2.2.8 Warping (a.k.a. Non-linear Encoding)

Warping is another form of signal space coding specifically designed to combat the effects of signal dependent channel distortion also known as non-linear distortion or harmonic distortion. Non-linear distortion is present in all types of telephone channels and is by-in-large due to the PCM digital encoding of the analog signals. The non-linear nature of PCM coding compounded by the non-linear distortion introduced by analog components such as transformers and loading coils wreak havoc on these high speed modems.

Warping is a means of trading off signal to noise immunity for improvement in signal dependent distortion immunity. Figure 3 shows how warping does this.

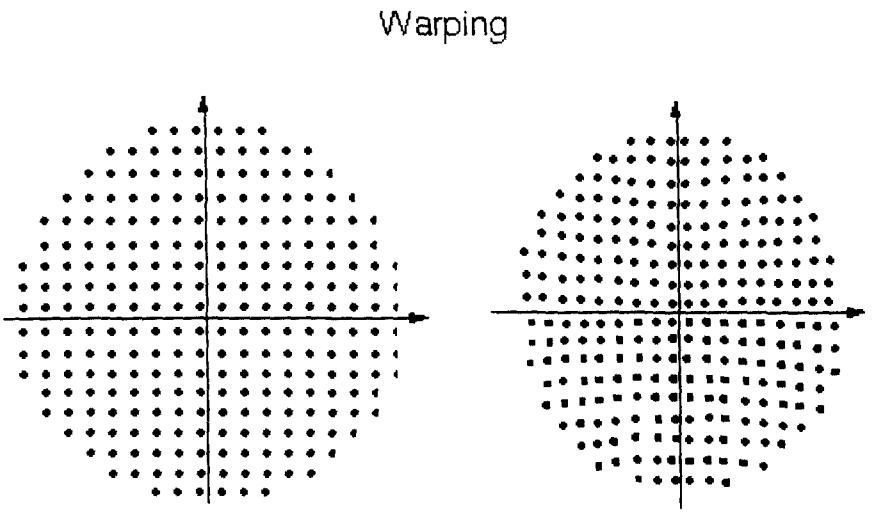

Figure 3

Knowing that non-linear distortion effects the outer constellation points more severely than the inner constellation points, the concept is to compromise the noise immunity of the inner points in favor of the more susceptible out points. The result is that the mean distance between points is increased in the outer fringe of the constellation (improving the immunity to all types of distortion, but particularly non-linear distortion) while the mean distance between the inner points is reduced.

2.2.9 Implementation

The V.34 standard does not mandate the full implementation of all features within the document. There are minimum requirements so that modems will function at the V.34 level but it leaves the details to the manufacturers. Each manufacturer decides which options will be used and in what order they will be processed. With this overview, it is understood that there are tradeoffs and compromises being made to optimize the V.34 modems performance with the connection over the network. The data rates will therefore be set to the highest possible level but to the lowest denominator of the modems for compatibility.

3. Transmission Parameters for V.34 Modems

With some understanding of what the V.34 modems are doing in response to the telephone network, a look at the transmission requirements is needed. The V.34 recommendation requirements are based on modem implementation and need to be redefined in telephony terms. The important parameters are bandwidth (frequency requirements), receive level, and noise requirement. As the V.34 overview tried to illustrate, the modems are designed to take the network variations into account and optimize the modem's performance.

3.1 Bandwidth Requirements for Data Rate Selection

The ITU Recommendation in this section is called Carrier Frequencies. It takes several tables and calculations to put it into terms that make sense in the telephone world. The table below shows the relationship between symbol rate, bandwidth and data rate. Symbol rate is the term now used to express baud rate. Each symbol encodes as many as nine (9) bits of data which yields the data rate. Each symbol rate except 3429 has two center frequencies to chose from and they are called high and low. There is approximately a 200 Hz difference in the bandwidth used. This is to compensate for frequency roll-off at either the high or low ends of the spectrum.

Symbol Rate per sec		Center Frequency	Bandwidth Requirements	Maximum data Rate Kbps
2400	Low	1600 Hz	400 - 2800 Hz	21.6
	High	1800 Hz	600 - 3000 Hz	21.6
2743 ◆	Low	1646 Hz	274 - 3018 Hz	24.0
	High	1829 Hz	457 - 3200 Hz	24.0
2800 ◆	Low	1680 Hz	280 - 3080 Hz	24.0
	High	1867 Hz	467 - 3267 Hz	24.0
3000	Low	1800 Hz	300 - 3300 Hz	26.4
	High	2000 Hz	500 - 3500 Hz	26.4
3200	Low	1829 Hz	229 - 3429 Hz	28.8
	High	1920 Hz	320 - 3520 Hz	28.8
3429 ◆		1959 Hz	244 - 3674 Hz	28.8

◆ Optional Symbol Rate

Telephone tariff requirements are usually written around 300 to 3000 Hz. As the table illustrates, V.34 modems go well beyond these numbers. In reality, the network has more bandwidth than the tariffs state, but there are no guarantees. Different transport systems will limit the bandwidth. While this does not effect voice connections, it will change the performance of a V.34 modem. It should be understood that these modems are probing the very limits of the telephone spectrum and trying to adapt to the conditions that are there.

3.2 Receive Level (Carrier Detect)

The ITU recommendation on threshold levels for carrier detection is a level greater than -43 dBm. This is the modem's term for receive level. It has been observed that most V.34 modems need a

level of -40 dBm at the high end of the bandwidth to set the symbol rate and bit rate. For example, if a modem registers a level of -42 dBm at 3400 Hz, then it would select a symbol rate of 3200 and use the lower center frequency of 1829 Hz. The data rate would be set at 26.4 Kbps if all other parameters were adequate.

3.3 Noise Requirement

The ITU V.34 recommendation does not directly address the noise requirements. It was necessary to check with modem manufacturers. As the overview indicated, the constellation of the V.34 modem is very compact. Signal-to-Noise Ratio (SNR) was the parameter that was needed to be met. The lower limit that has been quoted is 32 to 34 dB. This is the lowest SNR needed to be able to connect at 28.8 Kbps on V.34 modems. Most tariff requirements are written to guarantee only a 24 dB SNR. The network has improved and this number is achieved in the switched network, but older types of network elements are still deployed and, as such, a SNR of 32 or greater cannot be guaranteed.

Bellcore's TM-25202[2] reported signal-to-noise ratios for digital connections. When an analog-to-digital (A/D), then a digital-to-analog (D/A) conversion occurs, there is a SNR of 36 to 38 dB measured through the transport. A universal digital loop carrier (UDLC) is a typical example found in the network. Two of these transports would result in a SNR of 33 to 35 dB. When a local switch and cable is added into the equation, the SNR would fall to 32 or less. This would drop the data rate one level.

4. Local Observations

There have been reports from local companies having to do with short local loops. It was determined that loops with less than 3 dB of loss were running lower than expected data rates. Through trial and error, performance was sometimes improved by adding additional loss to the loop. The underlying factor was poor return loss and some modems could not cancel out the near end echo that was produced. The modems would interpret the echo as noise and adjust the data rate down to compensate. This is a fundamental issue that has been taken up by the EIA/TIA standards body on analog modems. A new network model has been proposed to more accurately reflect the actual switched telephone network.

These same short loops can generate higher current through some modem transformers and cause poor performance. Customers have had to add balanced resistors to the line to reduce the current flow through their modems. Another issue is with modems that have electronic termination which regulates the current. If these modems are connected to a digital loop carrier (DLC) channel unit that adjusts transmission levels based on loop resistance, the modems will receive a hot level and have return loss problems.

The customer's home environment can effect V.34 modem performance. Customer premises wire can pick up noise when twisted cable pairs is not used. Also, a direct run from the protector may give some improvement. The other source of noise can come from other telephone sets on the same line as well as Fax machines and answering machines. Removing these devices from the data line could help in improving data connections.

5. Modem Testing

5.1 System Configuration

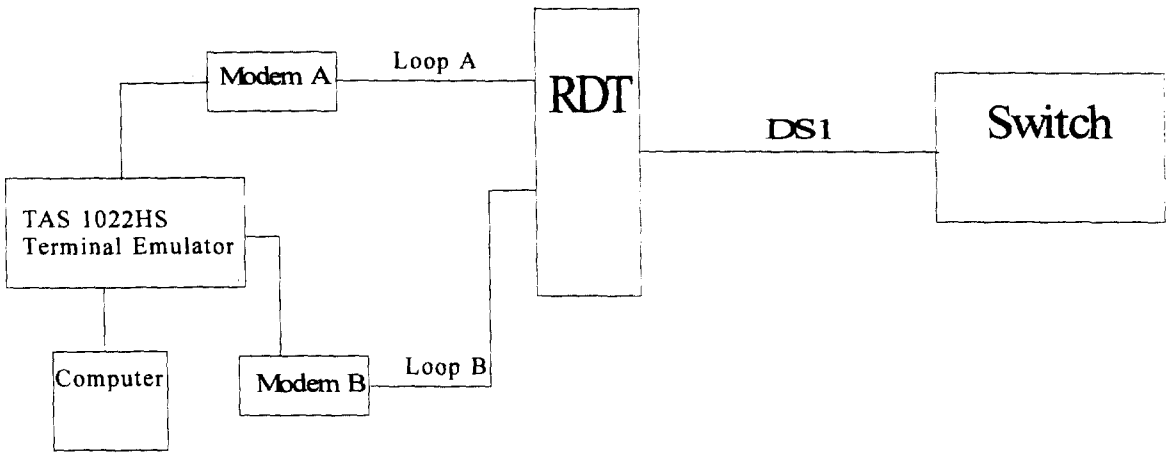

Figure 4 Modem Test Configuration

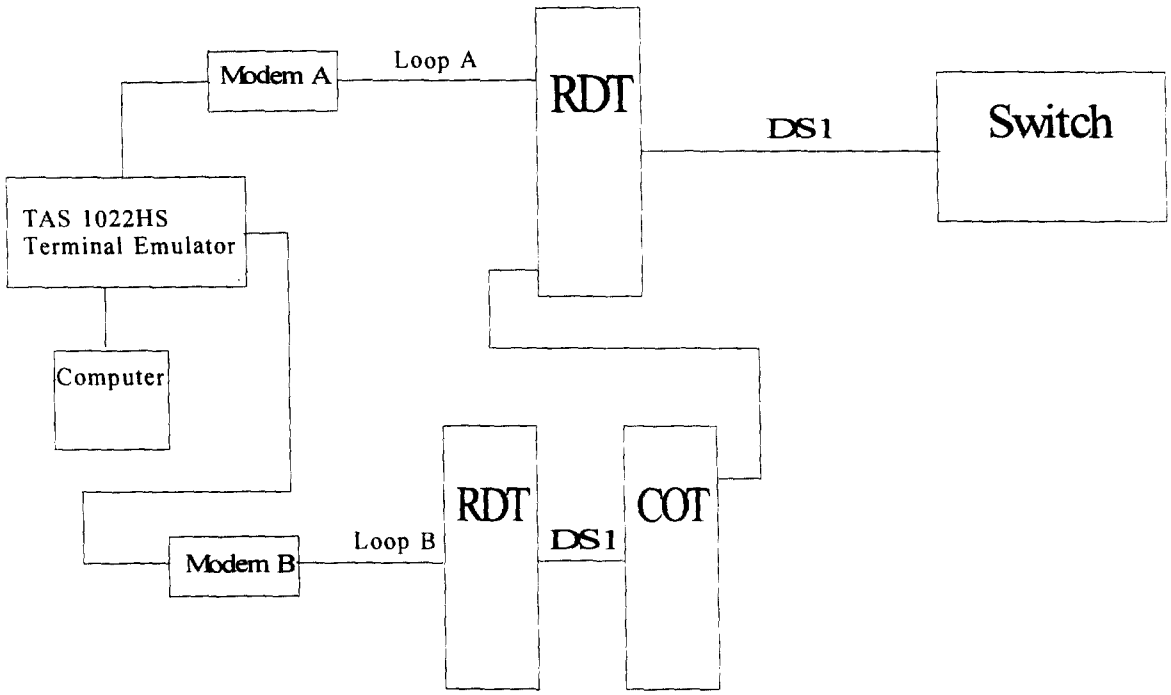

Figure 5 Modem Test Configuration with Additional Conversion

The test setups detailed in Figures 4 and 5 involved a SLC 96 COT and RT with appropriate POTS and UVG LUs. The access system in Figure 4 was installed as integrated DLC with the switch located at the Bellcore facility in Red Bank, NJ. The DLC systems were located at the Bellcore

facility in Morristown. Bellcore corporate network MUXs were used for the DS1 connections between Morristown and Red Bank. In all cases, each system was externally timed from a Stratum 1 level cesium clock source.

5.2 Test Procedures

The goal of these tests was to determine the maximum data rates under different conditions. A file was transferred between modems to insure a valid connection.

A Telcom Analysis Systems TAS 1022HS terminal emulator was used to control the modems. Procomm PLUS for Windows was used to communicate with the TAS 1022HS. A script file , written in Procomm's Windows Aspect Script (WAS) language was used to automate the TAS 1022HS dialing, file transfer and to capture test results.

5.3 Results

5.3.1 Tests with PCM Conversions

The table below shows results of tests where the number of analog to digital conversions and the loop lengths are varied.

Number of conversions	A side Loop	B side Loop	dB Loss at 1004 Hz	dB Loss at 3604 Hz	A Data Rate	B Data Rate
1	na	na	4.6	13.8	28.8	28.8
1	3 Kft	3 Kft	7.7	18.4	28.8	28.8
2	3 Kft	1.5 Kft	10.0	30.2	21.6	24.0
2	6 Kft	1.5 Kft	10.5	33.4	21.6	24.0
2	9 Kft	1.5 Kft	12.0	36.2	21.6	24.0
2	12 Kft	1.5 Kft	13.5	39.2	19.2	24.0

As seen in the table, one digital conversion resulted in a maximum connect rate of 28.8 Kbps. However, there was either no loop attached or a very short loop was present. The result was little frequency roll off at the high end. When an additional conversion is present, the data rate drops in both directions. There is no additional effect with loop length until after the 9 Kft section is reached. The level at 3604 Hz starts to gets closer to the -40 dBm point at 9 Kft and at 12 Kft, it is close enough to it that the data rate goes down another level.

5.3.2 Local Cable Tests

Below is a table which shows the connect rates when using the fifteen loops found in TR-NWT-000393[3]. These loops were used to determine the effects of different cable lengths and bridged-taps (BT) on modem connect rates. They are actual cables located in the Bellcore Morristown Lab. The B side of the test configuration was set at 1.5 Kft of 26 gauge cable to represent an Internet Service Provider on a short loop, either to a local switch or a Digital Loop Carrier (DLC). The A side represented typical residential users. Only one digital conversion is present in this set of tests.

Loop Cxr	No DLC (0)	IDLC (2)	UDLC (6) **Loop Cxr Value =**
Switch Type		Analog (0)	Digital (1) **Switch Value =**
Interoffice Facility	Digital Route (2)	Analog tandem (4)	B/B T-Cxr (6) **Facility Value =**
Switch Type		Analog (0)	Digital (1) **Switch Value =**
Loop Cxr	No DLC (0)	IDLC (2)	UDLC (6) **Loop Cxr Value =**
Customer loop	0-9 Kft NL (0) 18 - 24 Kft L (7)	9 - 12 NL Kft (1) 24-30 Kft L (10)	12- 18 Kft NL (3) > 30 Kft L (12) **Loop Value =**
Add the six values to obtain the Sum of Values			***Sum of all Values=***

Take the Sum of Values and find the range that identifies the most optimistic possible data rate for this connection.

0-6 = 28.8 Kbps 7-9 = 26.4 Kbps 10-13 = 24.0 Kbps 14-16 = 21.6 Kbps

17-20 = 19.2 Kbps 21-25 = 14.4 Kbps 26-30 = 9.6 Kbps

7. Conclusions

The results of this report clearly indicate that V.34 modem performance will vary greatly over the switched telephone network. This is due, in part, to the varied facilities that exist in the network, but on how modem manufacturers have implemented the V.34 recommendation.

The telephone network is made up of PCM links with A/D and D/A conversions. Each link will degrade a V.34 modem connection by one level due to the addition of quantization noise introduced by the μ-law encoding and decoding. When local cable is added to the equation, a length of more than 9 Kft or greater will degrade a modem connect rate due to the frequency roll-off at the high end of the spectrum. Therefore, if a telephone company had only digital switches, and all digital trunking between them and had only local cable that never extended 9 Kft, all their customers would be happily running their data lines at 28.8 Kbps. However, this environment does not exist at this time. Many modem users will have data connections at less than 28.8 Kbps but because of how V.34 modems operate, they will run at the most optimum rate possible.

8. References

1. ITU-T Recommendation V.34, *A Modem Operating at Data Signaling Rates of up to 28,800 bit/s for use on the General Switched Telephone Network an don Leased Point-to-Point 2-wire Telephone-type Circuits*, September 1994

2. TM-25202, *Engineering Guidelines For Facility Design to Meet Enhanced Data Conditioning Transmission Requirements*, September 29, 1995, Published by Bellcore

3. TR-NWT-000393, *Generic Requirements for ISDN Basic Access Digital Subscriber Lines*, Issue 2, January 1991, Published by Bellcore

Cardinal®

Analysis of 18 Kft and 12 Kft Runs

Following are uncapped results of running BCPM3 assuming 18 Kft and 12Kft maximum copper loop lengths for the five states specified by the FCC. It should be noted that the 18 Kft results incorporate 24 gauge copper cable and extended range DLC line cards, as appropriate, to meet the transmission specifications of the equipment manufacturer.

The preprocessing of grids differs in the 18K runs from the 12K runs to ensure that copper loops lengths from the DLC to the customer do not exceed 18,000 feet. The maximum size grid permitted, i.e. macrogrid, in the 18K runs is 1/20th of a degree. This corresponds to approximately 18,000 feet by 14,000 feet, longitude and latitude. (Recall that in the 12K runs, the macrogrid corresponded to approximately 12,000 feet by 14,000 feet.)

In addition, the macrogrid in the 18K runs cannot be combined with partial grids located along the wire center boundaries as permitted in the 12K runs. Again, this is to ensure that copper loop lengths from the DLC to the customer do not exceed 18,000 feet.

Finally, in the 18K runs, the DLC site is no longer established at the road centroid of the ultimate grid as it is in the 12K runs. The DLC is placed at the geographic centroid of the ultimate grid in the 18K runs to ensure that copper loop lengths from the DLC to the customer do not exceed 18,000 feet.

Also included, are maps showing the actual grid locations for the five states under the 12 Kft and 18 Kft scenarios.

Summary of BCPM3 results for 5 requested FCC states

State	Grid Size	Investment	Loop	Switch & Signaling	Transport	Monthly Cost	Subsidy at 31 &51
Florida	18kft	1,263	935	236	10	30.98	301,318,119
	12kft	1,248	922	236	8	30.78	288,628,254
Georgia	18kft	1,753	1,361	273	9	38.77	434,649,627
	12kft	1,730	1,348	266	8	38.42	424,699,602
Maryland	18kft	1,114	779	251	7	28.71	83,023,533
	12kft	1,099	767	250	6	28.49	78,047,875
Missouri	18kft	2,244	1,709	378	12	46.26	562,884,883
	12kft	2,238	1,709	377	9	46.17	566,469,703
Montana	18kft	6,707	5,790	463	78	114.21	325,921,019
	12kft	6,573	5,684	463	58	111.82	305,553,703

Florida Grids at 12Kft

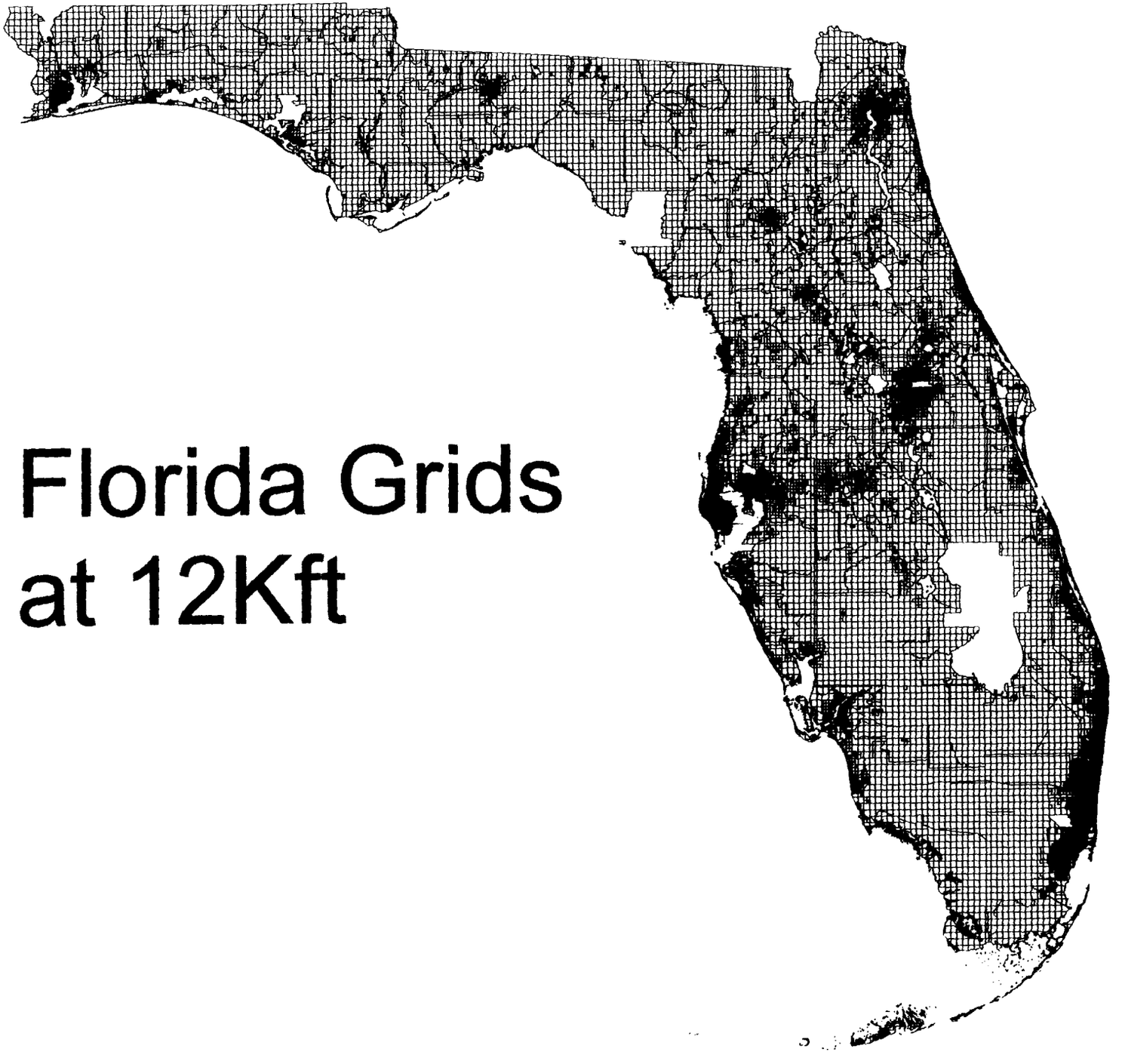
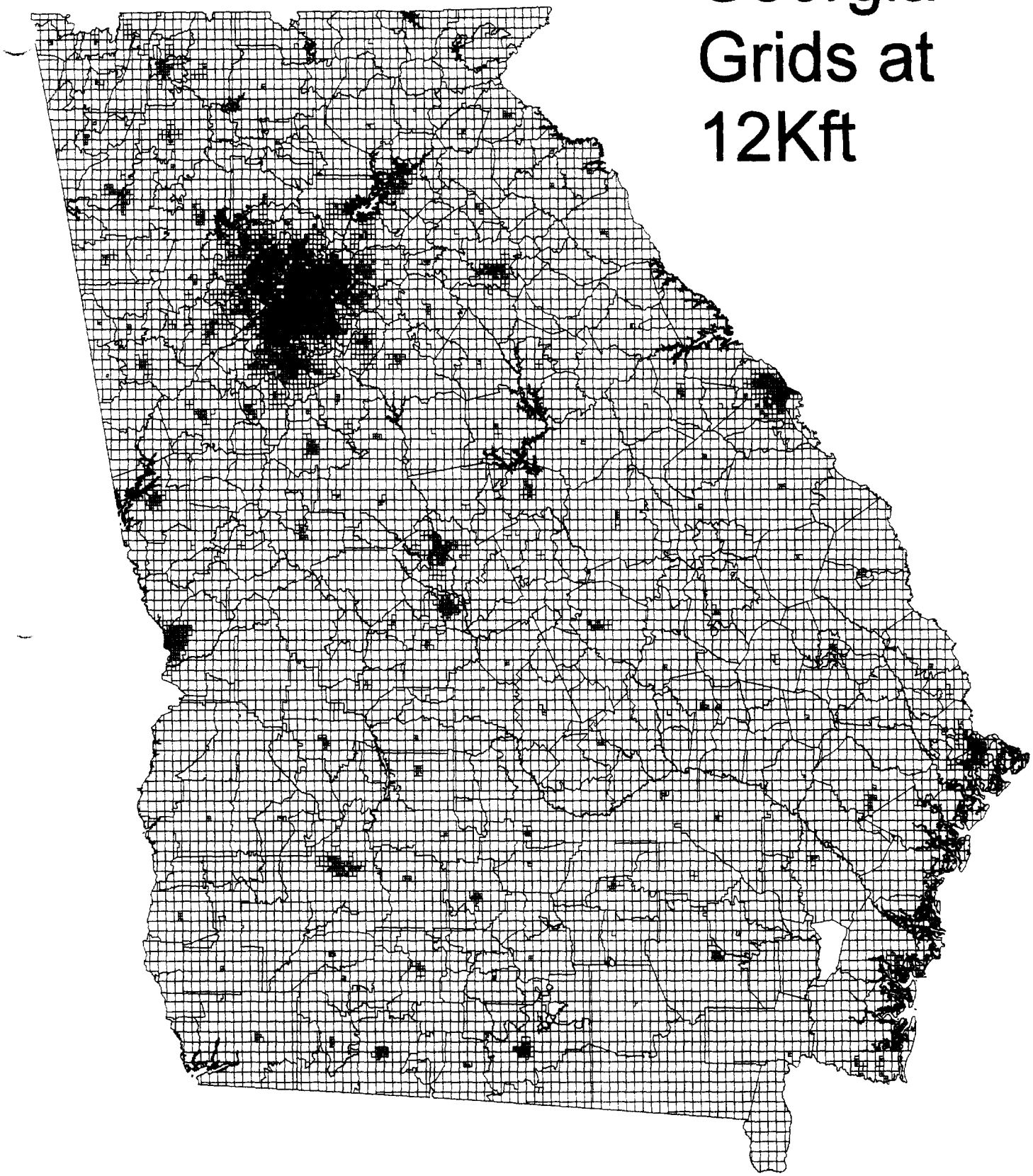
Georgia Grids at 12Kft