Fraction CBG Affected	Effect	Texture	Description of Texture
1.00	1.20	CBV-CL	Very Cobbly & Clay Loam
1.00	1.20	CBV-FSL	Very Cobbly & Fine Sandy Loam
1.00	1.20	CBV-L	Very Cobbly & Loamy
1.00	1.20	CBV-LFS	Very Cobbly & Fine Loamy Sand
1.00	1.20	CBV-LS	Very Cobbly & Loamy Sand
1.00	1.20	CBV-MUCK	Very Cobbly & Muck
1.00	1.20	CBV-SCL	Very Cobbly & Sandy Clay Loam
1.00	1.20	CBV-SIL	Very Cobbly & Silt
1.00	1.20	CBV-SL	Very Cobbly & Sandy Loam
1.00	1.20	CBV-VFS	Very Cobbly & Very Fine Sand
1.00	1.20	CBX	Extremely Cobbly
1.00	1.20	CBX-CL	Extremely Cobbly & Clay
1.00	1.20	CBX-L	Extremely Cobbly Loam
1.00	1.20	CBX-SIL	Extremely Cobbly & Silt
1.00	1.20	CBX-SL	Extremely Cobbly &Sandy Loam
1.00	1.30	CBX-VFSL	Extremely Cobbly Very Fine Sandy Loam
1.00	1.00	CE	Coprogenous Earth
1.00	1.00	CIND	Cinders
1.00	1.00	CL	Clay Loam
1.00	1.30	CM	Cemented
1.00	1.00	CN	Channery
1.00	1.00	CN-CL	Channery & Clay Loam
1.00	1.10	CN-FSL	Channery & Fine Sandy Loam
1.00	1.00	CN-L	Channery & Loam
1.00	1.00	CN-SICL	Channery & Silty Clay Loam
1.00	1.00	CN-SIL	Channery & Silty Loam
1.00	1.00	CN-SL	Channery & Sandy Loam
1.00	1.00	CNV	Very Channery
1.00	1.00	CNV-CL	Very Channery & Clay
1.00	1.00	CNV-L	Very Channery & Loam
1.00	1.00	CNV-SCL	Channery & Sandy Clay Loam
1.00	1.00	CNV-SIL	Very Channery & Silty Loam
1.00	1.00	CNV-SL	Very Channery & Sandy Loam
1.00	1.00	CNX	Extremely Channery
1.00	1.00	CNX-SL	Extremely Channery & Sandy Loam
1.00	1.00	COS	Coarse Sand
1.00	1.00	COSL	Coarse Sandy Loam
1.00	1.20	CR	Cherty
1.00	1.20	CR-L	Cherty & Loam
1.00	1.20	CR-SICL	Cherty & Silty Clay Loam
1.00	1.20	CR-SIL	Cherty & Silty Loam
1.00	1.20	CR-SL	Cherty & Sandy Loam
1.00	1.20	CRC	Coarse Cherty
1.00	1.20	CRV	Very Cherty
1.00	1.20	CRV-L	Very Cherty & Loam
1.00	1.20	CRV-SIL	Very Cherty & Silty Loam

Fraction CBG Affected	Effect	Texture	Description of Texture
1.00	1.30	CRX	Extremely Cherty
1.00	1.30	CRX-SIL	Extremely Cherty & Silty Loam
1.00	1.00	DE	Diatomaceous Earth
1.00	1.00	FB	Fibric Material
1.00	1.00	FINE	Fine
1.00	1.00	FL	Flaggy
1.00	1.10	FL-FSL	Flaggy & Fine Sandy Loam
1.00	1.00	FL-L	Flaggy & Loam
1.00	1.00	FL-SIC	Flaggy & Silty Clay
1.00	1.00	FL-SICL	Flaggy & Silty Clay Loam
1.00	1.00	FL-SIL	Flaggy & Silty Loam
1.00	1.00	FL-SL	Flaggy & Sandy Loam
1.00	1.10	FLV	Very Flaggy
1.00	1.10	FLV-COSL	Very Flaggy & Coarse Sandy Loam
1.00	1.10	FLV-L	Very Flaggy & Loam
1.00	1.10	FLV-SICL	Very Flaggy & Silty Clay Loam
1.00	1.10	FLV-SL	Very Flaggy & Sandy Loam
1.00	1.10	FLX	Extremely Flaggy
1.00	1.10	FLX-L	Extremely Flaggy & Loamy
1.00	1.00	FRAG	Fragmental Material
1.00	1.10	FS	Fine Sand
1.00	1.10	FSL	Fine Sandy Loam
1.00	1.00	G	Gravel
1.00	1.00	GR	Gravelly
1.00	1.00	GR-C	Gravel & Clay
1.00	1.00	GR-CL	Gravel & Clay Loam
1.00	1.00	GR-COS	Gravel & Coarse Sand
1.00	1.00	GR-COSL	Gravel & Coarse Sandy Loam
1.00	1.00	GR-FS	Gravel & Fine Sand
1.00	1.00	GR-FSL	Gravel & Fine Sandy Loam
1.00	1.00	GR-L	Gravel & Loam
1.00	1.00	GR-LCOS	Gravel & Loamy Coarse Sand
1.00	1.10	GR-LFS	Gravel & Loamy Fine Sand
1.00	1.00	GR-LS	Gravel & Loamy Sand
1.00	1.00	GR-MUCK	Gravel & Muck
1.00	1.00	GR-S	Gravel & Sand
1.00	1.00	GR-SCL	Gravel & Sandy Clay Loam
1.00	1.00	GR-SIC	Gravel & Silty Clay
1.00	1.00	GR-SICL	Gravel & Silty Clay Loam
1.00	1.00	GR-SIL	Gravel & Silty Loam
1.00	1.00	GR-SL	Gravel & Sandy Loam
1.00	1.10	GR-VFSL	Gravel & Very Fine Sandy Loam
1.00	1.00	GRC	Coarse Gravelly
1.00	1.00	GRF	Fine Gravel
1.00	1.00	GRF-SIL	Fine Gravel Silty Loam
1.00	1.00	GRV	Very Gravelly

Fraction CBG Affected	Effect	Texture	Description of Texture
1.00	1.00	GRV-CL	Very gravelly & Clay Loam
1.00	1.00	GRV-COS	Very Gravelly & coarse Sand
1.00	1.00	GRV-COSL	Very Gravelly & coarse Sandy Loam
1.00	1.00	GRV-FSL	Very Gravelly & Fine Sandy Loam
1.00	1.00	GRV-L	Very Gravelly & Loam
1.00	1.00	GRV-LCOS	Very Gravelly & Loamy Coarse Sand
1.00	1.00	GRV-LS	Very Gravelly & Loamy Sand
1.00	1.00	GRV-S	Very Gravelly & Sand
1.00	1.00	GRV-SCL	Very Gravelly & Sandy Clay Loam
1.00	1.00	GRV-SICL	Very Gravelly & Silty Clay Loam
1.00	1.00	GRV-SIL	Very Gravelly & Silt
1.00	1.00	GRV-SL	Very Gravelly & Sandy Loam
1.00	1.00	GRV-VFS	Very Gravelly & Very Fine Sand
1.00	1.00	GRV-VFSL	Very Gravelly & Very Fine Sandy Loam
1.00	1.10	GRX	Extremely Gravelly
1.00	1.10	GRX-CL	Extremely Gravelly & Coarse Loam
1.00	1.10	GRX-COS	Extremely Gravelly & Coarse Sand
1.00	1.10	GRX-COSL	Extremely Gravelly & Coarse Sandy Loam
1.00	1.10	GRX-FSL	Extremely Gravelly & Fine Sand Loam
1.00	1.10	GRX-L	Extremely Gravelly & Loam
1.00	1.10	GRX-LCOS	Extremely Gravelly & Loamy Coarse
1.00	1.10	GRX-LS	Extremely Gravelly & Loamy Sand
1.00	1.10	GRX-S	Extremely Gravelly & Sand
1.00	1.10	GRX-SIL	Extremely Gravelly & Silty Loam
1.00	1.10	GRX-SL	Extremely Gravelly & Sandy Loam
1.00	1.20	GYP	Gypsiferous Material
1.00	1.00	HM	Hemic Material
1.00	1.50	ICE	Ice or Frozen Soil
1.00	1.20	IND	Indurated
1.00	1.00	L	Loam
1.00	1.00	LCOS	Loamy Coarse Sand
1.00	1.10	LFS	Loamy Fine Sand
1.00	1.00	LS	Loamy Sand
1.00	1.00	LVFS	Loamy Very Fine Sand
1.00	1.00	MARL	Marl
1.00	1.00	MEDIUM coarse	Medium Coarse
1.00	1.00	MK	Mucky
1.00	1.00	MK-C	Mucky Clay
1.00	1.00	MK-CL	Mucky Clay Loam
1.00	1.00	MK-FS	Muck & Fine Sand
1.00	1.00	MK-FSL	Muck & Fine Sandy Loam
1.00	1.00	MK-L	Mucky Loam
1.00	1.00	MK-LFS	Mucky Loamy Fine Sand
1.00	1.00	MK-LS	Mucky Loamy Sand
1.00	1.00	MK-S	Muck & Sand
1.00	1.00	MK-SI	Mucky & Silty

Fraction CBG Affected	Effect	Texture	Description of Texture
1.00	1.00	MK-SICL	Mucky & Silty Clay Loam
1.00	1.00	MK-SIL	Mucky Silt
1.00	1.00	MK-SL	Mucky & Sandy Loam
1.00	1.00	MK-VFSL	Mucky & Very Fine Sandy Loam
1.00	1.00	MPT	Mucky Peat
1.00	1.00	MUCK	Muck
1.00	1.00	PEAT	Peat
1.00	1.00	PT	Peaty
1.00	1.50	RB	Rubbly
1.00	1.50	RB-FSL	Rubbly Fine Sandy Loam
1.00	1.00	S	Sand
1.00	1.00	SC	Sandy Clay
1.00	1.00	SCL	Sandy Clay Loam
1.00	1.00	SG	Sand & Gravel
1.00	1.00	SH	Shaly
1.00	1.00	SH-CL	Shaly & Clay
1.00	1.00	SH-L	Shale & Loam
1.00	1.00	SH-SICL	Shaly & Silty Clay Loam
1.00	1.00	SH-SIL	Shaly & Silt Loam
1.00	1.50	SHV	Very Shaly
1.00	1.50	SHV-CL	Very Shaly & Clay Loam
1.00	2.00	SHX	Extremely Shaly
1.00	1.00	SI	Silt
1.00	1.00	SIC	Silty Clay
1.00	1.00	SICL	Silty Clay Loam
1.00	1.00	SIL	Silt Loam
1.00	1.00	SL	Sandy Loam
1.00	1.00	SP	Sapric Material
1.00	1.00	SR	Stratified
1.00	1.00	ST	Stony
1.00	1.00	ST-C	Stony & Clay
1.00	1.00	ST-CL	Stony & Clay Loam
1.00	1.00	ST-COSL	Stony & Coarse Sandy Loam
1.00	1.10	ST-FSL	Stony & Fine Sandy Loam
1.00	1.00	ST-L	Stony & Loamy
1.00	1.00	ST-LCOS	Stony & Loamy Coarse Sand
1.00	1.10	ST-LFS	Stony & Loamy Fine Sand
1.00	1.00	ST-LS	Stony & Loamy Sand
1.00	1.00	ST-SIC	Stony & Silty Clay
1.00	1.00	ST-SICL	Stony & Silty Clay Loam
1.00	1.00	ST-SIL	Stony & Silt Loam
1.00	1.00	ST-SL	Stony & Sandy Loam
1.00	1.10	ST-VFSL	Stony & Sandy Very Fine Silty Loam
1.00	1.20	STV	Very Stony
1.00	1.20	STV-C	Very Stony & Clay
1.00	1.20	STV-CL	Very Stony & Clay Loam

Fraction CBG Affected	Effect	Texture	Description of Texture
1.00	1.20	STV-FSL	Very Stony & Fine Sandy Loam
1.00	1.20	STV-L	Very Stony & Loamy
1.00	1.20	STV-LFS	Very Stony & Loamy Fine Sand
1.00	1.20	STV-LS	Very Stony & Loamy Sand
1.00	1.20	STV-MPT	Very Stony & Mucky Peat
1.00	1.20	STV-MUCK	Very Stony & Muck
1.00	1.20	STV-SICL	Very Stony & Silty Clay Loam
1.00	1.20	STV-SIL	Very Stony & Silty Loam
1.00	1.20	STV-SL	Very Stony & Sandy Loam
1.00	1.20	STV-VFSL	Very Stony & Very Fine Sandy Loam
1.00	1.30	STX	Extremely Stony
1.00	1.30	STX-C	Extremely Stony & Clay
1.00	1.30	STX-CL	Extremely Stony & Clay Loam
1.00	1.30	STX-COS	Extremely Stony & Coarse Sand
1.00	1.30	STX-COSL	Extremely Stony & Coarse Sand Loam
1.00	1.30	STX-FSL	Extremely Stony & Fine Sandy Loam
1.00	1.30	STX-L	Extremely Stony & Loamy
1.00	1.30	STX-LCOS	Extremely Stony & Loamy Coarse Sand
1.00	1.30	STX-LS	Extremely Stony & Loamy Sand
1.00	1.30	STX-MUCK	Extremely Stony & Muck
1.00	1.30	STX-SIC	Extremely Stony & Silty Clay
1.00	1.30	STX-SICL	Extremely Stony & Silty Clay Loam
1.00	1.30	STX-SIL	Extremely Stony & Silty Loam
1.00	1.30	STX-SL	Extremely Stony & Sandy Loam
1.00	1.30	STX-VFSL	Extremely Stony & Very Fine Sandy Loam
1.00	3.00	SY	Slaty
1.00	3.00	SY-L	Slaty & Loam
1.00	3.00	SY-SIL	Slaty & Silty Loam
1.00	3.50	SYV	Very Slaty
1.00	4.00	SYX	Extremely Slaty
1.00	1.00	UNK	Unknown
1.00	2.00	UWB	Unweathered Bedrock
1.00	1.00	VAR	Variable
1.00	1.00	VFS	Very Fine Sand
1.00	1.00	VFSL	Very Fine Sandy loam
1.00	3.00	WB	Weathered Bedrock

Support: Discussions with excavation contractors who routinely perform work in a variety of soil conditions are reflected in the default difficulty factors listed above. Difficulty factors range from 1.00, or no additional effect, to as high as 4.0, or 400% as much as normal.

Although an engineer would normally modify plans to avoid difficult soil textures where possible, and although it is likely that population is located in portions of a CBG where conditions are less severe than is the average throughout the CBG, HM 5.0 has taken the conservative approach of assuming that the difficult terrain factors would affect 100% of the CBG.

APPENDIX A

Interoffice Transmission Terminal Configuration (OC-48 Fiber Ring)

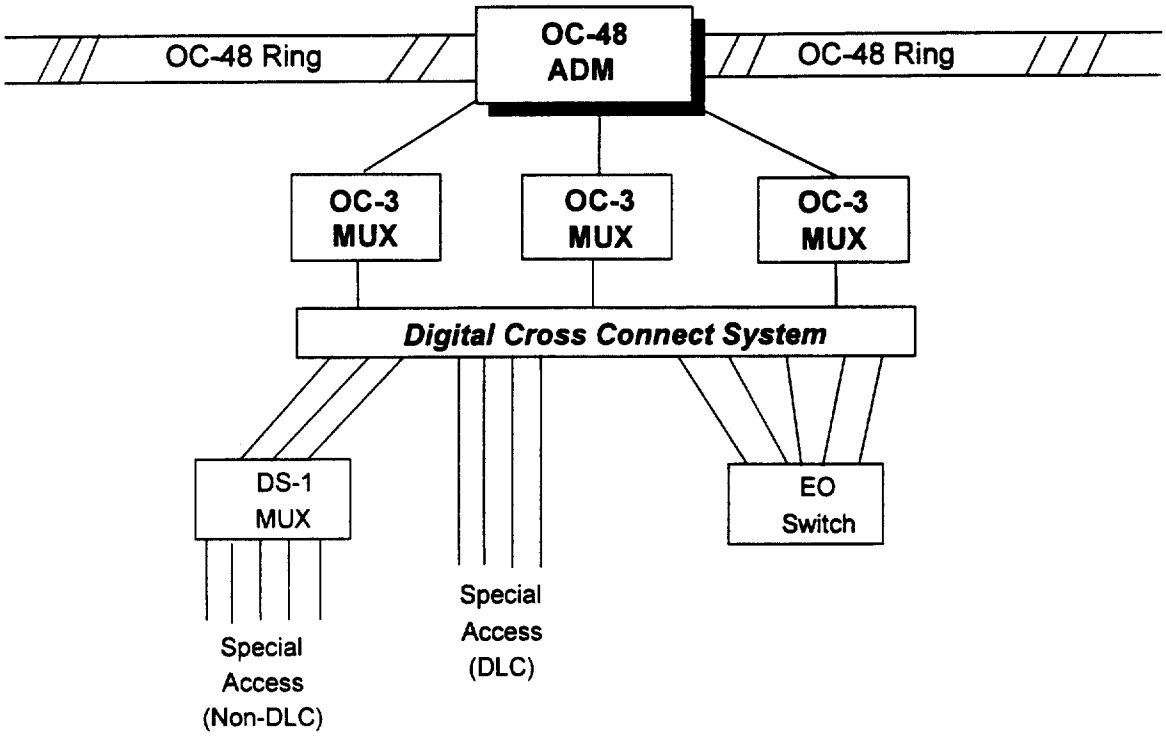

APPENDIX B

Structure Shares Assigned to Incumbent Local Telephone Companies

B.1. Overview

Due to their legacy as rate-of-return regulated monopolies, LECs and other utilities have heretofore had little incentive to share their outside plant structure with other users. To share would have simply reduced the "ratebase" upon which their regulated returns were computed. But today and going forward, LECs and other utilities face far stronger economic and institutional incentives to share outside plant structure whenever it is technically feasible. There are two main reasons. First, because utilities are now more likely to either face competition or to be regulated on the basis of their prices (e.g., price caps) rather than their costs (e.g., ratebase), a LEC's own economic incentive is to share use of its investment in outside plant structure. Such arrangements permit the LEC to save substantially on its outside plant costs by spreading these costs across other utilities or users. Second, many localities now strongly encourage joint pole usage or trenching operations for conduit and buried facilities as a means of minimizing the unsightliness and/or right-of-way congestion occasioned by multiple poles, or disruptions associated with multiple trenching activities.

Because of these economic and legal incentives, not only has structure sharing recently become more common, but its incidence is likely to accelerate in the future – especially given the Federal Telecommunications Act's requirements for nondiscriminatory access to structure at economic prices.

The degree to which a LEC can benefit from structure sharing arrangements varies with the type of facility under consideration. Sharing opportunities are most limited for multiple use of the actual conduits (e.g., PVC pipe) through which cables are pulled that comprise a portion of underground structure. Because of safety concerns, excess ILEC capacity within a conduit that carries telephone cables can generally be shared only with other low-voltage users, such as cable companies, other telecommunications companies, or with municipalities or private network operators. Although the introduction of fiber optic technology has resulted in slimmer cables that have freed up extra space within existing conduits, and thus enlarged actual sharing opportunities, the Hatfield Model does not assume that conduit is shared because as a forward-looking model of efficient supply, it assumes that a LEC will not overbuild its conduit so as to carry excess capacity available for sharing.

Trenching costs of conduit, however, account for most of the costs associated with underground facilities – and LECs can readily share these costs with other telecommunications companies, cable companies, electric, gas or water utilities, particularly when new construction is involved. Increased CATV penetration rates and accelerated facilities based entry by CLECs into local telecommunications markets will expand further future opportunities for underground structure sharing. In addition, in high density urban areas, use of existing underground conduit is a much more economic alternative than excavating established streets and other paved areas.

Sharing of trenches used for buried cable is already the norm, especially in new housing subdivisions. In the typical case, power companies, cable companies and LECs simply place their facilities in a common trench, and share equally in the costs of trenching, backfilling and surface repair. Gas, water and sewer companies may also occupy the trench in some localities. Economic and regulatory factors are likely to increase further incentives for LECs to schedule and perform joint trenching operations in an efficient manner.

Aerial facilities offer the most extensive opportunities for sharing. The practice of sharing poles through joint ownership or monthly lease arrangements is already widespread. Indeed, the typical pole carries the facilities of at least three potential users – power companies, telephone companies and cable companies. Power companies and LECs typically share the ownership of poles through either cross-lease or

condominium arrangements, or through other arrangements such as one where the telephone company and power company each own every other pole. Cable companies have commonly leased a portion of the pole space available for low voltage applications from either the telephone company or the power company. Methods of setting purchase prices and of calculating pole attachment rates generally are prescribed by federal and state regulatory authorities.

The number of parties wishing to participate in pole sharing arrangements should only increase with the advent of competition in local telecommunications markets. Economic and institutional factors strongly support reliance on pole sharing arrangements. It makes economic sense for power companies, cable companies and telephone companies to share pole space because they are all serving the same customer. Moreover, most local authorities restrict sharply the number of poles that can be placed on any particular right-of-way, thus rendering pole space a scarce resource. The Federal Telecommunications Act reinforces and regulates the market for pole space by prescribing nondiscriminatory access to poles (as well as to conduit and other rights-of-way) for any service provider that seeks access. The aerial distribution share factors displayed below capture a forward-looking view of the importance of these arrangements in an increasingly competitive local market.

B.2. Structure Sharing Parameters

The Hatfield Model captures the effects of structure sharing arrangements through the use of user-adjustable structure sharing parameters. These define the fraction of total required investment that will be borne by the LEC for distribution and feeder poles, and for trenching used as structure to support buried and underground telephone cables. Since best forward looking practice indicates that structure will be shared among LECs, IXCs, CAPs, cable companies, and other utilities, default structure sharing parameters are assumed to be less than one. Incumbent telephone companies, then, should be expected to bear only a portion of the forward-looking costs of placing structure, with the remainder to be assumed by other users of this structure.

The default LEC structure share percentages displayed below reflect most likely, technically feasible structure sharing arrangements. For both distribution and feeder facilities, structure share percentages vary by facility type to reflect differences in the degree to which structure associated with aerial, buried or underground facilities can reasonably be shared. Structure share parameters for aerial and underground facilities also vary by density zone to reflect the presence of more extensive sharing opportunities in urban and suburban areas. In addition, LEC shares of buried feeder structure are larger than buried distribution structure shares because a LEC's ability to share buried feeder structure with power companies is less over the relatively longer routes that differentiate feeder runs from distribution runs. This is because power companies generally do not share trenches with telephone facilities over distances exceeding 2500 ft.[58]

[58] A LEC's sharing of trenches with power companies, using random separation between cables for distances greater than 2,500 feet requires that either the telecommunications cable have no metallic components (i.e., fiber cable), or that both companies follow "Multi-Grounded Neutral" practices (use the same connection to earth ground at least every 2,500 feet).

Default Values in HM 5.0

Structure Percent Assigned to Telephone Company						
	Distribution			Feeder		
Density Zone	Aerial	Buried	Under-ground	Aerial	Buried	Under-ground
0-5	.50	.33	1.00	.50	.40	.50
5-100	.33	.33	.50	.33	.40	.50
100-200	.25	.33	.50	.25	.40	.40
200-650	.25	.33	.50	.25	.40	.33
650-850	.25	.33	.40	.25	.40	.33
850-2,550	.25	.33	.33	.25	.40	.33
2,550-5,000	.25	.33	.33	.25	.40	.33
5,000-10,000	.25	.33	.33	.25	.40	.33
10,000+	.25	.33	.33	.25	.40	.33

B.3. Support

Actual values for the default structure sharing parameters were determined through forward-looking analysis as well as assessment of the existing evidence of structure sharing arrangements. Information concerning present structure sharing practices is available through a variety of sources, as indicated in the references to this section. The HM 5.0 estimates of best forward-looking structure shares have been developed by combining this information with expert judgments regarding the technical feasibility of various sharing arrangements, and the relative strength of economic incentives to share facilities in an increasingly competitive local market. The reasoning behind the Hatfield Model's default structure sharing parameters is described below.

Aerial Facilities:

As noted in the overview to this section, aerial facilities (poles) are already a frequently shared form of structure, a fact that can readily be established through direct observation. For all but the two lowest density zones, the Hatfield Model uses default aerial structure sharing percentages that assign 25 percent of aerial structure costs to the incumbent telephone company. This assignment reflects a conservative assessment of current pole ownership patterns, the actual division of structure responsibility between high voltage (electric utility) applications and low voltage applications, and the likelihood that incumbent telephone companies will share the available low voltage space on their poles with additional attachers.[59]

ILECs and Power Companies generally have preferred to operate under "joint use," "shared use," or "joint ownership" agreements whereby responsibility for poles is divided between the ILEC and the power company, both of whom may benefit from the presence of third party attachers. New York Telephone

[59] This sharing may be either of unused direct attachment space on the pole, or via co-lashing of other users' low voltage cables to the LEC's aerial cables. See, Direct Panel Testimony of Richard Wolf, Clay T. Whitehead, Donald Fiscella, David Peacock and Dr. Miles Bidwell on Behalf of the Electric Utilities, Case 95-C-0341: Pole Attachments, State of New York Public Service Commission, January 27, 1997.

reports, for example, that almost 63 percent of its pole inventory is jointly owned,[60] while, in the same proceeding, Niagara Mohawk Power Company reported that 58 percent of its pole inventory was jointly owned[61]. Financial statements of the Southern California Joint Pole Committee indicate that telephone companies hold approximately 50 percent of pole units[62]. Although proportions may vary by region or state, informed opinion of industry experts generally assign about 45 percent of poles to telephone companies. Note that both telephone companies and power companies may lease space on poles solely owned by the other.

While the responsibility for a pole may be joint, it is typically not equal. Because a power company commonly needs to use a larger amount of the space on the pole to ensure safe separation between its conductors that carry currents of different voltages (e.g., 440 volt conductors versus 220 volt conductors) and between its wires and the wires of low voltage users, the power company is typically responsible for a larger portion of pole cost than a telephone company.

Because of the prevalence of joint ownership, sharing, and leasing arrangements, it is unusual for a telephone company to use poles that are not also used by a power company. ILEC structure costs are further reduced by the presence of other attachers in the low voltage space. Perhaps the best example is cable TV. Rather than install their own facilities, CATV companies generally have leased low voltage space on poles owned by the utilities. Thus, the ILECs have been able to recover a portion of the costs of their own aerial facilities through pole attachment rental fees paid by the CATV companies. The proportion of ILEC aerial structure costs recoverable through pole attachment fees is now likely to increase still further as new service providers enter the telecommunications market.

As noted above, the other, most obvious reason for assigning a share of aerial structure costs as low as 25 percent to the ILEC is the way that the space is used on a pole. HM 5.0 assumes that ILECs install the most commonly placed pole used for joint use, a 40 foot, Class 4 pole.[63] Of the usable space on such a pole, roughly half is used by the power company which has greater needs for intercable separation. That leaves the remaining half to be shared by low voltage users, including CATV companies and competing telecommunications providers.

Thus, a) because ILECs generally already bear well less than half of aerial structure costs; b) because ILECs now face increased opportunities and incentives to recover aerial facilities costs from competing local service providers; c) because new facilities-based entrants will be obliged to use ILEC-owned structure to install their own networks; and, d) because the Telecommunications Act requires ILECs to provide nondiscriminatory access to structure as a means of promoting local competition, on a forward-looking basis, it is extremely reasonable to expect that ILECs will need, on average, to bear as little as 25 percent of the total cost of aerial structure.

---

[60] New York Telephone's Response to Interrogatory of January 22, 1997, Case 95-C-0341: Pole Attachments, State of New York Public Service Commission, January 27, 1997.

[61] Direct Panel Testimony of Richard Wolf, Clay T. Whitehead, Donald Fiscella, David Peacock and Dr. Miles Bidwell on Behalf of the Electric Utilities, Case 95-C-0341: Pole Attachments, State of New York Public Service Commission, January 27, 1997. These experts also predicted that sharing of poles among six attachers would not be uncommon.

[62] " Statement of Joint Pole Units and Annual Pole Unit Changes by Regular Members", Monthly Financial Statements of the Southern California Joint Pole Committee, October, 1996.

[63] Opinion of engineering team. Also, "The Commission {FCC} found that 'the most commonly used poles are 35 and 40 feet high, ...'" {FCC CS Docket No. 97-98 NPRM dtd 3/14/97 pg. 6, and 47 C.F.R. § 1.1402(c). A pole's "class" refers to the diameter of the pole, with lower numbers representing larger diameter poles.

Buried Facilities:

Buried structure sharing practices are more difficult to observe directly than pole sharing practices. Some insight into the degree to which buried structure is, and will be shared can be gained from prevailing municipal rules and architectural conventions governing placement of buried facilities. As mentioned in the overview, municipalities generally regulate subsurface construction. Their objectives are clear: less damage to other subsurface utilities, less cost to ratepayers, less disruption of traffic and property owners, and fewer instances of deteriorated roadways from frequent excavation and potholes.

Furthermore, since 1980, new subdivisions have usually been served with buried cable for several reasons. First, prior to 1980, cables filled with water blocking compounds had not been perfected. Thus, prior to that time, buried cable was relatively expensive and unreliable. Second, reliable splice closures of the type required for buried facilities were not the norm. And third, the public now clearly desires more out-of-sight plant for both aesthetic and safety related reasons. Contacts with telephone outside plant engineers, architects and property developers in several states confirm that in new subdivisions, builders typically not only prefer buried plant that is capable of accommodating multiple uses, but they usually dig the trenches at their own expense, and place power, telephone, and CATV cables in the trenches, if the utilities are willing to supply the materials. Thus, many buried structures are available to the LEC at no charge. The effect of such "no charge" use of developer-dug trenches reduces greatly the effective portion of total buried structure cost borne by the LEC. Note, too, that because power companies do not need to use a disproportionately large fraction of a trench – in contrast to their disproportionate use of pole space, and because certain buried telephone cables are plowed into the soil rather than placed in trenches, the HM 5.0 assumed LEC share of buried structure generally is greater than of aerial structure.

Facilities are easily placed next to each other in a trench as shown below:

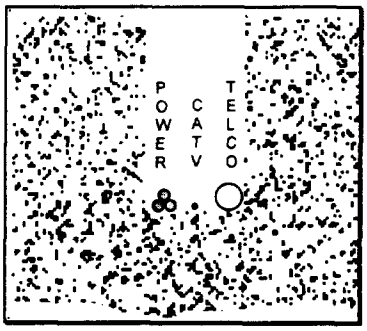

Underground Facilities:

Underground plant is generally used in more dense areas, where the high cost of pavement restoration makes it attractive to place conduit in the ground to permit subsequent cable reinforcement or replacement, without the need for further excavation. Underground conduit usually is the most expensive investment per foot of structure -- with most of these costs attributable to trenching. For this reason alone, it is the most attractive for sharing.

In recent years, major cities such as New York, Boston, and Chicago have seen a large influx of conduit occupants other than the local telco. Indeed most of the new installations being performed today are cable placement for new telecommunications providers. As an example, well over 30 telecommunications

providers now occupy ducts owned by Empire City Subway in New York City.[64] This trend is likely to continue as new competitors enter the local market.

[64] Empire City Subway is the subsidiary of NYNEX that operates its underground conduits in New York City.

References

Industry experience and expertise of HAI

The knowledge of AT&T and MCI outside plant engineers.

Outside Plant Consultants

Montgomery County, MD Subdivision Regulations

Policy Relating to Grants of Location for New Conduit Network for the Provision of Commercial Telecommunications Services

Monthly Financial Statements of the Southern California Joint Pole Committee.

Conversations with representatives of local utility companies.

New York Telephone's Response to Interrogatory of January 22, 1997, Case 95-C-0341: Pole Attachments , State of New York Public Service Commission, January 27, 1997.

Direct Panel Testimony of Richard Wolf, Clay T. Whitehead, Donald Fiscella, David Peacock and Dr. Miles Bidwell on Behalf of the Electric Utilities, Case 95-C-0341: Pole Attachments, State of New York Public Service Commission, January 27, 1997.

"Statement of Joint Pole Units and Annual Pole Unit Changes by Regular Members", Monthly Financial Statements of the Southern California Joint Pole Committee, October 1996.

APPENDIX C

Expenses in Hatfield Model 5.0

Expense Group: Network Expenses
Explanation: Maintenance and repair of various categories of investment - outside plant (e.g., NID, drop, distribution, Service Area Interface, Circuit equipment, Feeder plant) and Central office equipment (e.g., switch)
Data Origin: New England Telephone Company Incremental Cost Study (switching and circuit operating expenses), Hatfield Consultant (NID), FCC 1996 ARMIS 43-03 (everything else).

6212 Digital Electronic Expense
6230 Operator Systems Expense
6232 Circuit Equipment Expense
6351 Public
6362 Other Terminal Equipment
6411 Poles
6421 Aerial Cable
6422 Underground Cable
6423 Buried Cable
6426 Intrabuilding Cable
6431 Aerial Wire
6441 Conduit Systems

Amount Determination: Expense-to-Investment ratio (NET Study, ARMIS); Dollar per Line for NID.
Application: Determine cost by multiplying Expense-to-Investment ratio times modeled investments; Determine NID cost by multiplying Dollar-per-Line times number of lines

Expense Group: Network Operations
Explanation: Network related expenses needed to manage the network but not accounted for on a plant type specific basis
Data Origin: 1996 ARMIS 43-03

6512 Provisioning Expenses
6531 Power Expenses
6532 Network Administration
6533 Testing
6534 Plant Operations Administration
6535 Engineering

Amount Determination: Hatfield default Network Operations Factor 50% times the embedded amount in ARMIS.
Application: Determine cost by allocating to unbundled network elements (UNEs) equiproportionally relative to UNE direct costs. Cost of "Network Administration" is allocated to traffic sensitive (i.e., switching, signaling and interoffice) UNEs only.

Expense Group: Network Support and Miscellaneous
Explanation: Miscellaneous expenses needed to support day to day operations
Data Origin: 1996 ARMIS 43-03

6112 Motor Vehicles	Hatfield: Network Support
6113 Aircraft	Hatfield: Network Support
6114 Special Purpose Vehicles	Hatfield: Miscellaneous
6116 Other Work Equipment	Hatfield: Miscellaneous

Amount Determination: In essence, embedded ARMIS levels are scaled to reflect the relative change in either cable and wire (C&W) investment for Network Support Expenses or total investment for Miscellaneous Expenses in the modeled results versus ARMIS. For example:
Hatfield Cost
= Embedded ARMIS Expense x (Hatfield C&W Inv./ARMIS C&W Inv.)
The rationale is that these costs will be lower in a forward-looking cost study.
Application: Determine cost by allocating to unbundled network elements (UNEs) equiproportionally relative to direct costs

Expense Group: Other Taxes
Explanation: Taxes paid on gross receipts and property (i.e., 7240 Other Operating Taxes)
Data Origin: Hatfield expert estimate of 5% is based on overall Tier 1 Company ratio of ARMIS 7240 Expenses to ARMIS Revenues.
Amount Determination: Modeled costs are grossed up by 5%.
Application: Determine cost by allocating to unbundled network elements (UNEs) equiproportionally relative to direct costs.

Expense Group: Miscellaneous
Explanation: Miscellaneous expenses needed to support day to day operations
Data Origin: 1996 ARMIS 43-03
6122 Furniture
6123 Office Equipment
6124 General Purpose Computer
6121 Buildings
Amount Determination: In essence, embedded ARMIS levels are scaled to reflect the relative change in total investment in the Hatfield model versus ARMIS. For example:
Hatfield Cost
= Embedded ARMIS Expense x (Hatfield Tot. Inv./ARMIS Tot. Inv.)
The rationale is that these costs will be lower in a forward-looking cost study.
Application: Determine cost by allocating to unbundled network elements (UNEs) equiproportionally relative to direct costs.

Expense Group: Carrier-to-carrier customer service
Explanation: This category includes all carrier customer-related expenses such as billing, billing inquiry, service order processing, payment and collections. End-user retail services are not included in UNE cost development.
Data Origin: 1996 ARMIS 4304 (carrier-to-carrier cost to serve IXC access service)
7150 Service Order Processing
7170 Payment and Collections
7190 Billing Inquiry
7270 Carrier Access Billing System
Amount Determination: Hatfield multiplies embedded amount (across Tier 1 LECs) times 70% to get $1.69 per line per year. The cost is determined by multiplying the cost per line times the number of lines. This figure includes the above business office activities, hence there is no need for a separate non-recurring charge to account for this activities. The underlying data that the UNE costs were developed from include other types of non-recurring costs outside the business office. Most of the non-recurring costs are captured in the Hatfield UNE estimate.
Application: Determine cost by allocating to unbundled network elements (UNEs) equiproportionally relative to direct costs.

Expense Group: Variable Overhead
Explanation: Executive, Planning and General and Administrative costs
Data Origin: 1996 ARMIS 43-03

6711 Executive
6712 Planning
6721 Accounting & Finance
6722 External Relations
6723 Human Resources
6724 Information Management
6725 Legal
6726 Procurement
6727 Research & Development
6728 Other General & Administrative

Amount Determination: Hatfield estimates 10.4% multiplier based on AT&T public data.

		$Mill	Source
A	Rev. Net of Settlements	36,877	Form M 1994
B	Settlement Payout	4,238	Intl Traffic Data, 1994 data
C	Gross Revenues	41,115	A + B
D	Corporate Operations	3,879	Form M 1994
E	Revenue less Corp. Op.	37,236	C - D
F	Ratio	10.4%	D/E

Application: Cost is determined by multiplying the sum of all costs by 1.104.

Expense Group: Carrier-to-carrier Uncollectibles
Explanation: Revenues not realized associated with services provided (i.e., delinquency, fraud)
Data Origin: Company-specific ratio calculated from 1996 ARMIS 4304 Uncollectibles to 1996 ARMIS Access Revenues.
Amount Determination: Modeled costs are grossed up by the uncollectible rate.
Application: Determine cost by allocating to unbundled network elements (UNEs) equiproportionally relative to direct costs.

APPENDIX D

Network Operations Reduction

No matter what area of network operations one looks at, one observes a rich set of target opportunities for cost savings. In Account 6512, Network Provisioning, new technologies such as the Telecommunications Management Network (TMN) standards, procedures, and systems, and Digital Cross-Connect Systems (DCS) provide for much more centralized access and control, and self-provisioning by customers (including, and especially, knowledgeable CLECs). Given the tiered nature of TMN, where there are element, network, service, and business layers of management, some of the advantages of TMN will redound to the benefit of plant-specific expenses, while others, associated with the network, service and business management layers, will benefit the more-general activities included in network operations The use of Electronic Data Interchange, intranet technology, and technologies such as bar coding provide substantial opportunities to reduce the costs of the inventory component of this category of accounts. On the human resources side, there is a greater emphasis on quality control in provisioning activities, reducing incipient failures in the services and elements provided.

As far as power expenses, Account 6531, digital components typically consume less power than their analog counterparts. Furthermore, centralization in other expense categories also spills over into this category, since centralization implies fewer buildings to power less of the time. Finally, due to the onset of competition in the electric power industry and the greater regulatory scrutiny of new generation resources, the industry is increasingly willing to provide price reductions to large business (and, increasingly, even residential and small business) customers. It is now quite common for firms to participate in energy programs in which, in exchange for reducing consumption during peak hours, they receive substantial discounts in the cost of power.

Network Administration, Account 6532, benefits from the deployment of SONET-based transport, because many administration activities are oriented to reacting to outages, which are lessened with the deployment of newer technologies. Testing, Account 6533, also benefits from the better monitoring and reporting capabilities provided by TMN and SONET. This can lead to more proactive, better-scheduled preventative maintenance. On the human resources side, there is a growing tendency for testing activities to be taken over by contractors, leading to lower labor costs for the ILECs. To the extent the activities are still performed by telephone company personnel, they can be performed by personnel with lower job classifications. Finally, the use of "hot spares" can reduce the need for out-of-hours dispatch and emergency restoral activities. Overall, fiber and SONET projects are often "proven in" partly on the assumption that they will produce significant operational savings.

Plant Operations and Administration, Account 6534, is likely to require fewer supervisory personnel, and more involvement by the vendors of equipment to the ILECs. For instance, as vendors take over many of the installation and ongoing maintenance activities associated with their equipment, there will be fewer ILEC engineers requiring management. The use of multi-skilled craft people will allow for fewer specialists to be sent out to address particular problems, and less supervision to manage the people that are sent out. It will, for instance, allow for greater span of control in supervisory and management ranks.

Finally, Engineering, Account 6535, will be more focused on activities associated with positioning the ILECs in a multi-entrant marketplace, less on the engineering of specific elements and services, as those activities become more automated and more in the hands of the purchasers of unbundled elements. To the extent that engineering addresses particular projects, or categories of projects, the use of better planning tools, such as the ability to geocode customer locations and sizes, will act to reduce the amount of such activities.

Additional specific reasons for adjusting the embedded level of these expenses include the following:

Recognize industry trends and the opportunities for further reductions. Network operations expenses, expressed on a per line basis, have already declined over the past several years. For the reasons described in the previous section, this trend is expected to continue as modern systems and technologies are deployed.

Eliminate incumbent LEC retail costs from the network operations expense included in the cost for unbundled network elements. A number of the sub-accounts (6533 Testing and 6534 Plant Operations Administration) include costs that are specific to retail operations that are not appropriately included in the cost calculated for unbundled network elements. A portion of the expenses booked to these sub-accounts represent activities that new entrants, rather than the incumbent LEC, will be performing. Analysis indicates that, as a conservative measure, 20% of the expenses in these two sub-accounts represent such retail activities and should be excluded. Since these two sub-accounts represent 56% of the total booked network operations expense, it is reasonable to conclude that, at a minimum, an additional 11% reduction should be applied to the historic booked levels of network operations expense.

Incorporate incumbent LEC expectations of forward-looking network operations expense levels. The Benchmark Cost Proxy Model ("BCPM"), sponsored by PacTel, Sprint, and US West, consistently calculates a level network operations expense per line that is well below historic levels and below the level calculated by the Hatfield Model. This projection of forward-looking network operations expenses, prepared for and advocated by three incumbent LECs, indicates that the Hatfield Model adjustment to the embedded levels of these expenses are appropriate and necessary (and may yield cost estimates that are conservatively high).

Minimize double counting of network operations expenses. A careful review of the way ARMIS account 6530 and the related sub-accounts (6531 Power, 6532 Network Administration, 6533 Testing, 6534 Plant Operations Administration, and 6535 Engineering) are constructed makes it clear that further adjustment is necessary to accurately produce forward-looking costs. Many of the engineering and administrative functions that are included in these accounts are recovered by the incumbent LECs through non-recurring charges. Without such an adjustment, these costs may be double-recovered through existing non-recurring charges and simultaneously through the recurring rates based on the Hatfield Model results. Similarly, double recovery is possible because these accounts are constructed as so-called "clearance accounts" where expenses are booked before they are assigned to a specific project. Without an adjustment, these expenses could be recovered as service or element-specific costs and as the shared costs represented by network operations expense.

INDEX:

Aerial and Buried Drop Structure Fractions, 16
Aerial and Buried Terminal and Splice per Line, 17
Alternative Central Office Switching Expense Factor, 124
Alternative Circuit Equipment Factor, 124
Analog Line Circuit Offset for DLC Lines, per Line, 81
Annual to daily usage reduction factor, 89
Appendix A, 142
Appendix B, 143
Appendix C, 150
Appendix D, 153
Average Lines per Business Location, 16, 126
Billing/bill Inquiry, 122
Buried Copper Cable Sheath Multiplier, 23
Buried Drop Sharing Fraction, 15
BURIED EXCAVATION, 132
BURIED INSTALLATION AND RESTORATION, 132
Buried Sheath Addition-Fiber Interoffice, 96
Business Penetration Ratio, 83
Busy Hour Call Attempts
  Residential/Business, 90
Busy hour fraction of daily usage, 89
Busy Hour Fraction of Daily Usage, 89
C Link Cross-Section, 111
Cable
  24 Gauge & 26 Gauge, 19
  Distribution Cable Sizes, 19
  Distribution, Cost per foot Installed, 19
  Riser Cable, Size & Gauge, 21
Cable Cost
  Copper Feeder Cable Cost per foot, 65
  Copper Investment per Pair, 68
  Fiber Feeder Cable, 66
  Fiber Investment per Strand, 67
Call Completion Fraction, 87
Carrier-Carrier Customer Service per Line, 125
Channel Bank Investment, per 24 Lines, 93
Channel Unit Investment
  GR-303 & Low Density DLC Channel Unit Investment, 70
  T-1 Channel Unit Investment, 46
Common Equipment Investment
  GR-303 & Low Density DLC, 70
  Per additional increment of GR-303 & Low Density DLC capacity, 73
Conduit
  Innerduct Material Investment, 58
  Material Investment per foot, 24
  Material Investment per foot Graph, 24
  Spare ducts per route-Distribution & Feeder, 24
  Spare tubes per route-Distribution & Feeder, 24
  Spare tubes per route-Interoffice, 97
Copper Feeder
  Cable Cost per foot, 65
  Manhole Spacing, 55
  Pole Spacing, 56
  Structure Fractions, 54
Copper Feeder Pole Investment, 57
Copper Maximum Distance
  Local RT (per Cluster) Thresholds - Maximum Total Distance, 43
Corporate Overhead Factor, 122
COST OF CAPITAL AND CAPITAL STRUCTURE, 119
Dedicated Circuit Inputs
  Pairs per Dedicated Circuit, 51, 52
  Percentage of Dedicated Circuits, 51
DEPRECIATION AND NET SALVAGE, 120
Difficult Terrain Distance Multiplier, 41
Digital Cross Connect System, Installed, per DS-3, 94
Directory Listing, 123
Direct-routed Fraction of Local Inter-office, 103
Distribution Cable
  Cost per foot, Installed, 19
  Distribution Cable Sizes, 19
  Fill Factors, 39
  Riser Cable, Size & Gauge, 21
Distribution Pole Spacing, 39
DLC
  Analog Line Circuit Offset for DLC Lines, per Line, 81
  Channel Unit Investment, 70
  Common Equipment Investment per Additional Line Increment, 73
  Initial Common Equipment Investment, 70
  Integrated T-1 COT Investment, 46
  Lines per Channel Unit, 71
  Low Density DLC to GR-303 DLC Cutover, 71
  Maximum Line Size per Remote Terminal, 69
  Maximum Number of Additional Line Modules per Remote Terminal, 73
  Remote Terminal Fill Factor, 70
  Site and Power per Remote Terminal, 69

T-1 Channel Unit Investment per Subscriber, 46
Drop
Aerial & Buried Drop Structure Fractions, 16
Aerial Drop Placement-Labor Components, 14
Aerial Drop Wire Material Cost per foot, 17
Buried Drop Placement-Cost per foot-Graph, 14
Buried Drop Sharing Fraction, 15
Buried Drop Wire Material Cost per foot, 17
Drop Distance, 13
Drop Placement-Aerial & Buried, 13
Drop Wire Material Cost per foot Graph, 18
Pairs per Aerial Drop, 17
Pairs per Buried Drop, 17
DS-0/DS-1 Terminal Factor, 126
DS-1/DS-3 Terminal Factor, 126
End Office Non Line-Port Cost Fraction, 124
End Office Switching Investment Constant Term, 82
End Office Switching Investment Slope Term, 82
Entrance Facility Distance from Serving Wire Center & IXC POP, 107
EXCAVATION AND RESTORATION, 128
EXPENSE, 119
Expenses in Hatfield 4.0 Model, 150
Feeder Steering
Feeder Steering Enable, 43
Main Feeder Route/Air Multiplier, 44
Fiber Cable Investment
Interoffice, 94, 95
Fiber Feeder
Buried Fiber Sheath Addition, 62
Copper Feeder Maximum Distance, 72
Copper/Fiber Break-even distance, 72
Fiber Feeder Cable Cost per foot, 66
Fiber Strands per Remote Terminal, 71
Optical Patch Panel Investment, 72
Pullbox Investment-Fiber Feeder, 78
Pullbox Spacing, 61
Structure Fractions, 60
Fiber feeder distance threshold, 72
Fill Factors
Copper Feeder Cable, 63
Distribution Cable, 39
Fiber Feeder, 63
Remote Terminal Fill Factor, 70
Forward-looking Network Operations Factor, 123
Fraction of BHCA Requiring TCAP, 112
Fraction of Interoffice Structure Common with Feeder, 100
Fraction of SA Lines Requiring Multiplexing, 94
Fraction of Structure Assigned to Telephone, 100
GR-303 DLC remote terminal fill factor, 70
Hard Rock Placement Multiplier, 41
Holding Time Multiplier
Residential, 90
Host – Remote Parameters
Host – Remote Assignment Enable, 118
Host – Remote CLLI Assignments, 118
Host-Remote Fraction of Interoffice Traffic, 105
ICO C-Link / Tandem A-Link Investment, per Line, 118
ICO Local Tandem Investment, per Line, 116
ICO Local Tandem Wire Center Investment, per Line, 117
ICO OS Tandem Investment, per Line, 116
ICO OS Tandem Wire Center Investment, per Line, 117
ICO PARAMETERS, 116
ICO SCP Investment, per Line, 116
ICO STP Investment, per Line, 116
ICO STP/SCP Wire Center Investment, per Line, 117
Income Tax Rate, 122
Initial Common Equipment Investment
GR-303 & Low Density DLC, 70
Innerduct Material Investment, 58
InterLATA Interstate Calls Completed, 87
InterLATA Intrastate Calls Completed, 87
Interoffice Pole Material and Labor, 99
Interoffice Structure Sharing Fraction, 100
Interoffice Transmission Terminal Configuration (Fiber Ring), 142
Interstate bus/res DEMs, 89
Interstate Business/Residential DEMs, 89
Interstate DEMs, Thousands, 88
IntraLATA Calls Completed, 87
Intrastate bus/res DEMs, 89
Intrastate Business/Residential DEMs, 88
Intrastate DEMs, Thousands, 88
Investment per Operator Position, 114
ISUP Message Length, 111
ISUP Messages per Interoffice BHCA, 111
Labor Adjustment Factor, 25
Lines per Channel Unit-GR-303 & Low Density DLC, 71
Link Occupancy, 110
Link Termination, 110
LNP Cost, per Line, 125
Local Bus/Res DEMs Ratio, 88

Local Business/Residential DEMs Ratio, 88
Local Call Attempts, 87
Local DEMs, Thousands, 88
Local RT (per Cluster) Thresholds - Maximum Total Distance, 43
Long Loop Investments, 45
  Integrated T-1 COT Investment, 46
  Maximum T1s per Cable, 47
  Remote Terminal Fill Factor, 47
  T-1 Channel Unit Investment per Subscriber, 46
  T-1 Repeater Investments, 45
Low Density DLC
  Low Density DLC to GR-303 DLC Cutover, 71
Low Density DLC to GR-303 DLC Cutover, 71
Manhole Investment
  Interoffice, 98
Manholes
  Dewatering Factor for Manhole Placement, 76
  Manhole Excavation & Backfill Graph, 77
  Manhole Investment-Copper Feeder, 75
  Manhole Material Graph, 75
  Pullbox Investment-Fiber Feeder, 78
  Pullbox spacing-Fiber Feeder, 61
  Pullbox spacing-Interoffice, 98
  Spacing-Copper Feeder, 55
  Water Table Depth for Dewatering, 76
Maximum Line Size per Remote Terminal, 69
Maximum Nodes per Ring, 105
Maximum Number of Additional Line Modules per Remote Terminal, 73
Maximum Trunk Occupancy, 102
Maximum Utilization per Operator Position, 114
MDF/Protector Investment per Line, 81
Network Operations Reduction, 153
NID
  Business NID - No Protector, 11
  Business NID (6 Pair) without Protector-Material Graph, 12
  Indoor NID Case, 12
  NID Protection Block per Line, 11, 12
  NID Protector Block per Line-Material Graph, 11
  Residential NID Cost without Protector, 9
  Residential NID without Protector-Material Graph, 10
NID Expense, 125
NID Investment
  Default Values, 9
Number of Strands per ADM, 95
Operator Intervention Factor, 114
Operator Traffic Fraction, 102
Optical Distribution Panel-Interoffice, 92
Optical Patch Panel Investment, Fiber Feeder, 72
OTHER EXPENSE INPUTS, 122
Other Taxes Factor, 122
OVERVIEW, 8
Pairs per Dedicated Circuit, 51, 52
Percentage of Dedicated Circuits, 51
Placement of Transport, 96
Pole Investment
  Copper Feeder, 57
  Distribution, 22
  Material & Labor Cost Graph, 22
Pole Spacing
  Copper Structure, 56
  Interoffice, 99
Poles
  Interoffice Pole Material & Labor, 99
  Pole Spacing-Feeder, 56
  Spacing - Distribution, 39
POPs per Tandem Location, 104
Port Limit, Trunks, 106
Power Investment, 84
Prices
  Potential Retaliation Against Suppliers, 8
  Telecommunications Suppliers, 8
Processor Feature Loading Multiplier, 83
Public Telephone Investment, 114
Pullbox Investment
  Fiber Feeder, 78
  Interoffice, 98
Pullbox Spacing
  Fiber Feeder, 61
  Interoffice, 98
Real Time Limit, BHCA, 106
Real Time Limit, BHCA, Trunks, 106
Regenerator Investment, 93
Regenerator Spacing, 93
Regional Labor Adjustment Factor, 25
  Effect on Aerial Drop Installation, 32
  Effect on Buried Drop Installation, 32
  Effect on Buried Installation, 26
  Effect on Conduit Installation, 27
  Effect on Copper Distribution Cable Installation, 28, 29
  Effect on Copper Feeder Cable Installation, 29
  Effect on Fiber Feeder Cable Installation, 30
  Effect on Fiber Pullbox Installation, 28
  Effect on Indoor SAI Installation, 31
  Effect on Manhole Installation, 27
  Effect on NID Installation, 31, 32
  Effect on Outdoor SAI Installation, 30

Table of State Values, 33
Remote Terminal Fill Factor, 70
Remote-Host Fraction of Interoffice Traffic, 104
Repeaters
T-1 Repeater Investments, Long Loops, 45
Riser Cable Size and Cost per Foot, 21
Rock Depth Threshold, Inches, 41
SAI Investment, 48
SCP Investment per Transaction per Second, 113
Sharing
Buried Drop Sharing Fraction, 15
Sidewalk/Street Fraction, 43
Signaling Link Bit Rate, 110
Site and Power per Remote Terminal, 69
Soft Rock Placement Multiplier, 42
Spare Conduit tubes per route-Distribution & Feeder, 24
Spare ducts per route-Distribution & Feeder, 24
Spare tubes per route-Interoffice, 97
STP Link Capacity, 109
STP Maximum Common Equipment Investment, per Pair, 109
STP Maximum Fill, 109
STP Minimum Common Equipment Investment, per Pair, 109
Structure Fractions
Copper Feeder, 54
Distribution, 35
Fiber Feeder, 60
Fraction of Buried Available for Shift, 36
Structure Percentages
Interoffice, 96
Structure Shares Assigned to Incumbent Local Telephone Companies, 143
Structure Sharing
Interoffice, 100
STRUCTURE SHARING FRACTION, 121
SURFACE TEXTURE MULTIPLIER, 136
Switch Installation Multiplier, 81
Switch maximum line size, 80
Switch Maximum Processor Occupancy, 80
Switch Port Administrative Fill, 80
Switch Real-time Limit, Busy Hour Call Attempts, 79
Switch Room Size, 84
Switch Traffic Limit, BHCCS, 79, 80
T-1 Channel Unit Investment per Subscriber, 46
T-1 COT, Installed, 46
T-1 Repeater Investments, Installed, 45
Tandem Common Equipment Intercept Factor, 107
Tandem Common Equipment Investment, 106
Tandem Real Time Occupancy, 107
Tandem Routed % of Total InterLATA Traffic, 103
Tandem Routed % of Total IntraLATA Traffic, 103
Tandem/EO wire center common factor, 84
TCAP Message Length, 112
TCAP Messages per Transaction, 112
Terminal
Terminal Material Cost Graph, 17
Terminal Investment-Interoffice
EF&I Labor Cost, per hour, 92
EF&I Labor Hours, 92
Fiber Pigtails, 91
Number of Fibers, 91
Optical Distribution Panel, 92
Transmission Terminal Investment, 91
Terminals
Aerial Terminal & Splice per Line, 17
Buried Terminal & Splice per Line, 17
Terrain
Distribution Distance Multiplier, Difficult Terrain, 41
Hard Rock Placement Multiplier, 41
Rock Depth Threshold, Inches, 41
Rock Saw/Trenching Ratio Graph, 42
Soft Rock Placement Multiplier, 42
Threshold Value for Off-Ring Wire Centers, 104
Total Interoffice Traffic Fraction, 102
Transmission Terminal Fill (DS-0 level), 94
Transport Placement, 96
Trunk Fill (Port Occupancy), 106
Trunk Termination Investment, 102
Trunk Utilization, 127
UNDERGROUND EXCAVATION, 128
UNDERGROUND RESTORATION, 128
Wire Center
Construction Costs, 85
Land Price, 85
Lot Size, 84

Georgia / Alltel Georgia Communications Corp

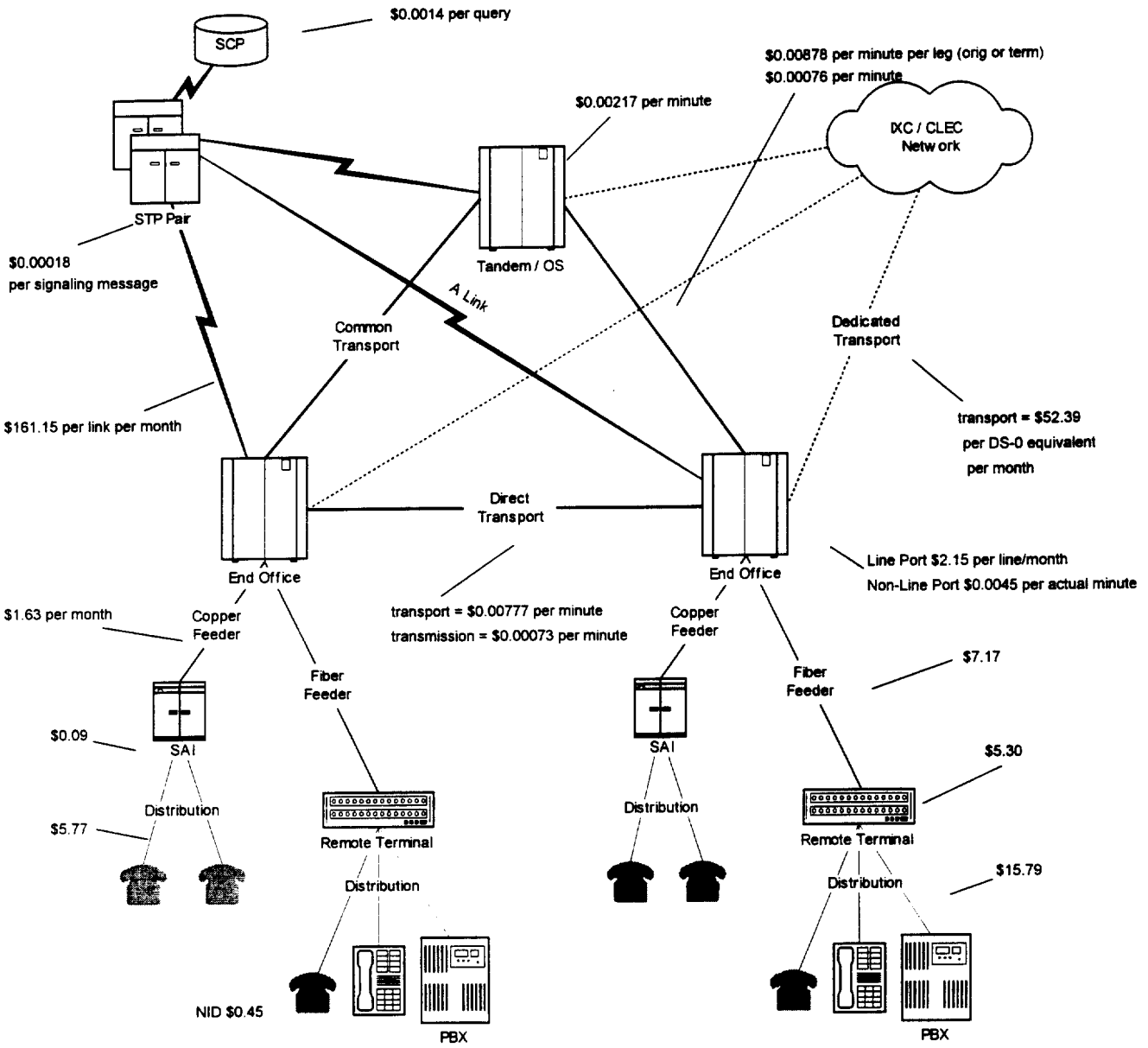

STATE FUND ANALYSIS												
Annual Support for line types:	**Specify**	**Bench mark**										
Primary residence lines	X	**$31.00**	$ 6,849,218	$ 14,975,252	$ -	$ -	$ -	$ -	$ -	$ -	$ -	$ 21,824,470
Secondary residence lines		**$31.00**	$ 626,483	$ 1,300,868	$ -	$ -	$ -	$ -	$ -	$ -	$ -	$ 1,927,351
Single line business lines	X	**$51.00**	$ 5,039	$ -	$ -	$ -	$ -	$ -	$ -	$ -	$ -	$ 5,039
Multline business lines		**$51.00**	$ 22,224	$ -	$ -	$ -	$ -	$ -	$ -	$ -	$ -	$ 22,224
Public lines		**$51.00**	$ 957	$ -	$ -	$ -	$ -	$ -	$ -	$ -	$ -	$ 957
Support cost if all lines supported			$ 7,503,921	$ 16,276,119	$ -	$ -	$ -	$ -	$ -	$ -	$ -	$ 23,780,040
Total annual support for specified lines			**$ 6,854,257**	**$ 14,975,252**	**$ -**	**$ -**	**$ -**	**$ -**	**$ -**	**$ -**	**$ -**	**$ 21,829,509**
@75% State allocation			$ 5,140,693	$ 11,231,439	$ -	$ -	$ -	$ -	$ -	$ -	$ -	$ 16,372,132
@Implied 25% Federal allocation			$ 1,713,564	$ 3,743,813	$ -	$ -	$ -	$ -	$ -	$ -	$ -	$ 5,457,377

TOTAL FUND ANALYSIS										
25% Federal allocation from Federal Fund Analysis	$ 1,713,564	$ 3,743,813	$ -	$ -	$ -	$ -	$ -	$ -	$ -	$ 5,457,377
75% State allocation from State Fund Analysis	$ 5,140,693	$ 11,231,439	$ -	$ -	$ -	$ -	$ -	$ -	$ -	$ 16,372,132
Total Federal + State fund	**$ 6,854,257**	**$ 14,975,252**	**$ -**	**$ -**	**$ -**	**$ -**	**$ -**	**$ -**	**$ -**	**$ 21,829,509**

Module release date: 11/4/97

COST OF NETWORK ELEMENTS

Georgia

Alltel Georgia Communications Corp

Loop elements	0-5 lines/sq mi	5-100 lines/sq mi	100-200 lines/sq mi	200-650 lines/sq mi	650-850 lines/sq mi	850-2550 lines/sq mi	2550-5000 lines/sq mi	5000-10000 lines/sq mi	>10000 lines/sq mi	Totals
NID										
Annual Cost	$ 52,456	$ 558,460	$ 219,606	$ 280,980	$ 59,314	$ 280,891	$ 22,136	$ -	$ -	$ 1,473,843
Unit Cost/month	0.52	0.49	0.45	0.43	0.39	0.39	0.33	-	-	0.45
Loop Distribution (DLC)										
Annual Cost	$ 3,906,967	$ 22,828,570	$ 5,373,904	$ 5,061,550	$ 1,045,864	$ 1,747,279	$ -	$ -	$ -	$ 39,964,134
Unit Cost/month	39.02	21.62	12.31	9.57	7.84	6.34	-	-	-	15.79
Loop Distribution (non-DLC)										
Annual Cost	$ -	$ 602,878	$ 353,072	$ 811,620	$ 89,634	$ 2,432,044	$ 217,556	$ -	$ -	$ 4,506,804
Unit Cost/month	-	7.48	6.20	6.80	4.66	5.55	3.24	-	-	5.77
Loop Distribution (all)										
Annual Cost	$ 3,906,967	$ 23,431,448	$ 5,726,976	$ 5,873,170	$ 1,135,499	$ 4,179,323	$ 217,556	$ -	$ -	$ 44,470,938
Unit Cost/month	39.02	20.62	11.61	9.06	7.43	5.86	3.24	-	-	13.43
Loop Concentration (DLC)										
Annual Cost	$ 1,411,615	$ 6,627,157	$ 1,777,083	$ 2,059,758	$ 470,932	$ 1,056,608	$ -	$ -	$ -	$ 13,403,153
Unit Cost/month	14.10	6.28	4.07	3.89	3.53	3.84	-	-	-	5.30
Loop Concentration (non-DLC)										
Annual Cost	$ -	$ 8,856	$ 5,552	$ 10,878	$ 1,273	$ 39,709	$ 5,115	$ -	$ -	$ 71,382
Unit Cost/month	-	0.11	0.10	0.09	0.07	0.09	0.08	-	-	0.09
Loop Concentration (all)										
Annual Cost	$ 1,411,615	$ 6,636,013	$ 1,782,635	$ 2,070,636	$ 472,205	$ 1,096,317	$ 5,115	$ -	$ -	$ 13,474,536
Unit Cost/month	14.10	5.84	3.61	3.19	3.09	1.54	0.08	-	-	4.07
Loop Feeder (DLC)										
Annual Cost	$ 4,179,531	$ 11,905,198	$ 849,205	$ 735,604	$ 133,829	$ 347,939	$ -	$ -	$ -	$ 18,151,305
Unit Cost/month	41.74	11.28	1.95	1.39	1.00	1.28	-	-	-	7.17
Loop Feeder (non-DLC)										
Annual Cost	$ -	$ 171,190	$ 130,504	$ 187,959	$ 37,153	$ 689,756	$ 56,323	$ -	$ -	$ 1,272,886
Unit Cost/month	-	2.12	2.29	1.58	1.93	1.57	0.84	-	-	1.63
Loop Feeder (all)										
Annual Cost	$ 4,179,531	$ 12,076,387	$ 979,709	$ 923,562	$ 170,982	$ 1,037,695	$ 56,323	$ -	$ -	$ 19,424,190
Unit Cost/month	41.74	10.63	1.99	1.42	1.12	1.45	0.84	-	-	5.87
Total Loop (DLC)										
Annual Cost	$ 9,550,569	$ 41,879,770	$ 8,194,461	$ 8,086,173	$ 1,702,464	$ 3,260,254	$ -	$ -	$ -	$ 72,673,690
Unit Cost/month	95.38	39.67	18.77	15.29	12.75	11.84	-	-	-	28.72
Total Loop (non-DLC)										
Annual Cost	$ -	$ 822,538	$ 514,465	$ 1,062,175	$ 135,536	$ 3,333,972	$ 301,130	$ -	$ -	$ 6,169,817
Unit Cost/month	-	10.20	9.04	8.90	7.04	7.61	4.49	-	-	7.90
Total Loop (all)										
Annual Cost	$ 9,550,569	$ 42,702,309	$ 8,708,926	$ 9,148,348	$ 1,838,000	$ 6,594,226	$ 301,130	$ -	$ -	$ 78,843,507
Unit Cost/month	95.38	37.58	17.65	14.11	12.03	9.24	4.49	-	-	23.81
Total lines	8,344	94,704	41,118	54,022	12,728	59,454	5,588	-	-	275,959
Total lines served by DLC	8,344	87,986	36,374	44,079	11,124	22,950	-	-	-	210,857