The VHF/UHF Refarming mask D for 25 kHz bandwidth should be broadened to

Fd = 0-11.875 kHz	attenuation = 0 dB
Fd = 11.875-18.75 kHz	attenuation = 7.27(Fd-2.88 kHz) dB
Fd = 18.75 kHz	attenuation = lower of 50 + 10*log(P) or 70 dB

The broadening of the mask allows 12.5 kHz bandwidth voice channel to be adjacent to a 25 kHz or wider data channel with identical adjacent channel interference into the 12.5 kHz bandwidth channel.

82. For the various types of emissions, the following designators should be used which conform to the existing FCC methodology for characterizing the modulation and transmission of signals:

analog 12.5 kHz bandwidth = 11K3F3E (11.25 KHz bandwidth)

digital 12.5 kHz bandwidth = 11K3F1D

digital voice in 12.5 kHz bandwidth = 11K3F1E

25 kHz bandwidth channels = 23K8F1D (23.75 kHz bandwidth)

The designator for the 150 kHz channels will be determined pending further action in APCO Project 34 which NPSTC supports.

83. **NPSTC recommends the following channel bandwidths based upon type of communication:**

a) analog voice or integrated voice/data channels = 12.5 kHz bandwidth

(voice, tones, or raw data rates up to 9.6 kbps)

Can aggregate even multiples of 12.5 kHz as long as equivalent spectrum efficiency is met.

b) wideband data = 25 kHz bandwidth

(raw data rates of 9.6 kbps, typically 19.2 kbps up to possibly raw data rates of 56kbps)

c) image & High Speed Data = 150 kHz bandwidth

(raw data rates of 384 kbps or greater)

d) video = multiples of 150 kHz bandwidth

(digitized video data rate of 384 kbps or greater)

84. In the context of paragraphs 163 -165 of the Notice, the frequency stability standards for the 746-806 MHz bands should be kept the same as the current 821/866 MHz band with fixed stations at 1.0 ppm and mobile stations at 1.5 ppm.

85. The purpose of an emission mask is to limit unwanted emissions into the adjacent channels. The authorized bandwidth has traditionally been based upon Carson's Rule for FM modulation. Basically 99% of the power is contained within the authorized bandwidth and 1% is outside the authorized bandwidth (1/2% above channel and 1/2% below channel) and therefore the 1/2% power point is 23dB down from the total carrier power. Analog FM modulation usually has a triangular shaped response. Digital modulations and emerging linearized modulations have a narrow square response in the center with significant sidelobes. Center of emission bandwidth does not affect adjacent channel interference significantly, therefore, center of emission mask can be opened up (top-hat).

86. Emission masks usually provide attenuation to the center of the adjacent channel. This usually requires geographic isolation between adjacent channels. This also means there is a significant amount of power received by the receiver at the edge of its receive window. The narrower the receiver bandwidth (or better selectivity), the lower the amount of power coupled into the receiver from an adjacent channel transmitter/modulation.

87. Receiver selectivity should be regulated or defined by consensus standards. Known receiver selectivity performance is needed for frequency planning. For efficient spectrum usage, it is necessary to know the amount of power coupled from a transmitter/modulation into an adjacent receiver/bandwidth.

88. **With respect to the maximum transmitter power levels for units operating in the public safety 746-806 MHz band, NPSTC recommends the following:**

Portable radios = 3 watts (average into antenna)

Mobile radios = 30 watts (average into antenna)

Control Stations = 30 watts (average), but the power level should be reduced so that level into fixed receivers (or first amplifier after the antenna in a fixed receiver network) is less than -85 dBm.

Fixed Base Station and Repeater = no maximum transmitter power limitation, but use ERP and/or antenna pattern limitations to meet co-channel geographic frequency coordination requirements.

89. In the context of paragraph 166mof the Notice, the protection criteria for co-channel and adjacent channels should be assigned in accordance with protection criteria established in the National Plan. This methodology allows criteria to be based on the actual defined service/coverage areas and channel bandwidth allocations of systems by the planning committees under the direction of a National Plan.

90. In the context of paragraphs 168 and 169 of the Notice, construction deadlines in the Public Safety field are influenced greatly, as the Commission indicates, by multi-year cycles for the planning, approval, funding and purchasing of their systems. This procedure is followed generally by State and Local government, whether the system is conventional or trunked. We would recommend that the Commission consider requiring licensees to provide detailed implementation progress reports on a two, year cycle for either type system. Failure to make a proper showing to, and approval of, the planning committees is cause for loss of license.

91. In the context of paragraphs 167 - 169, Public safety radio systems are typically constructed through governmental funding. Construction timeframe requirements should be based on detailed implementation documentation presented to the planning committees. A large trunked system, for example, may require phased in construction and a transition from existing bands with system links enabling transparent operation of its public safety officials. The construction authorization time should be based on the entity's ability to document the availability of funding for design, construction, and the ability to load the system. The Commission considers uniformly granting governmental entities construction deadlines of two or three years with up to five years with appropriate documentation. NPSTC supports this, however, believes that the planning committees should be to decide if the construction time extensions should be granted based on the documentation presented to them.

XX. USE OF CHANNELS 63, 64, 68, AND 69 FOR PUBLIC SAFETY

92. In paragraphs 170 and 171 of the Notice, the proposal to allocate 764 - 776 and 794 - 806 MHz for Public Safety represents an excellent choice. By pairing channels 63 and 64 (764 - 776 MHz) with the channels 68 and 69 (794 - 806 MHz) it will be possible to achieve 30 MHz transmit and receive separation. This is vital, as the major portion of this spectrum will most likely be used by full or half duplex, conventional or trunked systems. Public Safety communications systems use repeater station operation for improved communication between low power portable and mobile units. Due to the propagation characteristics of this portion of the spectrum, repeater operation is essential.

93. Reallocation of Channels 68 and 69 (794 - 806 MHz) from broadcast to Public Safety is particularly important, because it is immediately adjacent to the 806 - 824 MHz mobile transmit band and will eliminate existing band-edge receiver interference and geographic separation issues at existing repeater/base station sites in many cities.

XXI. PROTECTION OF TELEVISION SERVICES

94. In the context of paragraph 231, during the transition period, while broadcast television migrates out of the 746-806 MHz band, NPSTC strongly endorses the proposal to use the 40 dB protection ratio rather than the 50 dB protection ratio currently used in most of the 470-512 MHz band. Experience with the 40 dB protection ratio, where used, demonstrates clearly that no unacceptable interference to TV broadcast signals has occurred. It must, however, be strongly emphasized that simply applying the 40 dB protection ratio requirements contained in Table B of

section 90.309 of the current rules would not provide the appropriate geographical separation requirements in this spectrum. Application of the current criteria would result in geographical separation requirement far greater than the laws of physics require. The net effect, contrary to the goals for this rulemaking as defined by the Commission, would be a failure to achieve the most efficient use of this spectrum.

95. In the context of paragraph 237 of the Notice, the formulation of new interference protection geographic separation requirements, similar to Table B of the current rules is strongly recommended. While the use of such tables may mean that the maximum optimization will not be achieved in each and every situation that might be available through the use of specific formulas that can perform calculations based on the exact values for the various characteristics such as ERP and HAAT, the ease of use of such tables and licensees' familiarity with such tables more than counteracts for the minuscule loss of optimization. However, because the Table must assure that the loss of optimization is minimized, it is especially important to assure that the protection ratio applied in the calculations accurately reflects all relevant circumstances. Several characteristics of the 746-806 MHz band are significantly different from the 470-512 MHz band, thereby making application of the current Table B unnecessarily non-optimum.

96. A significant difference is propagation path loss. The loss in the 746-806 MHz band is much greater than the loss in the 470-512 MHz band. Analysis leads one to the conclusion that the propagation path loss in the 746-806 MHz band is approximately 5.3 dB greater than in the 470-512 MHz band. This is one factor that must be considered as an adjustment to the 40 dB protection

ratio for calculating geographic separation. Beyond simple propagation path loss another factor which must be considered, as it reduces the interfering signal from land mobile radio into TV receivers, is the front-to-back ratio for TV receiving antennas. Measurements show that the 15 dB number referenced in the First Report and Order in Docket No. 18261, which was adopted on May 20, 1970, is still a conservative adjustment to use for calculating realistic protection ratios. Just this adjustment and the propagation loss adjustment equate to a total 20.3 dB adjustment in the protection ratio.

97. Furthermore there are a number of additional factors which were considered in the calculations in Docket No. 18261, that could be used to further adjust the protection ratio, before calculating the appropriate geographic separation parameters for the 746-806 MHz band. However, to maintain a conservative approach in calculating the separation requirements and to assure no unexpected increase in interference to TV, it is not recommended that any adjustments other than propagation path loss and front to back ratios of TV receiver antennas be used to adjust the 40 dB protection ratio.

98. Using the 20.3 dB protection ratio adjustment and the computer algorithm in FCC/OCE RS76-01 for FCC Research Division Report No. R-6602 curves, enhancements in maximum effective radiated power and/or shorter geographical spacing distances can be calculated. Preliminary calculations indicate that geographic separation distances which range from 90 miles to 130 miles in the current Table B will be reduced to the range of 65 miles to 90 miles.

99. In the context of paragraph 235 of the Notice, all of the foregoing addresses the issue of land mobile interference to existing NTSC stations in the 746-806 MHz band during the transition. Different planning factors should be used for DTV stations operating during the transition. However, actual implementation of DTV has not occurred as yet, so that no actual measurements have taken place. It is difficult, if not impossible to quantify these planning factors at this time, but some things are reasonably well accepted. Paramount is the fact that even though the maximum allowed DTV transmitter power is lower than NTSC, DTV will be less susceptible to interference because the required carrier to interference ratio required for acceptable DTV performance is far less, and because the carrier to noise ratio for DTV is also far better. Therefore, applying the analog separation requirements in the DTV case will provide interference protection greater than what is required.

XXII CONCLUSION

NPSTC urges the Commission to move swiftly to adopt rules and regulations for the use of the Public Safety spectrum in the 746 MHz to 806 MHz band consistent with the proposals and positions put forth in this document.

Respectfully Submitted,

Marilyn B. Ward
Interim Chairperson
National Public Safety Telecommunications Council

December 22, 1997

National Public Safety Telecommunications Council

SPECTRUM ALLOCATION RECOMMENDATIONS for the PUBLIC SAFETY portion of 746-806 MHZ

December 12, 1997

Appendix A

PS764PLN.PPT

NPSTC 746-806 MHz Plan in each TV Channel Pair

- Wideband data/digital video channels (3.600 MHz)
  - 12 general usage pairs
    - paired, 150 kHz bandwidth, >= 384 kbps data rate
- Medium bandwidth data channel (0.300 MHz)
  - 6 general usage pairs
    - paired, 25 kHz bandwidth, >= 19.2 kbps data rate
    - split out from 1 additional 150 kHz wideband data channel
- Integrated voice and data channels (5.000 MHz)
    - 200 pairs, 12.5 kHz bandwidth
    - voice or <= 9.6 kbps data
  - 144 general usage
  - 40 Regional or Statewide usage
  - 10 Statewide usage
  - 6 Vehicular Repeater and/or Simplex channels
- Interoperability (1.000 MHz)
- Reserve (2.100 MHz)

Interoperability Channels in each TV Channel Pair

- 1 wideband digital video channel (0.300 MHz)
  - paired, 150 kHz bandwidth, >= 384 kbps data rate
- 1 wideband data channel (0.300 MHz)
  - paired, 150 kHz bandwidth, >= 384 kbps data rate
- 10 integrated voice/data channels (0.250 MHz)
  - paired, 12.5 kHz bandwidth, voice or <= 9.6 kbps data
  - 1 coordination channel (open to Public Safety & Public Service)
  - 1 EMS channel
  - 1 Fire channel
  - 1 Law Enforcement channel
  - 1 Public Safety/Public Service shared channel
  - 5 tactical channels
- 12 simplex channels for tactical operations (0.150 MHz)
  - 3 Public Safety/Public Service shared 12.5 kHz tactical freq's
  - 9 Public Safety 12.5 kHz tactical frequencies

746-806 MHz Band Plan Proposal

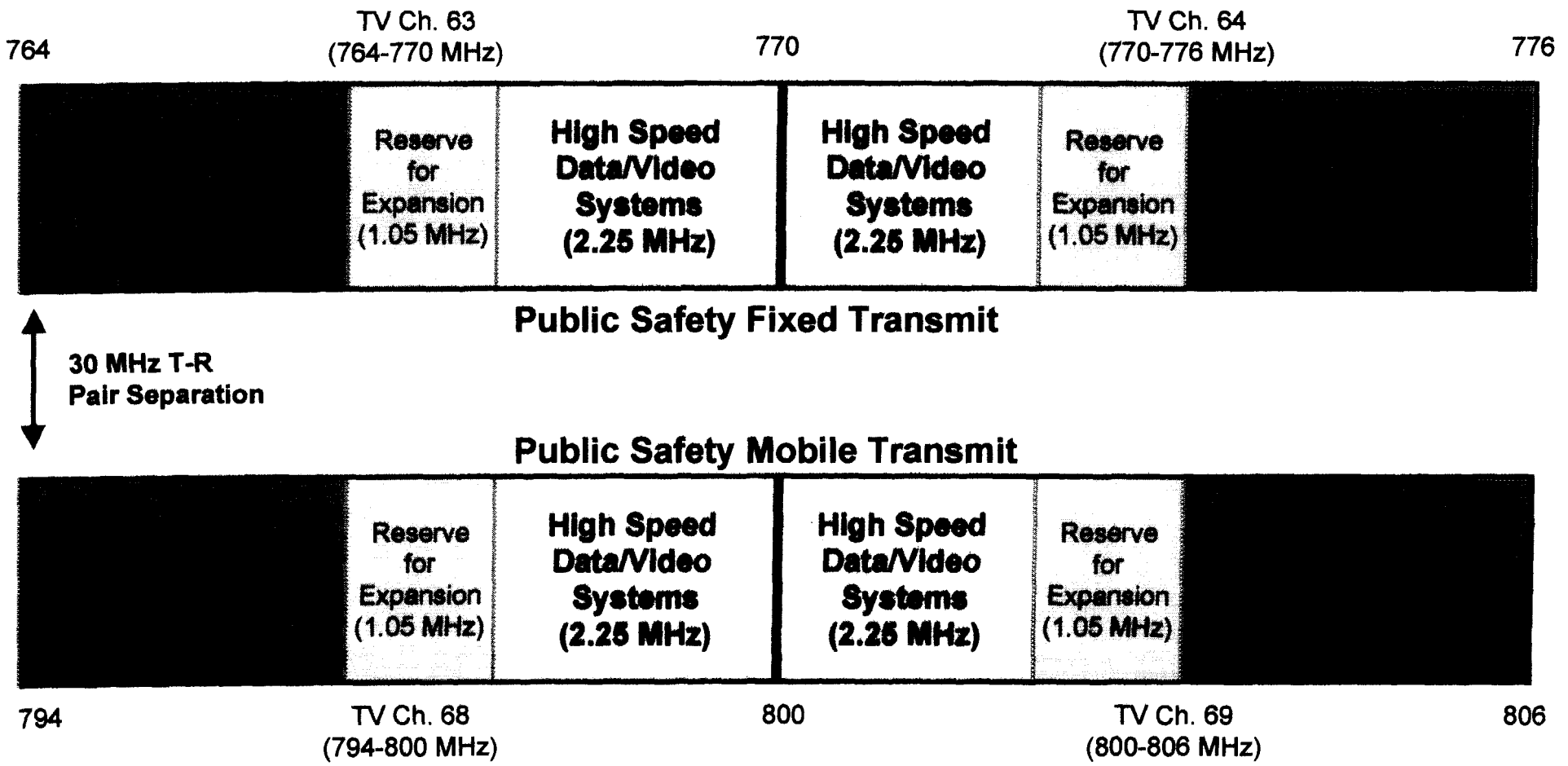

Because of the potential for TV blockage by early adopters, proposal is for both voice and data within each 6 MHz TV Channel block. Therefore, if early adopters can only obtain one pair (63/68 or 64/69) they can implement both voice and data systems.

Usage Blocks in TV Ch 63/68
(764/794.000-766/796.700)

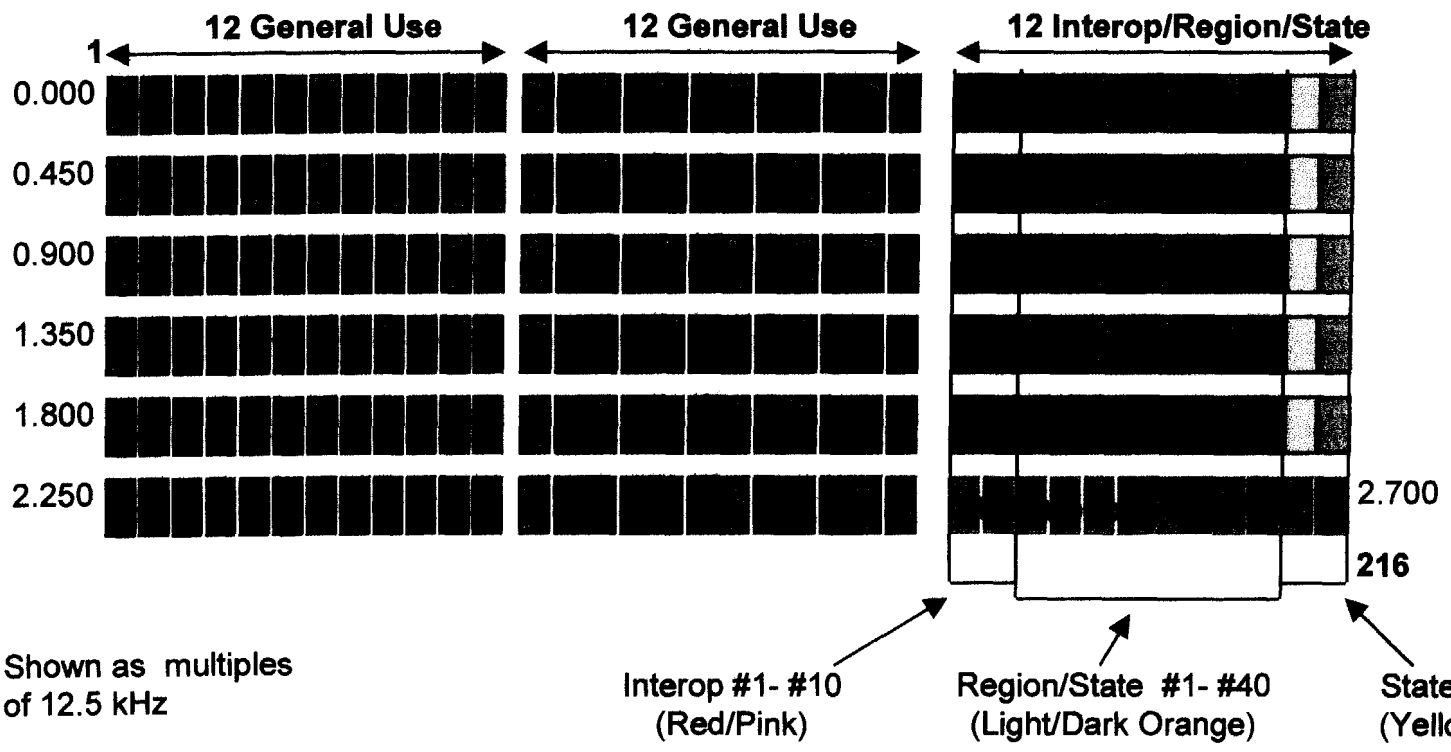

144 General Use
and
40 Region/State
and
10 State
and
12 Simplex (6 x 2)
or
6 Duplex
Vehicular Repeater
and
12 Simplex Tactical
(6 x 2)
and
10 Interoperability Coordination Channels

1 National Coordination
1 National EMS
1 National Fire
1 National Law Enforcement
1 National Pub. Safety/Service
5 Tactical

NPSTC 150 kHz Bandwidth Data Channels - Ch 63/68 and Reserve Block

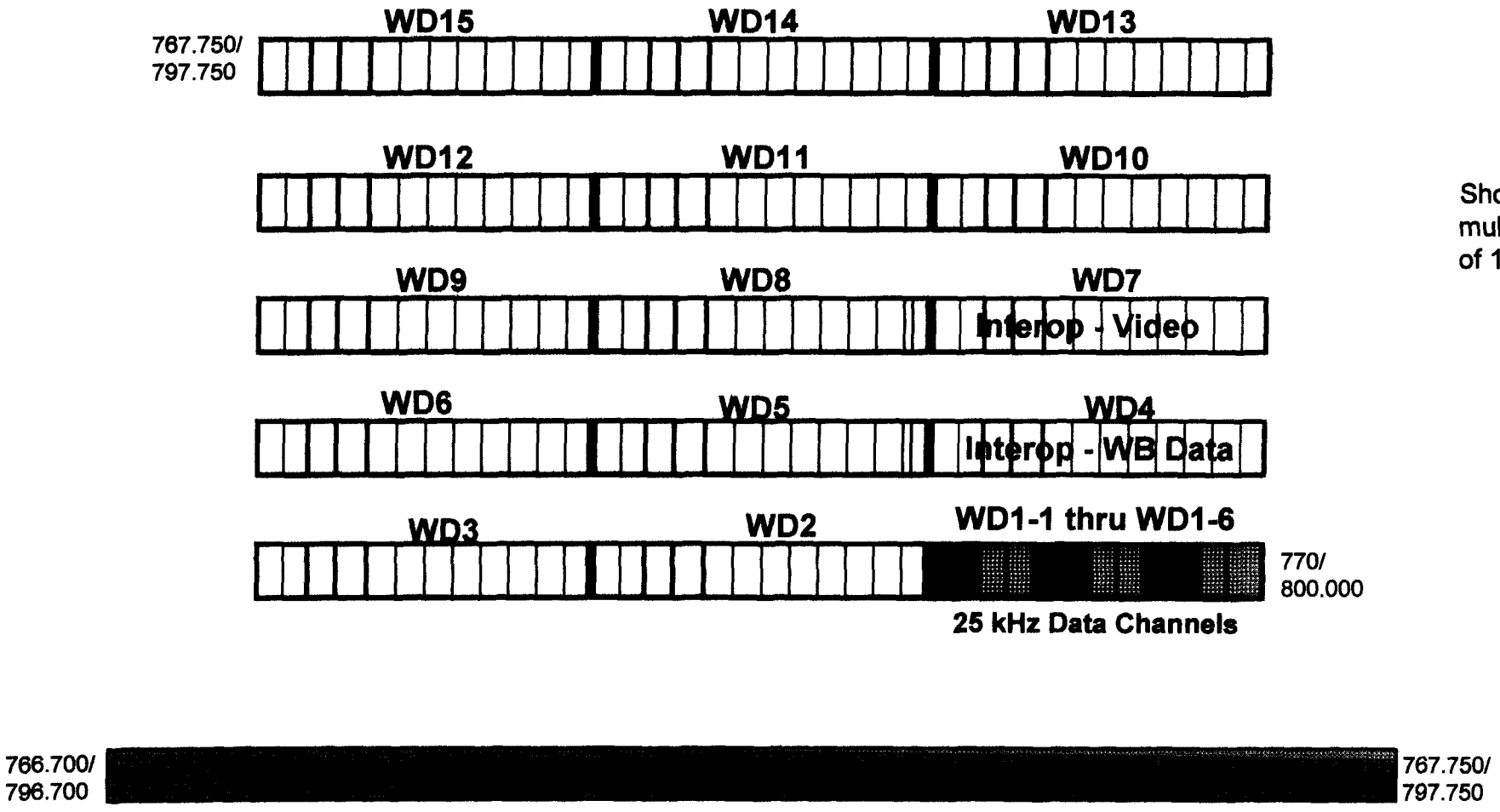

NPSTC 150 kHz Bandwidth Data Channels - Ch 64/69 and Reserve Block

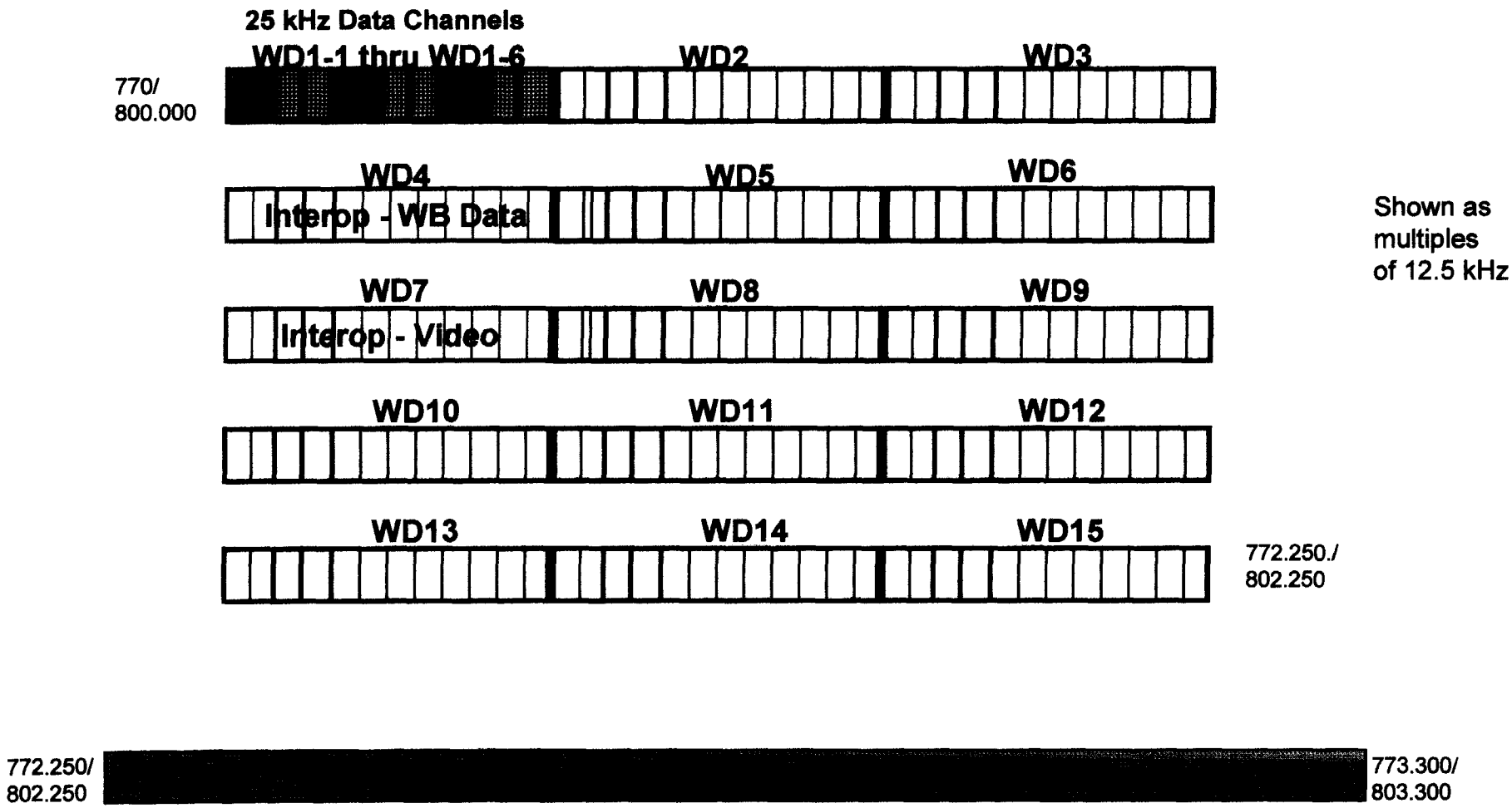

Usage Blocks in TV Ch 64/69
(773/803.300-776/806.000)

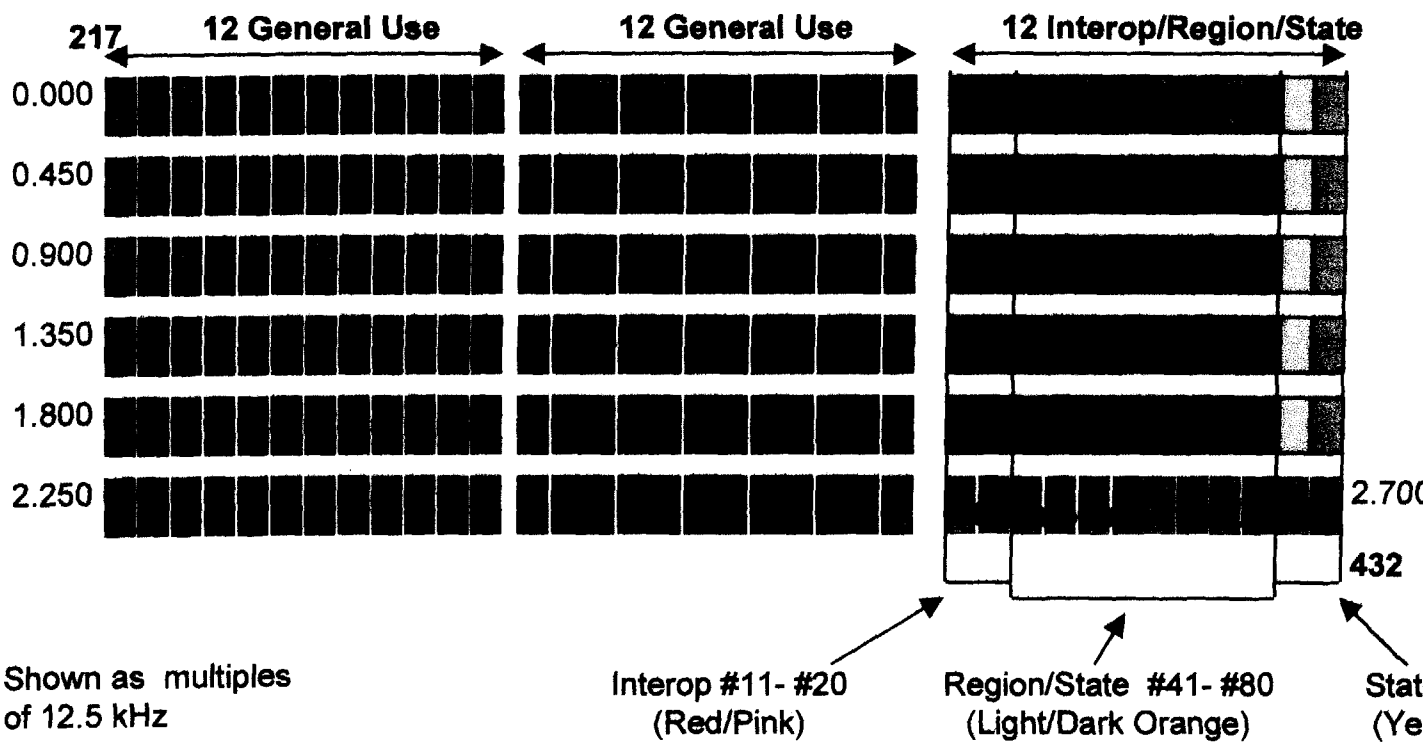

144 General Use
and
40 Region/State
and
10 State
and
12 Simplex (6 x 2)
or
6 Duplex
Vehicular Repeater
and
12 Simplex Tactical (6 x 2)
and
10 Interoperability Coordination Channels

1 National Coordination
1 National EMS
1 National Fire
1 National Law Enforcement
1 National Pub. Safety/Service
5 Tactical

On-Scene Direct Unit-to-Unit Adjacent Channel Interference Paths

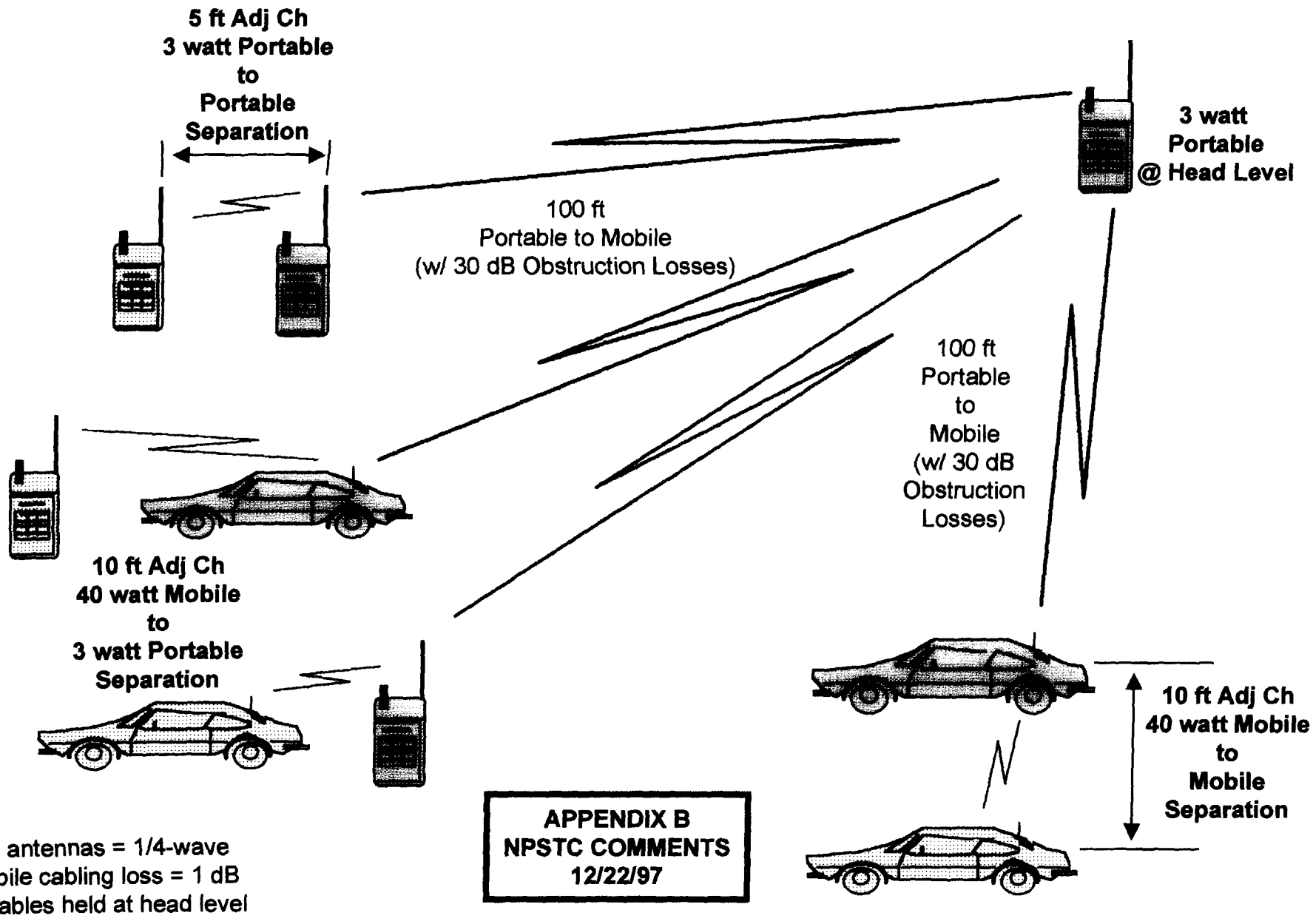

All antennas = 1/4-wave
Mobile cabling loss = 1 dB
Portables held at head level

APPENDIX B
NPSTC COMMENTS
12/22/97

On-Scene Interference

- Vehicular Repeater
  - Assume normal on-scene simplex communications occurs in mobile transmit band
  - Freq plan same as Fixed Repeater
    - mobile and portable receivers must cover entire band
    - adj ch on-scene mobiles and portables interfere with VRS receiver
    - VRS transmitter interferes with adj ch mobile and portable receivers (especially if adj ch is remote repeater)
  - Freq plan reverse of Fixed repeater
    - mobile and portable transmitters must cover entire band
    - mobile and portable receivers must cover entire band
    - VRS transmitter interferes with on-scene adj ch simplex communications
    - VRS receiver could be interfered with by nearby Fixed Repeater site

APPENDIX B
NPSTC COMMENTS
12/22/97

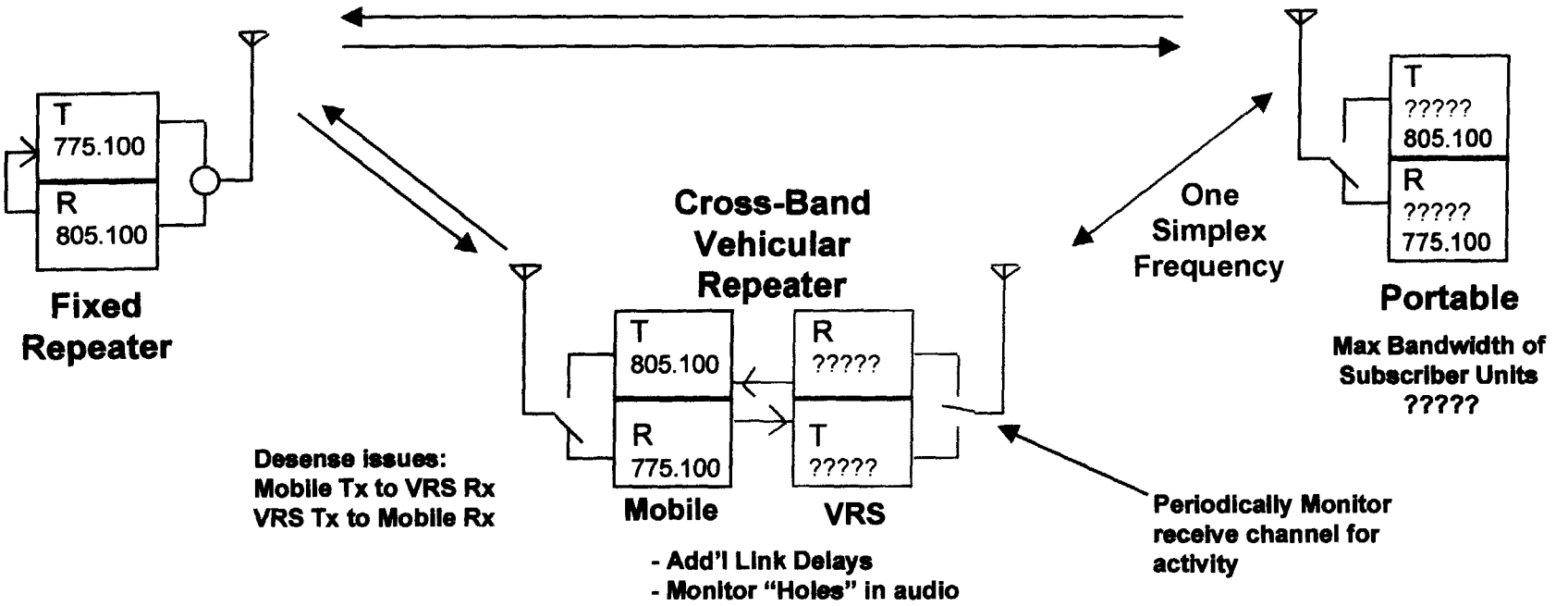

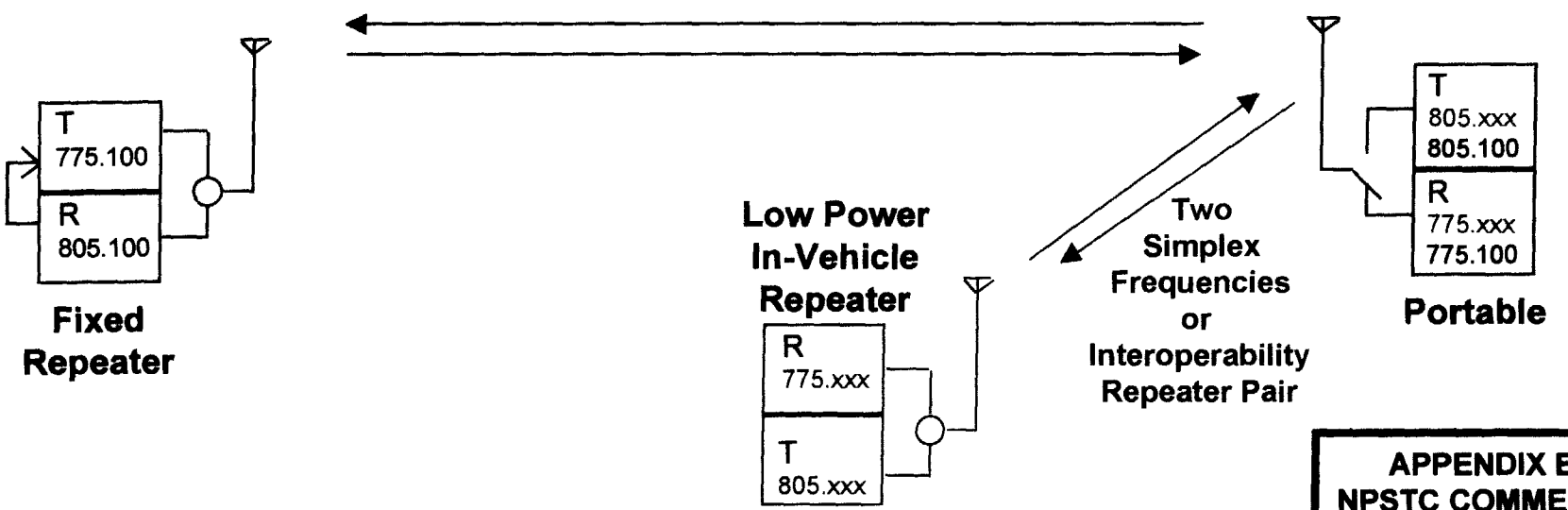

APPENDIX B
NPSTC COMMENTS
12/22/97

Possible Vehicular Repeater Operations

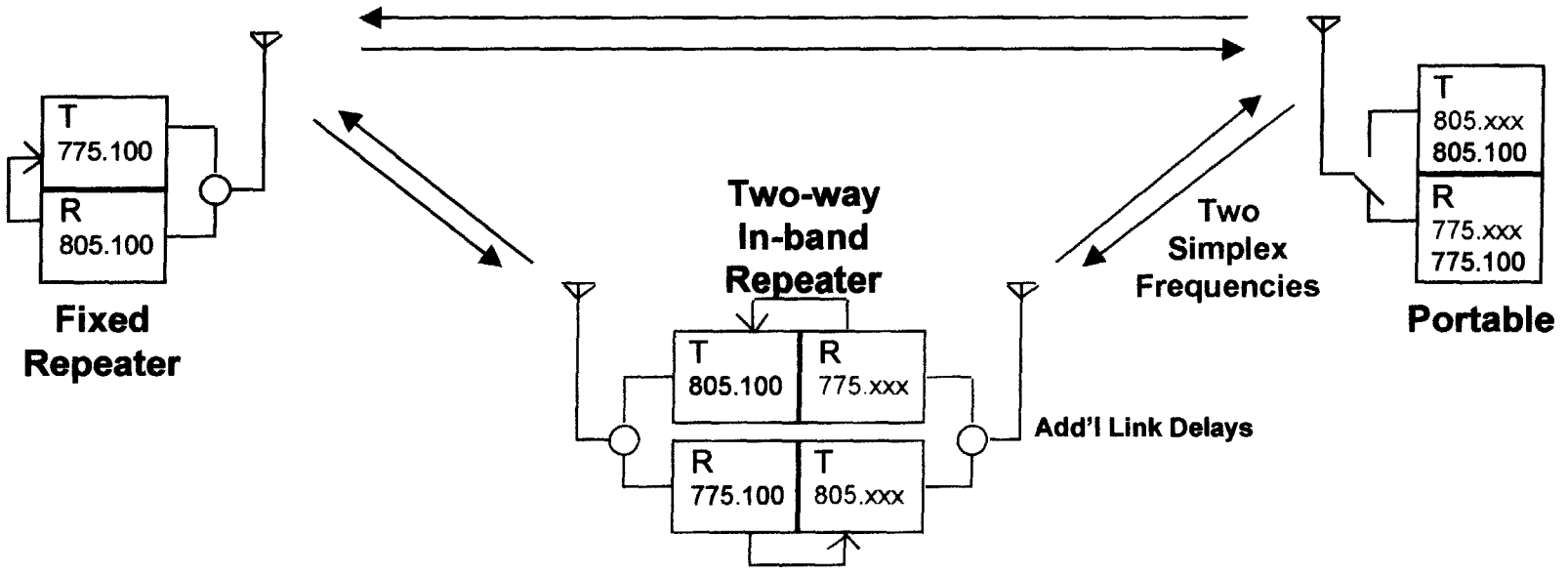

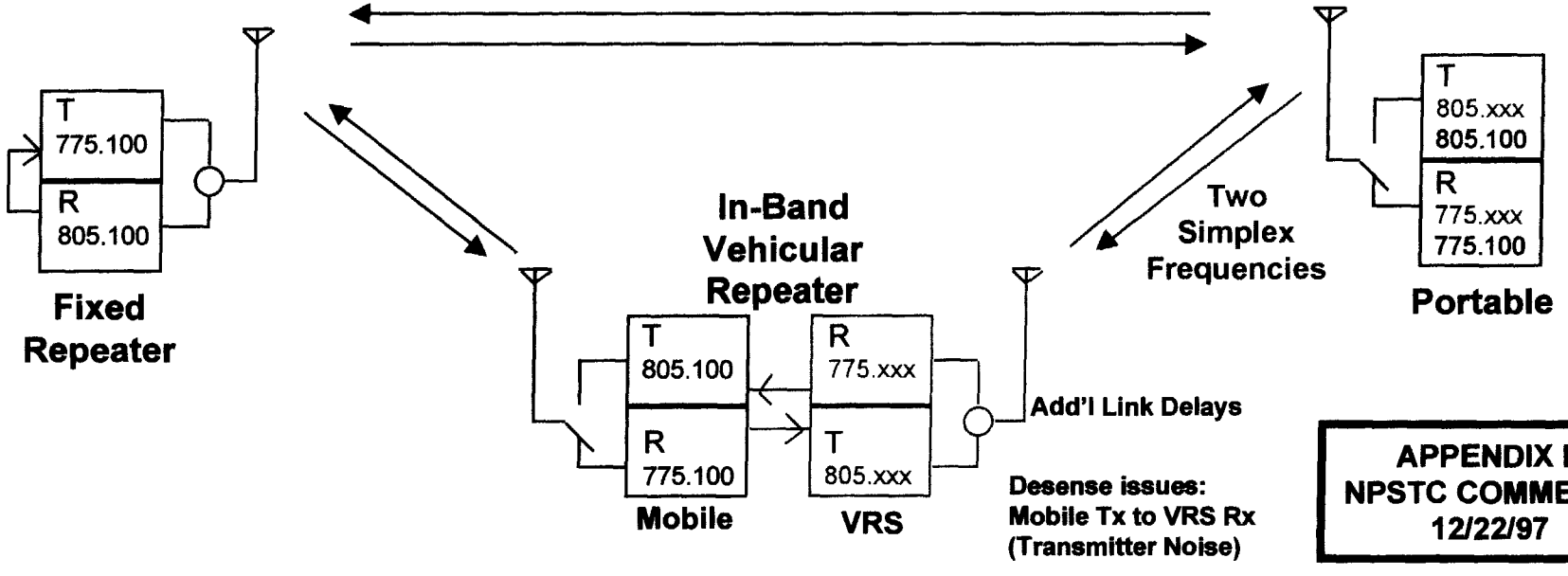

APPENDIX B
NPSTC COMMENTS
12/22/97