BellSouth's Proposed Implementation of Georgia Docket No. 7892_U

OPERATOR SERVICES AND DIRECTORY ASSISTANCE (OS, DA)

Function:	**Average Speed to Answer**
Measurement Overview:	The speed of answer delivered to CLEC retail customers, when BST provides Operator Services or Directory Services on behalf of the CLEC, must be substantially the same as the speed of answer that BST delivers to its own retail customers for equivalent local services.
Measurement Methodology:	**1. Average Speed to Answer (DA) =** **(# of Calls Answered Within 12 Seconds) / (Total DA Calls) X 100** **2. Mean Time to Answer** **3. Average Speed to Answer (OS) =** **(# of Calls Answered Within 2 and 10 Seconds) / (Total OS Calls) X 100** **4. Mean Time to Answer** **Objective:** Measures the percent and mean time a call is answered by an OS or DA operator in a predefined timeframe **Methodology:** • Reported in the aggregate • Not Carrier Specific

Reporting Dimensions:	**Excluded Situations:**
• Operator Services in Aggregate • Directory Assistance in Aggregate • Processing Method (human versus machine processes)	• Call abandoned by customers prior to answer by the BST OS or DA operator
Data Retained Relating to CLEC Experience:	**Data Retained Relating to BST Performance:**
• Month • Call Type (OS or DA) • Mean Speed of Answer • Standard Error for Mean Speed of Answer	• Month • Call Type (OS or DA) • Mean Speed of Answer • Standard Error for Mean Speed of Answer

Average Speed to Answer

	Average Mean Time to Answer	% Calls Answered within 12 seconds	% Calls Answered within 10 seconds
Directory Assistance	X	X	
Operator Services	X		X

BellSouth's Proposed Implementation of Georgia Docket No. 7892_U

E911

Function:	**Timeliness and Accuracy**
Business Implications:	• In the interest of public safety, it is BellSouth's goal to maintain 100% accuracy in the E911 database for both CLEC's customers and BST's retail customers and to have zero errors in processing orders for E911 database updates. • CLECs that purchase UNEs or provide local service as a facility-based provider are responsible for the accuracy of their data that is input in the E911 database. • As part of BSTs effort to maintain 100% accuracy of the E911 database, data verification parameters and requirements for all companies that submit E911 inputs will be reviewed and modified accordingly to ensure the highest integrity. • These measurements were developed to ensure parity between the processing and accuracy of E911 database orders for both the CLEC's customers and BST's retail customers.
Measurement Methodology:	**1. E911 Timeliness = ∑ (Number of Orders missed in Reporting Period) / (Number of Orders Confirmed in Reporting Period) X 100** **Ojective:** Measures the percentage of missed due dates of 911 database updates **Methodology:** Mechanized metric from ordering system **2. E911 Accuracy = ∑ |Total number of SOIRs with errors generated from Daily TN activity (based on the E911 Local Exchange Carrier Guide for Facility-Based Providers)| / (Total number of SOIR orders for E911 updates) X 100** **Objective:** Measures the percentage of accurate 911 database updates **Methodology:** Mechanized metric from ordering system

Reporting Dimensions:	**Excluded Situations:**
• CLECs in Aggregate • BST in Aggregate • See Appendix A, item 4	• Any order canceled by the CLEC will be excluded from this measurement. • Order Activities of BST associated with internal or administrative use of local services
Data Retained Relating to CLEC Experience:	**Data Retained Relating to BST Performance:**
• Report Month • CLEC Order Number • Order Submission Date • Order Submission Time • Error Type • Error Notice Date • Error Notice Time • Standard Order Activity • Geographic Scope	• Report Month • Error Type • Average number of error • Standard Order Activity • Geographic Scope

E911 Timeliness and Accuracy

	CLEC	BST
% E911 Orders Missed	X	X
% E911 Accurate Orders	X	X

BellSouth's Proposed Implementation of Georgia Docket No. 7892_U

Trunking (T)

Function:	Interconnection Trunking Performance
Measurement Overview:	In order to insure quality service to the CLECs as well as protecting the integrity of the BST network, BST collects traffic performance data on the trunk groups interconnected with the CLECs as well as all other trunk groups in the BST network.
Measurement Methodology:	**1. CLEC Trunk Group Service Report** - Contains the service performance results of final trunk groups between the CLEC switch and a BST tandem or end office. **2. BellSouth CTTG Blocking Report** - Contains the trunk blocking results of final trunk groups between the BST end office and BST access tandem. **3. Local Network Trunk Group Service Report** - Contains the service performance results of final trunk groups in the BST local service tier of the network. **4. BellSouth Local Network Blocking Report** - Contains the trunk blocking results of final trunk groups in the BST local service tier of the network. **Methodology:** The data are processed weekly through a mechanized system which calculates the percentage blocking during the time-consistant busy hour (TCBH). The TCBH is defined as the identical hour each day during which, over a number of days, the highest average traffic is measured.

Reporting Dimensions:	**Excluded Situations:**
• BST trunk groups • CLEC trunk groups	• N/A
Data Retained Relating to CLEC Experience:	**Data Retained Relating to BST Performance:**
• N/A	• N/A

CLEC Trunk Group Service Report

CLEC TRUNK GROUP SERVICE REPORT
MONTHLY SUMMARY

BST ORDERED	AL	GA	KY	LA	MS	NC	NF	SC	SF	TN	TOTAL	TOTAL w/o GA
Total Trunk Groups:	x	x	x	x	x	x	x	x	x	x	x	x
Trk Grps Meas/Proc:	x	x	x	x	x	x	x	x	x	x	x	x
Tot Grps > 3% NC this report	x	x	x	x	x	x	x	x	x	x	x	x
PCT1	x	x	x	x	x	x	x	x	x	x	x	x

CLEC ORDERED	AL	GA	KY	LA	MS	NC	NF	SC	SF	TN	TOTAL	TOTAL w/o GA
Total Trunk Groups:	x	x	x	x	x	x	x	x	x	x	x	x
Trk Grps Meas/Proc:	x	x	x	x	x	x	x	x	x	x	x	x
Tot Grps > 3% NC this report	x	x	x	x	x	x	x	x	x	x	x	x
PCT1	x	x	x	x	x	x	x	x	x	x	x	x

TOTAL	AL	GA	KY	LA	MS	NC	NF	SC	SF	TN	TOTAL	TOTAL w/o GA
Total Trunk Groups:	x	x	x	x	x	x	x	x	x	x	x	x
Trk Grps Meas/Proc:	x	x	x	x	x	x	x	x	x	x	x	x
Tot Grps > 3% NC this report	x	x	x	x	x	x	x	x	x	x	x	x
PCT1	x	x	x	x	x	x	x	x	x	x	x	x

BellSouth's Proposed Implementation of Georgia Docket No. 7892_U

BellSouth CTTG Blocking Report

BELLSOUTH CTTG BLOCKING REPORT - SUMMARY GROUPS EXCEEDING MBT PROCESS DATE										
TGSN	TANDEM	END OFFICE	DESCRPT	STUDY PERIOD	OBSVD BLKG	HR	TKS	VAL DAYS	NBR RPTS	RMKS
x	x	x	x	x	x	x	x	x	x	x

Local Network Trunk Group Service Report

LOCAL NETWORK TRUNK GROUP SERVICE REPORT MONTHLY SUMMARY												
	AL	GA	KY	LA	MS	NC	NF	SC	SF	TN	TOTAL	TOTAL w/o GA
Total Trunk Groups:	x	x	x	x	x	x	x	x	x	x	x	x
Trk Grps Meas/Proc:	x	x	x	x	x	x	x	x	x	x	x	x
Tot Grps > 3% NC this report	x	x	x	x	x	x	x	x	x	x	x	x
PCT1	x	x	x	x	x	x	x	x	x	x	x	x

BellSouth Local Network Blocking Report

BELLSOUTH LOCAL NETWORK BLOCKING REPORT - SUMMARY GROUPS EXCEEDING MBT PROCESS DATE										
A-END	Z-END	DESCRPT	TGSN	STUDY PERIOD	OBSVD BLKG	HR	TKS	VAL DAYS	NBR RPTS	RMKS
x	x	x	x	x	x	x	x	x	x	x

BellSouth's Proposed Implementation of Georgia Docket No. 7892_U

APPENDIX A

ITEM #	DESCRIPTION
1. Carrier Specific - Reported on a per order basis	• Interconnection Trunks - average response time, percent less than 10 days. • UNE - less than 10 lines / circuits and 10 lines / circuits of more, mechanized orders and non-mechanized orders. • UNE (Specials) - less than 10 lines / circuits and 10 lines / circuits of more, mechanized orders and non-mechanized orders. • Resale Residential & Business - less than 10 lines / circuits and 10 lines / circuits of more, mechanized orders and non-mechanized orders. • Resale (Specials) - less than 10 lines / circuits and 10 lines / circuits of more, mechanized orders and non-mechanized orders. • UNE (Unbundled Loops w/ interim telephone number portability) - less than 5 and 5 or more, mechanized orders and non-mechanized orders.
2. Reported by Carrier on a per order basis	UNE: by groups of lines on single order. Separately tracked for dispatch and non-dispatch as follows: • Local Interconnection Trunks • Resale (Residence): by groups of lines on single order similar to UNE (POTS) • Resale (Business) - by groups of lines on single order similar to UNE (POTS) • Resale (Specials) - by groups of lines on single order similar to UNE (POTS) • UNE (Unbundled Loops w/ interim telephone number portability)
3. Carrier Specific - Reported on a per order basis	• UNE - Dispatched, Not Dispatched, and misses where the competing carrier or end user causes the missed appointment. • Resale Residence & Business Dispatched, Not Dispatched - All misses, denoting misses, where the competing carrier or end user caused the missed appointment. • Interconnection Trunks • Resale Specials
4. Geographic Scope	• State and Regional level unless otherwise specified

CLEC OSS Access

EDI/API Ordering

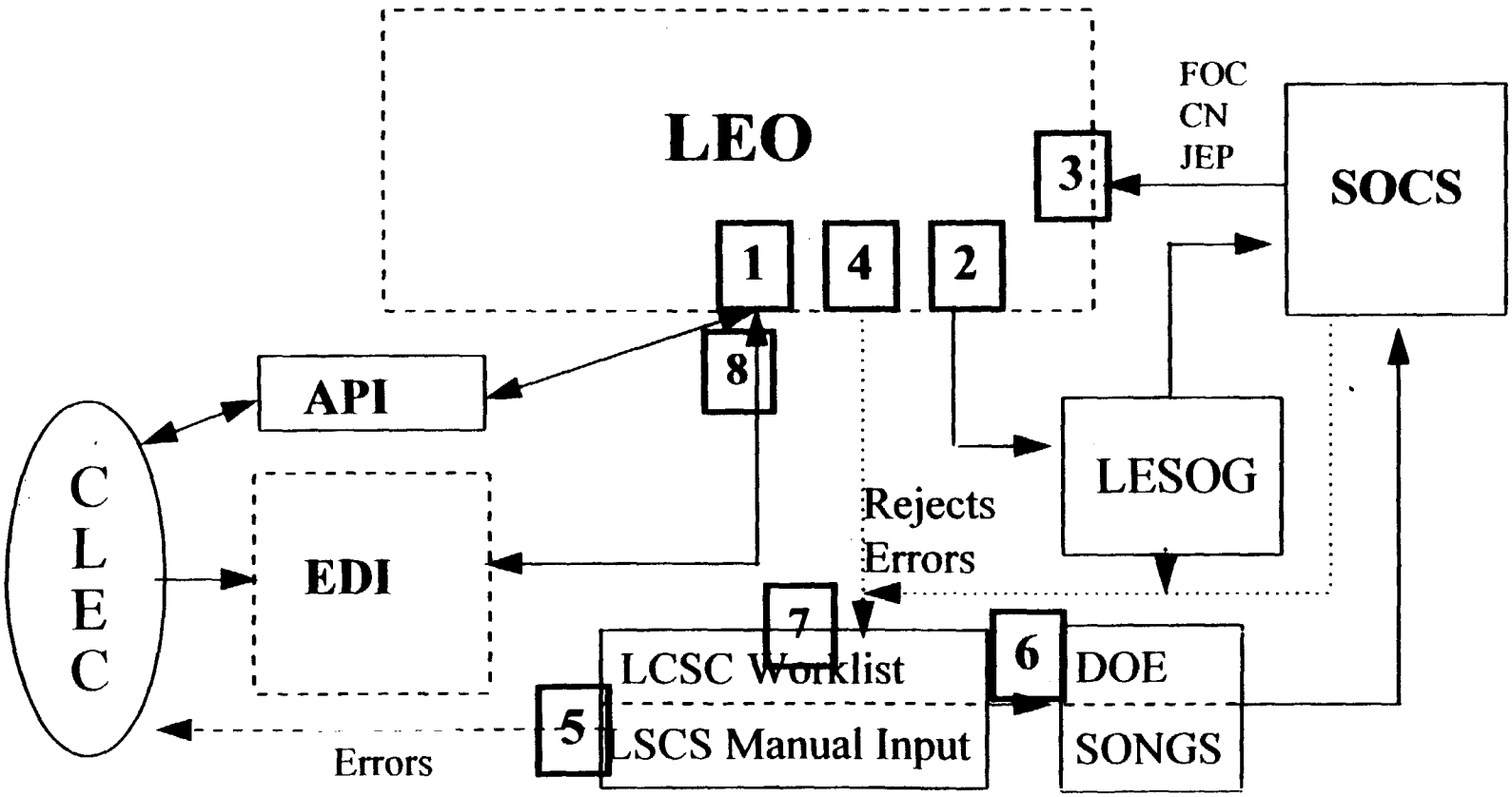

CLEC OSS Access

PRE-ORDERING

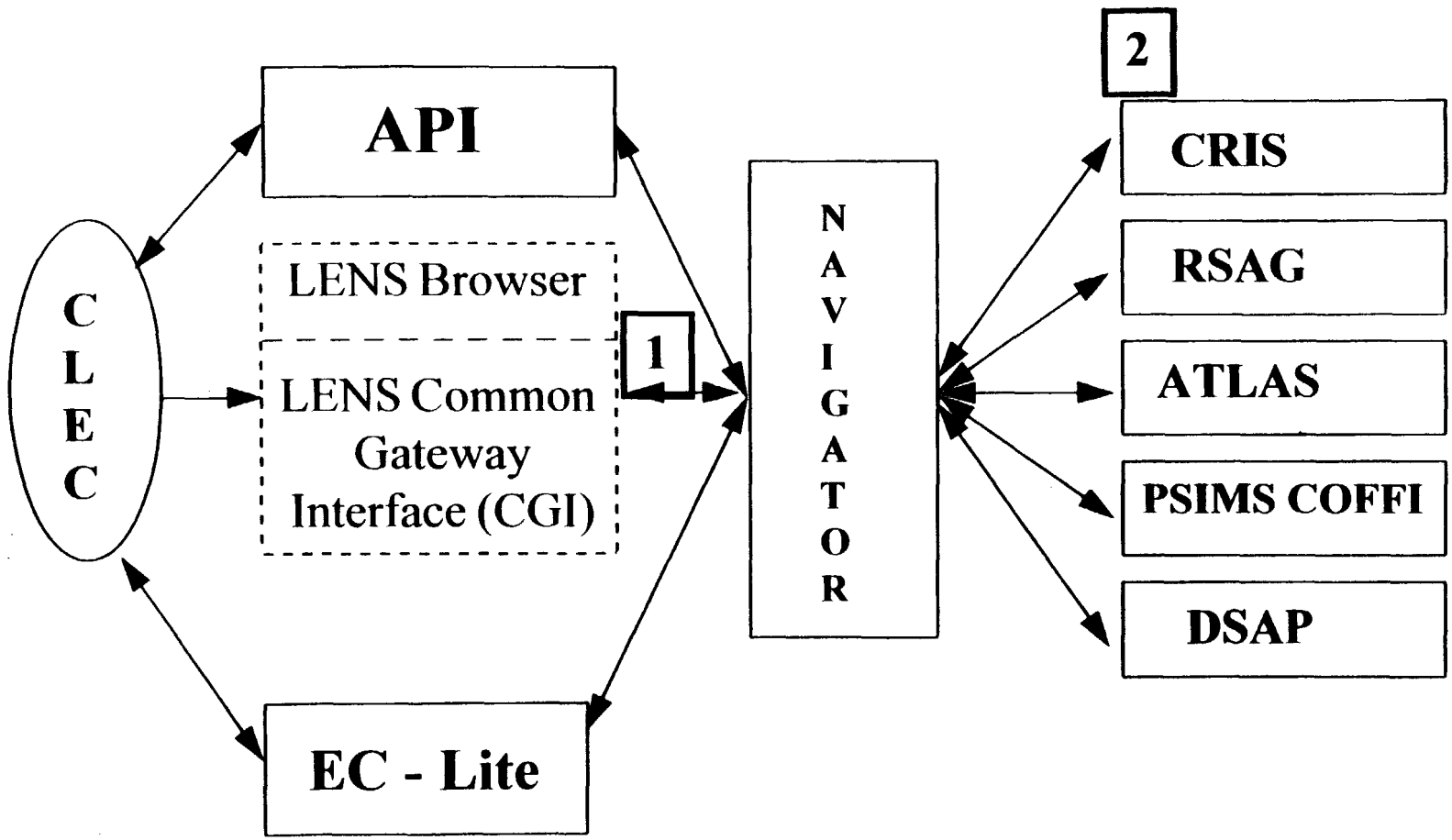

BELLSOUTH'S EVIDENCE OF COMPLIANCE WITH CHECKLIST ITEM 8: WHITE PAGES DIRECTORY LISTINGS

- BellSouth's state-approved agreements with resellers and facilities-based carriers include arrangements for the provision of White Pages listings for customers of CLECs.

- In each state where the relevant state commission has approved BellSouth's Statement of Generally Available Terms and Conditions ("Statement"), or allowed it to take effect, CLECs also can obtain listings for their subscribers under the terms of the Statement.

- In its agreements and Statement, BellSouth makes available the following items.

  - BellSouth provides subscriber primary listing information in the White Pages in standard format at no charge to the CLEC or its customer.

  - CLEC subscribers are not separately classified or otherwise identified as such.

  - Additional and optional listings are available at rates set out in BellSouth's General Subscriber Services Tariff. If these services are being resold, the state-established wholesale discount applies.

  - BellSouth updates customers' listings based on information submitted by CLECs in standard format.

  - BellSouth omits subscribers that the CLEC indicates are to be unlisted and accords the directory listings of CLEC subscribers the same confidentiality as listings of BellSouth's own subscribers.

  - BellSouth includes and maintains CLEC subscriber listings in BellSouth's directory assistance database free of charge.

  - BellSouth delivers copies of the White Pages to CLEC subscribers free of charge.

- BellSouth's methods and procedures for listing the subscribers of other local service providers have been in place since March of 1996. As of February, 1998 BellSouth had provided more than 209,500 listings for CLEC customers in its nine-state region. These include: 16,500 in Alabama; 62,000 in Georgia; 52,000 in Florida; 8000 in Kentucky; 16,000 in Louisiana; 4000 in North Carolina; 16,500 in Mississippi; 15,500 in South Carolina; and 19,000 in Tennessee.

- BellSouth is aware of one incident in which a CLEC subscriber listing was excluded from BellSouth's white page listings because it had mistakenly been excluded from the information downloaded into the BellSouth directory assistance database. That incident occurred in Georgia on or about May 21, 1997, and was corrected when the relevant

CLEC notified BellSouth of the problem. Four other errors have been reported in CLEC customers' white pages listings. Further investigation of these incidents revealed that in each case the error arose because the CLEC erred in placing its order (e.g., erroneously stating that a customer's number should be unpublished) or else missed the deadline for placing orders. Liability for any errors or omissions in a directory listing is governed by BellSouth's tariff.

- In order to protect the accuracy of the directory database, BellSouth requires CLECs to request that their customers be listed in BellSouth's directory after service is transferred from BellSouth to the CLEC. This notification requirement ensures that when a customer changes carriers the directory will accurately reflect any other changes (such as a change of address) that would affect his or her directory listing.

- Where any local service provider — whether a CLEC or an independent telco— expressly informs BellSouth not to provide its customers listings to other local service providers, BellSouth honors that request. Unless a local service provider has expressly informed BellSouth not to provide its listings, however, BellSouth makes the listings of that local service provider available to CLECs.

- Although it is not required to do so under the checklist or any other provision of the Act, BellSouth includes listings of CLECs' business subscribers in the appropriate Yellow Pages or classified directory.

BELLSOUTH'S EVIDENCE OF COMPLIANCE WITH CHECKLIST ITEM 9: ACCESS TO TELEPHONE NUMBERS

- BellSouth's state-approved agreements obligate BellSouth to provide nondiscriminatory access to number resources.

- In each state where the relevant state commission has approved BellSouth's Statement of Generally Available Terms and Conditions ("Statement"), or allowed it to take effect, CLECs also can obtain number resources via the Statement.

- As the Central Office Code Administrator for its territory, BellSouth has established procedures to provide nondiscriminatory NPA/NXX code assignments to CLECs in accordance with the code administration guidelines published by the Industry Numbering Council, a national industry body.

- BellSouth does not place any restrictions on how a CLEC uses an NPA/NXX code. Any number conservation requirements would apply equally to CLECs and BellSouth.

- As of January 5, 1998, BellSouth had assigned a total of 962 NPA/NXX codes for CLECs. BellSouth is not aware of ever having refused a CLEC request for an NPA/NXX code assignment.

- In 1997 BellSouth became aware of a very few instances where an NPA/NXX code assigned to a CLEC was not activated as scheduled in all affected BellSouth switches. To remedy the problem, in mid-1997 BellSouth modified its testing procedures for new NPA/NXX codes. BellSouth has since assigned scores of NPA/NXX codes without any recurrence of the problem.

- When BellSouth is no longer the Code Administrator, BellSouth will continue to offer services to assist CLECs in obtaining NPA/NXX codes.

BELLSOUTH'S EVIDENCE OF COMPLIANCE WITH CHECKLIST ITEM 10: SIGNALING AND CALL-RELATED DATABASES

- BellSouth's state-approved agreements provide for non-discriminatory access to BellSouth's signaling networks and call-related databases used for call routing and completion.

- In each state where the relevant state commission has approved BellSouth's Statement of Generally Available Terms and Conditions ("Statement"), or allowed it to take effect, CLECs also can obtain access to BellSouth's signaling networks and call-related databases via the Statement.

- Signaling. CLECs in the State of _____ and throughout BellSouth's region have access to BellSouth's signaling systems.

  - Signaling Links are dedicated transmission paths carrying signaling messages between switches and signaling networks. Signaling Link Transport is a set of two or four dedicated 56 kbps transmission paths between CLEC-designated Signaling Points of Interconnection and a BellSouth Signal Transfer Point ("STP") site. BellSouth offers 56 kbps connections between a switch or Service Switching Point and a home STP, or between STPs in different company networks (for example, between two STP pairs for two CLECs).

  - Signal Transfer Points are signaling message switches that interconnect Signaling Links to route signaling messages between switches and databases. CLECs may use BellSouth's Signaling System 7 ("SS7") signaling network for signaling between their switches, between their switches and BellSouth's switches, and between their switches and the networks of other parties connected to the BellSouth SS7 network. STPs also provide access to other network elements connected to the BellSouth SS7 network including: 1) BellSouth-provided local switching or tandem switching; 2) BellSouth-provided Service Control Points/databases; 3) third-party provided local switching or tandem switching; and 4) third-party provided Service Control Points/databases.

  - As of January 1, 1998, sixteen facilities-based CLECs had interconnected through an interexchange carrier connected to BellSouth or by using a third-party signaling hub provider which in turn accesses BellSouth's signaling network. Additional facilities-based CLECs may obtain access to the database as described in BellSouth's tariff (FCC #1). Assuming the appropriate signaling links are in place, direct access to the database can be provided as determined through negotiations. Because BellSouth's switch or Signal Transfer Point does not distinguish between BellSouth's end users and the end users of resellers, BellSouth does not know how many queries have been made to BellSouth's databases from the end-user customers of resellers.

- The Signaling Link between the CLEC's switch and BellSouth's STP is a complex unbundled network element that CLECs can order by contacting their assigned account team representative at BellSouth. The representative then arranges the set-up for the CLEC.

- Databases. Service Control Points ("SCPs") are databases containing customer and/or carrier-specific routing, billing, or service instructions. These SCPs are the network elements that provide the functionality for storage of, access to, and manipulation of information required to offer a particular service and/or capability. CLECs can access SCPs remotely, by dialing-up BellSouth's Advanced Intelligent Network ("AIN") Service Management System. BellSouth's databases include:

  - Line Information Data Base ("LIDB"). LIDB is a transaction-oriented database accessible through the SS7 network that contains records associated with subscriber line numbers and special billing numbers. LIDB accepts and responds to queries from other BellSouth network elements or a CLEC's alternative network.

    - From January through December, 1997, CLECs and other service providers across BellSouth's nine-state region completed approximately 448 million queries to BellSouth's LIDB database. Access to the database was through a third party "signaling hub" provider that was directly connected to BellSouth's signaling network or through an interexchange carrier that was directly connected to BellSouth's signaling network. LIDB queries are billed to the third party "signaling hub" provider or interxchange carrier, not the CLEC. Accordingly, of the 448 million queries completed, BellSouth cannot separate out the number completed by facilities-based CLECs. Facilities-based CLECs can, however, obtain direct access to the database as described in BellSouth's tariff (FCC #1). Assuming the appropriate signaling links are in place, direct access to the database can be provided as determined through negotiations.

  - Toll Free Number Database. The toll free number database provides functionality necessary for toll free (for example, 800 and 888) number services.

    - From January through November, 1997, CLECs and other service providers across BellSouth's nine-state region completed approximately 65 million queries to BellSouth's Toll Free Number database. Facilities-based CLECs alone completed 1.6 million queries. Additional facilities-based CLECs may obtain access to

the database as described in BellSouth's tariff (FCC #1). Assuming the appropriate signaling links are in place, direct access to the database can be provided as determined through negotiations.

- Automatic Location Identification/Data Management System ("ALI/DMS"). The ALI/DMS database contains subscriber information used for determining to which Public Safety Answering Point ("PSAP") an emergency call should be routed.

- Advanced Intelligent Network. AIN is a vendor-independent network architecture deployed by BellSouth that provides capabilities for creation of custom telecommunications services that are invoked by SS7 messages (called switch "triggers") from a switch to an SCP. AIN access provides CLECs the ability to create service applications utilizing BellSouth AIN and deploy those applications via the BellSouth Service Management System ("SMS") to BellSouth's SCPs. A CLEC that wishes to access BellSouth's AIN for the first time can do so in a matter of seven days provided that the CLEC has the appropriate customer premises facilities installed, i.e., ISDN and PC software.

  - BellSouth has tested its AIN Toolkit 1.0, which provides a CLEC with the ability to create and offer AIN-service applications to their end users, as well as its AIN SMS Access 1.0, which provides a CLEC with access to the BellSouth-provided service creation environment. The completion of test calls and the generation of billing records were part of the testing process. The testing confirmed that service orders flowed through BellSouth's systems properly and that accurate bills were rendered.

  - BellSouth has made presentations to several CLECs interested in using AIN Toolkit 1.0 to develop AIN applications that would run via BellSouth's AIN, and thus on BellSouth's switches. No CLEC is currently using AIN Toolkit in this manner. Also, no CLEC has yet requested the ability to use AIN Toolkit 1.0 to develop AIN applications that would run via BellSouth's AIN in conjunction with the CLEC's own switches.

- Selective routing (also called "customized" routing). The selective routing capability, as offered using line class codes, is subject to the decisions of state commissions and the availability of these codes in each central office switch and is offered on a first-come, first-served basis. A technical trial

of selective routing using BellSouth's AIN platform commenced in Georgia during January, 1998.

- BellSouth provides access to the SMS associated with each of the databases described above in accordance with 47 C.F.R. §51.319(e)(3). Requesting carriers are provided with the information necessary to format data and enter it into the various databases using the associated SMS. BellSouth also provides interested CLECs with technical service descriptions for each of the above items.

- BellSouth allows access between the CLEC's SCP and BellSouth's signaling network. Appropriate mediation devices will be used as required and as ordered by state commissions to safeguard network security.

- All data in the above databases are maintained in accordance with §222 of the Act.

- While MCI has argued that BellSouth does not provide CLECs with the use of BellSouth's SS7 network in conjunction with the service called Automatic Call Return, Automatic Call Return does not use or require SS7 functionality.

- BellSouth's cost-based prices for databases have been submitted to or approved by the relevant state commission.

BELLSOUTH'S EVIDENCE OF COMPLIANCE WITH CHECKLIST ITEM 12: LOCAL DIALING PARITY

- CLEC customers do not have to dial any greater number of digits than BellSouth customers to complete the same call. Although the CLEC's switch determines how the CLEC's end users dial specific calls, BellSouth interconnects with CLECs such that identical 7- and 10-digit local dialing for CLEC customers and BellSouth customers is ensured.

- BellSouth's state-approved agreements with carriers including AT&T and MCI provide for local dialing parity.

- In each state where the relevant state commission has approved BellSouth's Statement of Generally Available Terms and Conditions ("Statement"), or allowed it to take effect, CLECs also are entitled to local dialing parity via the Statement.