1.0 INTRODUCTION

1.1 Purpose of This Document

This document identifies potential technical service interconnection arrangements and dialing plans that could be used by providers of services using 555 line numbers.[1] This document complements the existing 555 NXX Assignment Guidelines, (INC94-0429-002 Rev. 1). For each potential technical service interconnection arrangement, the elements required to provide services using 555 line numbers are described. The need for transferring end-user billing and dialing information to the designated carrier or the service provider is detailed to the extent possible for each potential technical service interconnection arrangement. Several basic national uniform technical service interconnection arrangements will allow both access providers and information providers to plan more effectively the ubiquitous deployment of services. Any such changes, including modifications or additions to the document, will be made under the direction of the ICCF (Industry Carriers Compatibility Forum).

The technical service interconnection arrangements described in the document should be considered the product of industry consensus. The decision whether to implement any of these arrangements, and when any such arrangements may be deployed, is likely to be based on business opportunities and regulatory factors and may vary accordingly. Moreover, nothing in this document precludes the use of alternative arrangements which may include some or none of the features described.

1.2 Background

Previously, the use of "555" numbers and the network arrangement used to route and complete "555" calls have been associated primarily with the support of DA (Directory Assistance) services. The assignment guidelines for 555 line numbers (INC 94-0429-002 Rev 1.) allow these numbering resources to be used not only for DA services, but for a broad range of other services. The service arrangements described in this document are intended to support both DA and other services.

2.0 TECHNICAL SERVICE INTERCONNECTION REQUIREMENTS

Several network technical requirements must be satisfied in order to complete calls dialed with "555" numbers. These requirements reflect the need to:

a) accommodate a given dialing arrangement,
b) appropriately translate the dialed number,
c) route the call to the access customer or service provider,

[1] It is understood that access to existing 555 directory assistance functionality must be maintained.

d) provide that customer or provider the necessary call-related information to support the desired service,
e) record the necessary call detail,
f) ultimately bill the call and
g) provide blocking if appropriate

2.1 Dialing Arrangements

The "555" numbers may be dialed using either 7 or 10 digits depending on service arrangements and the local dialing plan.[2] "555" numbers assigned on a national basis could be dialed using only 7 digits from any location in an NPA (Numbering Plan Area) in which appropriate technical service interconnection arrangements have been ordered and deployed. Any national or non-national number could be dialed using 7 digits, if dialed from within the NPA(s) in which it is activated. If a national or non-national 555 number is dialed from outside the area code in which it is activated, it will be necessary to dial 10 digits. Accordingly, access networks should be able to accommodate 10 digit dialed 555 as well as 7 digit dialed 555 numbers, if either 7 digit dialing of 555 national numbers or 7 digit dialing of non-national numbers within the home NPA is permitted.[3]

2.2 Digit Analysis and Translation

The term digit analysis and the term translation are frequently used in this document. Although these terms are common within the telecommunications industry, they are often subject to somewhat differing interpretation and meaning. Within the description of 555 technical interconnection arrangements, digit analysis is intended to imply the examination of part of the digit string (typically 3 or 6 digits) in order to identify the type of call and any subsequent activity which must be performed. Translation is considered to be that action necessary to route the call, and could include the literal translation of a dialed number to a different (routable) number, or simply the selection of a route based on the dialed number.

For example, in 800 access, an end office performs a 3 digit analysis to identify the call as 800, and then typically launches a query to an external database where a 10 digit translation of the dialed 800 number provides a 10 digit routable number or a CIC (Carrier Identification Code) (or both), which is used to route the call. If the dialed 800 number is forwarded to the 800 service provider, an additional translation in that provider's network is necessary for call completion.

---

[2] Local dialing plans may impact the feasibility of using seven digits to dial 555 numbers.

[3] It is recognized that there may be local networks which are unable or unwilling to perform the translations necessary to route a call dialed with a 555 number. In such cases, these networks may elect to pass the call to another network.

The analogy to the 555 environment is clear. A 3 or 6 digit analysis of the dialed number is necessary to recognize the "555" call. Subsequent call processing will likely include a 7 or 10 digit translation for proper call routing.

2.3 Translations

A 7 or 10 digit analysis of the dialed number is performed in order to determine the carrier or 555 assignee to which the call should be routed. After this analysis is performed, the dialed number is translated to a routable number or to a carrier identification code designated for a particular 555 number via a CIC. The network in which this translation is performed affects the technical service connection arrangement. There are three categories of networks where translations could be performed: originating, terminating and intermediate. Originating network translation(s) are those that occur in the network from which the call originates. Terminating network translation(s) are those that occur in the network in which the call is completed to the location designated by the 555 number assignee. Intermediate network translation(s) are those that occur in a network in the call path that is neither the originating nor terminating network.

2.3.1 Originating Network Translation

If the translation is to be performed in the originating service provider's network, the capability to perform this function could be resident in each end office, or it could be provided at a point of concentration, either an access tandem or operator tandem switch. In addition, the translation could be realized through data stored in an external database and obtained via a database query from appropriately equipped (SSP [Service Switching Point]) switches.

2.3.2 Terminating Network Translation

If the translation is to be performed in the terminating network, the translation would most likely be provided at one point of concentration as described in the LERG (Local Exchange Routing Guide), either an access tandem or operator tandem switch. This capability would find application when a "555" call is routed by the originating service provider to the PIC (Presubscribed Interexchange Carrier). If the point of concentration processes terminating traffic to multiple NPA's, it would require that the full ten digit 555 number be forwarded to the terminating network by any intermediate transport provider. The terminating network would then provide the necessary translation and complete the call to the location designated by the 555 number assignee.

2.3.3 Intermediate Network Translations

The translation could also be performed in an intermediate network when the originating network routes the call to the intermediate network based upon the PIC of the calling line. This arrangement would require that the full ten digit 555 number be dialed and that the full 10 digit number be delivered to the intermediate network.

In another case, where an activated seven digit number is dialed, a routing analysis and translation would be required in the originating network to determine and route the call to the carrier designated for a particular 555 number. In this case, another analysis and translation would be required in the intermediate network to determine the routable number.

2.4 Routing

In the access network, a 555 call is routed to a location designated by the 555 number assignee such as:

- the point of presence (POP) of a specific interexchange carrier;
- the POP of the carrier presubscribed to the calling line (the "PIC")[4]
- a termination within the local network.

When multiple exchange providers exist in local calling areas, the call could be routed to an interconnection point of another local service provider by mutual agreement of the affected parties.

The network capability described above can support the routing of calls dialed with "555" numbers as both an exchange access service as well as a local exchange service.

2.5 Signaling Arrangements

Signaling could be provided in the form of Multi-Frequency (MF) and/or Signaling System 7 (SS7). These Signaling types can be utilized for the following applications; exchange service, operator services, access services, etc. (See Section 3 and Figure 3-1). Potential features and interface options for the signaling interfaces are summarized in Section 3.3, Table 1. Calls routed to either an interexchange carrier or to a carrier designated by the 555 number assignee may require that the originating

[4] This alternative applies to 10 digit dialed 555 numbers.

network provide information needed for billing and routing to the intermediate carrier who will then provide the same information to the terminating network.[5]

3.0 TECHNICAL SERVICE INTERCONNECTION ARCHITECTURES

This section describes access and exchange service architectures that could be used for 555 services. The service arrangements are categorized based upon the following network functions:

1. translations of the dialed number
2. the routing of the call
3. the type of signaling

These functions and their relationships are illustrated in Figure 3-1. The translation, routing, billing, blocking, and signaling characteristics are summarized in Section 3.3, Table 1.

3.1 Translations, Routing and Signaling Examples

Using Figure 3-1 as a reference, consider a local service example in which a customer dials a seven digit 555 number. The originating network could perform a seven digit analysis and translation of the 555 number and determines that the call should be completed within the same originating network. (See S1, S2 or S3 in Figure 3-1) The call would be delivered to the location of the 555 number holder on an intraLATA basis to a line side termination. (See S2 in Figure 3-1)

In the intermediate example, two potential situations could exist. In the first case, a caller dials a 10 digit 555 number with an NPA in a foreign LATA (Local Access Transport Area). The originating switch could route the call to the interexchange carrier identified by the PIC of the originating subscriber's line using a FG D (Feature Group D) interface (S-1). The PIC'd interexchange carrier could then analyze and translate the 555 number and route the call appropriately.

In the second case, a caller could dial either a 7 or 10 digit 555 number. The originating switch could perform digit analysis and translations of the 555 line number to determine the designated carrier (S1 in Figure 3-1) selected by the 555 assignee and route the call to that designated carrier. The designated carrier could then perform digit analysis and translate the 555 number and route the call appropriately.

[5] Information that the terminating network may need includes the Trunk Class Mark, or ANI II digits, the ANI or billing number, the called number or destination number and the transport carrier or presubscribed carrier information.

In a terminating example, a caller dials a 10 digit 555 number that is intended for a foreign NPA. The originating switch could route the call to the interexchange carrier identified by the PIC of the subscriber's line (S1 in Figure 3-1) using FG D interface. Thus far, this example is originating translation. Based upon the 10 digit dialed number, the interexchange carrier could terminate the call to the LEC (Local Exchange Carrier) tandem specified in the LERG. (This is the terminating network in Figure 3-1). The terminating LEC tandem could translate the seven digit 555 line number to a number in the terminating LATA to an exchange trunk interface (S2). Thus, translations would have been performed in the terminating LATA.

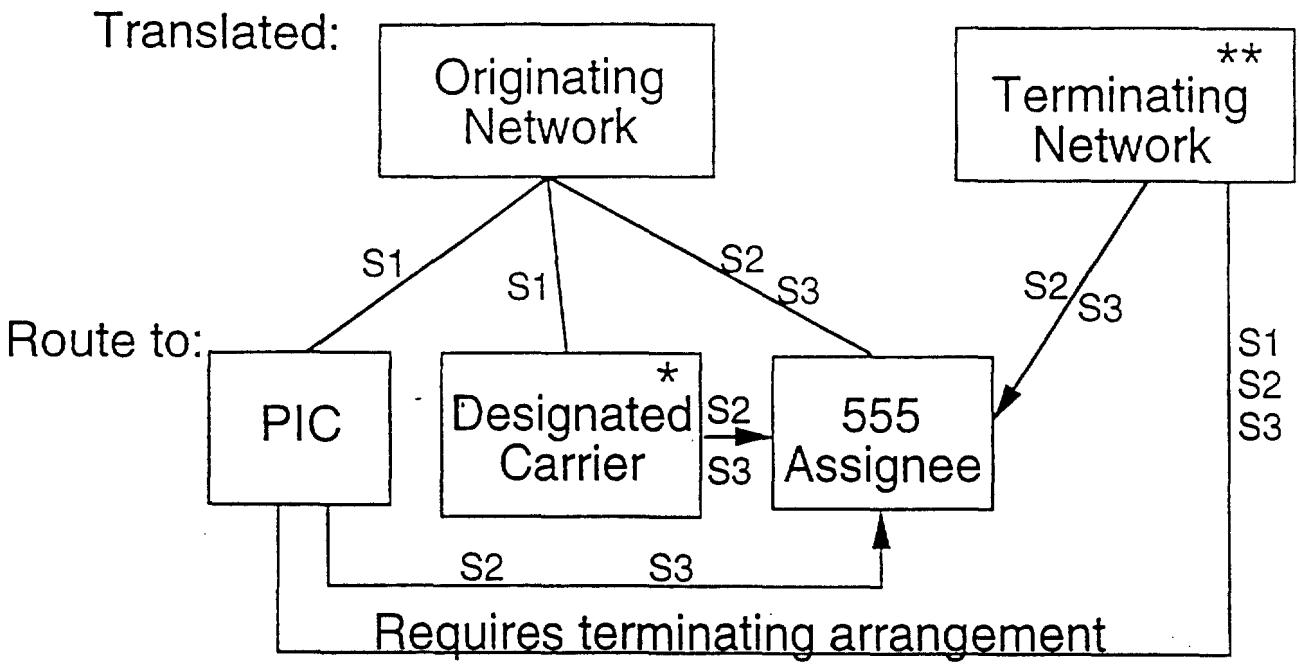

S1 = e.g. Feature Group D, Operator Services Switch

S2 = e.g. Line or trunk side interface

S3 = negotiated signaling and interface

* Designated carrier could be a 555 assignee

** 555 assignee could be a common carrier

Figure 3-1

3.2 Potential Architectural Arrangements

The translations, routing and signaling variations from Figure 3-1 are further illustrated in Figure 3-2. The left side of Figure 3-2 illustrates calls originated and terminated in the same LATA. The right side illustrates terminating calls from an interexchange carrier that were originated in another LATA.

Reference is made to a database in Figure 3-2 to perform the necessary screening and translations on the 555 line number to determine the proper carrier or 555 assignee interface. The use of a database and its location is the decision of the individual network provider(s).

References are also made to 555 calls from wireless stations via a MTSO (Mobile Telephone Switching Office). However, such 555 technical interconnection arrangements are not detailed in this document.

The signaling interfaces between switching entities in Figure 3-2 indicate options that are labeled as follows:

Originating			Terminating		
From	To	Signaling	From	To	Signaling
MTSO*	EO	Type 1 or 2B	IC	AT/OS	D (Terminating)
MTSO*	LT/AT/OS	Type2A/Type2D	AT/OS	SP	ET
MTSO	IC	D, O, DC (Subject (to negotiation)	EO	SP	EL
AT/OS	IC or SP	D, O	EO	SP	ET
EO	IC or SP	D, O	IC	SP	DC (subject to negotiation)
EO	SP	EL			
EO	SP	ET			

Options
Dialing: 7 or 10 digit
Translations: originating or terminating
Routing: PIC, designated carrier or service provider
Signaling Interface: FG D, OSS, Type1,2A,2B, 2D or Exchange

Abbreviations

D = Feature Group D
O = Operator Services Signaling
EL = Exchange Line Side
ET = Exchange Trunk Side
LT = Local Tandem
DC = Direct Connection
MTSO = Mobile Telephone Switching Office
AT = Access Tandem
EO = End Office
IC = Interexchange Carrier

* Not all of these interconnections support subscribers ANI. (See TR-NWT-000145 [Compatibility Information for Interconnection of a Wireless Serice Provider and the Local Exchange Network] for details.)

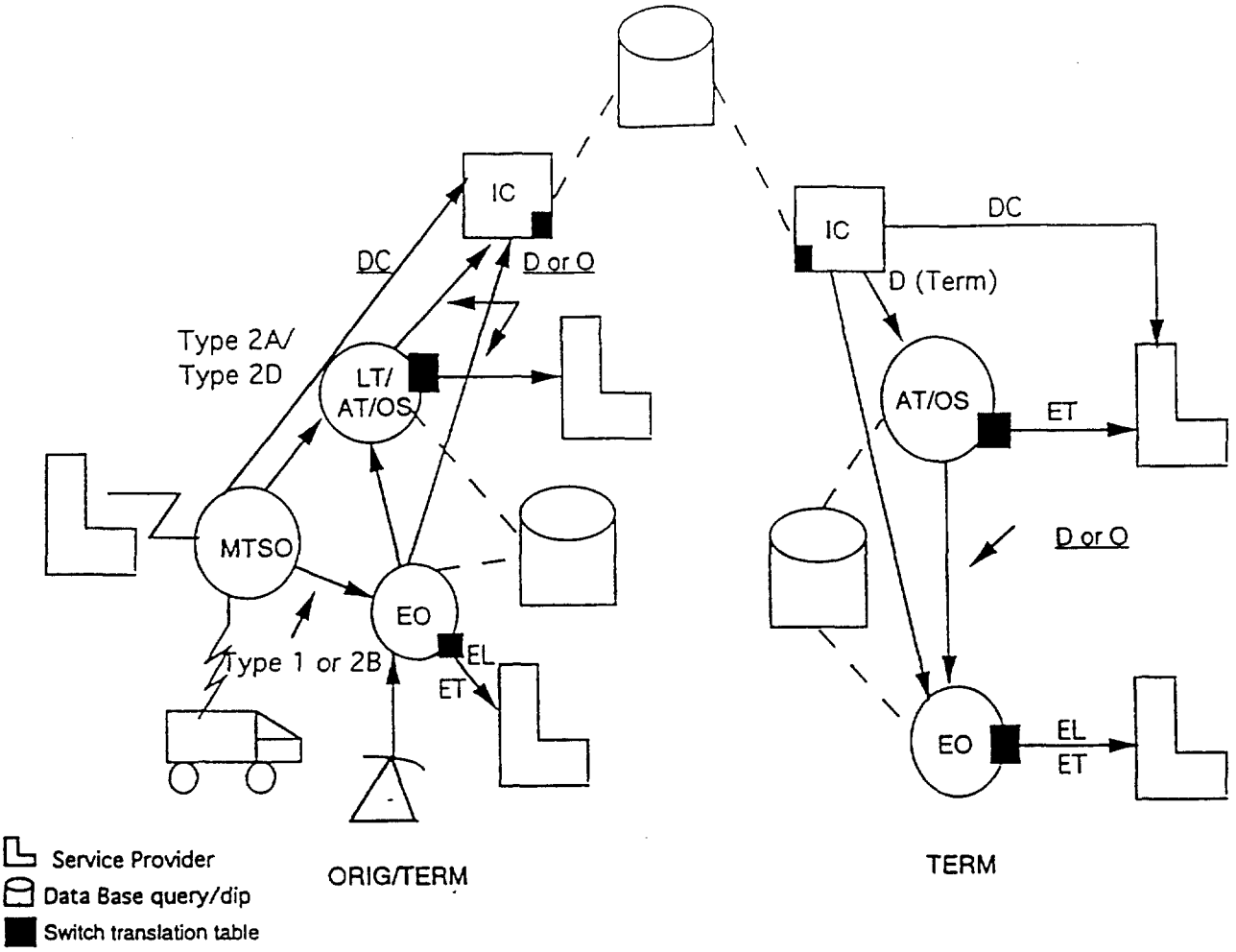

From	To	Signaling
MTSO*	EO	Type 1 or 2B
MTSO*	LT/AT/OS	Type 2A/Type 2D
MTSO	IC	D, O, DC (Subject to negotiation)
AT/OS	IC or SP	D, O
EO	IC or SP	D, O
EO	SP	EL
EO	SP	ET

From	To	Signaling
IC	AT/OS	D (terminating)
AT/OS	SP	ET
EO	SP	EL
EO	SP	ET
IC	SP	DC (subject to negotiation)

Options
Dialing: 7 or 10 digit
Translations: originating or terminating
Routing: PIC, designated carrier or service provider
Signaling Interface: FG D, OSS, Type 1, 2A, 2B, 2D or Exchange

Abbreviations
D = Feature Group D
O = Operator Services Signaling
EL = Exchange Line Side
ET = Exchange Trunk Side
LT = Local Tandem
DC = Direct Connection
MTSO = Mobile Telephone Switching Office
AT = Access Tandem
EO = End Office
IC = Interexchange

* Not all of these interconnections support subscribers ANI. (See TR-NWT-000145 [Compatibility Information for Interconnection of a Wireless Service Provider and the Local Exchange Network] for details.)

Figure 3-2

3.3 Potential 555 Technical Service Arrangements (Table 1)

Table 1 summarizes potential technical service interconnection arrangements that could be considered for the implementation of services using the 555 number resource. Although the Table lists several arrangements, it may not be inclusive of all possible applications; it is included to provide the reader with examples of potential service arrangements.

The service types identified in Column I. indicate whether the application is for a DA-like service or information service. Column II. shows the party(ies) who may be billed for each of the service applications. The potential need for end user blocking is shown in column III. Columns IV. and V indicate what both the dialing plan and the routing translations could be on either a 7 or 10 digit basis. Column VI. describes the call routing which might be to a local termination (e.g., intraLATA service) or to an interexchange carrier which could be either the PIC of the originating caller or the carrier designated by the 555 assignee. Possible signaling/protocol arrangements that might be available for each application are depicted in Column VII.

TABLE 1 - Potential Technical Service Interconnection Arrangements

I. Service	II. Billed to	III. Blocking	IV. Dialing Plan	V. Translations Note 2	VI. Routing	VII. Signaling/ Protocol
DA-like	Calling Party 555 Assignee	May be required. Note 1	7/10D	7/10D	Local Term PIC Designated Carrier	MF, SS7/ FG D OS Type 1 Type 2
800-like	555 Assignee	No	7/10D	7/10D	Local Term PIC Designated Carrier	MF, SS7/ Exchange FG D Type 1 Type 2
900/976-like	Calling Party 555 Assignee	May be required. Note 1	7/10D	7/10D	Local Term PIC Designated Carrier	MF, SS7/ Exchange FG D Type 1 Type 2

Note 1 Blocking may be required to meet regulatory requirements, depending on the type of service.
Note 2 The translation of the dialed number to a different (routable) number could be performed in the originating, intermediate or terminating network.

4.0 BLOCKING CONSIDERATIONS

Blocking will be implemented according to jurisdictional rules/requirements. Additional blocking requirements by an end user, 555 assignee, or network provider may be provided on an individual case basis.

5.0 BILLING AND ORDERING CONSIDERATIONS

Although billing and ordering arrangements are outside the scope of this document, some high level ordering and billing considerations are included in this section.

5.1 Ordering

Ordering technical service interconnection arrangements is expected to be a process that will involve local service providers, long distance providers and 555 assignees. It is expected that a 555 assignee who wishes to order service will do so from an exchange/access provider. This may be line or trunk side depending on the signaling capabilities needed and volume of calls. Because of the variety of potential technical service interconnection arrangements, it is expected that local exchange providers will develop appropriate ordering arrangements. Additionally, if the 555 assignee intends to provide the 555 service across jurisdictional boundaries, some arrangement may need to be made with an interexchange carrier. For these reasons, it is expected that the 555 assignee will coordinate efforts to order these services.

The assignment of a 555 number does not initiate the implementation of any technical service interconnection arrangement that may be necessary to complete 555 calls. Rather, it is expected that access service requests (ASRs) or an exchange service order, if the service is a local application, will be initiated by the 555 assignee, or their agents, in all locations in which the 555 assignee wishes to receive calls dialed with its assigned number.

5.2 Billing

It is expected that technical service interconnection arrangements will have the functionality needed to perform appropriate AMA recording to support billing. Charging scenarios may include calling party pays,[6] called party pays or a combination thereof and appropriate access/exchange transport charges.

[6] It should be noted that pay-per-call services are a subset of calling party pays service. (See definition of pay-per-call service in Section 7.)

6.0 NETWORK CONSIDERATIONS

Network service capabilities required to route 555 calls presently exist for some, but not all of the technical service interconnection arrangements described in Section 3. Basic to the provision of these arrangements is the use of 7 or 10 digit analysis of the dialed 555 number and associated translation to route the call to the designated carrier or the location designated by the 555 assignee. Depending upon the specific technical service interconnection arrangement desired, this translation capability could be provided in either the originating, intermediate or terminating network(s).

6.1 Availability of Digit Analysis and Translation

Both, an exchange service arrangement used to complete 555 calls on a local basis, and an exchange access arrangement used to route a 555 call to an interexchange carrier other than the PIC, would require 7 or 10 digit translation provided either internal to a switch or via an external data base. The capability for the necessary 7 or 10 digit translation could be available in each end office or the call could be routed to a point of concentration, e.g., a tandem switch where the translation could be performed.

Although switch based 7 or 10 digit translation is possible, this methodology requires additional switch memory and may be difficult to implement in some networks. Alternatively, the necessary translation could be performed using IN or AIN features, together with an external database. Specific 3 digit ("555") or 6 digit "NPA-555") triggers would initiate queries to a database where routing information associated with specific dialed (7 or 10 digit) 555 numbers would be retrieved and provided to the network switch. Although IN and AIN capabilities are increasingly available in some local exchange and interexchange carrier networks, they are not yet ubiquitous.

As explained in Section 2.1, digit analysis is required to identify the 555 call so that the necessary call processing can be provided. Specifically, 3 digit analysis (555) is necessary if the "555" call is dialed with 7 digits and 6 digit analysis (NPA-555) may be required if the call is dialed as a 10 digit call. This 3 or 6 digit analysis is required in each and every end office, regardless of whether translation is initiated in the end office, or performed in a tandem switch.

Although six digit analysis is available in most end offices, it is typically used only for Home NPA (HNPA) calls, or, at most, for calls dialed with the HNPA and the few NPAs adjacent to the HNPA. Calls dialed with a foreign NPA (FNPA, [e.g., 1+ NPA 555-XXXX]) are subject to three digit analysis which is only sufficient to identify the call as interLATA and route the call to the PIC. Accordingly, in order to route calls dialed with

an FNPA [e.g., (FNPA) 555-XXXX] to a carrier other than the PIC, six digit anlaysis for calls dialed with any NPA (i.e., both HNPA and FNPA alike) would be required.[3]

If calls are dialed using seven digits (555-XXXX), the three digit analysis currently performed in end offices would be sufficient to recognize the 555 call and initiate the necessary call processing or route the call to a tandem switch

6.2 Signaling Protocol

It appears that access customers and transport providers may find it desirable to receive the dialed number and ANI in the signaling information existing in FG D signaling protocol. Today, FG D signaling protocol is provided in access connections when calls are routed to the PIC of the calling line or the carrier identified by Carrier Access Code (10XXX/101XXXX) dialing. In addition, FG D signaling protocol is provided on SAC dialed calls (e.g., 500, 800, 900) where the identity of the access customer is derived from the dialed number. The use of FG D protocol for 555 calls would allow routing based upon information derived from the dialed digits. Where both the dialed number and ANI are not desired or available, other types of signaling protocol could be utilized for routing and billing.

FG D signaling is typically not available with (non-access) exchange signaling. Exchange signaling may be either MF or SS7 signaling and may not include ANI.

6.3 Calls Routed to the Designated Carrier's Network

It is assumed that calls forwarded to a designated carrier could include, the dialed 555 number. Accordingly, the designated carrier could be required to perform an additional 7 or 10 digit analysis and translation to determine the destination of the call; that is, the location designated by the 555 assignee. In some cases the location of the 555 assignee will be directly connected to the designated carrier's network. Alternatively, if there were no direct connection, the designated carrier could translate the dialed 555 number to a routable number and complete the call via a terminating network using terminating switched access.

6.4 Calls Routed to the Presubscribed Interexchange Carrier (PIC)

Existing capabilities within the originating network would allow interLATA 555 calls to continue to be forwarded to the PIC of the calling line or the carrier designated by Carrier Access Code (10XXX/101XXXX) dialing, using FG D signaling protocol. With

[3] It is recognized that there may be local networks which are unable or unwilling to perform the translations necessary to route a call dialed with a 555 number. In such cases, these networks may elect to pass the call to another network.

this arrangement, the PIC may have the information necessary to route the call to the location designated by the 555 assignee, or the PIC could route the call to a designated switch in the terminating network. That switch may have the information necessary to route the call to a location designated by the 555 assignee.

6.5 Additional Considerations

In areas where 555 service is offered, any arrangements currently employed by carriers which only allows calls to (NPA) 555-1212 and blocks all other (NPA) 555-XXXX calls to Directory Assistance, or routes all NPA 555-XXXX calls to DA, regardless of the "555" line number dialed, will need to be removed if completion of calls to other 555 numbers is desired. Finally it should be recognized that any implementation of routing for 555 calls must retain the current disposition of calls dialed (1) + (NPA) 555-1212. These calls will continue to be routed to the originating service provider, PIC of the calling line or the (10XXX/101XXXX) designated carrier.

It should be further recognized that support of multiple technical service interconnection arrangements for 555 could have extensive technical network impacts and may not be practical or feasible for all network providers.

7.0 GLOSSARY

This section includes a glossary of terms and acronyms used in this document.

7.1 Definitions

555 Assignee - the entity to whom a 555 number has been assigned.
Access Provider - Any Local Exchange Carrier who provides network interconnection arrangements to permit Access Customers to originate and/or terminate telecommunications in the areas in which the Local Exchange Carrier offers telecommunications services.

Advanced Intelligent Network (AIN) - A service-independent architecture which allow its service provider to create/or modify telecommunications services.

Automatic Number Identification (ANI) - The automatic identification of the calling station. The ANI normally consists of the calling party's billing number.

Carrier Identification Code (CIC) - a numeric code which is currently used to identify an customer who purchased Feature Group B and/or Feature Group D access services.

Called Party Pays - A service for which the end user receives and pays for call.

Calling Party Pays - A service for which the end user originates and pays for a call.

Designated Carrier - The carrier selected by the 555 assignee. The Designated Carrier is determined via 7 or 10 digit translation of the dialed number.

Directory Assistance (DA) - A service providing the listed telephone number for a given name and address.

Directory Assistance Call Completion (DACC) - After the listed telephone number has been obtained, DACC is a service that permits a call to be completed to the requested number, typically at the calling party's option for an additional charge.

Exchange Access Services - Exchange access is a service provided by LECs to interconnecting entities (such as interexchange carriers) in the areas in which the LECs offer telecommunication services.

Foreign NPA (FNPA) - Any other NPA outside the geographic NPA from which a call originates.

Home NPA (HNPA) - The geographic NPA from which a call originates.

Interexchange Carrier (IC) - A common carrier that provides services to the public between local exchanges on an intraLATA basis in compliance with local or Federal regulatory requirements and that is not an end user of the services provided.

Industry Carriers Compatibility Forum (ICCF) - An open forum under the auspices of the Carrier Liaison Committee to encourage telecommunication entities to discuss and resolve, on a voluntary basis, national technical issues associated with telecommunications network interconnection, and the issues associated with the assignment and use of NANP/World Zone 1 numbering resources.

Industry Numbering Committee (INC) - A standing committee of the Industry Carriers Compatibility Forum (ICCF) that provides an open forum to address and resolve industry-wide issues associated with the planning, administration, allocation, assignment and use of numbering resources and related dialing considerations for public telecommunications within the North American Numbering Plan (NANP) area.

Intermediate Network - Any interconnecting network (s) between the originating network and terminating network.

Local Access and Transport Area (LATA) - A geographic area within which the RBOCs and GTE may offer services.

Local Exchange Routing Guide(LERG) -A document that contains local routing data reflecting the current network configuration and scheduled network changes for all entities originating or terminating PSTN calls with the NANP excluding Canada.

National 555 Number - A national number is a unique line number in the 555 NXX assigned to an entity for use in all or most of the geographic NPAs in World Zone 1. A number will be designated as a national number if it is to be used in at least 30% of all NPAs or states or provinces in World Zone 1. National numbers cannot be assigned by the Administrator to any other entity.

NANP (North American Numbering Plan) - A numbering architecture in which stations in the NANP area are identified by a unique ten-digit address consisting of a three-digit NPA code, a three-digit central office code of the form NNX/NXX, and a four-digit line number of the form XXXX where N represents the digits 2-9 and X represents any digit 0-9.

NANP area (formerly known as World Zone 1) - Currently consists of United States, Bermuda, Canada and some Caribbean administrations.

Non-national 555 Number - A non-national number is a line number in the 555 NXX assigned to an entity for use in a specific geographic area or areas (NPAs, states, or provinces). A number will be designated non-national if it is to be used in fewer than 30% of NPAs or states or provinces. Non-national numbers are available for assignment to multiple entities, assuming those entities wish to use the non-national number in different geographic NPAs.

Numbering Plan Area (NPA) - A 3-digit code, also called area code, that occupies the A, B, and C positions in the 10-digit NANP format . NPAs are of the form NXX, where N represent the digit 2-9 and X represents any digit 0-9. In the NANP, NPAs are classified as either geographic or non-geographic.

Originating Network - the network from which the end user obtains access to the Public Switched Telecommunication Network (PSTN).

Pay-Per-Call Service - (The definition of pay-per-call service is extracted from the TDDRA of 1992 Public Law 192-556, 47USC 228.)

(1) The term 'pay-per-call services' means any service --

A) in which any person provides or supports to provide--

I. Audio information or audio entertainment produced or packaged by such person;
II. access to simultaneous voice conversation service; or
III. any service, including the provision of a product, the charges for which are assessed on the basis of the completion of the call;

B) For which the caller pays a per-call or per-time-interval charge that is greater than, or in addition to, the charge for transmission of the call; and
C) which is accessed through use of 900 telephone number or other prefix or area code designated by the Commission....

(2) Such term does not include directory services provided by a common carrier or its affiliate or by a local exchange carrier or its affiliate or any service the charge for which is tariffed, or any service for which users are assessed charges only after entering into a presubscription or comparable arrangement with the provider of this service.

Presubscribed Inter LATA Carrier (PIC) - the carrier selected by the customer if they wish to be presubscribed to an IC rather than selecting the IC on every interLATA call. The PIC is also frequently referred to as the presubscribed IC. In the context of this document PIC is also used as the Presubscribed IntraLATA Carrier.

Plain Old Telephone Service (POTS) - POTS Plain Old (POTS) is a term used to refer to lines connected to a local switching system that have basic service capability. Such lines are not identified within a closed user group such as centrex or connected to Customer Premises Equipment, i.e., PBX.

Service Switching Points (SSP) - A network element that initiates a dialogue with a database(s) in which the logic for the requested service resides.

Service Provider (SP) - Any entity that is authorized, as appropriate, by local government, state, federal, or other governmental authorities within the NANP area to provide telecommunications service to the public.

Signaling System 7 (SS7) - An international standard, general purpose CCS (Common Channel Signaling) protocol.

Terminating Network - The network that delivers the call directly to the service provider.

Trigger - An intelligent network switch functionality that allows suspension of call processing in order to query an external database to obtain additional information, e.g.,

routing or billing information. An example of one type trigger is analysis of the dialed digits, i.e., either 3 digits, 6 digits or 10 digits.

7.2 Acronyms

AIN (Advanced Intelligent Network)
ANI (Automatic Number Identification)
ANI II (Automatic Number Identification Information Integers)
ASR (Access Service Request)
AT (Access Tandem)
CIC (Carrier Identification Code)
DA (Directory Assistance)
DACC (Directory Assistance with Call Completion)
EL (Exchange Service Line Side)
ET (Exchange Service Trunk Side)
EC (Exchange Carrier)
EO (End Office)
FNPA (Foreign NPA)
HNPA (Home NPA)
IC (Interexchange Carrier)
ICCF (Industry Carriers Compatibility Forum)
IN (Intelligent Network)
INC (Industry Numbering Committee)
ITC (Independent Telephone Company)
LATA (Local Access and Transport Area)
LEC (Local Exchange Carrier)
LERG (Local Exchange Routing Guide)
MF (Multi Frequency)
MSC (Mobile Switching Center)
MTSO (Mobile Telephone Switching Office)
NANP (North American Numbering Plan)
NPA (Numbering Plan Area)
OS (Operator Switch)
PIC (Presubscribed Interexchange Carrier)
POP (Point Of Presence)
SAC (Service Access Code)
SP (Service Provider)
SSP (Service Switching Points)
SS7 (Signaling System 7)

APPENDIX A

History

Historically, the 555 line number range has been associated primarily with Directory Assistance (DA) and the use of fictitious numbers by the advertising and entertainment industries. The Industry examined the feasibility of a broader use of this resource. In December 1992, industry consensus was reached that the use of 555 numbers could meet an industry need for providing different types of public information services.

In April of 1994, the Industry approved the 555 NXX Assignment Guidelines (INC 94-0429-002). The 555 NXX Assignment Guidelines apply to the use of 555 numbers for the provisioning of information services but may include a broad range of existing and future services as well. The North American Numbering Plan Administration (NANPA) began accepting applications for 555 line numbers on June 17, 1994. Those numbers became available for assignment beginning July 8, 1994. However, a set of numbers was grandfathered for existing applications (See Appendix B).

555 Network Today

Today, the 555 NXX is used almost exclusively for the provision of Local Exchange Carrier (LEC) Listing Retrieval Services, e.g. Directory Assistance (DA). Depending upon local dialing patterns, some originating callers dial (1) + (HNPA) + 555-1212, and others dial 555-1212. In most cases, the end office performs digit translation only to the NXX level and routes the call to the Operator Switch/Access Tandem (OS/AT). Billing recording is done at the end office and Operator Services Signaling (OSS) is not required. Calls from some Independent Telephone Company (ITC) customers are routed to an OS/AT of another LEC for the provision of basic DA.

From equal access end offices, if a customer dials an interLATA (1) + NPA + 555-1212, the end office performs three or six digit translation and the call is routed to the customer's Presubscribed Interexchange Carrier (PIC) like any other InterLATA call using FG D signaling. The Interexchange Carrier (IC) will route the call using the NPA-NXX and deliver the call to the appropriate terminating Access Tandem (AT) or OS as specified in the LERG. The IC performs the recording by using the Automatic Number Identification (ANI) information provided via the FG D signaling.

After an operator has retrieved listing information, Directory Assistance with Call Completion (DACC), where it is available, permits a call to be completed to the requested number typically at the customer's option for an additional charge. In order for the OS to perform the appropriate rating and billing for the second leg of the call, OSS is required between the originating end office and the OS. OSS permits

forwarding the ANI of the calling party to the OS for billing recording purposes. The DA traffic from the end office to the OS could be routed on a separate trunk group or could be combined with other operator traffic, e.g. 0-, 0+.

Some LECs have the ability to provide DACC on DA calls originating from cellular carriers. A dedicated trunk group using FG D signaling between the Mobile Switching Center (MSC) and the OS is required. DACC is not currently provided on DA calls terminating from an IC.

Current Regulatory Considerations

There are regulatory activities at the Federal and potentially at the state level which may impact the delivery of 555 calls. 555 assignees should be aware of these regulations as they impact the service offering 555 assignees may wish to provide.

APPENDIX B

Listing of Grandfathered Numbers

555 Line Number	NPA(s) in Which Line Number is Grandfathered
1000	207, 401, 413, 508, 603, 617, 802
1212	All
1234	505, 602
1313	506
1515	201, 207, 401, 413, 508, 603, 609, 617, 802, 908
1611	207, 401, 413, 508, 603, 617, 802
1717	207, 401, 413, 508, 603, 617, 802
1811	207, 401, 413, 508, 603, 617, 802
4433	808
4652	203, 212, 315, 516, 518, 607, 716, 718, 914, 917

INC

INDUSTRY NUMBERING COMMITTEE

UNDER THE AUSPICES OF THE CARRIER LIAISON COMMITTEE

Jo Gallagher, INC Moderator
Bell Atlantic
703 974-8160
fax: 703 974-0616
email:
josephine.a.gallagher@bell-atl.com

Paula Jordan, INC Assistant Moderator
AirTouch
510 988-4427
Fax:510 988-4420
email:
paula.jordan@airtouch.com

Kathy Cullen, Bellcore
ICCF/INC Secretary
908 699-3245
Fax: 908 336-3640 or 2304
email:
kcullen@notes.cc.bellcore.com

SPONSORED BY ATIS, THE ALLIANCE FOR TELECOMMUNICATIONS INDUSTRY SOLUTIONS

Industry Numbering Committee (INC)

UNIFORM DIALING PLAN

TABLE OF CONTENTS

SECTION	TITLE	PAGE
1.0	PURPOSE AND SCOPE	3
2.0	ASSUMPTIONS AND CONSTRAINTS	3
3.0	UNIFORM DIALING PLAN ALTERNATIVES	5
4.0	AREAS OF IMPACT	8
4.1	NANP IMPACTS	8
4.2	DIRECTORY IMPACTS	9
4.3	END USER IMPACTS	9
4.4	NETWORK IMPACTS	10
4.5	TERMINAL EQUIPMENT, CPE, COIN IMPACTS	11
4.6	OPERATIONS SUPPORT SYSTEMS IMPACTS	12
4.7	OPERATOR SERVICES IMPACTS	13
5.0	EVOLUTION CONSIDERATIONS	13
6.0	RECOMMENDATIONS	15
7.0	GLOSSARY	16

Appendix A

Appendix B - NARUC Report

ATTACHMENTS A & B

1.0 Purpose & Scope

The purpose of this document is to evaluate potential uniform dialing plans for the North American Numbering Plan (NANP) serving area and make appropriate recommendations. The document includes a brief history of dialing in the NANP area, provides comparisons of identified dialing plan alternatives considering specific impact areas (e.g., end user impacts), and recommends a transition to a uniform dialing plan described in Section 6. The North American Numbering Plan Administration (NANPA) proposed in its document "Proposal on the Future of Numbering in World Zone 1" (IL 93/01-008) that the telecommunications industry study the feasibility of a uniform dialing plan. On December 10, 1993, NANPA introduced Issue #020 to the Industry Numbering Committee (INC). This issue suggested that the industry study the dialing considerations and feasibility of implementing a uniform dialing plan in the NANP serving area and make appropriate recommendations, including the possible evolution to 10-digit dialing. The primary benefit is that a uniform dialing plan would be more customer focused particularly in today's mobile society. In addition, it would effectively support a consistent, fair and equitable competitive environment.

A set of alternative dialing plans were proposed in INC Workshops as candidates for a uniform dialing plan. These alternate plans included six variations of using either 7 digits, 10 digits, or 1 + 10 digits in various combinations to make local and toll calls to Home NPAs (HNPA) or Foreign NPAs (FNPA). A set of impact areas was developed by the workshop for use in comparing each alternative. These areas included sociological factors/human factors, and impacts on networks, the NANP, CPE (Customer Provided Equipment), coin services, operator services, etc. Attachment A illustrates the current use of dialing combinations on a mandatory and permissive basis for local and toll calling in NANP locations (i.e., total of NPAs and countries within NPAs).

2.0 Assumptions and Constraints

The following are assumptions and constraints that were used in the development of a uniform dialing plan.

2.1 The uniform dialing plan described in this document is intended to apply to geographic numbers dialed from within the area served by the NANP.

2.2 Both regional and national regulatory concerns must be considered in the development of a uniform dialing plan. These concerns typically include the

varied use of 7-digit and 10-digit dialing arrangements and their associated prefixes (e.g., 1+)[1].

2.3 Given the current regulatory constraints, a flash cut to a uniform dialing plan is not possible. Therefore, no timeframe for the transition or migration to a uniform dialing plan has been established.

2.4 Implementation of the recommendations contained herein will be subject to regulatory oversight and will apply to all segments of the industry, as appropriate.

2.5 The following factors were considered in the development of the uniform dialing plan:
- NANP impacts
- Directory impacts
- End user impacts
- Network impacts
- Terminal equipment, CPE, coin impacts
- Operations support systems impacts
- Operator services impacts

2.6 The use of NPA overlays in providing relief for exhausting area codes will expedite migration to 10-digit local dialing.

2.7 Technological advances will augment dialing procedures in the future. These advances, such as the availability of a toll warning indicator, smart telephone sets, voice activated dialing, etc. should be considered in the migration to a uniform dialing plan.

2.8 A uniform dialing plan does not preclude local jurisdictions from permitting non-conflicting alternatives (e.g., 7-digit local dialing).

2.9. Notwithstanding the use of local options, it is expected that the uniform dialing plan will ultimately be implemented throughout the NANP serving area at some future date.

The remainder of this page is intentionally blank.

1 Dialing of service codes (e.g. 911), SACs (e.g. 500, 800), access codes (e.g. 101XXXX, 950-XXXX) and 555 numbers are not addressed in this report.