ORIGINAL

FISHER WAYLAND COOPER LEADER & ZARAGOZA L.L.P.
2001 PENNSYLVANIA AVENUE, N.W.
SUITE 400
WASHINGTON, D. C. 20006-1851
TELEPHONE (202) 659-3494

BRUCE D. JACOBS
(202) 775-3543

FACSIMILE
(202) 296-6518

INTERNET
bjacobs@fwclz com

March 19, 1998

RECEIVED
MAR 19 1998
FEDERAL COMMUNICATIONS COMMISSION
OFFICE OF THE SECRETARY

Ms. Magalie Roman Salas
Secretary
Federal Communications Commission
1919 M Street, N.W.
Room 222
Washington, D.C. 20554

Re: Report to Congress on Universal Service
CC Docket No. 96-45
Ex Parte Presentation

Dear Ms. Salas:

On behalf of the Voice on the Net (VON) Coalition, on March 11, 1998 Tom Evslin of ITXC Corp., C. Holland Taylor of USA Global Link, Scott Harris of Harris Wiltshire & Grannis, and Bruce Jacobs and Glenn Richards of this law firm met with the following staff of the International Bureau to discuss IP voice services: Diane Cornell, Helene Domenici, Mindy Ginsburg, Jamie Hedlund, Adam Krinsky, Joanna Lowry, Troy Tanner, and Tom Wasilewski. The substance of the meeting is covered in the attached White Paper.

Please contact the undersigned if there are any questions concerning this matter.

Very truly yours,

Bruce D. Jacobs

cc: Diane Cornell
Helene Domenici
Mindy Ginsburg
Jamie Hedlund
Adam Krinsky
Joanna Lowry
Troy Tanner
Tom Wasilewski

No. of Copies rec'd 0+1
List ABCDE

Before the
FEDERAL COMMUNICATIONS COMMISSION
Washington, D.C. 20554

Report to Congress on Universal Service	))	CC Docket No. 96-45

RECEIVED

MAR 1 9 1998

FEDERAL COMMUNICATIONS COMMISSION
OFFICE OF THE SECRETARY

White Paper on IP Voice Services

Voice on the Net (VON) Coalition

Bruce D. Jacobs
David K. McGraw
Fisher Wayland Cooper Leader &
Zaragoza, L.L.P.
2001 Pennsylvia Avenue, NW
Washington, D.C.20006

March 18, 1998

IP VOICE SERVICES

The development of the Internet and Internet-Protocol-based networks, including the development of IP voice services, is having a profound and beneficial impact on the United States and the world. Use of voice over IP networks is drastically reducing the cost of international communications, improving an imbalance in U.S. trade, and creating a foundation for broadband communications that have much greater capacity and functionality than is offered by the current Public Switched Telephone Network. Gateways that permit users to access IP voice services with a telephone handset are providing the first Internet applications for people without computers.

The development of IP voice services promotes and is consistent with the goals of Universal Service. Not only is voice over IP making communications more affordable (particularly with respect to international service), but providers of IP voice services are willing to contribute to the support of Universal Service programs in a way that is competitively neutral among functionally equivalent services. Such contributions, however, should recognize that: (i) while other voice services may be functionally equivalent to IP voice services in some respects, IP voice services are properly characterized as "enhanced" or "information" services because of their intrinsic use of IP and computer processing; (ii) IP voice services, when separated from the provision of potential monopoly transmission facilities, should not be regulated; and (iii) IP voice services should not be required to participate in the current access-charge regime, which was developed for circuit-switched networks. Deployment of IP voice services on public networks for domestic use is proceeding slowly enough that any changes that must be made to establish competitive neutrality in Universal Service support can be accomplished without significant dislocations.

Background

Internet Protocol Generally. Transmission Control Protocol/Internet Protocol ("TCP/IP" or "IP") is a set of rules that facilitates the communication of data among computers operating on a wide variety of networks with differing hardware configurations and operating systems, deploying different protocol-independent applications. This flexibility and the creativity of the millions of people who have made use of it, has made IP the common element in and the foundation for the phenomenal growth of the Internet, an interconnected group of thousands of computer-based networks.

On IP networks, all data, whether voice, text, video, computer programs, or numerous other forms of information, travel though the network in packets. Each destination in the system has a unique IP address, and packets are routed to their destination according to the address contained in a header. Data may be transmitted at the same time from one user to many users and data addressed to various users can share the same line.

IP networks trade increased use of computer processing for a decreased use of transmission facilities. As the cost of computer processing continues to decrease and the demand for communications bandwidth by consumers increases, IP systems will increasingly offer a more economical and substantially improved means for providing communication connections. By contrast, conventional telephone systems require more lines and a more complex topology.

At the local level, the conventional telephone system works on the model that each customer's equipment must be connected by a continuous line to a telephone company switch, whether or not the line is actually in use. At the long-distance level, a continuous link must be established between each pair of users for the duration of a call, regardless of the actual information sent through that path.

IP networks also offer the potential of higher reliability than the circuit-switched PSTN. IP networks automatically re-route packets around problems such as malfunctioning routers or damaged lines. IP networks do not rely on a separate signalling network.

One of the key attributes of IP is its openness. Many networks, including the PSTN, operate as closed systems on which it is impossible for innovative developers to build new applications. (The failure of Advanced Intelligent Networking illustrates the problem of closed systems impeding the development of innovative products and services.) IP is a nonproprietary standard agreed on by a consortium of hardware and software developers, and is free to be used by anyone. As such, it permits entrepreneurial firms to develop new hardware and software applications that can seamlessly fit into the network.

Transmission and Reception of Speech Using IP. The first component in an IP voice system in which the user has a personal computer or is on a handset with an analog connection is the digitization of the speaker's voice. The next step (and the first step when the user is on a handset connected to a gateway using a digital PSTN connection) is typically the suppression of unwanted signals and compression of the voice signal. This has two stages: (i) the system examines the recently digitized information to determine whether it contains a voice signal or merely ambient noise and discards any packets that do not contain speech (this requires the system to be able to distinguish the properties of a human voice, which needs to be transmitted, from those of ambient noise, which can be ignored) and (ii) the use of complex algorithms to reduce the amount of information that must be sent to the other party. The development of increasingly sophisticated codecs is key to the success of suppression and compression.

Once the data has been compressed, it must be packetized and have protocols added. Some storage of data occurs during the process of collecting voice data, since the transmitter must wait for a certain amount of voice data to be collected before it is grouped together as a packet and sent through the network. There are also brief periods of data storage during the encoding and compression processes. Protocols are added to the packet to facilitate its transmission across the network. For example, each packet will need to contain the address of its destination, a sequencing number in case the packets do not arrive in the proper order, and additional data for error checking. Because IP is a protocol designed to interconnect networks of varying kinds, substantially more processing is required than in smaller networks, the network addressing system can often be very complex, requiring a process of encapsulating one packet inside another and, and as data moves along, re-packaging, re-addressing, and re-assembling the data.

When each packet arrives at the destination computer, its sequencing is checked to place the packets in the proper order. A decompression algorithm is then used to restore the data to an

approximation of its original form, and clock-synchronization and delay-handling techniques are used to ensure proper spacing. Since packets of data travel through the network along various routes, they do not necessarily arrive at the destination in the proper order. Therefore, incoming packets are stored for a time in a jitter buffer to wait for late-arriving packets. The length of time in which data are held in the jitter buffer varies depending on the characteristics of the network.

On the open Internet, a large percentage of the packets can be lost or delayed, particularly during periods of congestion. In addition, some packets must be discarded because errors have occurred during transmission. These lost, delayed and damaged packets cause substantial deterioration of sound quality. In conventional error correction techniques used in other protocols, incoming blocks of data containing errors are discarded, and the receiving computer requests the retransmission of the packet, thus the message that is finally delivered to the user is exactly the same as the message that originated. Since IP voice systems are more time-sensitive and cannot wait for retransmission, more sophisticated error detection and correction systems are used to create sound to fill in the gaps. This process stores a portion of the incoming speaker's voice, then using a complex algorithm to "guess" the contents of the missing packets, new sound information is created to enhance the communication. Thus, the sound heard by the receiver is not exactly the sound transmitted, but rather portions of it have been created by the system to enhance the delivered sound.

IP Voice Configurations. The processing that was just described can be done either at the user's premises or at a service provider's premises. Initially, the typical configuration (shown in Figure 1) has involved a PC located at the user's premises. This typically involves all the parties to the call getting on-line and connecting in a "chat room" established by a service provider. With the introduction of gateways (specialized computers that at a minimum provide an interface between IP network and other networks such as the circuit-switched PSTN), it is increasingly possible to use other equipment such as a common telephone handset to use IP voice. The gateway can be located either at the user's premises (Figure 2) or at a remote site accessed by conventional phone lines (Figure 3). In the future, there are likely to be hybrid appliances that have more functionality than a telephone handset but less than a PC. Such a device may have a computer screen and provide the user with text and video information simultaneously with the audio content of the voice conversation. In some cases, the use of a hybrid appliance may negate the need for a gateway; in others, a gateway may still be useful to provide additional computer power (Figure 4).

In all of these cases, unless the user has a continual IP connection, it will be necessary for the party originating the communications to first establish the IP connection (either through the use of a dial-up modem or by using the keypad on a phone) and then go through a separate process to establish a connection with the terminating party or parties (such as dialing the additional phone numbers, in the case of a gateway connection.)

The ideal is for all users of IP voice to have a continual connection to an IP network. This permits optimal use of the flexibility provided by IP to manage broadband communications. For the foreseeable future, however, there will always be some users who can communicate with IP networks only by using "legacy" systems, including conventional telephone handsets. For these

users, gateways will provide the only available access (Figure 5).

IP Voice Services. The development of IP voice services is just beginning. The first two-way application was an attempt to reproduce speech as accurately as possible under the worst possible conditions, involving little bandwidth and high error rates. Applications have been developed that permit users with a personal computer to combine speech with other forms of data, including video, text, and graphics. Thus, for instance, two people can see each other while they talk and can trade text, jointly process a document or draw and review diagrams on an electronic whiteboard. More advanced collaborative applications take advantage of the flexibility of packet-switching to permit all of this information transfer to be shared simultaneously by many different users. The potential of these applications for education, business, and consumer use is extraordinary and goes far beyond what is practical in a circuit-switched environment using the PSTN alone.

These applications do not require the use of a personal computer. With gateways, users that do not have a PC nonetheless can take advantage of at least a subset of these services. As with PC-based IP voice services, the first gateway applications to develop have been simple ones that focus on providing the best quality with the lowest quality inputs, but more functional applications are being developed. By using the computer-processing capability of the gateway, the user of a simple handset can gain tremendous additional functionality, typical of IP networks. For instance, gateways may be used to provide inexpensive voice-conferencing that could be very useful for educational applications involving a few people or hundreds of people, something that would be impossible or far too expensive on the PSTN. The likely situation is that some users would access such a classroom using a PC, while others would do so using gateways and a simple telephone handset.

Gateways may be used to facilitate retrieval of information from data bases on websites or elsewhere, using either handset-generated tones or voice recognition technology. Gateways that contain voice recognition software may be used by the hearing impaired with a TTY device to translate between text and speech, without the need, as is the case now, for a human relay. A voice recognition program could convert the hearing speaker's voice into text to be transmitted to the deaf user's TTY, and the deaf user's text could be converted to speech by voice synthesis software. (As voice recognition and language translation technology improve, it is not far-fetched to imagine the use of gateways to interpret for users that speak different languages.)

Voice messaging systems and store-and-forward programs may be added to a gateway. All of the functions currently available to electronic mail users, such as the ability to store pre-programmed mailing lists and distribute a single message to numerous recipients, and the option to save, copy, and forward messages may be performed at the gateway level. Users may access a gateway when they contact directory assistance to permit them to create their own personalized directory which might be retrieved and used with voice commands.

The IP Voice Services Business. The deployment of public IP voice services is being driven largely by: (i) the ability to bypass international accounting rates by using value-added data networks and (ii) building the foundation for a future in which IP networks are a ubiquitous

way to efficiently manage information transfer, including voice, video and data, between two people or among many people.

Almost all of the revenue being generated by the use of IP voice services today is from international services. The current international accounting rates regime for the PSTN supports rates that in some cases far above costs and causes a multi-billion dollar annual U.S. trade imbalance. By using IP networks, which are widely-recognized by many foreign governments to be value-added networks that not subject to accounting rate settlements, IP voice service providers can charge far less than those using the PSTN. The availability of this competition, helps put pressure on foreign governments to reform their accounting rate structures and move them closer to true costs. In this respect, the FCC has championed the development of IP voice networks.

In its typical configuration, an IP voice service provider that provides international service to and from the United States does so from a single location, probably co-located with a PSTN switch. In the case of a call originating in the U.S., the IP voice service provider routes the traffic to its gateway usually through an 800 number. In rare cases, there is sufficient traffic in the vicinity of the switch to justify the use of local business lines or ISDN PRI lines to connect users to the service provider's gateway. Similarly, to terminate traffic, the service provider in most cases uses an interexchange carrier that uses feature group access to move traffic from its gateway to the end user, or again in relatively rare cases uses local business or PRI lines.

The development of public IP voice services is also taking place as a component of the deployment of IP networks more broadly as part of a general recognition of the value of broadband, IP-based networks. Networks that use IP offer an inherent efficiency and functionality for communications, particularly those that combine different kinds of data, including voice. In tomorrow's world, much of our electronic communications will take place over IP networks and such networks will replace even many local circuit-switched networks--Local Area Networks will be connected to Metropolitan Area Networks that will be connected to Wide Area Networks, using wired and wireless transmission paths. In that world, higher-speed bandwidth will be more abundant, connectivity will be continual, and users will be able to dynamically assign their bandwidth to a variety of simultaneous streams of information over a single connection, including voice, video, and other forms of data, all subject to the user's information management systems. Several carriers are deploying such networks nationally and on the local level, in anticipation of a continued growth in demand for a variety of services, including voice. The deployment of gateways is a logical component of this deployment, since they make the network more accessible and increase network traffic.

There is a myth that the offering of these services is being driven by the benefits of avoiding interstate access charges through the characterization of these services as enhanced. In fact, the cost of deploying gateways and acquiring local PSTN connections through the purchase of local business lines is roughly three cents per minute, about the same as current access charges. The highest costs are for the gateways themselves, which are currently priced at approximately $500 per port, and for terminating access, which is billed per minute. Moreover, this estimate assumes that it is possible to originate and terminate sufficient traffic using local

lines, an assumption that is very optimistic under current conditions. In many cases, it would be necessary to provide access using interexchange facilities. With access charges moving closer to cost, the deployment of gateways as a form of access charge arbitrage becomes even more unrealistic.

The other area in which IP voice services will grow rapidly is over private networks. Large corporations that operate intranets will add voice traffic to those networks, including the use of gateways for communications with traffic on their PBX. Some offices may replace their PBX entirely and put their voice traffic on a LAN that uses a gateway to connect to the PSTN.

There are a number of impediments to more rapid growth of public IP voice services. These include: (i) the lack of availability of scalable products; at present, the largest gateway available offers 96 ports (modern switches have tens of thousands of ports) and there are no network management and billing systems that are capable of handling large volumes of traffic; (ii) the lack of necessary standardization, to permit one user to communicate with another user; currently, there are several different vendors each offering their own non-standard software and gateways; (iii) frequent problems with congestion on the Internet makes quality of service unreliable, a problem that will not be solved until either the Internet is substantially upgraded or new, managed networks are deployed at considerable expense, something which many existing carriers are unlikely to do given their enormous existing investment in legacy systems; (iv) efforts of existing monopolists to ban or impose inequitable costs on IP voice services; several foreign governments and PTTs have tried to prohibit or restrict the deployment of IP voice services.

Legal and Policy Issues

Public Benefits of IP Voice Services. As demonstrated above, the continued deployment of IP voice services is in the public interest. IP voice services are having a positive impact on international communications and U.S. balance of trade, facilitating the deployment of integrated wideband data services for which the public has shown tremendous demand, providing an opportunity for continued innovation through the use of an open architecture, and in the case of gateways, providing the first Internet application for people without computers.

Impact on Universal Service Support. In many ways, the provision of IP voice services in and of itself furthers many of the goals of Universal Service. For many people, such as immigrants communicating with family members back home, IP voice services make international voice communications affordable. For people without computers, IP voice gateways provide access to the Internet. As computer processing power increases even more, IP voice services will make communications even more affordable and universal.

Defining IP voice services as "information services" and not "telecommunications services" will not harm Universal Service goals. As discussed above, the deployment of IP voice in the near-term will not affect the revenue base for Universal Service contributions. Virtually all of the IP voice services being provided are either for international communications or on private networks that have no revenue. Under the current law, companies that provide only

international services are not subject to Universal Service contributions. Moreover, the international services generally rely on interexchange facilities for originating or terminating access to or from the PSTN in the United States.

IP voice service providers are prepared to contribute in a competitively neutral way to the support of Universal Service programs. But it is critical to establish such a mechanism without defining IP voice services as "telecommunications services." As discussed immediately below, IP voice services meet the definition of both "enhanced services" and "information services." If. however, the FCC were to characterize IP voice services as "telecommunications services" in order to ensure that IP voice service revenue is included in the funding base for Universal Service, it would make it very difficult for U.S. companies to provide IP voice services in many foreign countries without being subject to the accounting rate regime that the U.S. is trying to reform.

IP Voice Services are "Enhanced Services." The origins of the Commission's "enhanced services" classification was its concern that facilities-based common carriers entering the data processing services market might either pass along the cost of their data processing investments to captive ratepayers or take advantage of their telecommunication facilities to unfairly disadvantage their data processing competitors. *Regulatory and Policy Problems Presented by the Interdependence of Computer and Communication Services and Facilities*, 21 RR 2d 1591, 28 FCC 2d 267 (1971) ("*Computer I*"). By 1980, the differentiation between "data processing" and "telecommunications" had become unworkable, and in *Computer II* the Commission refined the distinction by developing the categories of "enhanced service" and "basic service." *Amendment of Section 64.702 of the Commission's Rules and Regulations (Second Computer Inquiry)*, 44 RR 2d 669, 77 FCC 2d 384, (1980) ("*Computer II*").

Against this backdrop, the Commission defined "basic service" as the provision of "pure transmission capability over a communications path that is virtually transparent in terms of its interaction with customer-supplied information." *Computer II* at 420. Enhanced service, on the other hand, refers to

> services, offered over common carrier transmission facilities used in interstate communications, which employ computer processing applications that act on the format, content, code, protocol or similar aspects of the subscriber's transmitted information; provide the subscriber additional, different, or restructured information; or involve subscriber interaction with stored information.

Id.; see also 47 C.F.R. § 64.702. Basic services were to be offered under tariff, according to *Computer II*, while enhanced services were unregulated. In the *Communications Protocols* decision, the Commission noted that there is a continuum between services that are clearly basic, such as "transmission with no changes in ... electrical signals," and clearly enhanced services, such as "creation, deletion, and alteration of information." *Communications Protocols under Section 64.702 of the Commission's Rules and Regulations*, 55 RR 2d 104, 95 FCC 2d 584, para. 3 (1983). In *Computer II,* the Commission emphasized that:

> the carrier's basic transmission network is not to be used as an information storage system. Thus, in a basic service, once information is given to the communications facility, its progress towards the destination is subject only to those delays caused by congestion within the network or transmission priorities given by the originator.

Computer II at para 95.

The purpose of these categories was to ensure that the "licensed transmission facilities of a carrier are equally available to all providers of enhanced services," to minimize "the potential for a carrier to use its transmission facilities to improperly subsidize an enhanced data processing service without detection," and to benefit consumers by "enabling resale entities to custom-tailor services to individual user needs. *Id.* at para 87. Thus, the goal of the Commission in creating the categories was to enhance competition and foster increased technological development in the computer industry by keeping it free from regulation. Concern about regulation of enhanced services extended to regulation by state governments. *Computer II* at para 7. *See also Amendment to Sections 64.702 of the Commission's Rules and Regulations* (Third Computer Inquiry), 62 RR 2d 1662, 2 FCC Rcd 3072, at paras 18, 46 (1987) ("*Computer III*").

The heart of the Commission's concern was that large carriers might abuse their control over potential bottleneck transmission facilities. *See e.g., Computer III*, 2 FCC Rcd at 3077, 3111 n. 25, 3112 n. 62; *see also, Frame Relay* at para 42. Under the "contamination theory," a service that bundled both basic and enhanced services remains unregulated as long as the basic services are not using transmission facilities over which the service provider might have market power and restrict supply.

The relevant terms for the purpose of the Universal Service discussion are "information" and "telecommunications" as defined by Congress in the Telecommunications Act of 1996 rather than "enhanced" and "basic" services. For the purpose of this paper, however, we are relying on the Commission's characterization of "information services" as a broader category than "enhanced services." *Implementation of the Non-Accounting Safeguards of Sections 271 and 272 of the Communications Act of 1934,*5 CR 696, 11 FCC Rcd 21905, at para. 103 (1996).

Since establishing the basic/enhanced dichotomy, the Commission generally has reviewed technology on a case-by-case basis to determine its classification. Since *Computer II*, protocol processing has generally been considered an enhanced service. While the Commission did permit AT&T to offer transmission of data over a packet-switched network following X.25 protocols as a "basic service," it emphasized that it was applying the definitions in *Computer II* "in a flexible manner so as to ensure that the transitional introduction of new technology in basic services is not inhibited." *Application of AT&T For Authority under Section 214 of the Communications Act of 1934, as amended, to Install and Operate Packet Switches at Specified Telephone Company Locations in the United States,* 94 FCC 2d 48, at para. 5 (1983). When protocol conversion services are offered, those services have generally been held to be enhanced. *Petitions for Waiver of Section 64.702 of the Commission's Rules by Pacific Bell et. al.,* 58 RR 2d 1664, 100 FCC 2d 1057 (1985). In 1985 the Commission noted that "packet switching is

heading rapidly towards integration with facilities for conventional telephone service," and suggested that when the integration occurred, new regulatory approaches might be warranted. *Petitions for Waiver of Section 64.702 of the Commission's Rules by Pacific Bell et. al.*, 58 RR 2d 1664, 100 FCC 2d 1057 (1985) at para 77. In *Computer III*, the Commission rejected a proposed shift in its definition of enhanced services that would have included a "change in content" test, but rather decided to continue to label protocol conversion as an enhanced service. *Computer III*, at para. 68.

In the *Frame Relay* case, the Commission was faced with the proposal of AT&T to offer a service that combined the transmission of data over a frame relay network, and the conversion of protocols. *Independent Data Communications Manufacturers Association and AT&T Petition*, 1 CR 409, 10 FCC Rcd 13717 (1995) ("*Frame Relay*"). The Commission concluded that AT&T's proposed service, which included accepting data with protocol information already attached by the customer, and merely transported that data across its frame relay network, the offering should be considered a basic service. *Id.* at para. 35. On the other hand, protocol conversion is, as it has always been, an enhanced service, and thus the Commission required AT&T to unbundle the two services. *Id.* at para 22. The basic frame relay service was to be offered on a common carrier basis under tariff, while the protocol conversion itself was an unregulated enhanced service. *Id.*

In the *Sections 271 and 272* case, the Commission soundly rejected the notion that the term "information service," a roughly equivalent term, only refers to a net conversion of content between one end of the transmission and the other. *Implementation of the Non-Accounting Safeguards of Sections 271 and 272 of the Communications Act of 1934, as Amended,* 5 CR 696, 11 FCC Rcd 21905, at para. 104 (1996). The Commission stated that "information services" do not merely refer to "services that transform or process the content of the information transmitted by the end-user," but rather that "the statutory definition makes no reference to the term 'content,' but requires only that an information service transform or process 'information.'" *Sections 271 and 272*, at para. 104. Therefore, even if the message received has the same meaning to the end user as was intended by the sender, the underlying process could still be considered an information service, so long as the data is processed in some fashion between the sender and receiver.

While the Commission might need to conduct a more thorough review of the technology before it could make any decisions on the issue, it is apparent that IP voice services are "enhanced." Internet service providers, including Internet voice service providers, process data, convert it from one form to another, add protocol information, process protocols, and perform a myriad of other tasks that constitute an enhanced service. As such, IP services, including IP voice services, fit within the definition of enhanced service established by the Commission and upheld on numerous occasions. It is clearly not "pure transmission capability" nor "transparent in terms of its interaction with customer-supplied information." The processing performed on voice transmissions carried over the Internet is qualitatively different from that of conventional switched voice systems and from common carrier data transmission services that have been held to be "basic" services.

First, the suppression and compression used to enhance the efficiency of the system is sufficient to deem the system enhanced. *Computer II* included "bandwidth compression techniques" among the list of techniques that do not constitute an enhanced service (*Computer II* at para. 19), but there is a significant difference between the bandwidth compression techniques employed in 1980 and the more complex process currently used in voice over IP. The suppression and compression techniques commonly used in the voice over IP industry include the detection of whether or not the signal contains voice sound, and only transmitting only those portions it determines to be voice. It is important that these programs are not merely deleting silence, but are deleting non-voice sounds that may have been transmitted across the channel in a conventional voice system. Thus, the system is actually interacting with the information in the incoming data stream, analyzing its content, and deleting portions that it determines to be unnecessary. This advanced process does "employ computer processing applications that act on the ... content ... of the subscriber's transmitted information." See *Computer II* definition at 420. Such a process also involves a "deletion" of information, which, according to the *Communication Protocols* case, makes it a clearly enhanced service. *Communications Protocols* at para 3.

Second, as with all of IP, the packetization and adding of protocols makes this an enhanced service. As noted above, the Commission has generally held such protocol processing to be an enhanced service. *See, e.g., Computer* II at para. 99; *Communications Protocols under Section 64.702 of the Commission's Rules and Regulations,* 55 RR 2d 104, 95 FCC 2d 584, at para 3 (1983). In cases in which data transmission systems have been held basic services, such as that in the *Frame Relay* case, the service was generally offered by a facilities-based common carrier that did not add or remove the control information, but merely used it to route data through the network. In those services, the customer generally created the protocol headers and trailers, gave them to the common carrier for transmission across its proprietary lines, and removed them at the end. In IP voice services, the service provider, generally not a facilities-based provider, is packetizing the data and adding protocol data, then releasing it for transmission. Thus, the IP voice service provider is involved in the addition, deletion, and processing of information in a manner not done by AT&T in the *Frame Relay* case.

Third, IP voice services employ storage of data. At the transmission end, data is stored during the transmitter recording process, and again briefly during the encoding and compression processes. Incoming data at the receiver's end is stored for a period of time in a jitter buffer. The purpose of this storage is to properly order the information and wait for late-arriving packets. This storage of data is not caused by the congestion of the network or transmission priorities of the originator.

Fourth, the voice reconstruction that occurs to compensate for lost packets and transmission errors in a voice over IP system makes it enhanced. While the *Computer II* definition of basic service included "error control techniques," there is a qualitative difference between the simple error control techniques used over the switched network and the systems used by Internet voice systems to enhance the delivery of voice over the IP network. In conventional error correction techniques, such as those envisioned by the *Computer II* definition, include checking incoming blocks of data for errors, and requesting the retransmission of any

that contain errors. Thus, in conventional error control techniques, the message that is finally delivered to the user is exactly the same as the message that originated, even if some errors resulted during the original attempt to transmit the data. The typical IP voice error detection and correction system is quite different in that it uses retrieval of stored data and creation of new data to enhance the communication. As described above, this process of error correction not only processes and transforms the information, it also retrieves stored information and adds new content that did not exist in the original. The sound heard by the receiver is not exactly the sound transmitted, but rather portions of it have been created by the system to enhance the delivered sound. Thus, in the words of the *Protocols* decision, this is a "creation" of information.

The distinction between basic and enhanced services was originally whether the carrier offered a simple, pure, transparent communications path, or whether the provider used computer processes to add value. The focus of the distinction should be on whether the system adds value, not in a simplistic comparison of whether the format of the message is the same from the sender's perspective as the receiver's perspective. IP voice systems add value--by increasing efficiency and by providing a capability for integrating voice services with other forms of data--and therefore they should be considered enhanced, or "value added," services.

One of the key characteristics of enhanced services is that they combine basic transmission services and computer processing in a way that is often difficult or impossible to distinguish. That is the case for IP voice services, even if one were to regard simple handset-to-handset service through a gateway as a basic service. Particularly for the service provider operating the terminating gateway, it will often be impossible to determine if the packets it is receiving were transmitted by a gateway or a personal computer, and absent a regulatory requirement there would be no reason for the gateway operator to try to differentiate between the two.

The goals sought by the creation of the "enhanced service" category would be furthered by the inclusion of IP voice services in the category. The classification of service providers that offer access to the IP networks using transmission facilities that are generally available for lease poses no threat of improper cross-subsidization or market influence. On the contrary, as the Commission sought to promote when it established the category, the classification of IP networks as enhanced services would protect against unnecessary regulation, increase competition, and encourage the development of new technologies.

Access Charges. IP voice service providers should not be forced into the current regime for interstate access charges. The predominant use of IP voice--for international traffic--typically results in paying the same interstate access charges as is being paid by other entities that are providing international voice communications using the PSTN. To the extent that the current regime contains implicit subsidies to reduce the cost of local service, IP voice service providers will not carry sufficient traffic in the near future to undermine that aspect of Universal Service support, certainly before the regime is changed to make access cost-based. As discussed above, the myth that IP voice is a form of access-charge bypass is just that--a myth. No rational service provider deploy gateways as a means of access-charge arbitrage and none appear to be doing so

today. Perhaps more to the point, it would be unfair to require IP voice service providers to pay for a form of access (circuit-switched) that includes many elements that they do not need and does not provide the form of local connection (packet-switched) that in fact they do need.

As discussed above, almost all IP voice traffic today that uses the PSTN and involves a per-minute charge to the subscriber is international traffic that predominantly uses toll-free 800 numbers for calls originating in the U.S. through a gateway and similar interexchange facilities for the termination of calls into the U.S. through a gateway. For this traffic, therefore, the service generates the same access charge revenue as would be generated if the traffic was handled more conventionally.

To the extent that the traffic is sufficient to aggregate it at and use local business or PRI lines, the service provider still pays for the use of the local PSTN, particularly for termination of traffic, which almost always involves a significant per-minute charge. It is generally understood that these business lines (particularly PRI lines) are priced above cost. (With access-charge reform, the cost of terminating a call on local business lines increasingly exceeds the cost of termination using feature group access, where much of the reform is to focus. It is completely conceivable then that IP voice service providers will locate their gateways in only a few key locations in a region and continue predominantly to use interexchange facilities to originate and terminate traffic.) Moreover, as end users, IP voice service providers pay multi-line Subscriber Line Charges on their business lines and at least indirectly pay Primary Interexchange Carrier Charges.

The current Part 69 access charge system unfairly requires IP voice service providers to pay for features and functions of the local exchange that they do not need. These unnecessary rate elements include: Access Tandem, Tandem Transport, Local Switching, and PICCs. IP voice service providers would not need switching and transport services if the local exchange network was capable of identifying IP traffic prior to the call being delivered to the switch. IP voice service providers also do not need equal access (1+ dialing) or trunk side signaling. Historically, the Commission has appreciated that the kind of tandem dialing that is required to use public IP voice services justifies paying for less expensive access. The current model also mandates that the access purchaser acquire services in a minimum 64 kbps channel without giving the purchaser the ability to maximize the use of that channel.

IP voice service providers would prefer, rather than leasing local PSTN lines, to be able to lease the type of packet-switched routing and transport that would permit them to provide an optimal service. In practice, this access could be provided by the local exchange carrier through newer, more efficient transport technologies such as a Metropolitan Area Network. The MAN would not need a loop from every customer location to the central office, as a circuit-switched network requires. The customer's unique IP address can be used to direct voice, data, video or any other manner of communication to the appropriate destination.

To encourage the development of MANs that facilitate the deployment of IP networks, incumbent local exchange carriers should be encouraging IP voice service providers to use trunk side access arrangements (such as T-1 based ISDN primary rate interface service). At present,

however, use of these services is deterred because Digital T-1 lines and other trunk-side connections are only offered at premium rates. For example, a hunt group of 24 analog voice lines is priced as much as 50 percent less than equivalent trunk side connection.

The Commission should also require incumbent local exchange carriers to offer Part 69 access elements on an unbundled basis. IP voice service providers could purchase loop sub-elements that would permit the local exchange carrier to identify data traffic, packetize it at the end office and transmit it to the IP voice service provider in a data-friendly packet environment. Such an arrangement would eliminate the need for current local switching or transport elements. If the incumbent local exchange carriers offered unbundled loop sub-elements, data-friendly technologies could be deployed by competing service providers. (Traditional Internet Service Providers have taken a similar position in response to complaints by local exchange carriers that web-browsing is causing congestion at the local PSTN. In the case of IP voice services, however, congestion is not even an issue, since users of IP voice services do not typically spend the hours at a time "on line" that is characteristic of web-browsing.)

To further promote the development of data-friendly local networks, the Commission also should require equal access and interconnection for competitive packet services. Packet service providers should have competitively neutral access to data traffic originating on the incumbent local exchange carrier's network. The Commission should also revise its collocation rules to eliminate unnecessary restrictions.

*****

The VON Coalition is an association of companies that are developing voice-related products and services that use IP networks. This White Paper is supported by, among others, Delta Three, Dialogic, Inter-tel, ITXC, Lucent, Microsoft, Netspeak, PACE Communications, pulver.com, Vienna Systems, and Vocaltec.

PC-to-IPN

Through Dial-up ISP

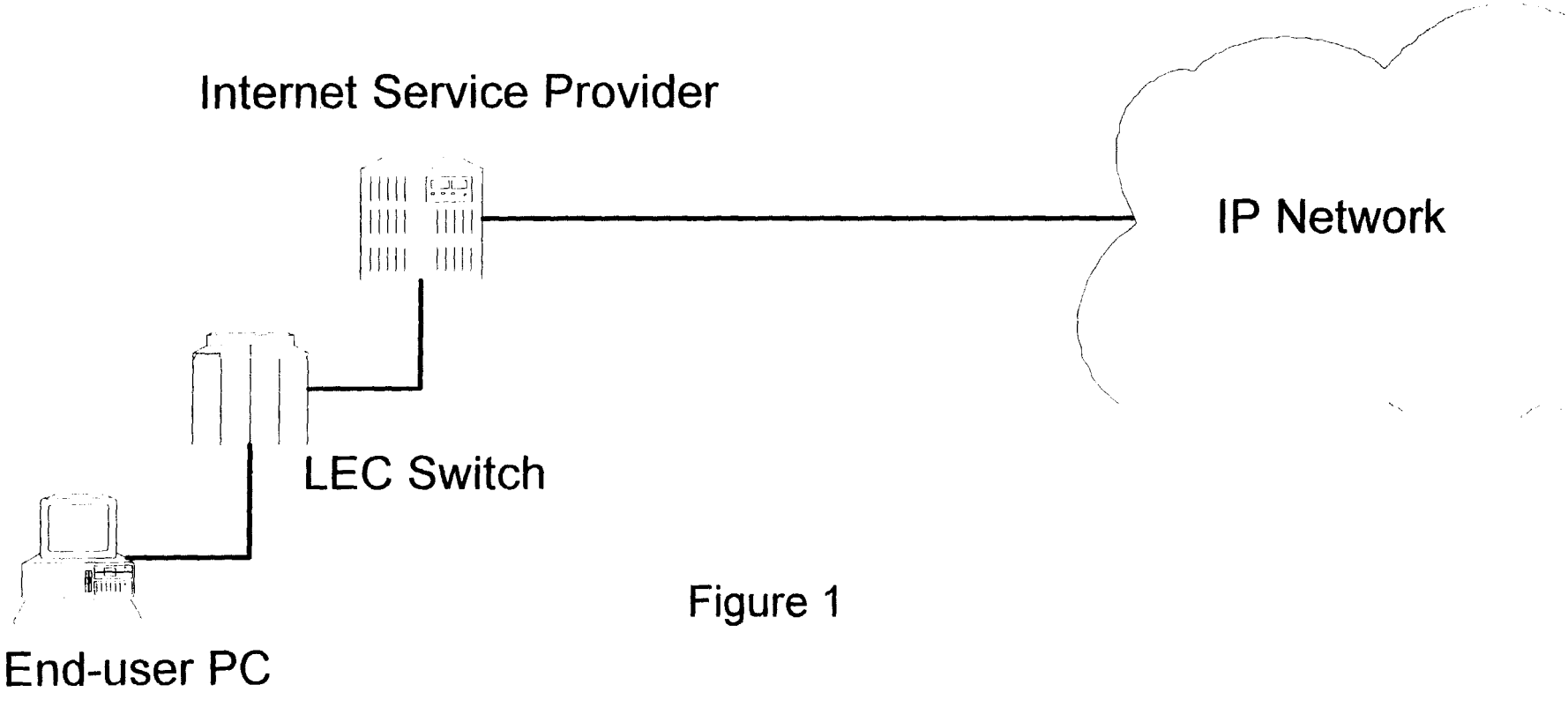

Figure 1

Handset-to-IPN

Via PBX/Gateway

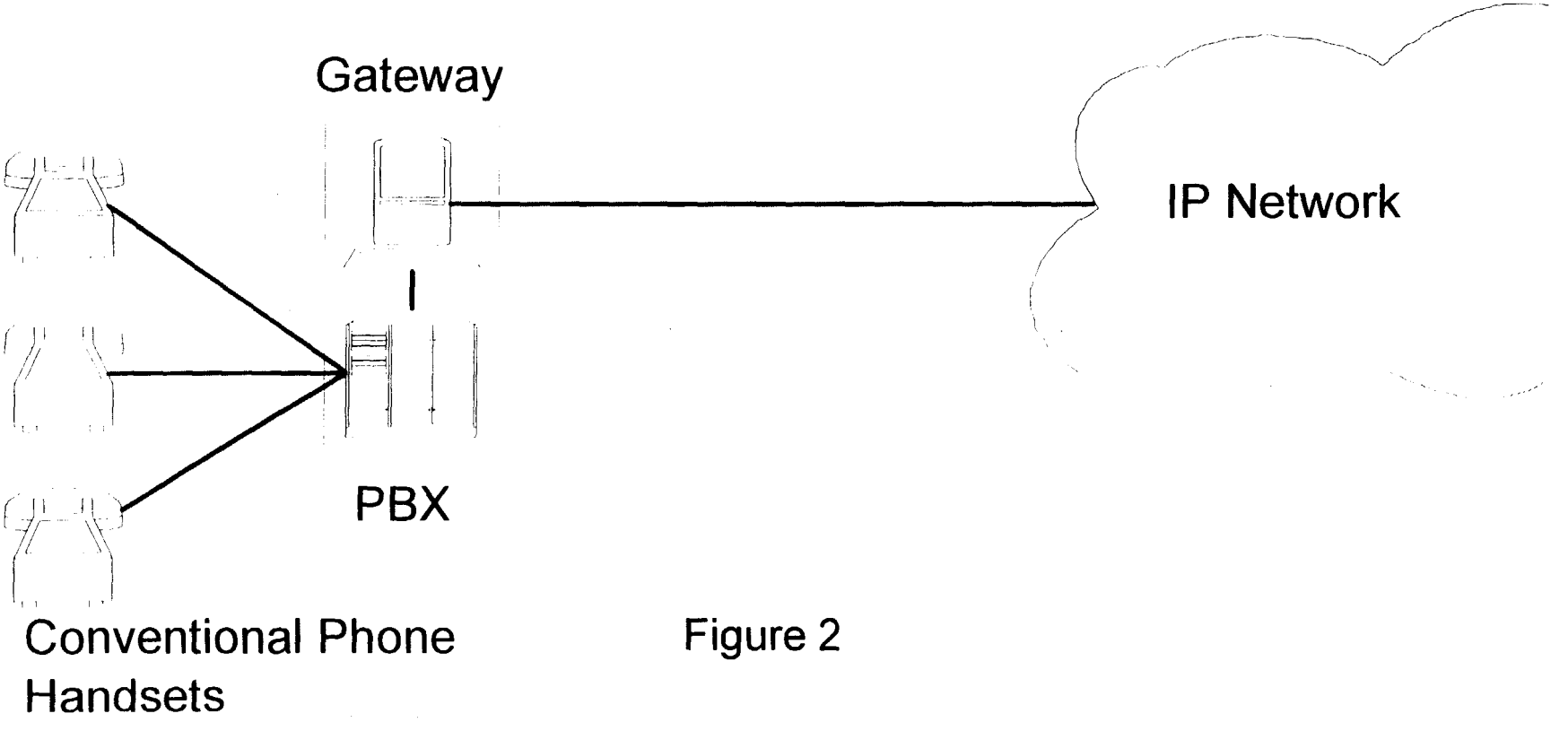

Figure 2

Phone-to-IPN

By Dial-up IPVSP

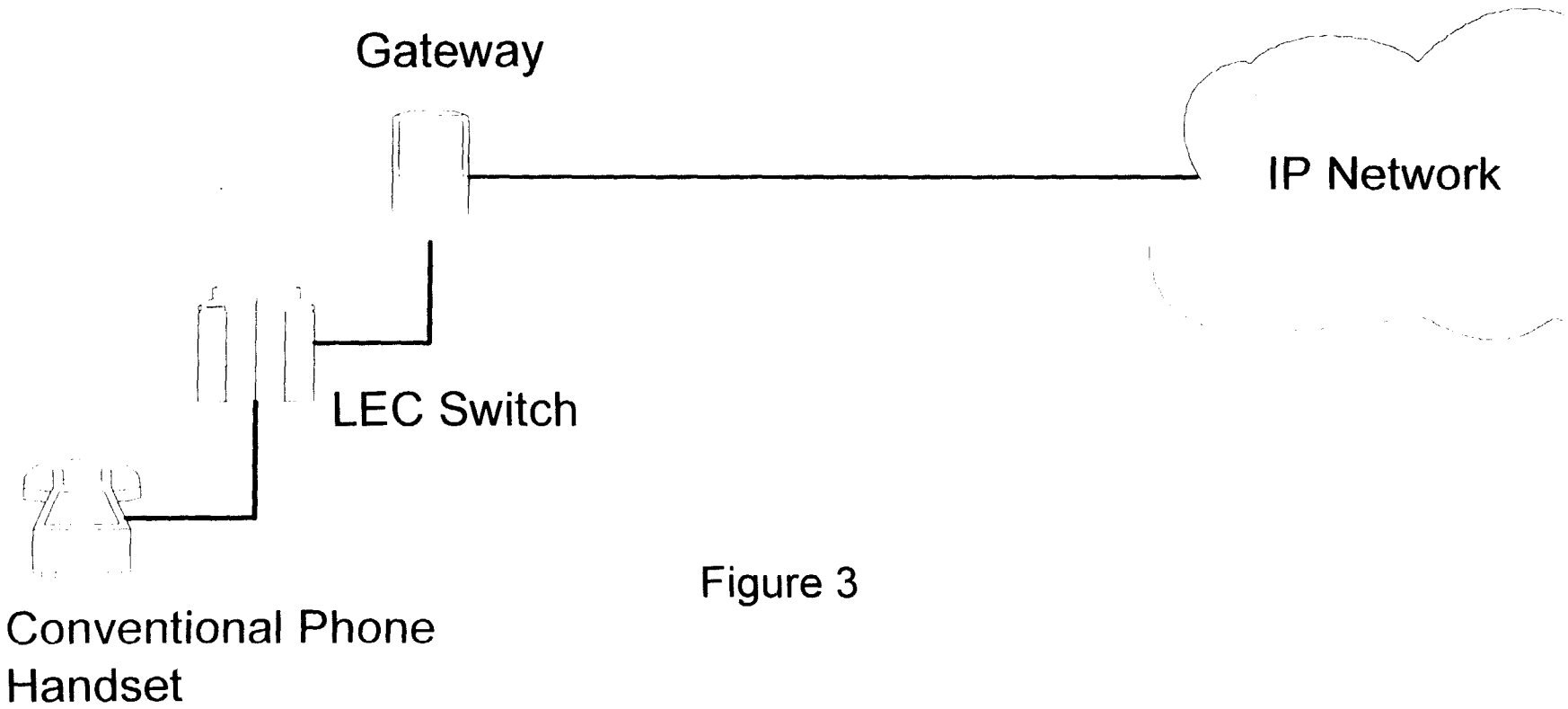

Figure 3

Hybrid Appliance-to-IPN

By Dial-up IPVSP

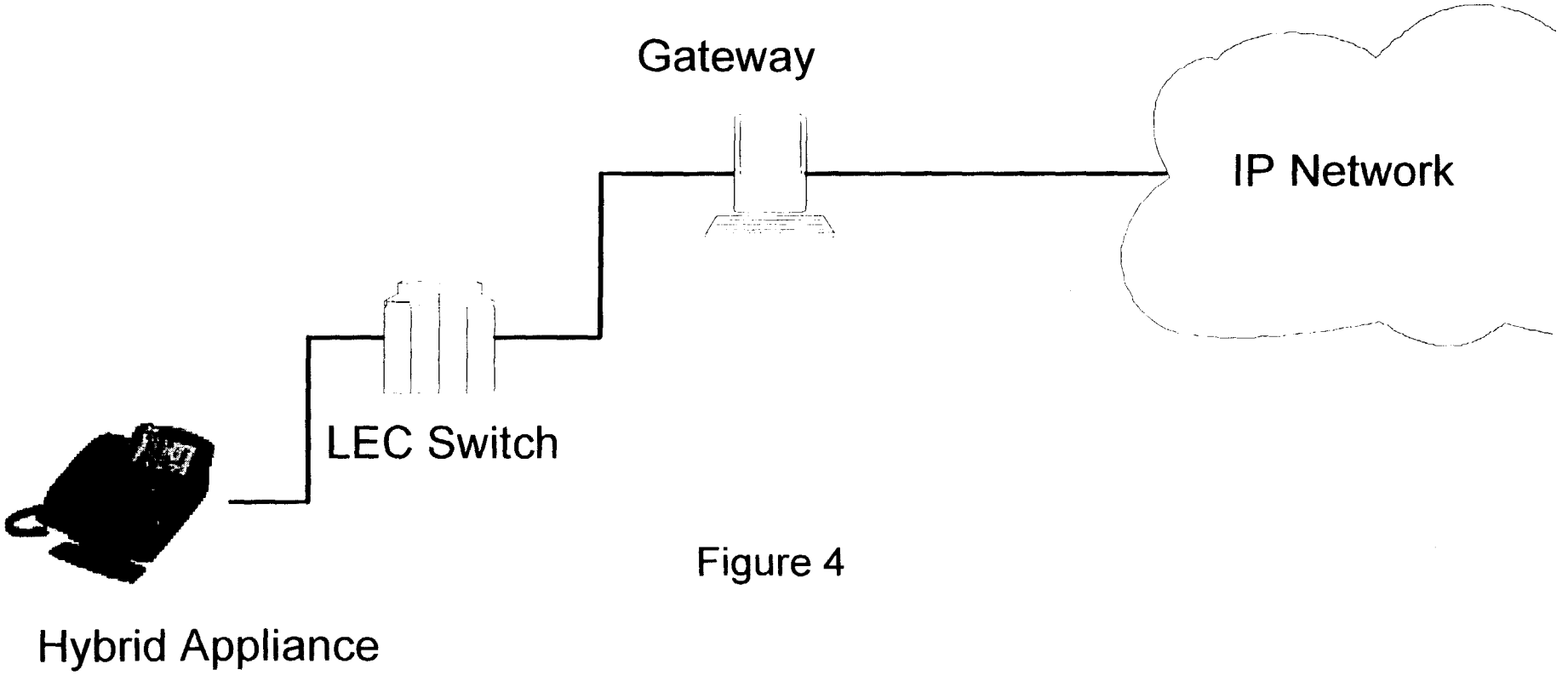

Figure 4

The Future

IP Dedicated Connections

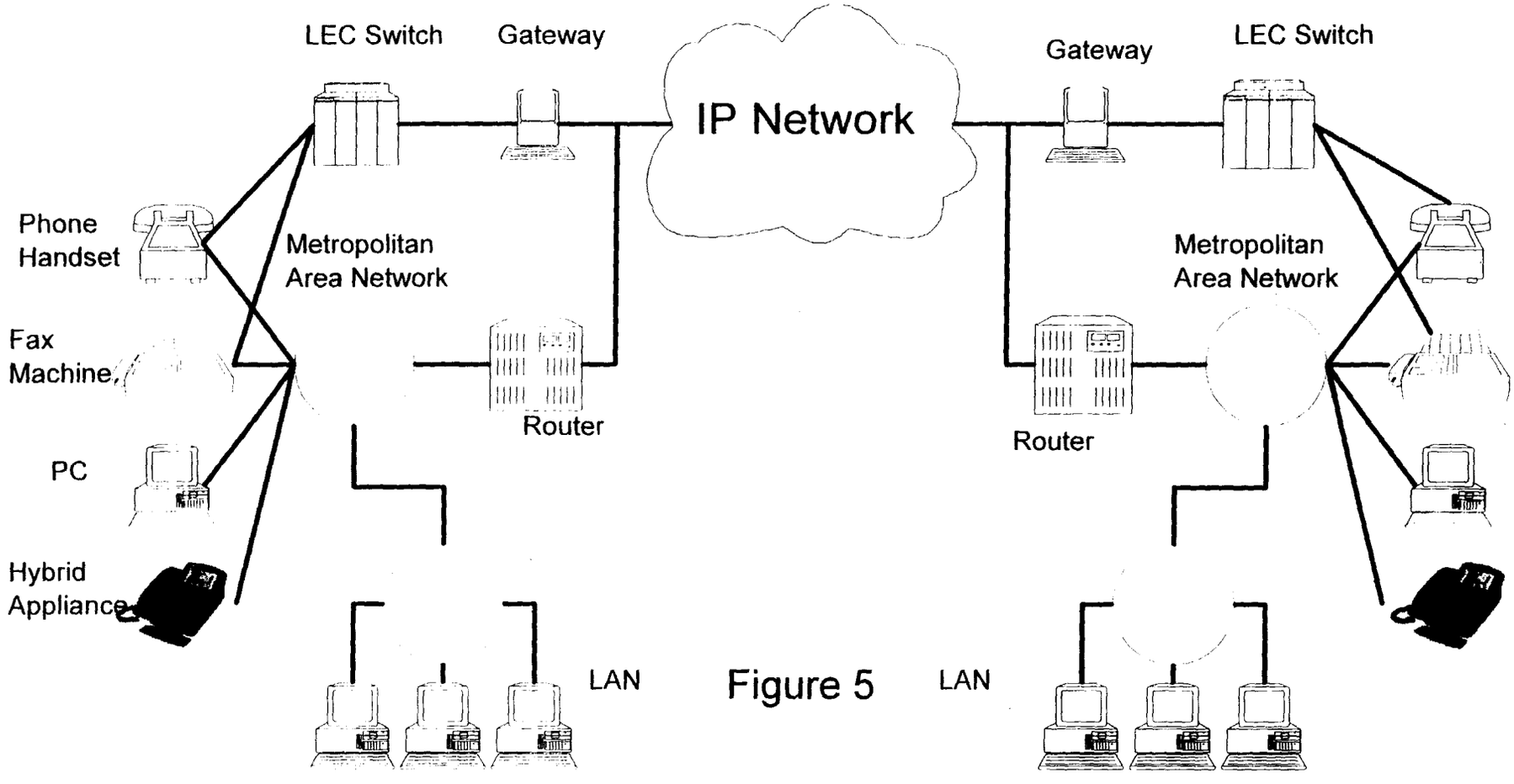

Figure 5