DOCKET FILE COPY ORIGINAL

ADVANCED TELEVISION SYSTEMS COMMITTEE

Robert K. Graves
Chairman

EX PARTE OR LATE FILED

RECEIVED

MAR 25 1998

FEDERAL COMMUNICATIONS COMMISSION
OFFICE OF THE SECRETARY

March 25, 1998

Ms. Magalie Roman Salas
Secretary
Federal Communications Commission
1919 M. Street, NW, Room 222
Washington, DC 20554

Re: MM Docket No. 87-268

Dear Ms. Salas:

In its Sixth Report and Order released April 21, 1997 in the Commission's Advanced Television proceeding, referenced above, the Commission indicated its desire to seek input on the issue of DTV frequency labeling from an inter-industry committee encompassing broadcasters, equipment manufacturers, cable operators, and the public (see Paragraph 166-170). The Advanced Television Systems Committee (ATSC), which is just such an organization, undertook this work.

On July 18, 1997 the ATSC filed comments with the Commission in which we described the work then under way within the ATSC Specialist Group on Transport Systems Documentation (T3/S8) on the issue of Naming, Numbering and Navigating (N^3) with respect to the digital television channels. That work has now been completed and has resulted in the adoption, on December 22, 1997, of ATSC Standard A/65, "Program and System Information Protocol for Terrestrial Broadcast and Cable" (PSIP).

By this letter we officially transmit this PSIP Standard (A/65) to the Commission. We recommend that the Commission acknowledge this Standard as a member of the ATSC ensemble of DTV Standards, and recognize that its voluntary use by terrestrial broadcasters and cable TV systems will satisfy the requirements for labeling DTV channels and services.

We believe that this Standard provides a unified solution that satisfies the relevant requirements of terrestrial broadcasters, cable TV operators, consumer electronics manufacturers and consumers. Among its many features are the following:

- Preserves channel-number branding for existing NTSC broadcasters
- Supports direct access to any channel or service

No. of Copies rec'd 0+2
List ABCDE

1750 K Street NW, Suite 800, Washington DC 20006 ◆ http://www.atsc.org
TEL 202-828-3130 ◆ FAX 202-828-3131 ◆ rgraves@atsc.org

- Harmonizes channel selection between terrestrial broadcast and cable TV
- Provides compatibility between printed and electronic program guides
- Provides for carriage of content advisory data
- Provides for carriage of index information for closed captions
- Supports a variety of user-friendly navigation paradigms
- Allows grouping of digital and analog services
- Supports broadcasting of data and other services over the DTV channel

The PSIP standard defines a two-part channel number made up of a major channel number and a minor channel number. The major channel number identifies the broadcaster and the minor channel number defines the specific service. Each broadcaster continuously transmits its major and minor channel numbers and related program information. This allows the receiver to build a virtual channel table and on-screen program guide for those broadcasts that it can receive. Although the major channel numbers are no longer tied directly to the television station's assigned DTV frequency, they must not be duplicated within a market. The minor channel numbers may be assigned as desired by the individual broadcaster, except for minor channel number "0", which is used to designate the broadcaster's analog NTSC service.

Although we believe that this Standard (A/65) should be a voluntary industry standard as opposed to being embodied in the Commission's rules, we believe that the following specific actions by the Commission are required:

- For broadcasters with existing NTSC licenses, assign the current NTSC channel number as the major channel number.
- For new broadcasters without existing NTSC licenses, assign the DTV station's RF channel number as the major channel number.
- Assign a unique 16-bit MPEG Transport Stream Identifier (TSID) to each digital television station licensee.
- Coordinate assignments of major channel numbers and TSIDs with those assigned in Canada and Mexico.

The first two actions will assign major channel numbers between 2 and 69 to all digital television stations in a manner which guarantees no duplication within a market, and which allows existing NTSC licensees to retain their present channel number. In the future, new DTV assignments may need to be made on RF channels reclaimed from NTSC licensees. In such cases, the major channel number cannot correspond to the RF channel number, since it will already be in use.

We note that major channel numbers 1, and 70 through 99 are available for other uses, but any such use would require coordination within each market and with adjacent markets to avoid conflicts.

With respect to assignment of the 16-bit TSIDs, we recommend that the Commission consider pairing TSIDs by assigning only odd numbers (in which the least significant bit is always equal to "1") so that stations choosing to include a 16-bit Transmission Signal Identifier

in their NTSC signal in accordance with EIA Standard EIA-752 can use the adjacent even number (least significant bit equal to "0").

Any inquiries regarding the PSIP Standard should be addressed to Mr. Craig Tanner, Executive Director of the ATSC.

Sincerely,

Robert Graves /CK

Attachment

cc: Bruce Franca, Office of Engineering and Technology
Richard Smith, Office of Engineering and Technology
Roy Stewart, Mass Media Bureau

Doc. A/65
23 Dec 1997

PROGRAM AND SYSTEM INFORMATION PROTOCOL FOR TERRESTRIAL BROADCAST AND CABLE

ADVANCED TELEVISION SYSTEMS COMMITTEE

Blank Page

PROGRAM AND SYSTEM INFORMATION PROTOCOL FOR TERRESTRIAL BROADCAST AND CABLE

ATSC STANDARD

Table of Contents

1. SCOPE 1

1.1 Purpose 1

1.2 Application 1

1.2.1 Terrestrial Broadcast 1

1.2.2 Cable 2

1.3 Organization 2

2. REFERENCES 4

3. DEFINITIONS 5

3.1 Compliance Notation 5

3.2 Acronyms and Abbreviations 5

3.3 Definition of Terms 6

3.4 Section and Data Structure Syntax Notation 7

4. DATA STRUCTURE 8

4.1 Table Format 8

4.2 Table ID Ranges and Values 9

4.3 Extensibility 9

4.4 Reserved Fields 10

5. TABLE HIERARCHY AND STRUCTURE REQUIREMENTS 11

5.1 Requirements for terrestrial broadcast 13

5.2 Requirements for cable 13

6. SPECIFICATIONS 14

6.1 System Time Table (STT) 14

6.2 Master Guide Table (MGT) 15

6.3 Virtual Channel Table (VCT) 18

6.3.1 Terrestrial Virtual Channel Table 19

6.3.2 Cable Virtual Channel Table 24

6.4 Rating Region Table (RRT) 27

6.5 Event Information Table (EIT) 30

6.6 Extended Text Table 33

6.7 Core Descriptors 35

6.7.1 AC-3 Audio Descriptor 36
6.7.2 Program Identifier Descriptor 36
6.7.3 Caption Service Descriptor 36
6.7.4 Content Advisory Descriptor 37
6.7.5 Extended Channel Name Descriptor 39
6.7.6 Service Location Descriptor 39
6.7.7 Time-Shifted Service Descriptor 41
6.7.8 Component Name Descriptor 41
6.7.9 Stuffing Descriptor 42

6.8 Multiple String Structure 42

7. PSIP STD MODEL 45

7.1 Buffer Model for Terrestrial Broadcast 45

7.2 Buffer Model for Cable 45

ANNEX A DAYLIGHT SAVINGS TIME CONTROL 46

ANNEX B ASSIGNMENT OF MAJOR CHANNEL NUMBER VALUES FOR TERRESTRIAL BROADCAST IN THE U.S. 48

ANNEX C STANDARD HUFFMAN TABLES FOR TEXT COMPRESSION. 49

ANNEX D AN OVERVIEW OF PSIP FOR TERRESTRIAL BROADCAST WITH APPLICATION EXAMPLES 69

ANNEX E TYPICAL SIZES OF PSIP TABLES 84

ANNEX F AN OVERVIEW OF HUFFMAN-BASED TEXT COMPRESSION 88

PROGRAM AND SYSTEM INFORMATION PROTOCOL FOR TERRESTRIAL BROADCAST AND CABLE

ATSC STANDARD

1. SCOPE

1.1 Purpose

This document defines a Standard for System Information (SI) and Program Guide (PG) data compatible with digital multiplex bit streams constructed in accordance with ISO/IEC 13818-1 (MPEG-2 Systems). The document defines the standard protocol for transmission of the relevant data tables contained within packets carried in the Transport Stream multiplex. The protocol defined herein will be referred to as **Program and System Information Protocol (PSIP).** Prior to being approved as an ATSC Standard, this document was designated T3/S8-193 and later, after approval by T3, as Doc. T3-442.

This standard was prepared by the Advanced Television Systems Committee (ATSC) Technology Group on Distribution (T3). The document was approved by T3 on 22 October 1997 for submission by letter ballot to the membership of the full ATSC. The document was approved by the members of the ATSC on 23 December 1997.

For an informative description of the purpose, concepts, and tables defined in this protocol, first time readers are encouraged to start with Annex D.

1.2 Application

This document describes tables that shall be applicable to terrestrial (over-the-air) and cable signals. Some PSIP tables apply to terrestrial broadcast, some apply to cable, and others apply to both.

1.2.1 Terrestrial Broadcast

The following PSIP data shall be included in all ATSC-compliant Transport Streams to be transmitted via terrestrial broadcast:

NOTE: The user's attention is called to the possibility that compliance with this standard may require use of an invention covered by patent rights. By publication of this standard, no position is taken with respect to the validity of this claim, or of any patent rights in connection therewith. The patent holder has, however, filed a statement of willingness to grant a license under these rights on reasonable and nondiscriminatory terms and conditions to applicants desiring to obtain such a license. Details may be obtained from the publisher.

- The Terrestrial Virtual Channel Table (TVCT) defining, at a minimum, MPEG-2 programs embedded in the Transport Stream in which the TVCT is carried.
- The Master Guide Table (MGT) defining the type, packet identifiers, and versions for all the other PSIP tables in this Transport Stream, except for the System Time Table (STT).
- The Rating Region Table (RRT) defining the TV parental guideline system referenced by any content advisory descriptor carried within the Transport Stream.
- The System Time Table (STT), defining the current date and time of day.
- A service_location_descriptor for each digital virtual channel in the VCT.
- The first four Event Information Tables (EIT-0, EIT-1, EIT-2 and EIT-3) describing 12 hours of events (TV programs), each with a coverage of 3 hours, and including all of the virtual channels listed in the TVCT.

1.2.2 Cable

The following PSIP data shall be included in all ATSC-compliant Transport Streams to be transmitted via cable:

- The Cable Virtual Channel Table (CVCT) defining, at a minimum, the virtual channel structure for the collection of MPEG-2 programs embedded in the Transport Stream in which the CVCT is carried.
- The Master Guide Table (MGT) defining the type, packet identifiers, and versions for all of the other PSIP tables included in this Transport Stream except for the System Time Table (STT).
- The Rating Region Table (RRT) defining the TV parental guideline system referenced by any content advisory descriptor carried within the Transport Stream.
- The System Time Table (STT), defining the current date and time of day.

1.3 Organization

The sections of this document are organized as follows:

- **Section 1** — Provides this general introduction.
- **Section 2** — Lists references and applicable documents.
- **Section 3** — Provides a definition of terms and a list of acronyms and abbreviations used in this document.
- **Section 4** — Describes the data structure of the PSIP tables.
- **Section 5** — Describes the overall table hierarchy.
- **Section 6** — Describes formats for all of the PSIP tables.
- **Section 7** — Describes PSIP STD model.

- **Annex A**— Describes the daylight savings time control.
- **Annex B** — Describes the assignment of major_channel_number values for terrestrial broadcast in the U.S.
- **Annex C** — Describes the standard Huffman tables for text compression.
- **Annex D** — Provides an overview of PSIP for terrestrial broadcast with application examples.
- **Annex E** — Describes the typical sizes of PSIP tables.
- **Annex F** — Provides an overview of Huffman-based text compression.

2. REFERENCES

The following documents are applicable to this Standard:

1. ATSC Standard A/52 (1995), Digital Audio Compression (AC-3) (*normative*).
2. ATSC Standard A/53 (1995), ATSC Digital Television Standard (*normative*).
3. ATSC Standard A/55 (1996), Program Guide for Digital Television (*informative*).
4. ATSC Standard A/56 (1996), System Information for Digital Television (*informative*).
5. ATSC Standard A/57 (1996), Program/Episode/Version Identification (*normative*).
6. ISO 639, Code for the Representation of Names of Languages, 1988 (*informative*).
7. ISO CD 639.2, Code for the Representation of Names of Languages: alpha-3 code, Committee Draft, dated December 1994 (*normative*).
8. ISO/IEC 10646-1:1993, Information technology — Universal Multiple-Octet Coded Character Set (UCS) — Part 1: Architecture and Basic Multilingual Plane (*normative*).
9. ISO/IEC 8859, Information Processing — 8-bit Single-Octet Coded Character Sets, Parts 1 through 10 (*normative*).
10. ITU-T Rec. H.222.0 | ISO/IEC 13818-1:1996, Information Technology — Generic coding of moving pictures and associated audio — Part 1: Systems (*normative*).
11. ITU-T Rec. H.262 | ISO/IEC 13818-2:1996, Information Technology — Generic coding of moving pictures and associated audio — Part 2: Video (*normative*).
12. Digital Video Transmission Standard for Cable Television, SCTE DVS-031, Rev. 2, 29 May 1997 (*informative*).
13. EIA 708 *Specification for Advanced Television Closed Captioning (ATVCC)*, Electronic Industry Association.
14. EIA 752 *Specification for Transport of Transmission Signal Identifier (TSID) Using Extended Data Service)*, Electronic Industry Association.

3. DEFINITIONS

3.1 Compliance Notation

As used in this document, *"shall"* or *"will"* denotes a mandatory provision of the standard. *"Should"* denotes a provision that is recommended but not mandatory. *"May"* denotes a feature whose presence does not preclude compliance, that may or may not be present at the option of the implementer.

3.2 Acronyms and Abbreviations

The following acronyms and abbreviations are used within this specification:

ATSC	Advanced Television Systems Committee
bslbf	bit serial, leftmost bit first
CAT	Conditional Access Table
CRC	Cyclic Redundancy Check
CVCT	Cable Virtual Channel Table
DTV	Digital Television
EPG	Electronic Program Guide
EIT	Event Information Table
ETM	Extended Text Message
ETT	Extended Text Table
GA	Grand Alliance
GPS	Global Positioning System
PSIP	Program and System Information Protocol
MGT	Master Guide Table
MPAA	Motion Picture Association of America
MPEG	Moving Picture Experts Group
NVOD	Near Video On Demand
PAT	Program Association Table
PCR	Program Clock Reference
PES	Packetized Elementary Stream
PID	Packet Identifier
PMT	Program Map Table
PTC	Physical Transmission Channel
SCTE	Society of Cable Telecommunications Engineers
SI	System Information
STD	System Target Decoder
STT	System Time Table
rpchof	remainder polynomial coefficients, highest order first
RRT	Rating Region Table
TS	Transport Stream

TVCT	Terrestrial Virtual Channel Table
UTC	Coordinated Universal Time[1]
uimsbf	unsigned integer, most significant bit first
VCT	Virtual Channel Table. Used in reference to either TVCT or CVCT.
unicode	Unicode™

3.3 Definition of Terms

The following terms are used throughout this document:

descriptor: A data structure of the format: descriptor_tag, descriptor_length, and a variable amount of data. The tag and length fields are each 8 bits. The length specifies the length of data that begins immediately following the descriptor_length field itself. A descriptor whose descriptor_tag identifies a type not recognized by a particular decoder shall be ignored by that decoder. Descriptors can be included in certain specified places within PSIP tables, subject to certain restrictions (see Table 6.16). Descriptors may be used to extend data represented as fixed fields within the tables. They make the protocol very flexible since they can be included only as needed. New descriptor types can be standardized and included without affecting receivers that have not been designed to recognize and process the new types.

digital channel: A set of one or more digital elementary streams. See *virtual channel.*

event: A collection of elementary streams with a common time base, an associated start time, and an associated end time. An event is equivalent to the common industry usage of "television program."

instance: See *table instance.*

logical channel: See *virtual channel.*

physical channel: A generic term to refer to the each of the 6-8 MHz frequency bands where television signals are embedded for transmission. Also known as the physical transmission channel (PTC). One analog virtual channel fits in one PTC but multiple digital virtual channels typically coexist in one PTC.

physical transmission channel: See *physical channel.*

program element: A generic term for one of the elementary streams or other data streams that may be included in a program. For example: audio, video, data, etc.

program: A collection of program elements. Program elements may be elementary streams. Program elements need not have any defined time base; those that do have a common time base are intended for synchronized presentation. The term *program* is also commonly used in the context of a "television program" such as a scheduled daily news broadcast. In this specification the term "event" is used to refer to a "television program" to avoid ambiguity.

---

[1] Since unanimous agreement could not be achieved by the ITU on using either the English word order, CUT, or the French word order, TUC, a compromise to use neither was reached.

section: A data structure comprising a portion of an *ISO/IEC 13818-1* defined table, such as the Program Association Table (PAT), Conditional Access Table (CAT), or Program Map Table (PMT). All sections begin with the table_id and end with the CRC_32 field, and their starting points within a packet payload are indicated by the pointer_field mechanism defined in the *ISO/IEC 13818-1* International Standard.

stream: An ordered series of bytes. The usual context for the term *stream* is the series of bytes extracted from Transport Stream packet payloads which have a common unique PID value (e.g., video PES packets or Program Map Table sections).

table: PSIP is a collection of tables describing virtual channel attributes, event features, and others. PSIP tables are compliant with the private section syntax of ISO/IEC 13818-1.

table instance: Tables are identified by the table_id field. However, in cases such as the RRT and EIT, several instances of a table may be defined simultaneously. All instances have the same PID and table_id but different table_id_extension.

virtual channel: A virtual channel is the designation, usually a number, that is recognized by the user as the single entity that will provide access to an analog TV program or a set of one or more digital elementary streams. It is called "virtual" because its identification (name and number) may be defined independently from its physical location. Examples of virtual channels are: digital radio (audio only), a typical analog TV channel, a typical digital TV channel (composed of one audio and one video stream), multi-visual digital channels (composed of several video streams and one or more audio tracks), or a data broadcast channel (composed of one or more data streams). In the case of an analog TV channel, the virtual channel designation will link to a specific physical transmission channel. In the case of a digital TV channel, the virtual channel designation will link both to the physical transmission channel and to the particular video and audio streams within that physical transmission channel.

3.4 Section and Data Structure Syntax Notation

This document contains symbolic references to syntactic elements. These references are typographically distinguished by the use of a different font (e.g., restricted), may contain the underscore character (e.g., sequence_end_code) and may consist of character strings that are not English words (e.g., dynrng).

The formats of sections and data structures in this document are described using a C-like notational method employed in *ISO/IEC 13818-1*.

4. DATA STRUCTURE

This section describes the data structure common to all PSIP tables. It also lists valid table_id and PID values for every table that belongs to PSIP.

4.1 Table Format

Tables defined in this Standard are structured in the same manner used for carrying *ISO/IEC 13818-1* -defined PSI tables, shown in Table 4.1. The structure conforms to the generic private section syntax defined in ISO/IEC 13818-1

Table 4.1 Table format used in PSIP

	Bits	Format
typical_PSI_table( ){		
table_id	8	uimsbf
section_syntax_indicator	1	'1'
private_indicator	1	'0'
zero	2	'00'
section_length	12	uimsbf
table_id_extension	16	uimsbf
reserved	2	'11'
version_number	5	uimsbf
current_next_indicator	1	bslbf
section_number	8	uimsbf
last_section_number	8	uimsbf
protocol_version	8	uimsbf
actual_table_data	*	
CRC_32	32	rpchof
}		

4.2 Table ID Ranges and Values

Table 4.2 defines Table ID ranges and values.

Table 4.2 ID Ranges and Values

Table ID Value (hex)	Tables	PID	Ref.
	ISO/IEC 13818-1 Sections:		
0x00	PROGRAM ASSOCIATION TABLE (PAT)	0	Ref. [10]
0x01	CONDITIONAL ACCESS TABLE (CAT)	1	Ref. [10]
0x02	TS PROGRAM MAP TABLE (PMT)	per PAT	Ref. [10]
0x03-0x3F	[ISO Reserved]		
	User Private Sections:		
0x40-0x7F	[User Private for other systems]		
0x80-0xBF	[User Private]		
	Other documents:		
0xC0-0xC6	[Used in other systems]		
	PSIP Tables:		
0xC7	MASTER GUIDE TABLE (MGT)	0x1FFB	Sec.6.2
0xC8	TERRESTRIAL VIRTUAL CHANNEL TABLE (TVCT)	0x1FFB	Sec.6.3.1
0xC9	CABLE VIRTUAL CHANNEL TABLE (CVCT)	0x1FFB	Sec.6.3.2
0xCA	RATING REGION TABLE (RRT)	0x1FFB	Sec.6.4
0xCB	EVENT INFORMATION TABLE (EIT)	per MGT	Sec.6.5
0xCC	EXTENDED TEXT TABLE (ETT)	per MGT	Sec.6.6
0xCD	SYSTEM TIME TABLE (STT)	0x1FFB	Sec.6.1
0xCE-0xDF	[Reserved for future ATSC use]		
0xE0-0xE5	[Used in other systems]		
0xE6-0xFE	[Reserved for future ATSC use]		
0xFF	**Inter-message Filler**		

Tables defined in this PSIP Standard, and any created as user extensions to it are considered "private" with respect to *ISO/IEC 13818-1*. Table types 0x40 through 0xBF are user defined (outside the scope of this PSIP Standard).

4.3 Extensibility

The PSIP protocol describes a number of tables conveying system information and content guide data structures. The Standard is designed to be extensible via the following mechanisms:

1. **Reserved Fields:** Fields in this Standard marked reserved shall be reserved for use either when revising this Standard, or when another standard is issued that builds upon this one. See Section 4.4 below.
2. **Standard Table Types:** As indicated in Table 4.1, table_id values in the range 0xCE-0xDF and 0xE6-0xFE shall be reserved for use either when revising this PSIP Standard, or when another standard is issued that builds upon this one.

3. **User Private Table Types:** As indicated in Table 4.1, table_id values in the range 0x40 through 0xBF shall be reserved for "user private" use.
4. **User Private Descriptors:** Privately defined descriptors may be placed at designated locations throughout the tables described in this Standard. Ownership of one or more user private descriptors may be indicated by the presence of an MPEG registration_descriptor() preceding the descriptor(s).
5. **Protocol Version Field:** Initially this field is set to 0, but after approval, future structural modifications shall be accommodated by defining different protocol version numbers.

4.4 Reserved Fields

reserved — Fields in this PSIP Standard marked "reserved" shall not be assigned by the user, but shall be available for future use. Decoders are expected to disregard reserved fields for which no definition exists that is known to that unit. Each bit in the fields marked "reserved" shall be set to one until such time as they are defined and supported.

user_private — Indicates that the bit or bit field is not defined within the scope of this Standard. The owner of the bit, and hence the entity defining its meaning, is derived via its context within a message.

zero — Indicates that the bit or bit field shall have the value zero.

5. TABLE HIERARCHY AND STRUCTURE REQUIREMENTS

The Program and System Information Protocol (PSIP) is a collection of hierarchically arranged tables for describing system information and program guide data. These tables are packetized and multiplexed according to the transport protocol detailed in ISO/IEC 13818-1.

The base PID (base_PID) is an explicitly defined value (0x1FFB) used to identify the packets for the following tables for terrestrial and cable systems: The System Time Table (STT), the Master Guide Table (MGT), the Rating Region Table (RRT), and the Virtual Channel Table (VCT). Several Event Information Tables (EIT) are also part of the PSIP data structures, with their PIDs explicitly defined in the MGT. Figure 5.1 illustrates the relations between these elements.

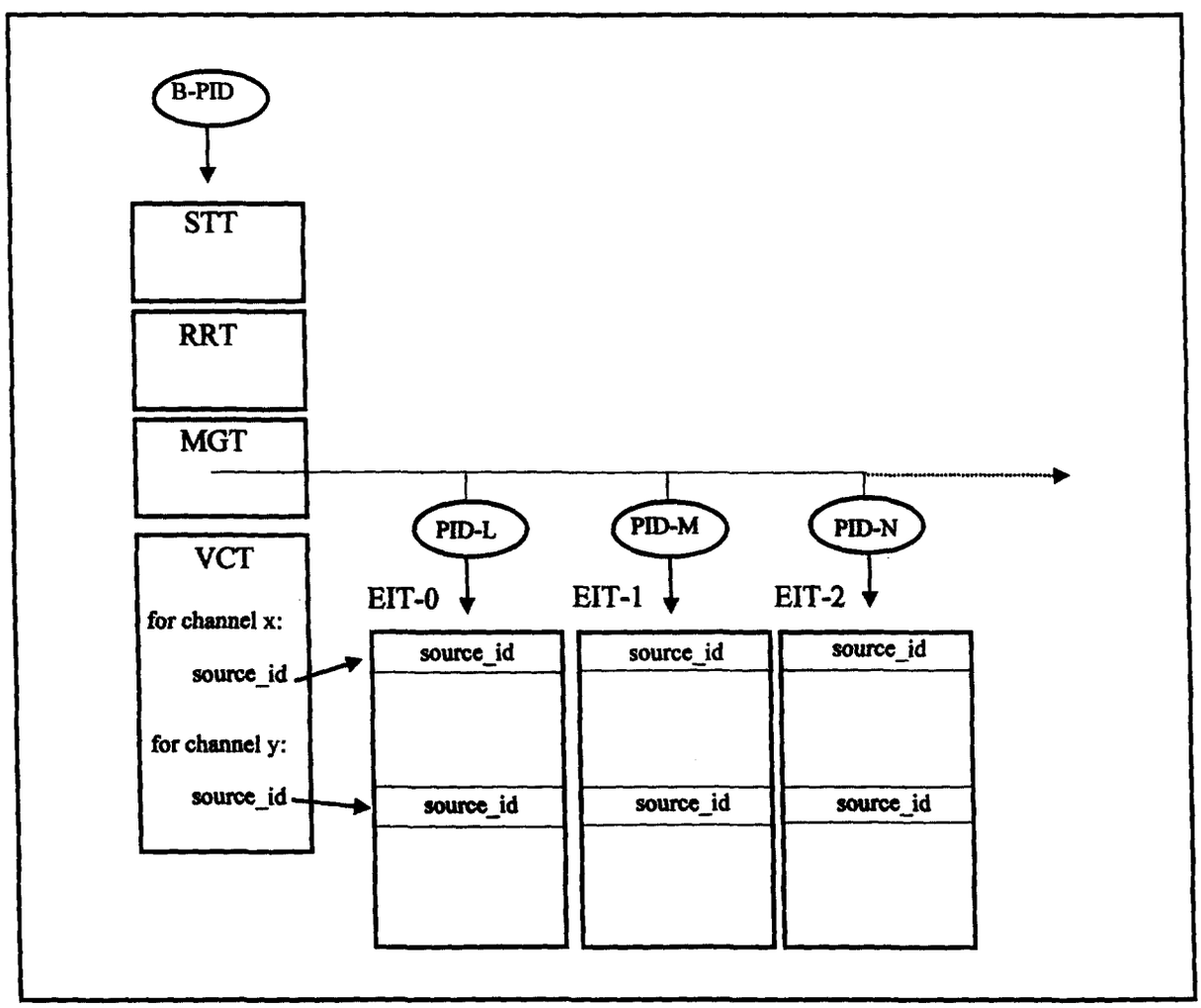

Figure 5.1 Table hierarchy for the Program and System Information Protocol (PSIP)

As the name indicates, the System Time Table (STT) carries time information needed for any application requiring synchronization. The Rating Region Table (RRT) defines rating tables valid for different regions or countries. The Master Guide Table (MGT) defines sizes, PIDs, and

version numbers for all of the relevant tables. The Virtual Channel Table (VCT) actually exists in two versions: one for terrestrial and a second one for cable applications. Its purpose is to tabulate virtual channel attributes required for navigation and tuning. The terrestrial and cable versions are similar in structure, with the latter redefining the semantics of some fields pertinent to cable operations.

Each of the Event Information Tables (EITs) lists TV programs (events) for the virtual channels described in the VCT. The EITs are sequentially and chronologically organized from EIT-0 to EIT-127. The first table (EIT-0), corresponds to the currently valid list of events. The second table (EIT-1) corresponds to the next time window, and so on.

During remultiplexing, EIT tables which originally existed in separate Transport Streams may be multiplexed into a common Transport Stream or *vice versa*. For this reason, it is very convenient to synchronize the start times and durations of the EITs. Consequently, the next three synchronization rules shall be followed when EIT tables are prepared.

Requirement 1: *Each EIT shall have a duration of 3 hours.*

Requirement 2: *Start times for EITs are restricted to 0:00 (midnight), 3:00, 6:00, 9:00, 12:00 (noon), 15:00, 18:00 and 21:00. All of these times are UTC.*

Requirement 3: *EIT-0 lists all of the available events for the current 3-hour time segment. EIT-1 lists all of the available events for the next 3-hour time segment, and likewise, non-overlapping sequential time windows are allocated for all of the other EITs.*

For example, a broadcast group operating in the Eastern time zone of the U.S. at 15:30 EDT (19:30 UTC) is required to carry EIT-0 describing events from 14:00 to 17:00 EDT (18:00 to 21:00 in UTC time) plus EIT-1, EIT-2, and EIT-3 covering the next 9-hour interval between 17:00 to 2:00 EDT. At 17:00 EDT, the first table, EIT-0, will be obsolete while EIT-1 will still be valid. At this time, simply by shifting the listed PID values in the MGT, EIT-1 becomes EIT-0 and EIT-2 becomes EIT-1. Updating tables then becomes a process of shifting the list of PIDs in the MGT and their corresponding version numbers. However, updates and/or corrections to the information in the EITs may be performed at any time since the decoder monitors the MGT continuously, where the most current copy of the version number is maintained. Updates and/or corrections to the EIT (other than shifting) shall be signaled by increasing the version number by one.

Besides listing the PIDs for all of the EITs, the Master Guide Table (MGT) also lists a set of PIDs for Extended Text Tables (ETTs). These tables carry relatively long text messages for describing events and virtual channels. Each EIT has either zero or one associated ETT. Similarly, The VCT has either zero or one associated ETT. Figure 5.2 illustrates the concept.

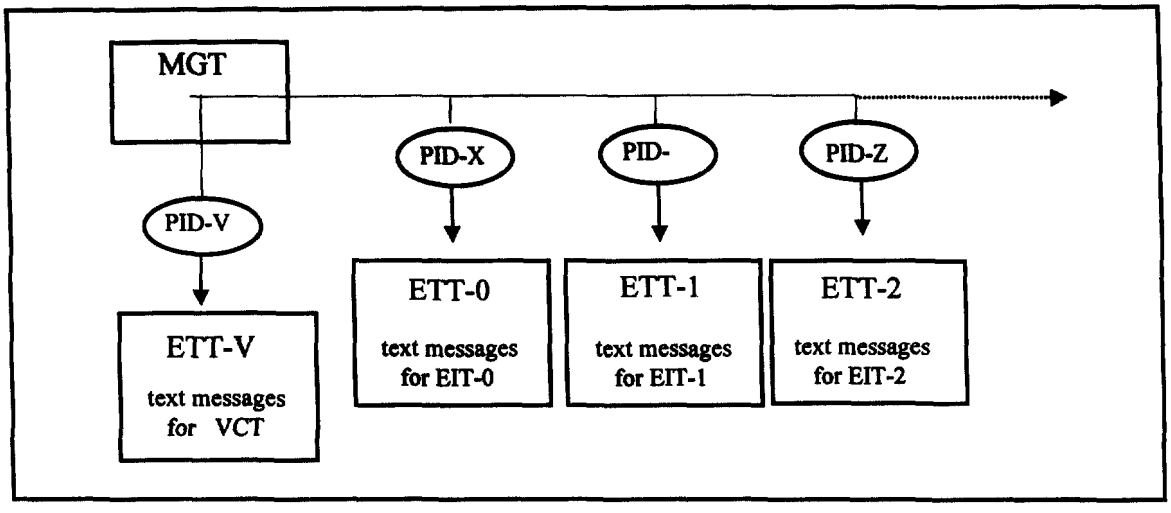

Figure 5.2 Extended Text Tables (ETTs) defined to carry text messages for describing virtual channels and events.

5.1 Requirements for terrestrial broadcast

The rules governing the transport of PSIP tables for terrestrial broadcast are:

Requirement 4: *Every digital Transport Stream in terrestrial broadcast shall include the STT, the RRT, the TVCT, the MGT, and the first four Event Information Tables (EIT-0, EIT-1, EIT-2 and EIT-3). All of the other EITs and the whole collection of ETTs are optional.*

Requirement 5: *The PSIP tables shall describe all of the digital channels multiplexed in the Transport Stream. For convenience, the tables may optionally include information about analog channels as well as other digital channels available in different Transport Streams.*

5.2 Requirements for cable

The rules governing the transport of PSIP tables for cable are:

Requirement 6: *The required tables for a cable system are: the STT, the RRT, the CVCT, and the MGT.*

Requirement 7: *The PSIP tables shall describe all of the digital channels multiplexed in the Transport Stream. For convenience, the tables may optionally include information about analog channels as well as other digital channels available in different Transport Streams.*

6. SPECIFICATIONS

This chapter describes the bit stream syntax and semantics for the System Time Table (STT), Master Guide table (MGT), Virtual Channel Table (VCT), Rating Region Table (RRT), Event Information Table (EIT), Extended Text Table (ETT), core descriptors, and the multiple string structure.

6.1 System Time Table (STT)

The System Time Table provides the current date and time of day information.

The following constraints apply to the Transport Stream packet carrying the STT:

- PID for STT shall have the value 0x1FFB (base_PID)
- transport_scrambling_control bits shall have the value '00'
- adaptation_field_control bits shall have the value '01'

The bit stream syntax for the System Time Table is shown in Table 6.1.

Table 6.1 Bit Stream Syntax for the System Time Table

Syntax	Bits	Format
system_time_table_section () {		
table_id	8	0xCD
section_syntax_indicator	1	'1'
private_indicator	1	'1'
zero	2	'00'
section_length	12	uimsbf
table_id_extension	16	0x0000
reserved	2	'11'
version_number	5	'00000'
current_next_indicator	1	'1'
section_number	8	0x00
last_section_number	8	0x00
protocol_version	8	uimsbf
system_time	32	uimsbf
GPS_UTC_offset	8	uimsbf
daylight_savings	16	uimsbf
for (I = 0;I< N;I++) {		
descriptors()	var	
}		
CRC_32	32	rpchof
}		

table_id — This is an 8-bit field, which shall be set to 0xCD, identifying this table as the System Time Table.

section_syntax_indicator — This 1-bit field shall be set to '1'. It denotes that the section follows the generic section syntax beyond the section length field.

private_indicator — This 1-bit field shall be set to '1'.

section_length — 12-bit field specifying the number of remaining bytes in this section immediately following the section_length field up to the end of the section. The value of the section_length shall be no larger than 1021.

table_id_extension — This 16-bit field shall be set to 0x0000.

version_number — This 5-bit field shall have a value of zero.

current_next_indicator — This 1-bit indicator is always set to '1' for an STT section; the STT sent is always currently applicable.

section_number — The value of this 8-bit field shall always be 0x00 (this table is only one section long).

last_section_number — The value of this 8-bit field shall always be 0x00.

protocol_version — An 8-bit unsigned integer field whose function is to allow, in the future, this table type to carry parameters that may be structured differently than those defined in the current protocol. At present, the only valid value for protocol_version is zero. Non-zero values of protocol_version may only be processed by decoders designed to accommodate the later versions as they become standardized.

system_time — A 32-bit unsigned integer quantity representing the current system time as the number of GPS seconds since 12 am, January 6th, 1980. The count of GPS seconds and leap second count shall be accurate and correct to within plus or minus four seconds, as timed at the arrival in the decoder of the Transport Stream packet carrying the last byte of the CRC.

GPS_UTC_offset — An 8-bit unsigned integer that defines the current offset in whole seconds between GPS and UTC time standards. To convert GPS time to UTC, the GPS_UTC_offset is subtracted from GPS time. Whenever the International Bureau of Weights and Measures decides that the current offset is too far in error, an additional leap second may be added (or subtracted), and the GPS_UTC_offset will reflect the change.

daylight_savings — Daylight Savings Time Control bytes. Refer to Annex A for the use of these two bytes.

CRC_32 — This is a 32-bit field that contains the CRC value that ensures a zero output from the registers in the decoder defined in Annex A of ISO/IEC 13818-1 "MPEG-2 Systems" after processing the entire System Time Table section.

6.2 *Master Guide Table (MGT)*

The MGT lists version numbers, length in bytes, and PIDs for all of the PSIP tables with the exception of the STT which works independently from the other tables.

The Master Guide Table is carried in a single section with table ID 0xC7, and obeys the syntax and semantics of the Private Section as described in Section 2.4.4.10 and 2.4.4.11 of ISO/IEC 13818-1. The following constraints apply to the Transport Stream packet carrying the MGT:

- PID for MGT shall have the value 0x1FFB (base_PID)
- transport_scrambling_control bits shall have the value '00'
- adaptation_field_control bits shall have the value '01'
- payload_unit_start_indicator of the Transport Stream packet carrying the table_id field of the MGT section shall be 1 (first Transport Stream packet of the section)
- pointer_field of the Transport Stream packet carrying the table_id field of the MGT section shall have the value 0x00 (section starts immediately after the pointer_field)

The bit stream syntax for the Master Guide Table is shown in Table 6.2.

Table 6.2 Bit Stream Syntax for the Master Guide Table

Syntax	Bits	Format
master_guide_table_section () {		
table_id	8	0xC7
section_syntax_indicator	1	'1'
private_indicator	1	'1'
zero	2	'00'
section_length	12	uimsbf
table_id_extension	16	0x0000
reserved	2	'11'
version_number	5	uimsbf
current_next_indicator	1	'1'
section_number	8	0x00
last_section_number	8	0x00
protocol_version	8	uimsbf
tables_defined	16	uimsbf
for (i=0;i<tables_defined;i++) {		
table_type	16	uimsbf
reserved	3	'111'
table_type_PID	13	uimsbf
reserved	3	'111'
table_type_version_number	5	uimsbf
number_bytes	32	uimsbf
reserved	4	'1111'
table_type_descriptors_length	12	uimsbf
for (k=0;k<N;k++)		
descriptor()	var	
}		
reserved	4	'1111'
descriptors_length	12	uimsbf
for (l = 0;l< N;l++)		
descriptor()	var	
CRC_32	32	rpchof
}		

table_id — This is an 8-bit field which shall be set to 0xC7, identifying this table as the Master Guide Table.

section_syntax_indicator — This 1-bit field shall be set to '1'. It denotes that the section follows the generic section syntax beyond the section length field.

private_indicator — This 1-bit field shall be set to '1'.

section_length — 12-bit field specifying the number of remaining bytes in this section immediately following the section_length field up to the end of the section. The value of the section_length shall be no larger than 4093.

table_id_extension — This 16-bit field shall be set to 0x0000.

version_number — This 5-bit field is the version number of MGT. The version number shall be incremented by 1 modulo 32 when any field in the table_types defined in the loop below or the MGT itself changes.

current_next_indicator — This 1-bit indicator is always set to '1' for the MGT section; the MGT sent is always currently applicable.

section_number — The value of this 8-bit field shall always be 0x00 (this table is only one section long).

last_section_number — The value of this 8-bit field shall always be 0x00.

protocol_version — An 8-bit unsigned integer field whose function shall be to allow, in the future, this table type to carry parameters that may be structured differently than those defined in the current protocol. At present, the only valid value for protocol_version is zero. Non-zero values of protocol_version may only be processed by decoders designed to accommodate the later versions as they become standardized.

tables_defined — This 16-bit unsigned integer in the range 0 to 65535 represents the number of tables in the following loop.

table_type — This 16-bit unsigned integer specifies the type of table, based on Table 6.3.

Table 6.3 Table Types

table_type	Meaning
0x0000	Terrestrial VCT with current_next_indicator=1
0x0001	Terrestrial VCT with current_next_indicator=0
0x0002	Cable VCT with current_next_indicator=1
0x0003	Cable VCT with current_next_indicator=0
0x0004	channel ETT
0x0005-0x00FF	[Reserved for future ATSC use]
0x0100-0x017F	EIT-0 to EIT-127
0x0180-0x01FF	[Reserved for future ATSC use]
0x0200-0x027F	event ETT-0 to event ETT-127
0x0280-0x0300	[Reserved for future ATSC use]
0x0301-0x03FF	RRT with rating_region 1-255
0x0400-0x0FFF	[User private]
0x1000-0xFFFF	[Reserved for future ATSC use]

table_type_PID — This 13-bit field specifies the PID for the table_type described in the loop.

table_type_version_number— This 5-bit field reflects the version number of the table_type described in the loop. The value of this field shall be the same as the version_number entered in the corresponding fields of tables and table instances. The version number for the next VCT (current_next_indicator = 0) shall be one unit more (modulo 32) than the version number for the current VCT (current_next_indicator = 1). For example, the value of this field for EIT-3 will be the same as that of the version_number that appears in the actual EIT-3.

number_bytes — This 32-bit unsigned integer field indicates the total number of bytes used for the table_type described in the loop.

table_type_descriptors_length — Total length of the descriptors for the table_type described in the loop (in bytes).

descriptors_length — Total length of the MGT descriptor list that follows (in bytes).

CRC_32 — This is a 32-bit field that contains the CRC value that ensures a zero output from the registers in the decoder defined in Annex A of ISO/IEC 13818-1 "MPEG-2 Systems" after processing the entire Master Guide Table section.

6.3 Virtual Channel Table (VCT)

The Virtual Channel Table (VCT) contains a list of attributes for virtual channels carried in the Transport Stream. Any changes in the virtual channel structure shall be conveyed with a new version number. The basic information contained in the VCT table body includes Transport Stream ID, channel number (major and minor), short channel name, carrier frequency, program number, access controlled flag, location field for extended text messages, and service type.