MCI Telecommunications Corporation
1801 Pennsylvania Avenue, NW
Washington, DC 20006
202 887 2307
FAX 202 887 3175

Susan Jin Davis
Senior Counsel
Federal Law and Public Policy

EX PARTE OR LATE FILED

April 9, 1998

RECEIVED

APR - 9 1998

FEDERAL COMMUNICATIONS COMMISSION
OFFICE OF THE SECRETARY

VIA HAND DELIVERY

Ms. Magalie Roman Salas, Secretary
Federal Communications Commission
1919 M Street, NW Room 222
Washington, DC 20554

Re: Ex Parte Presentation in CC Docket No. 97-231; CC Docket No. 97-121; CC Docket No. 97-208; CC Docket No. 97-137

Dear Ms. Salas:

On Wednesday, April 8, 1998, Jo Gentry, Senior Manager of Western Financial Operations, Carroll Barrack, Technical Advisor of National Carrier Requirements, Kecia Boney, Senior Attorney, Karen Reidy, Attorney, Carl Giesy, Director of Competition Policy, Scott Barash and Mark Schneider, attorneys with Jenner and Block, and the undersigned met with Michael Riordan and Pat DeGraba of the Office of Plans and Policy and Michael Pryor, Elizabeth Schroder, Jake Jennings, and Jordan Goldstein of the Policy Division of the Common Carrier Bureau.

The purpose of the meeting was to discuss access to combinations of unbundled network elements. The attached documents outline the topics discussed.

Two copies of this Notice are being submitted to the Secretary of the FCC in accordance with Section 1.1206(a)(2) of the Commission's rules. Due to the lateness of the hour, this Notice was not filed until the day after the meeting.

Sincerely,

Susan Jin Davis

Attachments

cc: Michael Pryor
Carol Mattey
Melissa Newman
Michael Riordan
Elizabeth Schroder
Jake Jennings
Jordan Goldstein
Pat DeGraba

ACCESS TO COMBINATIONS OF UNBUNDLED NETWORK ELEMENTS

MCI Telecommunications Corporation

April 8, 1998

Overview

- Importance of Combinations
- Legal Issues
- Technical Issues
  - Proposals on combinations
- NY PSC proposal on combinations
- Other Combinations: GR303

MCI

Combinations Is Facilities-Based Approach to Providing Local Service

→Use of Combinations is a Means to Progress to Facilities-Based Service:

- We need to establish POIs with ILECs, CLECs, ICOs for exchange of local traffic
- We need to establish access service for interexchange carriers
- We need to engineer the network to ensure sufficient network facilities
- We need to establish our own billing systems for reciprocal compensation, access, and local service

MCI

Facilities-Based Approach - Cont.

➔Use of Combinations Enables MCI to Provide Competitive Products and Services:

- We can establish different services than ILEC: different rates, pricing, terms and conditions
  - Not restricted to BOC local calling area
  - Different vertical feature packages
  - Flat rate v. measured service
- We have opportunity to integrate our own facilities as we expand our network (e.g. transport, OS/DA, loops)
- We have opportunity to integrate our facilities-based tariffed offerings with our network element-based tariffed offerings

MCI

Act's Requirements

- Section 251(c)(3) requires ILECs to provide CLECs "access to network elements on an unbundled basis at any technically feasible point"...in a manner that allows requesting carriers to combine such elements in order to provide" telecommunications service:
  - "Unbundled" refers to separate charges for elements and is not a requirement that combined elements be torn apart
  - New entrants are to be provided nondiscriminatory access to network elements:
    - Dissembling already combined elements would impose costs on new entrants which violates nondiscrimination requirement

Act's Requirements - Cont.

- "Combine" does not require new entrant to recombine elements torn apart by ILEC:
  - "Combine" means competitors can offer elements to customers in combination with other elements

➔ 271(c)(3)(C): Public Interest Test

MCI

Act's Requirements - Cont.

→ Intent of the Act is to promote local competition:

- FCC has concluded that use of combinations of unbundled network elements is important entry strategy into local market (BS-SC Order at 195):
  - New entrants should be able to choose among entry strategies
  - Use of combinations is integral to Congress' objective of promoting competition
  - By using UNEs, new entrants have incentive and ability to package and market services in ways that differ from BOCs' existing service offerings
- 8th Circuit acknowledges that Act provides for unbundled access to network elements as a way to "jumpstart" local competition (Order at 811)

Act's Requirement - Cont.

- 8th Circuit interpretation would promote discrimination, not local competition:
  - Require vandalization of existing network for no purpose
  - Allowing ILEC to be able to choose most burdensome method for accessing combined elements interprets that the Act invites discrimination

MCI

Impact of 8th Circuit Court's Decision

- ➔BOCs have proposed most inefficient, complex and costly means of offering UNEs in a manner that supposedly allows combination
- ➔Proposals introduce needless complexity and costs, resulting in discrimination against CLECs in violation of the Act

MCI

Does the BOC or the CLEC have the right to choose the method for combining?

→ The specific method by which a CLEC combines ILEC network elements is to be determined by the CLEC:

- CLECs can choose any technically feasible point
- BOCs must provide nondiscriminatory access to UNEs:
  - Economic feasibility
  - 8th Circuit interpretation is preposterous because it would require vandalization of existing network for no purpose
  - Allowing ILEC to be able to choose most burdensome method for accessing combined elements interprets that the Act invites discrimination

MCI

Choose Method - Cont.

- Under Section 251(c)(3):
  - BOCs required to provide CLECs "access to network elements on an unbundled basis . . . in a manner that allows requesting carriers to combine such elements in order to provide such telecommunications service."
- Under the 8th Circuit Interpretation:
  - Combining is totally up to the CLEC and the ILEC has the responsibility to modify its facilities as necessary to facilitate combining.

MCI

What equipment must CLECs bring to table for combination?

- The Eighth Circuit rejected the notion that the CLEC had to have facilities of its own in order to make use of combinations.

MCI

Collocation

- Eight Circuit rejected the notion that collocation is required for CLECs to access elements for combination.
- DOJ has concluded that collocation would cause unnecessary costs and delay to CLECs wishing to use combinations (DOJ Evaluation of BS-SC 271 Application at 25)

MCI

Collocation - Cont.

→Collocation Proposal:

- CLEC leases space within an ILEC central office (e.g. physical, virtual, and cageless)
- ILEC wires unbundled loops and switch ports from its Main Distribution Frame to CLEC's collo/SPOT frame
- CLEC must install own equipment (e.g. mini-MDF, cross-connects, tie-cables to ILEC's frame) in order to combine UNEs
- Collocation is NOT the only means to substitute CLEC facilities for BOC facilities
- Proponents: AIT, BA, BS, SBC, USW

Interface Panel inside Collocation Cage

Customer in service with ILEC

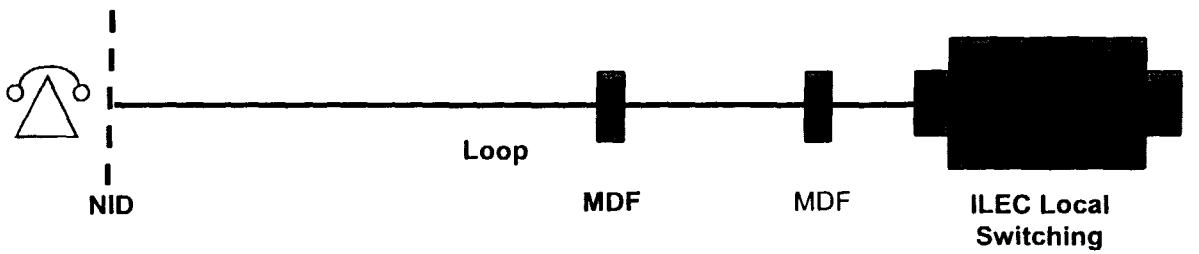

Customer disconnected prior to cutover to MCI

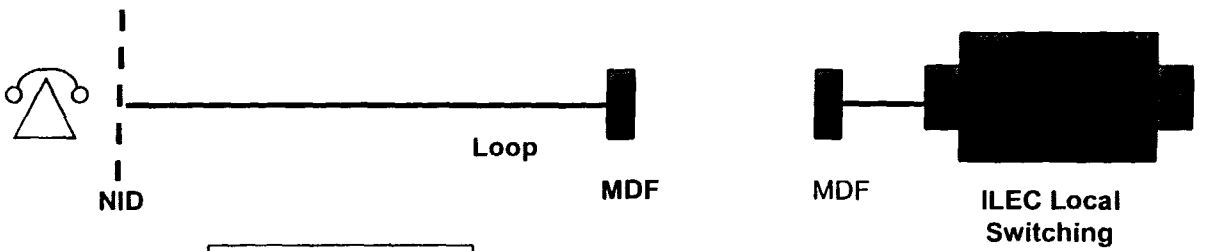

Customer reconnected via interface panel

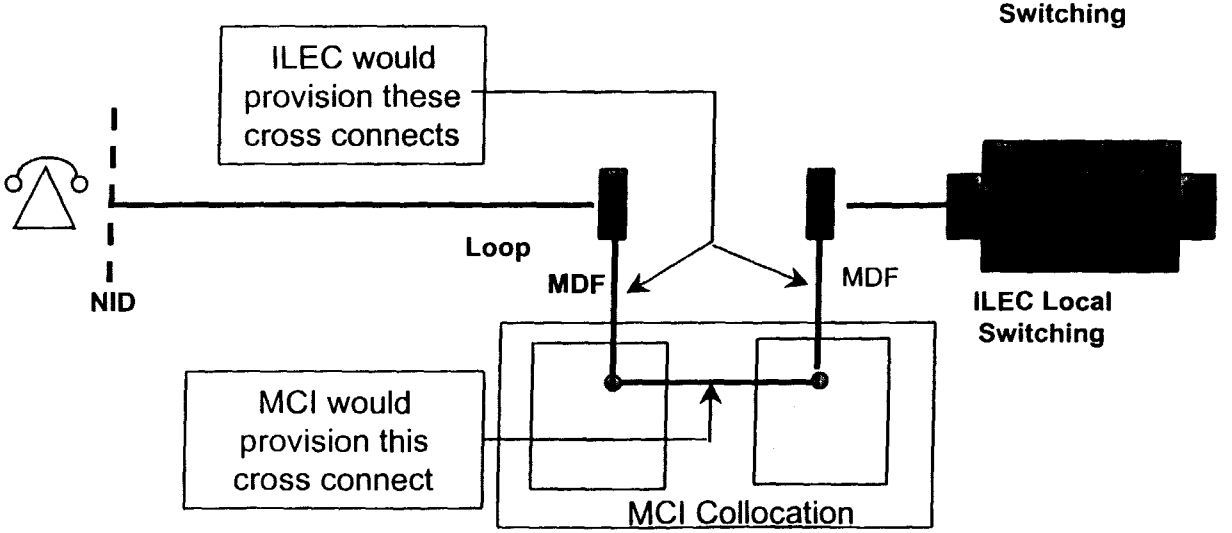

Collocation - Cont.

→Results:

- Deployment delays:
  - Collo provisioning and construction
  - Coordinating cutovers
- Negative Customer Impact:
  - Discriminates against CLECs' ability to serve customers by requiring potential CLEC customer lines to be taken out of service: risk of extended outage
  - Establishes additional potential points of failure on network
- Excessive and Unnecessary Costs
  - Collo application charges, real estate costs, installation and maintenance charges
  - Internal costs: facility support costs, prewiring, cage costs, etc.

Collocation - Cont.

- Collo incompatible with Integrated Digital Loop Carrier (IDLC):
  - IDLC loops terminate directly into switch without any physical loop termination in MDF
  - Collo would require removing customer from existing IDLC facilities and utilizing parallel Universal Digital Loop Carrier or copper facilities
  - Time Slot Interchange (TSI) Cost: BOC equipment modification would be needed

SPOT Frame

- Single Point of Termination (SPOT) frame - US West Proposal:
  - Established as part of collo arrangement to facilitate cross connects between UNEs and CLEC equipment
    - CLECs would get access to SPOT and could run jumpers on the frame
    - SPOT frame then serves as single point where all ILEC UNEs (and all CLEC equipment needing access to UNEs) are terminated and recombined by CLECs

MCI

SPOT Frame - Cont.

- USW proposes SPOTs for UBLs
- USW does not have SPOTS in all urban central offices
- Limited availability today: DS0 (POTS) only, not DS1 or DS3
- Lead time for ordering and installing needed if adding larger or expanded frames
- USW wirecenters close to exhaust for collos
- CLECs currently have no access to SPOT frame

MCI

SPOT Frame - Cont.

→Response:

- Negative Customer Impact:
  - Requires customer's line to be taken completely out of service - risk of extended outage
  - Establishes unnecessary potential points of failure on network
  - Security issues arising from shared CLEC access to SPOT frame
- Excessive, Unnecessary Costs on CLECs:
  - Start up costs of acquiring SPOT frame, tie cables, blocks, and other ancillary equipment
  - Continuing maintenance costs
  - Space limitations at end office lead to higher costs when multiple CLECs seek access to same SPOT frame

SPOT Frame - Cont.

- Discriminatory:
  - Discriminatory connection costs: ILECs will physically disconnect and CLECs must reconnect both customer's loop and switch port
  - Potentially denies CLEC access to UNEs other than loop and port

RCMAC: Logical Recombination

- Recent Change Mechanized Administrative Center (RCMAC) would allow CLECs to control UNEs on ILECs' network via same electronic/logical provisioning systems that ILECs use:
  - Existing infrastructure that some ILECs that serves quality control function
  - Can reach into ILEC routing, records administration, trouble and similar systems across given region

RCMAC - Cont.

- Proposal would tie into existing RCMAC:
  - CLEC disconnect UNEs thru software/translation changes
  - CLEC access ILEC's network interface to "recombine" thru reverse software/translation changes or pay ILEC to perform this

➔Response:

- Not technically available now
- Discriminatory because it imposes significant additional, unnecessary costs to develop provisioning system output formatted as an RCMAC input file
- Integrity and security concerns

➔Proponent: AT&T

MCI

Direct Access

- ILEC and CLEC technicians on site in a coordinated effort to connect and reconnect
- Response:
  - Massive, unnecessary coordination effort:
    - Order/due date
    - Test and turn-up
    - Potential additional coordination for maintenance and repair
  - Situation exacerbated with high volumes
  - Excessive labor costs
- Proponent: AT&T