a variety of digital wireless phones. Based on information provided by Gallaudet University's technical expert, such standards for digital cellular exist, *i.e.,* TR45.2.xxx and TIA Standard 688. Working Group #3 polled manufacturers, and they agreed that the 2.5mm jack and short cable could provide a retrofit to support TTY devices with wireless equipment. Based on the preliminary findings of Working Group #3 and the consensus of the TTY Forum, the Chairperson of Working Group #3 will circulate to the manufacturers a formal document with the proposed technical requirements for coupling devices. Manufacturers will have 30 days to provide feedback to Working Group #3.

Gallaudet University also has conducted informal field tests using a dual-mode CDMA phone (800 MHz) and shared its test results with the TTY Forum. Gallaudet's preliminary results demonstrated that the TTY calls sent using the analog mode of the dual-mode handset were relatively clear. However, when switched to the digital mode, the Baudot tones were garbled. According to Gallaudet's technical expert, results were much better for ASCII at 300 bps (Bell 103) digital transmission.[12]

The combined Working Group #1/#3 has developed an objective test procedure that is designed to evaluate the "throughput" error rate of 45.45 baud Baudot TTY devices over cellular telephone links ("Throughput Test"). The objective of the Throughput Test is to provide manufacturers with a standard test that will provide a reliable measure of error rate in transmission over an air interface. Character error is the dependent variable in this test. Manufacturers will use the real life test pattern provided to the TTY Forum as Contribution TTY/98.02.11.10 and add scenario-based modifications. The TTY Forum reached a consensus at the February 1998 Forum Meeting that phone manufacturers would use the Throughput Test to benchmark TTY signal performance over digital capabilities in order to determine the success rate for transport, and report test results at the April 1998 Forum Meeting.

At the April 1998 Forum Meeting, TTY Forum Members expressed their frustration and concern at the lack of progress and participation by the phone manufacturers in completing the throughput testing. Several TTY Forum Members expressed their dissatisfaction with the lack of progress on testing. They want to review test results in a timely manner so that wireless carriers can provide solutions for TTY users to access 9-1-1 on digital systems by the October 1, 1998, compliance date. The TTY Forum reached a consensus that phone manufacturers need to conduct the tests and report the test results by the next meeting scheduled for May 20-21, 1998. The TTY Forum agreed to send a letter from the TTY Forum with CTIA's and PCIA's endorsement urging strong support and effort from phone manufacturers to complete the testing by the next meeting. During the April 1998 Forum Meeting, the TTY Forum developed a Testing Matrix to facilitate manufacturers' completion of the tests and reporting test results in a timely manner.[13] The TTY Forum agreed that the Testing Matrix should go to every wireless and wireline phone manufacturer listed at CTIA.

---

[12] See Appendix F, TTY Forum - 2 Report, 10-11. See also Appendix B, attached hereto, for preliminary test results submitted by Gallaudet University.

[13] See Appendix C, attached hereto, Testing Matrix.

The TTY Forum formed another working group to develop a test to arrive at benchmarks for a maximum tolerable character error rate. The measurement will probably involve live conversations through a simulator that generates various character error rates. Emergency scenarios will be used for the conversations. The test will determine the error rate at which communication breaks down or requires otherwise unnecessary clarifications.

There was a consensus that field testing would be conducted by Gallaudet University to verify that laboratory throughput results bear a strong relationship to error rates in field conditions. For example, the throughput test uses TTY computer modems and not portable TTYs. The effect of using TTYs and working within a live system need to be examined. Gallaudet University has agreed to provide service to the TTY Forum in field testing, as its resources permit. The TTY Forum agreed that TTY and wireless equipment manufacturers will provide equipment support for the field testing, and carriers will support the phones used in the field testing.[14]

At the April 1998 Forum Meeting, Gallaudet University demonstrated the effects on live conversation of a 5% bit error rate within a TTY context: 20-character display, *etc.* Gallaudet also produced TTY conversations edited to introduce random character errors at 1%, 3%, and 5% error-rates. These scripts are being used by the Consumer Organizations as one piece of input to their consideration of maximum tolerable error rate and by other Forum participants to have a clearer understanding of the effect of various error rates. Gallaudet is working on refining instrumentation for purposes of data collection on live conversations with various character error rates introduced into the conversation.

C. Long-Term Solutions

Working Group #2 is investigating the technical feasibility of future technology such as Personal Digital Assistant devices to allow TTY users to take advantage of innovations in technology. Initial findings indicate that PDA devices can now do both voice and digital two-way text over wireless technology. It appears that this solution will require a simple, additional feature that will provide an automated formatting interface and allow two-way, real-time communications in Baudot. The PDA solution would not rely on modem pooling but would rely on a vigorous digital wireless infrastructure.

---

[14] According to Gallaudet University, TTY and wireless equipment manufacturers will need to work together to provide the digital wireless phones and the TTYs so that they are coupled for the field testing. Gallaudet University also noted that in order for the field testing to be completed in a timely manner, service providers must be willing to support the digital wireless phones coupled with the TTY device on their respective systems during the field testing. While Gallaudet explained that it is willing to conduct the field tests, it has very limited funding and resources. Gallaudet specifically noted that it does not have funding to support service subscriptions for the field testing and asked the relevant service providers to consider this fact when providing service support to this field testing.

The TTY Forum directed Working Group #2 to begin work on a User Requirements Document with the caveat that they produce a more detailed description of their efforts by the April 1998 Forum Meeting. Working Group #2 needs more participation from TTY Forum members representing consumer organizations to assist in the development of the User Requirements Document. Working Group #2 Chairperson was unavailable for the April 1998 Meeting. Consequently, no status report was provided at the April 1998 Meeting. The Co-chairpersons of the TTY Forum will follow up with the chairperson of Working Group #2.

With respect to VCO/HCO issues, Gallaudet University and the TTY Forum Members representing the consumer advocacy groups agreed to provide consumer requirements for wireless 9-1-1 calling. The PSAP needs to know where the VCO/HCO caller is located and the type of emergency. The standard PSAP can do Baudot or voice, but not simultaneously.

At the April 1998 meeting, it was noted that Working Groups #2 will need to increase its efforts in order to meet the objectives of the TTY Forum. The following issues will need to be addressed:

(1) What are the specific user issues that will arise with this approach? What are the user requirements?
(2) What are the Stage 0 - building requirements?
(3) What will be the digital protocol?
(4) Can simultaneous or switchable voice and data be handled for VCO using this approach?
(5) Can Working Group #2 produce for the TTY Forum a proof-of-concept prototype using V.18 or TTY-modems in digital wireless networks?

III. Steps Taken To Notify Current and Potential Subscribers

The TTY Forum has provided wireless carriers and the other Stakeholders with recommended text and notification strategy to assist carriers in notifying current and potential subscribers that they will not be able use TTYs to call 9-1-1 with digital wireless devices and services until October 1, 1998. With the increasing popularity of over-the-air activation and the use of indirect retail distributors to provide wireless services and equipment, several members of the TTY Forum expressed the need for multiple channels to distribute the message to subscribers. While the FCC has placed the obligation of notification upon the wireless carrier, many members of the TTY Forum acknowledged that cooperation among all the Stakeholders is necessary to reach the TTY user community. Each Stakeholder will assist wireless carriers in their notification efforts.

A. Notification Text

At the February 1998 Forum Meeting, the TTY Forum established an ad hoc working group, The Customer Awareness Team ("T-CAT"), to develop a recommended text that provides a clear, consistent and comprehensible message to subscribers concerning TTY access to 9-1-1 through analog and digital wireless systems. The text can be used in all communication pieces

regardless of the type of media.[15]

T-CAT included representatives of the wireless industry and Consumer Organizations. Upon the consensus of the TTY Forum, CTIA and PCIA immediately provided their members with the notification text via access to their respective websites, facsimile, and e-mail. While CTIA and PCIA encouraged their members to use the recommended notification text via multiple channels, wireless carriers will determine how to incorporate the recommended text in their notification efforts and the appropriate method of notifying their current and potential subscribers. The TTY Forum anticipates that as solutions become available, T-CAT will update the notification text and send it to the appropriate channels for distribution.

At the April 1998 TTY Forum Meeting, CTIA and PCIA indicated that they have received positive feedback from several members concerning the recommended text and appreciated the TTY Forum's timely response to their members' request.

B. Notification Strategy

At the February 1998 TTY Forum Meeting, the TTY Forum agreed to provide a notification strategy that includes all Stakeholders cooperating in the effort to provide the appropriate message to consumers. T-CAT believes that multiple channels of notification are imperative to reaching all current and potential subscribers. Attached as Appendix E is the recommended notification strategy that was sent to CTIA and PCIA members as well as to other members of the TTY Forum.

Several Stakeholders have started implementing a notification process based on the TTY Forum's recommended notification strategy. For example, AT&T Wireless will have the appropriate text printed on all bills sent to customers during the April billing cycle. BellSouth Mobility is sending the appropriate message in condensed form for inclusion in all subscriber bills. GTE Wireless has placed placards with the appropriate notification text in its retail sales offices in order to reach the largest number of potential subscribers as possible. In addition, CTIA and PCIA have received feedback from several carriers who plan to use billing inserts as the channel for notification. The target dates for these efforts coincide with the carrier's billing cycle for March or April 1998.

Many TTY Forum Members plan to use their Internet websites as a channel of notification. For example, UltraTec, the only TTY manufacturer that has consistently participated to date in the TTY Forum, provides a discussion of the TTY/E9-1-1 compatibility issues under the EasyLink page of its website, http://www.ultratec.com, to inform its customers, *i.e.*, TTY users. UltraTec also provides hyperlinks to Gallaudet University's website and CTIA's WOW-COM website for additional information. CTIA, Gallaudet University, and PCIA will also provide notification and information to current and potential subscribers at their respective websites.[16]

---

[15] See Appendix E, attached hereto, for the Recommended Notification Text and Strategy.

[16] Several carriers have indicated that they will post the notification at their website. For

Wireless carriers represented at the TTY Forum have also encouraged TTY manufacturers and wireless equipment manufacturers to provide the recommended notification text in or on the box of their products and in their operation manuals. However, TTY and wireless equipment manufacturers have not supported the use of the recommended text in this channel of notification.[17] Further discussion with TTY and wireless equipment manufacturers is necessary to clarify their reluctance to support the recommended notification text in this channel of notification.

The TTY Forum anticipates an article in the next newsletter of the Maryland Relay Services containing the TTY Forum's recommended notification text. At the April 1998 TTY Forum Meeting, the TTY Forum agreed that CTIA and PCIA will send a letter to consumer organizations requesting their assistance in notifying their members. The letter will provide a copy of the recommended notification text and offer an electronic version from CTIA's and PCIA's respective websites. The letter will also provide a copy of an article written by Judy Harkins. CTIA and PCIA will meet with Judy Harkins to establish the appropriate terms and conditions to allow consumer organizations to reprint the article in their publications. CTIA and PCIA will suggest that consumer organizations provide their members with this information via e-mail, articles in their publications, websites, and facsimile. While CTIA and PCIA will encourage consumer organizations to use multiple channels of notification, consumer organizations will determine the most appropriate method of notifying their members. CTIA and PCIA anticipates that this letter will be sent before the TTY Forum reconvenes for its May 1998 meeting.

Recommendation 1: *The Signatories of the TTY Consensus Agreement recommend that the Steering Committee of the TTY Forum include an agenda item at the May 1998 TTY Forum Meeting concerning clarification of wireless equipment and TTY manufacturers' reluctance to support insertion of recommended notification text inside or outside the separate boxes containing digital wireless phone and TTY devices.*

Recommendation 2: *The Signatories of the TTY Consensus Agreement recommend that the TTY Forum encourage the FCC and the Architectural and Transportation Barriers Compliance Board to include the recommended notification text at their respective websites and provide hyperlinks to appropriate websites that provide information on this issue.*

V. FCC Guidance

At the April 1998 Forum Meeting, questions were raised concerning whether the FCC's E9-1-1/TTY compatibility requirements require a carrier to provide VCO/HCO access to 9-1-1 over digital wireless systems. It would be helpful if the FCC could provide guidance on this issue so that a determination can be made whether VCO/HCO access is a long-term or short-term

---

example, AT&T Wireless has already posted the notification on its website.

[17] At the April 1998 Meeting, UltraTec provided a copy of the type of information they provide in the boxes of their EZ*com* Pro TTY device. See Appendix G, attached hereto, for brochure titled *Cellular TTY Calling*.

solution for TTY users to access 9-1-1 over digital wireless systems.

VI. Summary

The TTY Forum - 5 Meeting is scheduled for May 20-21, 1998 at Gallaudet University Kellogg Conference Center. The following is a summary of the TTY Forum's workplans until the next scheduled TTY Forum Meeting, *i.e.*, May 20-21, 1998.

- **Objective test (Throughput Test)** - Developed. Will be sent to manufacturers and carriers with a testing matrix to record testing completion dates and documentation.

- **Testing Matrix** - Developed. Will be sent to every wireless equipment manufacturer listed at CTIA as well as wireless and wireline carriers. All inclusive, not just those participating in the TTY Forum.

- **Subjective test (End User Test)** - Development to be finalized by next TTY Forum Meeting. Testing will be conducted by Gallaudet University. CTIA and PCIA will sponsor letter from TTY Forum requesting equipment support for Field Testing from wireless manufacturers and TTY manufacturers. Test will replicate authentic 9-1-1 calls between a deaf or hard of hearing caller and a trained 9-1-1 calltaker.

- **Letter to Manufacturers** - CTIA and PCIA will sponsor letter from TTY Forum to wireless equipment manufacturers concerning the lack of test results and inform them of the urgency and critical need to respond expeditiously to the Testing Matrix.

- **Analog Phones Compatible with TTY Devices** - CTIA External Relations Department (Eileen Duff) will coordinate the development of a list for inclusion in the notification efforts.

- **End User Requirements** - Gallaudet University and the other Consumer Organizations will draft end-user requirements for the Field Tests.

- **Coupling** - Doug Neeley will provide formal document that will include technical requirements for proposed coupling solutions. Document to be circulated to equipment manufacturers for comment within 30 days.

- **Standard Requirements Document** - Work will begin on producing Standards Requirements Documents for V.18 and the 2.5 mm jack.

- **Consensus Agreement** – Forum will work to develop a consensus on whether it is an acceptable short-term solution that by October 1, 1998, each CMRS provider would provide at least one compliant phone model for each digital technology that the CMRS provider offers, *i.e.*, CDMA, TDMA, PCS-1900(GSM), and iDEN. (Based on preliminary discussions with Consumer Organizations, acceptance of such solution may be contingent upon additional terms and conditions to be discussed at the May 1998 Forum Meeting.)

Appendix A

TTY Forum Agreements

APPENDIX A

AGREEMENTS REACHED AT TTY FORUM - 1

- "Solve for 45.45 Baudot, not to preclude looking for other solutions."
- Look for near term and long term solutions.
- Near term - send through vocoder
- Long term - circumvent vocoder, enhance quality and connectivity
- Provide for the analog function of wireless phones.
- The only body that can change the agreements reached is this body. All agreements remain intact until/unless action is taken in this forum.

AGREEMENTS REACHED AT TTY FORUM - 2

- Combine Working Group #1 and Working Group #3. Develop new set of deliverables based on the October 1, 1998, deadline.
- Short term solution: solve for backward compatibility.
- Develop Standard Test to measure error rate of TTY over digital.

AGREEMENTS REACHED AT TTY FORUM - 3

- Established six sponsored spots for identified consumer groups, relinquished (but subject to reinstatement by a consensus of the Forum) if member group misses two consecutive meetings.
- Accept modified "readability test" to be used by phone manufacturers to benchmark TTY over digital capabilities, to determine success rate for transport. (See Contribution TTY/98.02.11.06) Two tests: Manufacturers Readability Test, End User Test
- Error rate is defined as "character" not "bit" for the purpose of this forum. (Shift error rate of ratio 1/8 (*i.e.*, 1 shift error causes up to eight text errors and will be counted as such) to be determined)
- Develop User Requirements Document. The outcome of Working Group #2. Represents the effort to provide for future advancements in technology by looking at solutions beyond 45.45 baud, Baudot.
- Define process to update Customer Notification Document: refer updated information to CTIA to be distributed to The Consumer Awareness Team (T-CAT).

AGREEMENTS REACHED AT TTY FORUM - 4

- Coupling and Direction Connection
- CTIA and PCIA to sponsor letter from TTY Forum requesting manufacturers to cooperate more fully with the Forum's efforts to fulfill the FCC's TTY/E9-1-1 compatibility requirements.
- Develop SRD for 2.5 mm interface
- Consensus: Doug Neeley, Chairperson of Working Group #3, to provide manufacturers with a formal document of technical requirements for coupling solutions. Provide 30 days for feedback.
- Objective Tests

- Throughput Test to be used as objective test for equipment manufacturers and carriers. TTY Forum to provide manufacturers with Test Matrix to complete tests and documentation. Results to be logged on Test Matrix.
- CTIA and PCIA to sponsor a letter from the TTY Forum to the wireless switch and equipment manufacturers requesting their vigorous support and participation to accomplish throughput testing and to record on Test Matrix. Copies to be sent to the FCC
- Subjective Tests
- Test to be determined. Gallaudet University to conduct user research to attempt to identify a benchmark for maximum tolerable error rate. Gallaudet to receive units for field testing; to verify that lab test results will hold up in the field; and to identify any remaining user issues that may have been missed through the TTY Forum dialogue. This will be done to the extent that Gallaudet's time and resources permit.
- CTIA and PCIA to sponsor a letter from the TTY Forum requesting phone manufacturers to provide handsets to Gallaudet University for the Field Tests with additional support from UltraTec and other TTY manufacturers.
- Consumer Requirements - consumer groups with Gallaudet using equipment supplied by Wireless and TTY Manufacturers to do end user testing
- List of Analog Phones Compatible with TTY and Consumer Requirements
- Eileen Duff, CTIA's Manager for External Relations to coordinate efforts to provide a list of analog phones that are TTY compatible.
- Develop SRD for V.18 standard.
- Explore testing to quantify and qualify, if any, electromagnetic interference between digital wireless phones and TTY devices.

Appendix B

Documentation of Preliminary and Informal Tests
Proposed Test Procedures for Throughput Test

E911, TDD Compatibility to GSM

1 Introduction

1.1 Scope

The FCC requires that the Telecommunication Devices for the Deaf (TDD) be supported for E911 in all wireless networks by October 1997 [1]. The coded character set used in TDD/TTY signals is identified as the International Telegraph Alphabet Number 2 (ITA No.2) or Baudot code (in U.S.).

GSM-North America (GSM-NA) would like to determine if a TDD/TTY has any inherent limitations when being used with a GSM based system in the North American market. Ericsson Inc. has performed investigation to determine these limits and based on the completion of internal test execution, this report documents the usability of TDD/TTY under various radio conditions and listed BSS features.

1.2 Terms and Concepts

Baudot code - a code character set in which five bits represent one character.

CCN - a Coaxial Cable Network is used to create various radio conditions in a controlled lab environment.

DTX - Discontinuous Transmission is a technique of saving MS battery by turning on/off the tranmitter when no activity detected.

EFR - Enhanced Full Rate transcoders, note recommendation GSM 06.55.

FR - Full Rate transcoders, note recommendation GSM 06.10.

RXQuality - a measure of the Bit Error Rates (BER) on the air interface, (receive quality) in recommendation GSM 05.08.
RXQuality 0 = average BER 0.14%
RXQuality 1 = average BER 0.28%
RXQuality 2 = average BER 0.57%
RXQuality 3 = average BER 1.13%
RXQuality 4 = average BER 2.26%
RXQuality 5 = average BER 4.53%
RXQuality 6 = average BER 9.05%
RXQuality 7 = average BER 18.10%

TDD/TTY - communication devices used in the hard-of-hearing and deaf communities.

2 Configuration

2.1 Main cases tested

A pre-recorded "canned" test message consisting of 61 characters, "THE QUICK BROWN FOX JUMPED OVER THE LAZY DOGS BACK 1234567890" was sent and received by the TDD/TTY. Some test were repeated with the manual typed string, "QWERTY 123456". Both of these text strings are considered one sample and the tables below show the percent of errors.

These BSS conditions were tested:

Ericsson MS to Ultratec TDD/TTY with connector modifications
Full Rate (FR) and Enhanced Full Rate (EFR) transcoders
Various radio conditions (RXQuality)
Discontinuous Transmission (DTX)
Frequency Hopping
Handovers

2.2 Test Environment

These tests were done with the ULTRATEC 4425 TDD with direct 2.5mm audio connection to the Ericsson CF388 via it's standard hands-free adaptor.

Ericsson's PCS-1900 system that was used is a full GSM lab system in Richardson Texas, which includes a MSC (with echo cancellers), AUC/EIR, BSC, BTS.

To simulate the various radio conditions on the air interface (RXQuality and Handovers) the MS was connect to the BTS via a Coaxial Cable Network (CCN), but in all other cases the MS was directly connected to the BTS (as figure 1 shows).

Figure 1: LAB NETWORK CONFIGURATION

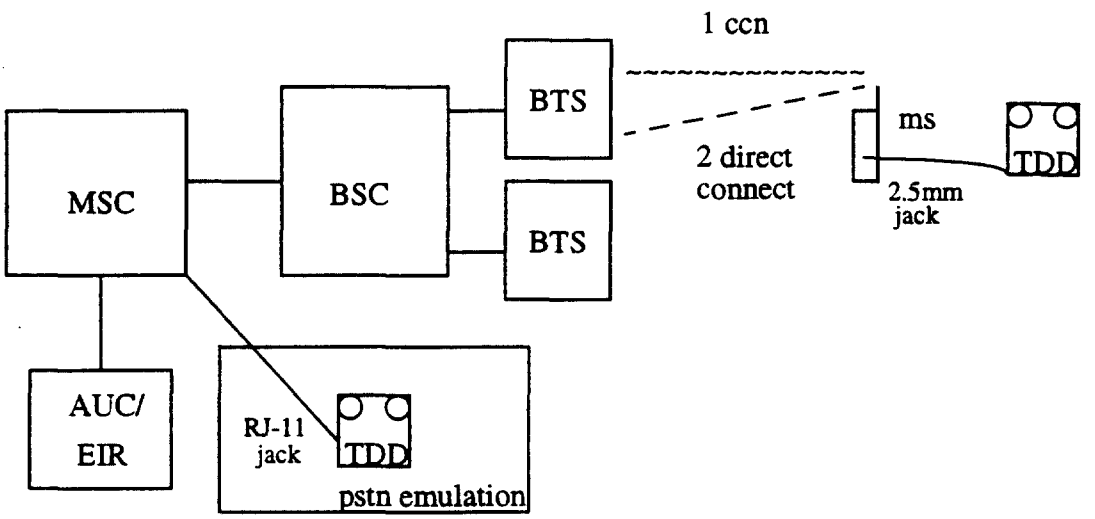

3 Testing Results

Ericsson's testing results has shown that all BSS features (including FR and EFR) support the use of TDD in a typically engineered PCS-1900 system. FR and DTX affected the Baudot signal a little, but is still very usable.

The need for the space-bar to fix a missing "case-switch" is counted as one corrupted character. Note that this type of missing "case-switch" is also experienced in the TDD/TTY's original design domain (PSTN) and is attributed to the non robust protocol, Baudot. The use of the space-bar is the manufacturers recommendation to fix this problem in real time.

Test summaries are given in tables below.

3.1 EFR Transcoder devices

The following tests were executed with EFR transcoder devices

TABLE 1: Percent Error per sample

Transmit Direction	No. of samples	Total Errors	Percent Errors	RXQual	Ciphering	DTX	Freq Hop
MS-PSTN	20	31	2.46%	0 to 1	YES	NO	NO
PSTN-MS	40	10	0.41%	0 to 1	YES	NO	NO
MS-PSTN	20	2	0.16%	0 to 1	YES	NO	YES
PSTN-MS	25	5	0.33%	0 to 1	YES	NO	YES
MS-PSTN	18	31	2.78%	0 to 1	YES	YES	NO
PSTN-MS *	20	68	5.57%	0 to 1	YES	YES	NO
MS-PSTN	20	2	0.16%	0 to 1	YES	YES	YES
PSTN-MS	20	3	0.25%	0 to 1	YES	YES	YES
MS-PSTN	**	**	**	various	YES	YES	NO

The test case marked with an * may be corrupt data, because its outside of a standard deviation. Note standard deviation data below.

**More testing was done to vary the RXQuality (increase BER) and these test showed that the TDD/TTY was stable from RXQuality 0 to 4. The amount of character errors on the TDD/TTY did not show any significant increase until RXQuality = 5, then at this point it became unusable and in extreme BER cases the call was dropped.

TABLE 2: IntraBSC/InterCELL HANDOVERS

Transmit Direction	No. of Handovers	Total Errors	DTX	Freq Hop
MS-PSTN	13	13	YES	NO
PSTN-MS	10	17	YES	NO
MS-MS	11	21	YES	NO

One to three lost characters were seen during handover situations (low signal strength).

3.1.1 MS-PSTN, RxQual = 0, DTX = OFF, Canned Message

Freq Hopping = OFF, Ciphering = OFF

Average error = 0.5, Number of samples = 20, Standard Deviation = 0.5

3.1.2 MS-PSTN, RxQual = 0, DTX = ON, Canned Message

Freq Hopping = OFF, Ciphering = OFF

Average error = 0.6, Number of samples = 20, Standard Deviation = 0.41

3.1.3 MS-PSTN, RxQual = 0, DTX = OFF, Manual typing

Freq Hopping = OFF, Ciphering = OFF

Average error = 0.4, Number of samples = 20, Standard Deviation = 0.7

3.1.4 MS-PSTN, RxQual = 0, DTX = ON, Manual typing

Freq Hopping = OFF, Ciphering = OFF

Average error = 0.35, Number of samples = 20, Standard Deviation = 0.9

3.2 FR Transcoder devices

The following tests were executed with FR transcoder devices .

TABLE 3: Percent Error per Sample

Type of call	No. of samples	Errors	Percent Errors	RXQual	Ciphering	DTX	Freq Hop
MS-PSTN	22	36	2.62%	0 to 1	YES	NO	NO
PSTN-MS	12	42	5.57%	0 to 1	YES	NO	NO
MS-PSTN	20	45	3.77%	0 to 1	YES	NO	YES
PSTN-MS	20	68	5.57%	0 to 1	YES	NO	YES
MS-PSTN	15	15	1.64%	0 to 1	YES	YES	NO
PSTN-MS	12	34	4.59%	0 to 1	YES	YES	NO
MS-PSTN	16	50	5.08%	0 to 1	YES	YES	YES
PSTN-MS	17	75	7.23%	0 to 1	YES	YES	YES
PSTN-MS	**	**	**	various	YES	YES	NO

**More testing was done to vary the RXQuality (increase BER) and these test showed that the TDD/TTY was stable from RXQuality 0 to 3. The amount of character errors on the TDD/TTY did not show any significant increase until RXQuality = 4, then at this point it became unusable and in extreme BER cases the call was dropped.

3.2.1 MS-PSTN, RXQual = 0, DTX = OFF, Canned Message

Freq Hopping = OFF, Ciphering = OFF

Average error = 2, Number of samples = 20, Standard Deviation = 2.15

3.2.2 MS-PSTN, RXQual = 0, DTX = ON, Canned Message

Freq Hopping = OFF, Ciphering = OFF

Average error = 2.55, Number of Samples=20, Standard Deviation=1.85

3.2.3 MS-PSTN, RXQual = 0, DTX = OFF, Manual Typing

Freq Hopping = OFF, Ciphering = OFF

Average error = 1.4, Number of samples = 20, Standard Deviation = 3.98

3.2.4 MS-PSTN, RXQual = 0, DTX = ON, Manual Typing

Freq Hopping = OFF, Ciphering = OFF

Average error = 2.25, Number of Samples=20, Standard Deviation=3.97

4 Summary

A MS connected to a TDD/TTY via a 2.5mm jack has been tested in many call situations and can be successfully used in a E911 call (MS-PSTN) with all BSS features listed above.

Both EFR and FR transcoders can be used with TDD/TTY on the PCS-1900 wireless side of the call. Echo Cancellers, Ciphering, DTX and Frequency hopping did not cause any noticable change in number of faults, so TDD/TTY could be used in normal network conditions.

The usable cell radius is not decrease as compared to voice calls, if cell planning uses the feature "handover at bad quality" (i.e. RXQual=5). Handovers caused a loss of 1 to 2 characters on average, therefore TDD/TTY is still usable under true mobile conditions.

For the performed test, no design modifications were made to the PCS-1900 network nodes or the Ericsson MS. However a direct connection from the TDD/TTY to the MS was created for the Ultratec TDD/TTY. Note that some TDD/TTY features made for PSTN usage (i.e. Busy Redial) can not be used with this wireless connection.

GSM-NA should now focus on a specification for the TDD/TTY to handset interface.

5 References

[1] FCC, Report and Order, CC Docket No. 94-102

ERICSSON

TECHNICAL DOCUMENT

Prepared	Subject responsible	No.		
EUS/WZ/TI K. Arvidsson 3-0133		EUS/WZ/TI-98:0041 Uae		ERAF06LH
Doc respons/Approved	**Checked**	**Date**	**Rev**	**File**
EUS/WZ/TIC M. Sibley		1/22/98	A	o:\wseng\98-0041.tec

Information copy:

EUS/BIR	Doug Neeley
EUS/RA/RR	Paul Atwal
EUS/RD/LB	Christopher Kingdon
EUS-A	Barbara Baffer

Receiver:

ERA/AX/XM	Zaga Novakovic

Engineering Record: Package C2 / VA / E911-TDD Compatibility

E911 TDD COMPATIBILITY TESTING WITH IS-136

Contents

1. NATURE OF REVISION 3

2. INTRODUCTION 3

3. SUMMARY 3

4. TEST CASES 3
4.1. General 3
4.2. Signal levels 4
4.3. Analog MS 4
4.4. VSELP MS 4
4.5. EFR MS 4
4.6. Handoff 4

5. COMMENTS ON DIGITAL CHANNEL 5

6. CONCLUSION 5

7. EQUIPMENT USED 6

8. ACRONYMS AND ABBREVIATIONS 6

1. NATURE OF REVISION

Rev.	Date Initiated	Date Issued	Changes Made
A	1/22/98	1/22/98	Initial release.

2. INTRODUCTION

The scope of this test is to verify the function of a TDD (Telecommunication Device for Deaf) with the Ericsson CMS8800 product line and the IS-136 air interface.

3. SUMMARY

Using the TDD with analog mode phones works well. In general less than 1% errors were measured. The error rate is still below 7% even for a heavily disturbed RF channel. Handoff between cells generate in average less than three lost characters.

In digital mode, the error rate is higher. With the EFR vocoder error rate is around 5% and up depending on type of phone and whether uplink or downlink is measured. The older type of vocoder (VSELP) shows higher error rates than the newer EFR vocoder, especially on the uplink.

Further testing on only the vocoder is recommended to determine how much the vocoder contribute to the error rate and how much of the errors that might actually be caused by a non optimized TDD to MS interface and signal processing in the MS.

4. TEST CASES

4.1 General

A pre-recorded text message is used for the tests. The message "THE QUICK BROWN FOX JUMPED OVER THE LAZY DOGS BACK 1234567890" consisting of 61 characters was sent and received by the TDD. The reason for using this particular message is that it covers all the characters in the alphabet and the figures 0-9.

The message was sent 10 times for each test case. The number of erroneous characters were counted and the percentage of errors recorded.

For some of the tests, manual typing of the message above was used. This was necessary because the TDD frequently switched to the wrong character set and needed to be corrected by pressing the space bar. There was no difference in the number of erroneous characters between manual and automatic transmission.

4.2 Signal levels

Signal levels between the mobile phone and the TDD were measured with an oscilloscope. The signal level to the TDD was within specified level. The signal level to the mobile phone was difficult to measure due to the low level. To make sure that the vocoders were not overloaded, a special measurement program was used in the basestation. No overload of the vocoder could be detected.

Note: A modified Ultratec TDD was used. The TDD had been modified to provide a connector with the appropriate input and output levels for connection to the hands free adapter.

4.3 Analog MS

One type of phone was tested. Messages were sent both to and from the MS. Error rates were recorded for high and low signal strength corresponding to high and low S/N ratio. Also fading and interference were tested.

No errors were encountered for the high signal strength measurement. For the low signal strength a couple of errors were recorded on the uplink (<1%). For severe interference or fading the error rate increased to 6-7%. The voice quality was then quite bad. With a little bit less interference, the error rate quickly dropped to below 1%

4.4 VSELP MS

One type of phone was tested. Messages were sent both to and from the MS. 0% and 1% BER static channel was tested for downlink. Only 0% BER static channel was tested for uplink. No fading or interference were measured due to the high error rate for static channel.

About 8% character errors was recorded for downlink 0% BER channel. For higher BER and for uplink channel, the error rates were well above 10%.

4.5 EFR MS

Two different brands of EFR mobile phones were tested. Messages were sent both to and from the MS. Only static channel with different levels of BER were tested. Tests were also done to see if there was any difference between 850 MHz and 1900 MHz but no difference between could be seen.

On downlink both the phones gave between 6-8% character errors for 0-1% BER. For higher BER the number of character errors increased to above 10%

On uplink one of the phones showed around 13% character errors even for 0% BER while the other recorded <5% character errors for 0% BER and 8% character errors for 1% BER.

The difference between the phones might be explained by different internal signal processing (before the vocoder) and possible mismatch in the interface between the MS and the TDD.

4.6 Handoff

Handoff was performed from analog to analog, digital to digital and between digital and analog, both directions. In all cases the average number of lost characters were less than 3.

Hyperband handoff was not tested.

5. COMMENTS ON DIGITAL CHANNEL

When the FSK signal is passed through the vocoder it gets very distorted. The signal will be heavily amplitude modulated and have a metallic sound. Sometimes bursts of noise will replace the FSK signal. Why does the vocoder affect the FSK signal this way?

The vocoder is not designed for the FSK signal. It is designed for voice. The vocoder takes a 20ms long sample of the audio input and tries to identify the sound. The FSK signal is very different from speech so the vocoder will have big trouble finding a sound that match the FSK signal.

This does not, however explain the difference in error rate between the uplink and the downlink that was especially noticeable on one of the phones. The vocoders in the MS and in the BS (MSC) should produce the same result. It was at the time of the testing not possible to find the cause for the difference in up and downlink performance. The interface between the TDD and the MS might cause some problems although it seemed to work fine in analog mode, and it was verified that the level to the vocoder was within limits and did not significantly affect the error rate. One explanation might be the additional signal processing that is performed in the phone (noise suppression etc.).

Other tests have shown lower error rates for GSM than the ones here recorded for D-AMPS. The reason for the difference is that the GSM vocoder has a 50% higher data rate. The higher data rate makes it possible for the GSM vocoder to handle or describe more sounds than the IS-136 vocoder.

6. CONCLUSION

These tests show that there is a higher error rate on IS-136 digital cellular than on the analog system. However, the data channel in the IS-136 standard offers a modern way to support non voice communications using updated technology. Given the inherent limitations of the TDD, wireless data communication offers the most effective way to provide mobile communication for the hearing impaired.

Summary of tests:

Channel type	Character error rate for good RF conditions
Analog uplink	≈ 1%
Analog downlink	≈ 1%
Digital VSELP uplink	>10%
Digital VSELP downlink	≈ 8%
Digital EFR uplink	5-13%
Digital EFR downlink	6-8%

7. EQUIPMENT USED

- Mobile phones supporting AMPS and IS-136 D-AMPS on 850 MHz or 1900 MHz. Vocoder of VSELP or ACELP (EFR) type.
- 1pcs TDD-MS interface cable. See figure below.
- 2 pcs Ultratec TDD Superprint 4425
- 1 pcs Signal generator Rohde & Schwartz SME03
- 1 pcs Fading generator TAS 4500
- 1 pcs Oscilloscope Tektronix TDS 220
- RBS884 Macro 850 MHz basestation
- RBS 884-1900 MHz basestation
- AXE switch with dual mode vocoder.
- Miscellaneous cables, duplex filters and step attenuators

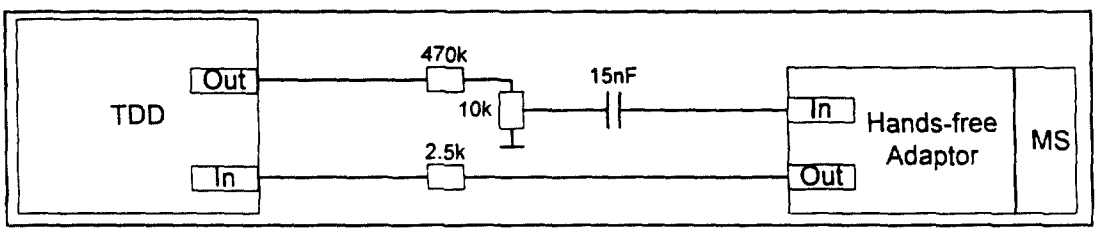

Figure 1: TDD-MS interface cable

The same interface cable was used for all the phones. Some differences however existed in the Hands-Free Adaptor provided by the MS manufacturer.

8. ACRONYMS AND ABBREVIATIONS

ACELP	Algebraic Code Excited Linear Predictive Coding
BER	Bit Error Rate
EFR	Enhanced Full Rate (ACELP Vocoder)
FSK	Frequency Skift Keying
MS	Mobile Station
PSTN	Public Switched Telephone Network
S/N	Signal to Noise
TDD	Telecommunication Device for Deaf
VSELP	Vector Sum Excited Linear Predictive Coding

Gallaudet University
Technology Assessment Program

By Norman Williams

TTY Study using VOCODER direct link

This is based on:

- Gallaudet University site
- CDMA Nokia 2180 unit
- Bell Atlantic Mobile Service
- Modified Compact TTY to include Audio Jack
- Custom cable between Compact and Handsfree jack on Nokia
- Two resistors values: 56k (from Nokia) and 1 Meg ohms (To Nokia)