ANALOG CALLS

NXI MODEM at TTY

nationsbank bowie tty line. mandy here. how can i help you? ga hello this is mabel cyzinski. i am having a problem with my checking account the acct nbr is 1a2b3c4d it says i only have 34 dollars in it but i know i have at least 729.22 dollars ga hello ms. cyzinski, first i need to ask you your address, your social security number and your mother's maiden name. ga ok my address is 1234567890 heather drive in albuquerque, md my ssn is 987 654 3210 my other's maiden name is frankenstein ga my records for your checking account say "insufficient funds" and the last check was deposited on 3 dec. ga

---

nationsbank bowie tty line. mandy here. how can i help you? ga hello this is mabel cyzinski. i am having a problem with my checking account the acct nbr is 1a2b3c4d it says i only have 34 dollars in it but i know i have at least 729.22 dollars ga hello ms. cyzinski, first i need to ask you your address, your social security number and your mother's maiden name. ga ok my address is 1234567890 heather drive in albuquerque, md my ssn is 987 654 3210 my other's maiden name is frankenstein ga my records for your checking account say "insufficient funds" and the last check was deposited on 3 dec. ga

NXI MODEM at 300 bps

nationsbank bowie tty line. mandy here. how can i help you? ga hello this is mabel cyzinski. i am having a problem with my checking account the acct nbr is 1a2b3c4d it says i only have 34 dollars in it but i know i have at least 729.22 dollars ga hello ms. cyzinski, first i need to ask you your address, your social security number and your mother's maiden name. ga ok my address is 1234567890 heather drive in albuquerque, md my ssn is 987 654 3210 my other's maiden name is frankenstein ga my records for your checking account say "insufficient funds" and the last check was deposited on 3 dec. ga

---

nationsbank bowie tty line. mandy here. how can i help you? ga hello this is mabel cyzinski. i am having a problem with my checking account the acct nbr is 1a2b3c4d it says i only have 34 dollars in it but i know i have at least 729.22 dollars ga hello ms. cyzinski, first i need to ask you your address, your social security number and your mother's maiden name. ga ok my address is 1234567890 heather drive in albuquerque, md my ssn is 987 654 3210 my other's maiden name is frankenstein ga my records for your checking account say "insufficient funds" and the last check was deposited on 3 dec. ga

DIGITAL CALLS

COMPACT at TTY

5Bit Baudot

```
natiojvbk bowie ty line.0-,$6=343.  how can i  elp you?+-  =3)?9
5=88-?el cyijpwp im hving a probemith my checking  nwmunt
the acct nbr is 1a2b3v4$  85 4 8 9,)6-1334 dollurs n it ut ipow
i have at lst 29.22 docfikheplo ms. cyzinski, ifo lto
ask you yoingyess, kisoial security nmber andnxourmother's
adene -- 9( .6 -$$43 8 123456785,=3-5=
34 $48;  8, :017473, my ssn pvpcupmy other'saaiden name is
frankenstein ga my records mx your checwaccouo sah "insffcient
fu ds"0-,$ 53 )-5 -0:,)30953$ 9, dec.  ga
-----------------------------------------

natiojvbk bowie ty line.0-,$6=343.  how can i  elp you?+-  =3)?9
5=88-?el cyijpwp im hving a probemith my checking  nwmunt
the acct nbr is 1a2b3v4$  85 4 89,)6-1334 dollurs n it ut ipow
i have at lst 29.22 docfikheplo ms..cyzinski, ifo lto
ask you yoingyess, kisoial security nmber andnxourmother's
adene -- 9( .6 -$$43 8 123456785,=3-5=34 $48;  8, :017473, my
ssn pvpcupmy other'saaiden name is frankenstein ga my records mx your
checwaccouo sah "insffcient fu ds"0-,$ 53 )-5 -0:,)30953$ 9, dec.  ga
```

COMPACT at 300 bps

7Bit ASCII

```
,xl____{?____ nat?zz_sb nz bowe"tpy kne. mandy?b,e.  how(rp  ialp ?}zu?
cp hel _  os@zj ipbo czi ska_.!i ps hp}4rnt"e  )_@le  ith?my chq king
account    the acc} _ p ac@?fbbb4@ ?zt says i     only have 34 dollars in
it bti know jety!ap l ast 7?&,|2?dollars ga hello ms. cyzilsoa!
firrp ?} ?zqed to ask you your address, your social security nber and
your mother's maiden name. ga ok my addr_tss is 1234567890 heather
drive  i& albuquerque, md   my ssn is 987 654 3210n my other's aiden
name is  frankensein ga  my records for your checking aczunt say
"insufficient funds" and the last check was deposited on 3 dwh.  ga
-------------------------------------------------

nationsbank bowie tty lize. mandy here.  how can i help ou?
ga  hello  this is mabel cyzy cki. i am having a problem with my
checking !account    the acct nbr is 1a2b3c4d  it says i only have 34
dollars in  it but i know_z have at least 729.22 dollars ga hello ms.
cyzinski, fir|i#z need to ask you your address, your social security
number and your mother's maiden nam_p ga ow!my ad hess is 1234567890
heather drive  in albuquerque, md  \my ssn is 987 654 3 10  my other's
maiden name is  frankenstein ga  m {records for your checking account
say "in;ufficient funds" and the last check was de}osited on 3 dec.  ga
```

DIGITAL CALLS

NXI MODEM at TTY

```
mutivpsoanaulli mkpheru.  hoq cp ihelplymu? ga mblo
i thpwaabelncyzjpwpmi a hkvinglknprv w my chackpnhvwcknt
lhthe aqy is 1a2b-v4d ctmsays c vnby havel34 do)-4"8,0..82
(,91: =-;(,75=)-5 72..2blafvgblo m cyzimfki, 8 xirstwneek to
ask yo qour adkres0 yourlfociqurwty nuber and yokr other's
nmfpinama.?/-8+(6.7$$!=8 qwertykiopleathec dia  in
wlbuarque, md alsfn cbuytrleqqp pther',.-;$3,0-.2.4-,(
3.538-8(=)43:.4? !9+ 697:=3: accoumt nl "insufficiena
jpknanj thf oaft cgec wnpf9253.0.(wm ckmhz
-----------------------------------------------

matinfba(.1:3 556,):,3. mandynhere. how can i help yo +-, =7==2
5=08'-?3) :628,(8. i am muvcnp49?3;,2/).6 :+92,+ wkmt
lthaqwrls 1-1b34dl itvni?6.=-;3 34llars vcnznit but i
kpcqc have atlckpmwwldolarsnga hevlo ms;wjqfki0 :
xirsow ngto nakkivnp yourlsoci;6 ,7.34 .-.$ 6974 ..
5=34(s m, ,-.-. gknok my uddresspis weriop heatgey drive
apcpqxqn mdm vylssn is 07 654 ewqp nmy oher' .-8$3.-.3 :;
  !4-,(3.5300 +)/ 43: !66974 :=3:(8,27:5 ?,0
1';'129./7,"nand theno chec wn depositef opk dec.w ga q
```

NXI MODEM at 300 bps

```
nationsbank bowie tty line. mandy here.  how can i help you? ga  hello
this is mabel cyzinski. i am having a problem with my checking account
the acct nbr is 1a2b3c4d it says i only have 34 dollars in  it but i know
i have at least 729.22 dollars ga hello ms. cyzinski, first i need to
ask you your address, your social security number and your mother's
maiden name. ga ok my address is 1234567890 heather drive  in
albuquerque, md   my ssn is 987 654 3210  my other's maiden name is
frankenstein ga  my records for your checking account say "insufficient
funds" and the last check was deposited on 3 dec.  ga
-----------------------------------------------

nationsbank bowie tty line. mandy here.  how can i help you? ga  hello
this is mabel cyzinski_. i am having a problem with my checking account
the acct nbr is 1a2b3c4d  it says i only have 34 dollars in  it but i know
i have at least 729.22 dollars ga hello ms. cyzinski, first i need to
ask you your address, your social security number and your mother's
maiden name. ga ok my address is 1234567890 heather drive  in
albuquerque, md   my ssn is 987 654 3210  my other's maiden name is
frankenstein ga  my records for your checking account say "insufficient
funds" and the last check was deposited on 3 dec.  ga
```

ERICSSON

TECHNICAL DOCUMENT

Prepared	Subject responsible	No.		
EUS/WZ/TI K. Arvidsson 3-0133		EUS/WZ/TI-98:0041 Uae		ERAF06LH
Doc respons/Approved	**Checked**	**Date**	**Rev**	**File**
EUS/WZ/TIC M. Sibley	J.S.	1/22/98	A	o:\wseng\98-0041.tec

Information copy:

EUS/BIR	Doug Neeley
EUS/RA/RR	Paul Atwal
EUS/RD/LB	Christopher Kingdon
EUS-A	Barbara Baffer

Receiver:

ERA/AX/XM	Zaga Novakovic

Engineering Record: Package C2 / VA / E911-TDD Compatibility

E911 TDD COMPATIBILITY TESTING WITH IS-136

Contents

1. NATURE OF REVISION 3

2. INTRODUCTION 3

3. SUMMARY 3

4. TEST CASES 3
4.1. General 3
4.2. Signal levels 4
4.3. Analog MS 4
4.4. VSELP MS 4
4.5. EFR MS 4
4.6. Handoff 4

5. COMMENTS ON DIGITAL CHANNEL 5

6. CONCLUSION 5

7. EQUIPMENT USED 6

8. ACRONYMS AND ABBREVIATIONS 6

1. NATURE OF REVISION

Rev.	Date Initiated	Date Issued	Changes Made
A	1/22/98	1/22/98	Initial release.

2. INTRODUCTION

The scope of this test is to verify the function of a TDD (Telecommunication Device for Deaf) with the Ericsson CMS8800 product line and the IS-136 air interface.

3. SUMMARY

Using the TDD with analog mode phones works well. In general less than 1% errors were measured. The error rate is still below 7% even for a heavily disturbed RF channel. Handoff between cells generate in average less than three lost characters.

In digital mode, the error rate is higher. With the EFR vocoder error rate is around 5% and up depending on type of phone and whether uplink or downlink is measured. The older type of vocoder (VSELP) shows higher error rates than the newer EFR vocoder, especially on the uplink.

Further testing on only the vocoder is recommended to determine how much the vocoder contribute to the error rate and how much of the errors that might actually be caused by a non optimized TDD to MS interface and signal processing in the MS.

4. TEST CASES

4.1 General

A pre-recorded text message is used for the tests. The message "THE QUICK BROWN FOX JUMPED OVER THE LAZY DOGS BACK 1234567890" consisting of 61 characters was sent and received by the TDD. The reason for using this particular message is that it covers all the characters in the alphabet and the figures 0-9.

The message was sent 10 times for each test case. The number of erroneous characters were counted and the percentage of errors recorded.

For some of the tests, manual typing of the message above was used. This was necessary because the TDD frequently switched to the wrong character set and needed to be corrected by pressing the space bar. There was no difference in the number of erroneous characters between manual and automatic transmission.

4.2 Signal levels

Signal levels between the mobile phone and the TDD were measured with an oscilloscope. The signal level to the TDD was within specified level. The signal level to the mobile phone was difficult to measure due to the low level. To make sure that the vocoders were not overloaded, a special measurement program was used in the basestation. No overload of the vocoder could be detected.

Note: A modified Ultratec TDD was used. The TDD had been modified to provide a connector with the appropriate input and output levels for connection to the hands free adapter.

4.3 Analog MS

One type of phone was tested. Messages were sent both to and from the MS. Error rates were recorded for high and low signal strength corresponding to high and low S/N ratio. Also fading and interference were tested.

No errors were encountered for the high signal strength measurement. For the low signal strength a couple of errors were recorded on the uplink (<1%). For severe interference or fading the error rate increased to 6-7%. The voice quality was then quite bad. With a little bit less interference, the error rate quickly dropped to below 1%

4.4 VSELP MS

One type of phone was tested. Messages were sent both to and from the MS. 0% and 1% BER static channel was tested for downlink. Only 0% BER static channel was tested for uplink. No fading or interference were measured due to the high error rate for static channel.

About 8% character errors was recorded for downlink 0% BER channel. For higher BER and for uplink channel, the error rates were well above 10%.

4.5 EFR MS

Two different brands of EFR mobile phones were tested. Messages were sent both to and from the MS. Only static channel with different levels of BER were tested. Tests were also done to see if there was any difference between 850 MHz and 1900 MHz but no difference between could be seen.

On downlink both the phones gave between 6-8% character errors for 0-1% BER. For higher BER the number of character errors increased to above 10%

On uplink one of the phones showed around 13% character errors even for 0% BER while the other recorded <5% character errors for 0% BER and 8% character errors for 1% BER.

The difference between the phones might be explained by different internal signal processing (before the vocoder) and possible mismatch in the interface between the MS and the TDD.

4.6 Handoff

Handoff was performed from analog to analog, digital to digital and between digital and analog, both directions. In all cases the average number of lost characters were less than 3.

Hyperband handoff was not tested.

5. COMMENTS ON DIGITAL CHANNEL

When the FSK signal is passed through the vocoder it gets very distorted. The signal will be heavily amplitude modulated and have a metallic sound. Sometimes bursts of noise will replace the FSK signal. Why does the vocoder affect the FSK signal this way?

The vocoder is not designed for the FSK signal. It is designed for voice. The vocoder takes a 20ms long sample of the audio input and tries to identify the sound. The FSK signal is very different from speech so the vocoder will have big trouble finding a sound that match the FSK signal.

This does not, however explain the difference in error rate between the uplink and the downlink that was especially noticeable on one of the phones. The vocoders in the MS and in the BS (MSC) should produce the same result. It was at the time of the testing not possible to find the cause for the difference in up and downlink performance. The interface between the TDD and the MS might cause some problems although it seemed to work fine in analog mode, and it was verified that the level to the vocoder was within limits and did not significantly affect the error rate. One explanation might be the additional signal processing that is performed in the phone (noise suppression etc.).

Other tests have shown lower error rates for GSM than the ones here recorded for D-AMPS. The reason for the difference is that the GSM vocoder has a 50% higher data rate. The higher data rate makes it possible for the GSM vocoder to handle or describe more sounds than the IS-136 vocoder.

6. CONCLUSION

These tests show that there is a higher error rate on IS-136 digital cellular than on the analog system. However, the data channel in the IS-136 standard offers a modern way to support non voice communications using updated technology. Given the inherent limitations of the TDD, wireless data communication offers the most effective way to provide mobile communication for the hearing impaired.

Summary of tests:

Channel type	Character error rate for good RF conditions
Analog uplink	≈ 1%
Analog downlink	≈ 1%
Digital VSELP uplink	>10%
Digital VSELP downlink	≈ 8%
Digital EFR uplink	5-13%
Digital EFR downlink	6-8%

7. EQUIPMENT USED

- Mobile phones supporting AMPS and IS-136 D-AMPS on 850 MHz or 1900 MHz. Vocoder of VSELP or ACELP (EFR) type.
- 1pcs TDD-MS interface cable. See figure below.
- 2 pcs Ultratec TDD Superprint 4425
- 1 pcs Signal generator Rohde & Schwartz SME03
- 1 pcs Fading generator TAS 4500
- 1 pcs Oscilloscope Tektronix TDS 220
- RBS884 Macro 850 MHz basestation
- RBS 884-1900 MHz basestation
- AXE switch with dual mode vocoder.
- Miscellaneous cables, duplex filters and step attenuators

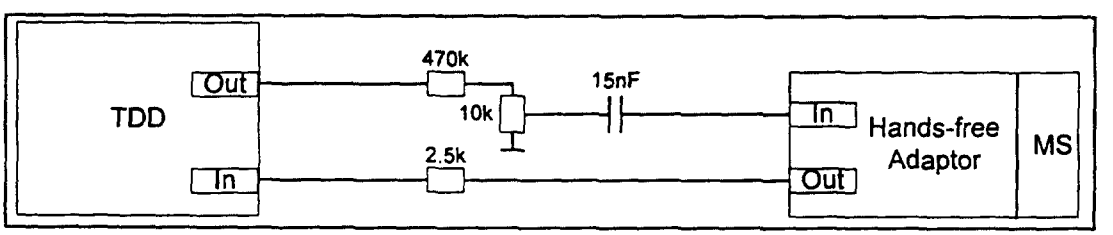

Figure 1: TDD-MS interface cable

The same interface cable was used for all the phones. Some differences however existed in the Hands-Free Adaptor provided by the MS manufacturer.

8. ACRONYMS AND ABBREVIATIONS

ACELP	Algebraic Code Excited Linear Predictive Coding
BER	Bit Error Rate
EFR	Enhanced Full Rate (ACELP Vocoder)
FSK	Frequency Skift Keying
MS	Mobile Station
PSTN	Public Switched Telephone Network
S/N	Signal to Noise
TDD	Telecommunication Device for Deaf
VSELP	Vector Sum Excited Linear Predictive Coding

E911, TDD Compatibility to GSM

1 Introduction

1.1 Scope

The FCC requires that the Telecommunication Devices for the Deaf (TDD) be supported for E911 in all wireless networks by October 1997 [1]. The coded character set used in TDD/TTY signals is identified as the International Telegraph Alphabet Number 2 (ITA No.2) or Baudot code (in U.S.).

GSM-North America (GSM-NA) would like to determine if a TDD/TTY has any inherent limitations when being used with a GSM based system in the North American market. Ericsson Inc. has performed investigation to determine these limits and based on the completion of internal test execution, this report documents the usability of TDD/TTY under various radio conditions and listed BSS features.

1.2 Terms and Concepts

Baudot code - a code character set in which five bits represent one character.

CCN - a Coaxial Cable Network is used to create various radio conditions in a controlled lab environment.

DTX - Discontinuous Transmission is a technique of saving MS battery by turning on/off the tranmitter when no activity detected.

EFR - Enhanced Full Rate transcoders, note recommendation GSM 06.55.

FR - Full Rate transcoders, note recommendation GSM 06.10.

RXQuality - a measure of the Bit Error Rates (BER) on the air interface, (receive quality) in recommendation GSM 05.08.
RXQuality 0 = average BER 0.14%
RXQuality 1 = average BER 0.28%
RXQuality 2 = average BER 0.57%
RXQuality 3 = average BER 1.13%
RXQuality 4 = average BER 2.26%
RXQuality 5 = average BER 4.53%
RXQuality 6 = average BER 9.05%
RXQuality 7 = average BER 18.10%

TDD/TTY - communication devices used in the hard-of-hearing and deaf communities.

2 Configuration

2.1 Main cases tested

A pre-recorded "canned" test message consisting of 61 characters, "THE QUICK BROWN FOX JUMPED OVER THE LAZY DOGS BACK 1234567890" was sent and received by the TDD/TTY. Some test were repeated with the manual typed string, "QWERTY 123456". Both of these text strings are considered one sample and the tables below show the percent of errors.

These BSS conditions were tested:

Ericsson MS to Ultratec TDD/TTY with connector modifications
Full Rate (FR) and Enhanced Full Rate (EFR) transcoders
Various radio conditions (RXQuality)
Discontinuous Transmission (DTX)
Frequency Hopping
Handovers

2.2 Test Environment

These tests were done with the ULTRATEC 4425 TDD with direct 2.5mm audio connection to the Ericsson CF388 via it's standard hands-free adaptor.

Ericsson's PCS-1900 system that was used is a full GSM lab system in Richardson Texas, which includes a MSC (with echo cancellers), AUC/EIR, BSC, BTS.

To simulate the various radio conditions on the air interface (RXQuality and Handovers) the MS was connect to the BTS via a Coaxial Cable Network (CCN), but in all other cases the MS was directly connected to the BTS (as figure 1 shows).

Figure 1: LAB NETWORK CONFIGURATION

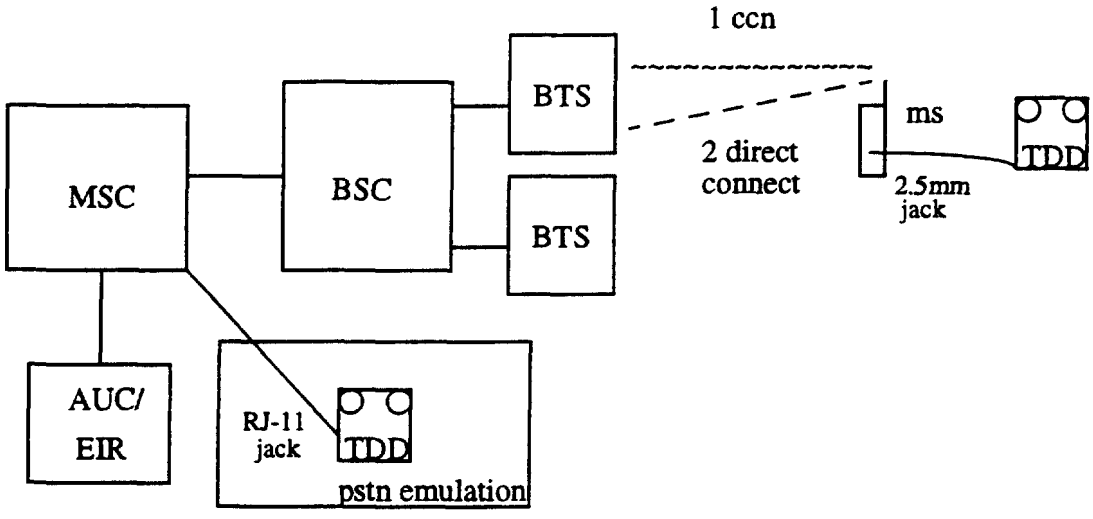

3 Testing Results

Ericsson's testing results has shown that all BSS features (including FR and EFR) support the use of TDD in a typically engineered PCS-1900 system. FR and DTX affected the Baudot signal a little, but is still very usable.

The need for the space-bar to fix a missing "case-switch" is counted as one corrupted character. Note that this type of missing "case-switch" is also experienced in the TDD/TTY's original design domain (PSTN) and is attributed to the non robust protocol, Baudot. The use of the space-bar is the manufacturers recommendation to fix this problem in real time.

Test summaries are given in tables below.

3.1 EFR Transcoder devices

The following tests were executed with EFR transcoder devices

TABLE 1: Percent Error per sample

Transmit Direction	No. of samples	Total Errors	Percent Errors	RXQual	Ciphering	DTX	Freq Hop
MS-PSTN	20	31	2.46%	0 to 1	YES	NO	NO
PSTN-MS	40	10	0.41%	0 to 1	YES	NO	NO
MS-PSTN	20	2	0.16%	0 to 1	YES	NO	YES
PSTN-MS	25	5	0.33%	0 to 1	YES	NO	YES
MS-PSTN	18	31	2.78%	0 to 1	YES	YES	NO
PSTN-MS *	20	68	5.57%	0 to 1	YES	YES	NO
MS-PSTN	20	2	0.16%	0 to 1	YES	YES	YES
PSTN-MS	20	3	0.25%	0 to 1	YES	YES	YES
MS-PSTN	**	**	**	various	YES	YES	NO

The test case marked with an * may be corrupt data, because its outside of a standard deviation. Note standard deviation data below.

**More testing was done to vary the RXQuality (increase BER) and these test showed that the TDD/TTY was stable from RXQuality 0 to 4. The amount of character errors on the TDD/TTY did not show any significant increase until RXQuality = 5, then at this point it became unusable and in extreme BER cases the call was dropped.

TABLE 2: IntraBSC/InterCELL HANDOVERS

Transmit Direction	No. of Handovers	Total Errors	DTX	Freq Hop
MS-PSTN	13	13	YES	NO
PSTN-MS	10	17	YES	NO
MS-MS	11	21	YES	NO

One to three lost characters were seen during handover situations (low signal strength).

3.1.1 MS-PSTN, RxQual = 0, DTX = OFF, Canned Message

Freq Hopping = OFF, Ciphering = OFF

Average error = 0.5, Number of samples = 20, Standard Deviation = 0.5

3.1.2 MS-PSTN, RxQual = 0, DTX = ON, Canned Message

Freq Hopping = OFF, Ciphering = OFF

Average error = 0.6, Number of samples = 20, Standard Deviation = 0.41

3.1.3 MS-PSTN, RxQual = 0, DTX = OFF, Manual typing

Freq Hopping = OFF, Ciphering = OFF

Average error = 0.4, Number of samples = 20, Standard Deviation = 0.7

3.1.4 MS-PSTN, RxQual = 0, DTX = ON, Manual typing

Freq Hopping = OFF, Ciphering = OFF

Average error = 0.35, Number of samples = 20, Standard Deviation = 0.9

3.2 FR Transcoder devices

The following tests were executed with FR transcoder devices .

TABLE 3: Percent Error per Sample

Type of call	No. of samples	Errors	Percent Errors	RXQual	Ciphering	DTX	Freq Hop
MS-PSTN	22	36	2.62%	0 to 1	YES	NO	NO
PSTN-MS	12	42	5.57%	0 to 1	YES	NO	NO
MS-PSTN	20	45	3.77%	0 to 1	YES	NO	YES
PSTN-MS	20	68	5.57%	0 to 1	YES	NO	YES
MS-PSTN	15	15	1.64%	0 to 1	YES	YES	NO
PSTN-MS	12	34	4.59%	0 to 1	YES	YES	NO
MS-PSTN	16	50	5.08%	0 to 1	YES	YES	YES
PSTN-MS	17	75	7.23%	0 to 1	YES	YES	YES
PSTN-MS	**	**	**	various	YES	YES	NO

**More testing was done to vary the RXQuality (increase BER) and these test showed that the TDD/TTY was stable from RXQuality 0 to 3. The amount of character errors on the TDD/TTY did not show any significant increase until RXQuality = 4, then at this point it became unusable and in extreme BER cases the call was dropped.

3.2.1 MS-PSTN, RXQual = 0, DTX = OFF, Canned Message

Freq Hopping = OFF, Ciphering = OFF

Average error = 2, Number of samples = 20, Standard Deviation = 2.15

3.2.2 MS-PSTN, RXQual = 0, DTX = ON, Canned Message

Freq Hopping = OFF, Ciphering = OFF

Average error = 2.55, Number of Samples=20, Standard Deviation=1.85

3.2.3 MS-PSTN, RXQual = 0, DTX = OFF, Manual Typing

Freq Hopping = OFF, Ciphering = OFF

Average error = 1.4, Number of samples = 20, Standard Deviation = 3.98

3.2.4 MS-PSTN, RXQual = 0, DTX = ON, Manual Typing

Freq Hopping = OFF, Ciphering = OFF

Average error = 2.25, Number of Samples=20, Standard Deviation=3.97

4 Summary

A MS connected to a TDD/TTY via a 2.5mm jack has been tested in many call situations and can be successfully used in a E911 call (MS-PSTN) with all BSS features listed above.

Both EFR and FR transcoders can be used with TDD/TTY on the PCS-1900 wireless side of the call. Echo Cancellers, Ciphering, DTX and Frequency hopping did not cause any noticable change in number of faults, so TDD/TTY could be used in normal network conditions.

The usable cell radius is not decrease as compared to voice calls, if cell planning uses the feature "handover at bad quality" (i.e. RXQual=5). Handovers caused a loss of 1 to 2 characters on average, therefore TDD/TTY is still usable under true mobile conditions.

For the performed test, no design modifications were made to the PCS-1900 network nodes or the Ericsson MS. However a direct connection from the TDD/TTY to the MS was created for the Ultratec TDD/TTY. Note that some TDD/TTY features made for PSTN usage (i.e. Busy Redial) can not be used with this wireless connection.

GSM-NA should now focus on a specification for the TDD/TTY to handset interface.

5 References

[1] FCC, Report and Order, CC Docket No. 94-102

Appendix C

Testing Matrix

TTY Forum Testing Completion Matrix

Enter completion date and document reference number for each column

Company	Technology (key specs)	Coupling	TTY Forum Throughput Test (LabTest)	End User Test (Field Test) Provide Equip for Test
EXAMPLE: *Bell Atlantic Mobile*	*CDMA, 800MHZ*	*preliminary 3/20*	*preliminary 3/30*	*10/22/97*
Bell Atlantic Mobile	*Analog, 800MHZ*	*preliminary 3/20*	*preliminary 3/30*	*10/22/97*

Appendix D

Resolution Document - TTY Forum 1 dated September 19, 1997

RESOLUTION DOCUMENT
September 19, 1997

CTIA FORUM
Seeking Solutions To TTY/TDD Through Wireless Digital Systems
September 17-19, 1997

AGREEMENTS REACHED:

1. **SOLVE FOR 45.45B BAUDOT (not to preclude others)**

2. **TWO-PHASED APPROACH:**
   - **Near Term - Voice/Vocoder**
   - **Long Term - Digital Wireless transport**
     - **Enhanced Vocoder**

3. **ANALOG FUNCTIONS OF WIRELESS**
   - **Analog networks have the capability to support transmission formats used by TTY today (Baudot 45.5 [AFSK])**
   - **Some interface issues exist for specific analog wireless products, and specific TTY products.**

RESOLUTION DOCUMENT
September 19, 1997

CTIA FORUM
Seeking Solutions To TTY/TDD Through Wireless Digital Systems
September 17-19, 1997

WORKING GROUP #1

NAME: Performance of TTY Signals over Voice Service

CHAIR:	Contact Information
Wesley Howe, GTE Wireless	770-391-1727 (p), 770-395-8505 (f), whowe@mobilnet.gte.com

SCOPE: Evaluate TTY over voice service. Establish benchmark expectations using lab tests/field tests. At point of usability benchmarking, Voice group and Data group combine. Identify present and future user expectations and operational issues (as defined below).

OPERATIONAL ISSUES:
(Seeking functional equivalency with wireline, including 9-1-1 operations)

- Call progress indicators
  - incoming call, etc.
- Quality of service
  - TTY vs. Voice
  - Cell Site hand-offs
- Voice Feature functionality
- VCO/HCO

RESOLUTION DOCUMENT
September 19, 1997

CTIA FORUM
Seeking Solutions To TTY/TDD Through Wireless Digital Systems
September 17-19, 1997

WORKING GROUP #2

Name: Performance of TTY Signals over Data Service

CHAIR:	Contact Information
Brye Bonner, Motorola	847-576-5920 (p), 847-536-5564 (f), bonner-CDYN30@email.mot.com

SCOPE: Evaluate TTY over data service. Establish benchmark expectations using lab tests/field tests. At point of usability benchmarking, Voice group and Data group combine. Identify present and future user expectations and operational issues (as defined below).

OPERATIONAL ISSUES:
(Seeking functional equivalency with wireline, including 9-1-1 operations)

- **Call progress indicators**
  - **incoming call, etc.**
- **Quality of service**
  - **TTY vs. Voice**
  - **Cell Site hand-offs**
- **Voice Feature functionality**
- **VCO/HCO**

RESOLUTION DOCUMENT
September 19, 1997

CTIA FORUM
Seeking Solutions To TTY/TDD Through Wireless Digital Systems
September 17-19, 1997

WORKING GROUP #3

Name: Coupling Work Group

Chairs	Contact information
David Holmes, AT&T Wireless	425-828-1843 (p), 425-828-1848 (f), david.holmes@attws.com
Doug Neeley, Ericsson	972-583-0562 (p), 972-583-1809 (f), doug.neeley@ericsson.com also:214-906-2649 (mbl), junkdog@gte.net

SCOPE: Identify optimal coupling, that is readily achievable, to minimize effect on error rate. Among its goals, this group shall strive to maximize compatibility with existing products and, to the extent readily achievable, provide a common solution for the voice and data service approaches (as defined below).

1. Evaluate issues/problems with acoustic coupling (for Baudot)
    - Recommend techniques for improvement
2. Specify requirements for electrical interface (TTY to wireless phone - including connectors) to support Baudot/speechband transmissions optimized for:
    - compatibility with existing TTY/wireless phones
    - minimum cost (e.g. use of other existing standards)
3. Specify requirements for electrical interface to support digital transmission on wireless interfacing:
    - V.18 etc. support
    - connector commonality with Issue 2 (above), if possible
    - utilize current standards (IS-131, etc.)

Process for integrating Issues 1 and 3 (above):

- CTIA Systems Requirements Document
    - implementation issues
    - backward compatibility issues

RESOLUTION DOCUMENT
September 19, 1997

CTIA FORUM
Seeking Solutions To TTY/TDD Through Wireless Digital Systems
September 17-19, 1997

THE CHARGE TO EACH WORK GROUP

1. Establish, publish, and maintain a Membership List to Forum (preferably via Email).

2. Define work project (including statement of work, project timeline, deliverables - using ANSI PINS form), circulate and reach agreement on project sheets within the next two weeks.

3. Establish *AD HOC* groups to work projects, as necessary.

4. Publish status reports (output via Email), due monthly.

5. Use CTIA (SciTech) as communications/coordination/focal point.

6. Strive for representation from each of the four interest groups:
   - Wireless Industry (phone manufacturers and WSP carriers),
   - TTY Equipment Manufacturers for Service Providers and Consumers
   - Service Providers (9-1-1 and Relay)
   - Consumer Groups (Deaf and Hearing/Speech Impaired)

7. Provide adequate notice of scheduled meetings.