VII. CONCLUSION

41. GE is well suited to conduct this test. GE is both a lighting manufacturer-marketer and through its ownership of the National Broadcasting Company, a broadcast licensee of WNBC-TV, New York; WMAQ-TV, Chicago; KCNC-TV, Denver; KNBC-TV, Los Angeles; WTVJ(TV), Miami; and WRC-TV, Washington. NBC also distributes news and other programs to television stations. GE, therefore, has a major interest in protecting the interests of its own stations and of its network affiliates, many of whom own both TV and radio stations. It is in GE's self-interest to ensure that the development of RF lighting does not harm the communications industry or its users. In addition, GE's experience as a leading manufacturer and marketer of lighting technology assures an adequate test of international standards in the U.S. market.

42. This request represents a balanced and yet practical way to develop a new technology, promising major benefits to the public and the nation while protecting the interests of the communication and broadcast communities. If, as experience suggests, there will be no significant interference from these devices, manufacturers will be able to make less-costly products, increasing market acceptance and, as desired by the Administration, further reducing energy consumption.

WHEREFORE, General Electric Company respectfully requests a waiver of 47 CFR § 18.307(c) subject to the terms and conditions described herein.

GENERAL ELECTRIC COMPANY

By: _____
George E. Hawranko

GENERAL ELECTRIC COMPANY
Lighting Legal Operation
Nela Park
Cleveland, OH 44112
(216) 266-8649

By: _____
Donald Zeifang

Its Attorneys

BAKER & HOSTETLER
1050 Connecticut Avenue, N.W.
Suite 1100
Washington, D.C. 20036
(202) 861-1500

Date: Nov. 15, 1994

EXHIBIT LIST

Exhibit 1	CFL Products
Exhibit 2	EFL Products
Exhibit 3	Energy Impact Rationale, Based on Market Projection and Improved Ability to Penetrate Target Sockets
Exhibit 4	Environmental Impact Rationale
Exhibit 5	Energy Impact/Implications of the Waiver Petition
Exhibit 6	Waiver Implications of the Energy Policy Act of 1992
Exhibit 7	Summary: EFL Economic Comparison
Exhibit 8	EFL Economic Comparison*
Exhibit 9	Summary of Waiver Product Volume Build Over the Projected Waiver Period*
Exhibit 10	Economies of Scale Associated with the Build Up of Production Volume*
Exhibit 11	Summary of Interference Complaints from RF Compact Fluorescent Products
Exhibit 12	DS&G: Interference Study Performed on the Electrodeless Compact Fluorescent Lamp
Exhibit 13	DS&G Interference Study Summary
Exhibit 14	EFL Product Line
Exhibit 15	Plans for 92 dB Test

---

* Pursuant to 47 C.F.R. §§ 0.457(d), 0.459, GE has filed this exhibit as confidential commercial information and requests confidential treatment.

BEFORE THE

FEDERAL COMMUNICATIONS COMMISSION

WASHINGTON, D.C. 20554

Petition of	)	
	)	
General Electric Company	)	File No.
	)	
For Waiver of 47 CFR § 18.307(c)	)	

DECLARATION OF EDWARD M. YANDEK

1. Edward M. Yandek, for his declaration, states as follows: I have personal knowledge of the facts contained herein and am competent to attest thereto. I am a resident of the State of Ohio.

2. I am the manager of industry standards for the Lighting Technology Division of General Electric Company, 1975 Noble Road, Nela Park, Cleveland, Ohio 44112. I exercise various responsibilities for the implementation of the General Electric Electrodeless Fluorescent Light, as described in the Petition to which this Declaration is attached.

3. With the exception of promotional materials attached for illustrative purposes, Exhibits 3, 4, 5, 6, 9, 10, 11, 14 and 15 were prepared by me or at my direction.

4. To the best of my information and belief, the facts stated in these Exhibits and in accompanying promotional materials are true and correct.

I declare under penalty of perjury under the laws of the United States of America that the foregoing is true and correct.

Executed on Nov 30, 1994

Edward M. Yandek

BEFORE THE

FEDERAL COMMUNICATIONS COMMISSION

WASHINGTON, D.C. 20554

Petition of	)	
	)	
General Electric Company	)	File No.
	)	
For Waiver of 47 CFR § 18.307(c)	)	

DECLARATION OF MICHAEL M. MINARCZYK

1. Michael M. Minarczyk, for his declaration, states as follows: I have personal knowledge of the facts contained herein and am competent to attest thereto. I am a resident of the State of Ohio.

2. I am a Development Engineer - Electronics for the Lighting Technology Division of General Electric Company, 1975 Noble Road, Nela Park, Cleveland, Ohio 44112. I exercise various responsibilities for the implementation of the General Electric Electrodeless Fluorescent Light, as described in the Petition to which this Declaration is attached.

3. With the exception of promotional materials attached for illustrative purposes, Exhibits 2, 7, 8, 12 and 13 were prepared by me or at my direction.

4. To the best of my information and belief, the facts stated in these Exhibits and in accompanying promotional materials are true and correct.

I declare under penalty of perjury under the laws of the United States of America that the foregoing is true and correct.

Executed on _____

_____
Michael M. Minarczyk

Exhibit 1

EXHIBIT 1

FIRST GENERATION CFL PRODUCTS

The following product specification bulletins are illustrative of today's First Generation CFL technology and products. These products deliver significant energy savings and pollution avoidance benefits compared against incandescent alternatives. Accordingly, these products, and similar products by other manufacturers, represent continued value and benefit to customers and the nation as a whole. Second Generation product technology is a logical progression from the products presented here, and would not have been possible to develop without the evolution of the technology and manufacturing experiences gained from the current generation of offerings. These and similar products will still serve the market for many years while advanced technology products, as covered under this waiver petition, are developed and commercialized.

See the following Attachments:

- GE Electronic Triple Biax (TM) Lamps
  GEL 203-31059R (1/94)
- GE Biax (TM) Electronic Lamps
  GEL 203-11079 (1/92)
- GE Electronic Double Biax (TM) Lamps
  GEL 203-31046 (4/93)
- Compax (TM) Fluorescent Lamps
  GEL 203-01107 (1/92)

Exhibit 2

Exhibit 2

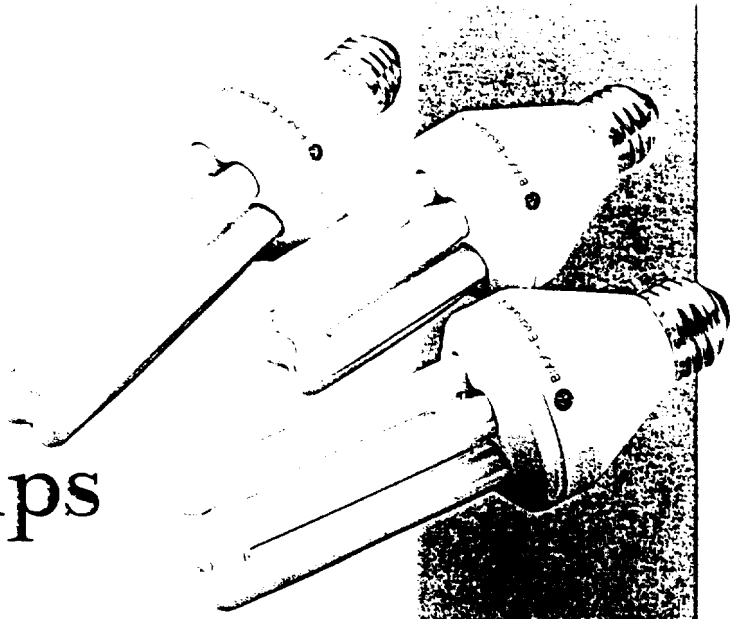

GE Electronic Triple Biax™ Lamps

Compact to fit many applications.
Replaces popular wattage incandescent bulbs.

- **Three wattages replace 60, 75 and 90 watt bulbs**
  Available in 15-, 20-, and 23-watt sizes replacing 60-, 75- and 90-watt incandescent bulbs.
- **Compact, lightweight**
  GE has designed these short (6.0" to 6.9" long), lightweight (4-5 ounces) lamps to meet your application needs.
- **Reduce electric costs by 71-75%**
  Replaces 60-, 75-, and 90-watt (energy saving) incandescent bulbs with GE Triple Biax lamps and save from $36.00 to $59.00* in energy costs (8¢ per KWH over lamp life).
- **Easy replacement of incandescent bulbs**
  GE's Electronic Triple Biax lamps screw directly into standard incandescent sockets. No adaptors or extra wiring needed.
- **Long 10,000 hour life**
  All GE Electronic Biax lamps last an average of 10,000 hours. That's 10-13 times longer than the incandescent bulbs they replace.
- **Excellent color**
  Rare earth phosphors create a warm incandescent-like atmosphere (2700K) with excellent color rendering (82 CRI).
- **Flicker free**
  No annoying flicker during start up.
- **Use in any position, indoors or outdoors**
  15-, 20-, and 23-watt lamps can be used in any position, indoors or outdoors. When used outdoors, use only in enclosed fixtures. Minimum starting temperature: -10°F (-23°C).

APPLICATIONS

- Table Lamps
- Down Lighting
- Corridor Lighting
- Wall Sconces
- Post Lighting
- Residential
- Office
- Hotel/Motel
- Industrial
- Restaurant
- Retail

* $3 per KWH over lamp life, 15-watt Biax, 10000 hours life, 900 lumens compared to 60-watt standard bulb, 1000 hour life, 870 lumens.
* $3 per KWH over lamp life, 20-watt Biax, 10000 hours life, 1200 lumens compared to 75-watt standard bulb, 750 hour life, 1190 lumens.
* $3 per KWH over lamp life, 23-watt Biax, 10000 hours life, 1500 lumens compared to 90-watt Watt-Miser bulb, 750 hour life, 1540 lumens

GE Electronic Triple Biax™ Lamps

GE Electronic Triple Biax™ Lamp Performance Comparison**

Existing Incandescent Lamp	Electronic Triple Biax Lamp	Watts Saved	Lamp Life	Initial Lumen Comparison	Energy Savings Over Life*		
					(8¢/KWH)	(10¢/KWH)	(12¢/KWH)
60-watt standard	15-watt	45	10,000	825 vs. 865 (-5%)	$36.00	$45.00	$54.00
75-watt standard	20-watt	55	10,000	1200 vs. 1190 (+1%)	$44.00	$55.00	$66.00
90-watt Watt-Miser	23-watt	67	10,000	1520 vs. 1540 (-1%)	$53.60	$67.00	$80.40
100-watt standard	23-watt	77	10,000	1520 vs. 1730 (-12%)	$59.20	$74.00	$88.80

**at 8¢ per KWH over lamp life, national average utility rate*

Product Summary**

Product Ordering Code	Description	Nominal Watts	Initial Lumens	Rated Avg. Life (3 hrs. per Start)	CRI	Color Temp	Min. Starting Temp
10406	FLE15TBX/SPX27	15	825	10,000	82	2700K	-10°F
10262	FLE20TBX/SPX27	20	1200	10,000	82	2700K	-10°F
23581	FLE23TBX/SPX27	23	1520	10,000	82	2700K	-10°F

*** Data based on engineering estimates*
FLE15TBX/SPX27 available 2nd Qtr '94.

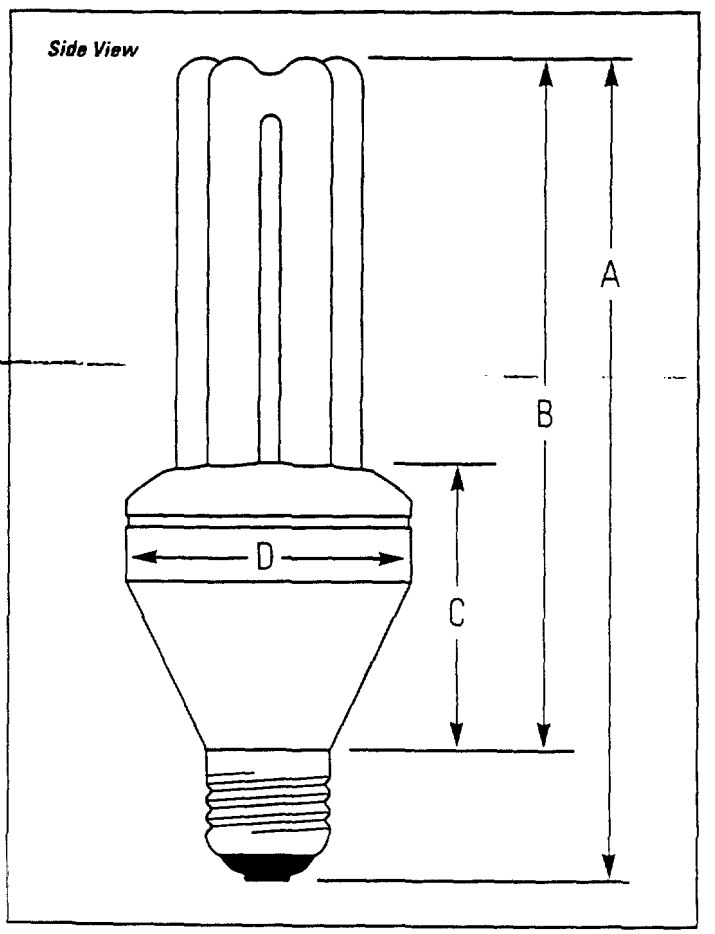

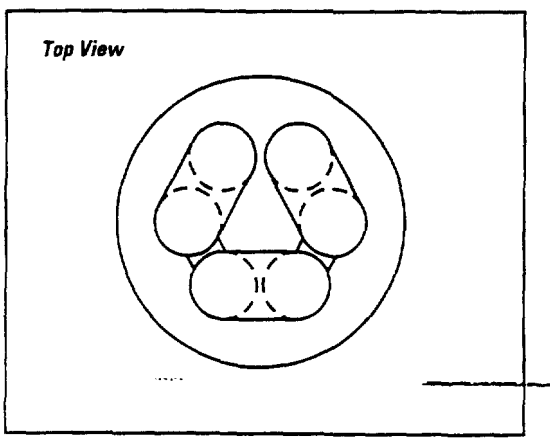

Lamp Dimensions (Inches)

Lamp Type	A	B	C	D
FLE15TBX/SPX27	6.0"	4.9"	2.3"	2.3"
FLE20TBX/SPX27	6.6"	5.5"	2.3"	2.3"
FLE23TBX/SPX27	6.9"	5.8"	2.3"	2.3"

Notes:

- *Use only on 120V circuits*
- *Do not use on dimming circuits, electronic timers or photocells*
- *When used outdoors, use only in enclosed fixtures above -10° F (-23° C)*
- *Meets all applicable FCC Regulations*
- *UL listed, CSA approved*

GE Lighting

203-31059R (1/94)

GE Biax™ Electronic Lamps

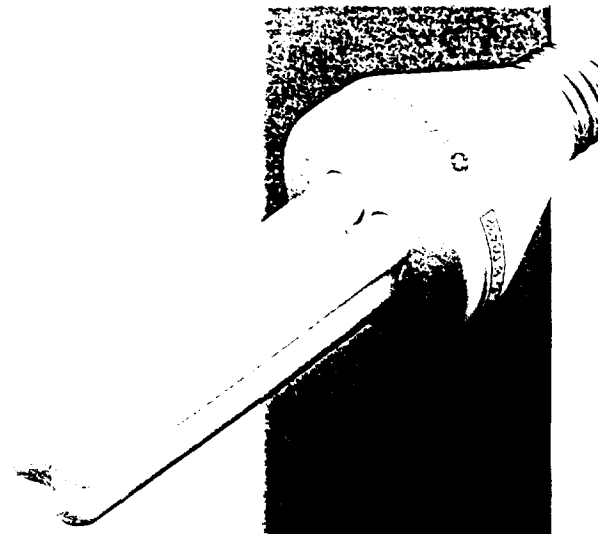

- **Reduce electric costs by 73-75%**
  Now, replace 60 and 75 watt incandescent bulbs and reduce your energy costs by 73-75%, without giving up light. Save $36.00 in energy costs by replacing a 60-watt light bulb with a 15-watt Biax Electronic lamp. Save $44.00 in energy costs* when you replace a 75-watt bulb with a 20-watt Biax lamp.
- **Easy replacement of incandescent bulbs**
  Biax Electronic lamps weigh less than 4 ounces and screw directly into standard incandescent sockets. No adaptors or extra wiring needed. It's as simple as replacing a light bulb!
- **Light equal to standard incandescent bulbs**
  Thanks to advanced GE technology, you can get dramatic savings on your electric bill without giving up good lighting. In fact, 15- and 20-watt Electronic Biax lamps deliver slightly more light output than standard 60- and 75-watt incandescent bulbs, respectively.
- **Lasts 10,000 hours**
  The 15-watt ~~Biax Ele~~ctronic lamp lasts an average of 10 times longer than a standard 60-watt (1000 hr) bulb; the 20-watt lamp lasts over 13 times longer than a standard 75-watt (750 hr) bulb.
- **Excellent color**
  Rare earth triphosphors create a warm incandescent-like atmosphere (2700K) with excellent color rendering (82), making furnishings and people look their best. Color so true and natural, you won't believe it's fluorescent.
- **UL listed for use in any position, indoors or outdoors**
  When used outdoors, use only in enclosed fixtures. Minimum starting temperature: 0°F.

- *Table Lamps*
- *Down Lighting*
- *Corridor Lighting*
- *Wall Sconces*
- *Post Lighting*

- *Residential*
- *Office*
- *Hotel/Motel*
- *Industrial*
- *Restaurant*
- *Retail*

GE Biax™ Electronic Lamp Performance Comparison

Existing Incandescent Lamp	Electronic Biax Lamp	Watts Saved	Lamp Life	Initial Lumen Comparison	Energy Savings Over Life		
					(8¢ KWH)	(10¢ KWH)	(12¢ KWH)
60-watt A-Line	15w	45	10x	900 vs 855 (— 5%)	$36.00	$45.00	$54.00
75-watt A-Line	20w	55	13x	1200 vs 1170 (— 2%)	$44.00	$55.00	$66.00

*8¢ per KWH over average rated life

GE Biax™ Electronic Lamps

Product Summary

Ordering Code	Description	Nominal Watts	Initial Lumens	Mean Lumens (@ 40% Life)	Rated Avg. Life (3 hrs per start)	CRI	Color Temp.	Min. Start Temp.
20792	FLE15DBX/SPX27	15	900	765	10,000	82	2700K	0°F
20793	FLE20DBX/SPX27	20	1200	1020	10,000	82	2700K	0°F

Standard Pkg. Quantity: 6

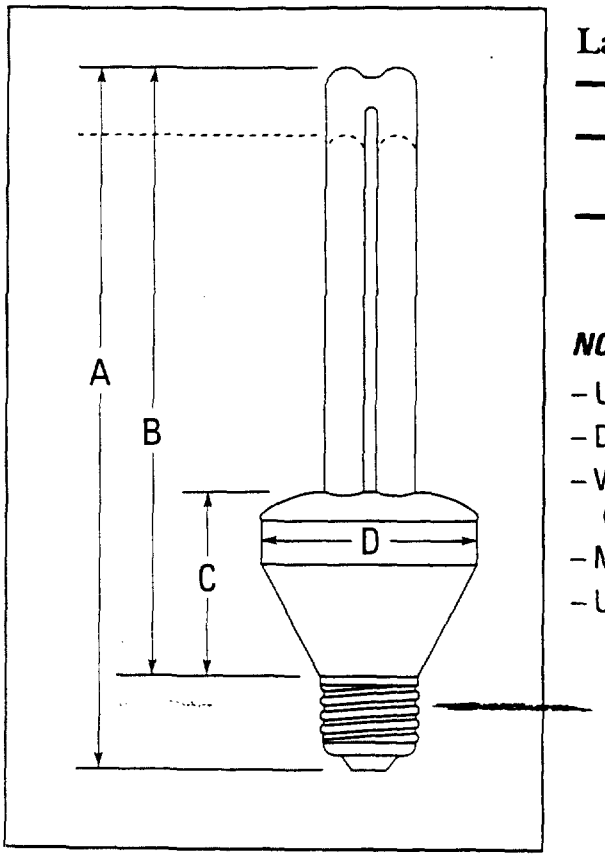

Lamp Dimensions (Inches)

Lamp Type	A	B	C	D
FLE15DBX/SPX27	6.9	5.8	1.8	2.3
FLE20DBX/SPX27	8.1	7.0	1.8	2.3

NOTES:

- Use only on 120V circuits.
- Do not use on dimming circuits.
- When used outdoors, use only in enclosed fixtures above 0°F.
- Meets all applicable FCC regulations.
- UL Listed.

GE Lighting

203-11079 (1/92)
PRINTED IN U.S.A.

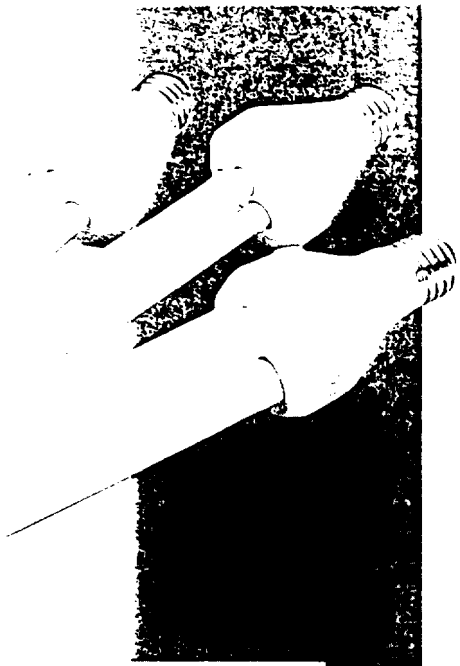

GE Electronic Double Biax™ Lamps

15-, 20-, 26-watt replace incandescent bulbs for up to 75% energy cost savings, longer life, excellent color.

- **Reduce electric costs by 71-75%***

  Now, replace 60-, 75- and 90-watt (long life) incandescent bulbs and reduce your energy costs by as much as 75%, without giving up light. Save $36.00 to $51.20* in energy costs just by changing a light bulb!

- **Easy replacement of incandescent bulbs**

  GE's Electronic Double Biax lamps weigh only 4-6 ounces and screw directly into standard incandescent sockets. No adaptors or extra wiring needed. It's as simple as replacing a light bulb!

- **More light output than incandescent bulbs**

  Thanks to advanced GE technology, you can achieve dramatic savings on your electric bill without giving up good lighting. In fact, 15- and 20-watt Electronic Biax lamps deliver slightly more light output than standard 60- and 75-watt incandescent bulbs, respectively. The 26-watt lamp provides more light than a 90-watt long life incandescent bulb.

- **Lasts 10,000 hours**

  The 15- and 20- watt Biax Electronic lamps last an average of 10-13 times longer than standard bulbs. The 26-watt lamp lasts 13 times longer than standard 100-watt incandescent bulbs.

- **Excellent color**

  Rare earth phosphors create a warm incandescent-like atmosphere (2700K) with excellent color rendering (82), making furnishings and people look their best. Color so true and natural, you won't believe it's fluorescent!

- **UL listed**

  – 15-watt and 20-watt lamps can be used in any position, indoors or outdoors. When used outdoors, use only in enclosed fixtures. Minimum starting temperature: -10°F (-23°C).

  – 26-watt lamp is listed for indoor use in open fixtures.

- *Table Lamps*
- *Down Lighting*
- *Corridor Lighting*
- *Wall Sconces*
- *Post Lighting*

- *Residential*
- *Office*
- *Hotel/Motel*
- *Industrial*
- *Restaurant*
- *Retail*

GE Electronic Biax™ Lamps Performance Comparison

Existing Incandescent Lamp	Electronic Biax Lamp	Watts Saved	Lamp Life	Initial Lumen Comparison	Energy Savings Over Life		
					(8c KWH)	(10c KWH)	(12c KWH)
60-watt standard	15w	45	10x	900 vs 870 (-3%)	$36.00	$45.00	$54.00
75-watt standard	20w	55	13x	1200 vs 1190 (-1%)	$44.00	$55.00	$66.00
90-watt Long Life	26w	64	4x	1500 vs 1360 (-10%)	$51.20	$64.00	$76.80
100-watt standard	26w	74	13x	1500 vs 1750 (+14%)	$59.20	$74.00	$88.80

*Based on 3 hours per day with Biax lamp vs. 100 hours average life rate

GE Electronic Double Biax™ Lamps

Product Summary

Ordering Code	Description	Nominal Watts	Initial Lumens	Mean Lumens (@ 40% Life)	Rated Avg. Life (3 hrs per start)	CRI	Color Temp.	Min. Start Temp.
20792	FLE15DBX/SPX27	15	900	765	10000	82	2700K	-10° F
20793	FLE20DBX/SPX27	20	1200	1020	10000	82	2700K	-10° F
21046	FLC26	26	1500	1275	10000	82	2700K	32°F

Standard Pkg. Quantity: 6

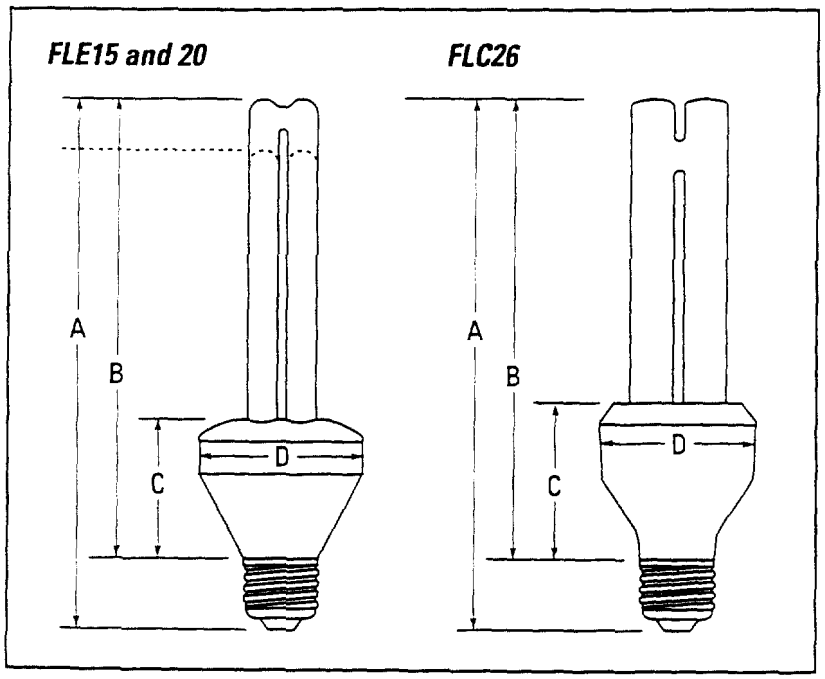

Lamp Dimensions (Inches)

Lamp Type	A	B	C	D
FLE15DBX/SPX27	6.9	5.8	1.8	2.3
FLE20DBX/SPX27	8.1	7.0	1.8	2.3
FLC26	8.0	7.0	2.2	2.3

NOTES:

- *Use only on 120V circuits.*
- *Do not use on dimming circuits, electronic timers or photocells.*
- *When used outdoors, use only in enclosed fixtures above -10°F (-23°C).*
- *Meets all applicable FCC regulations.*
- *UL Listed.*

GE Lighting

203-31046 (4/93)

GE Lighting

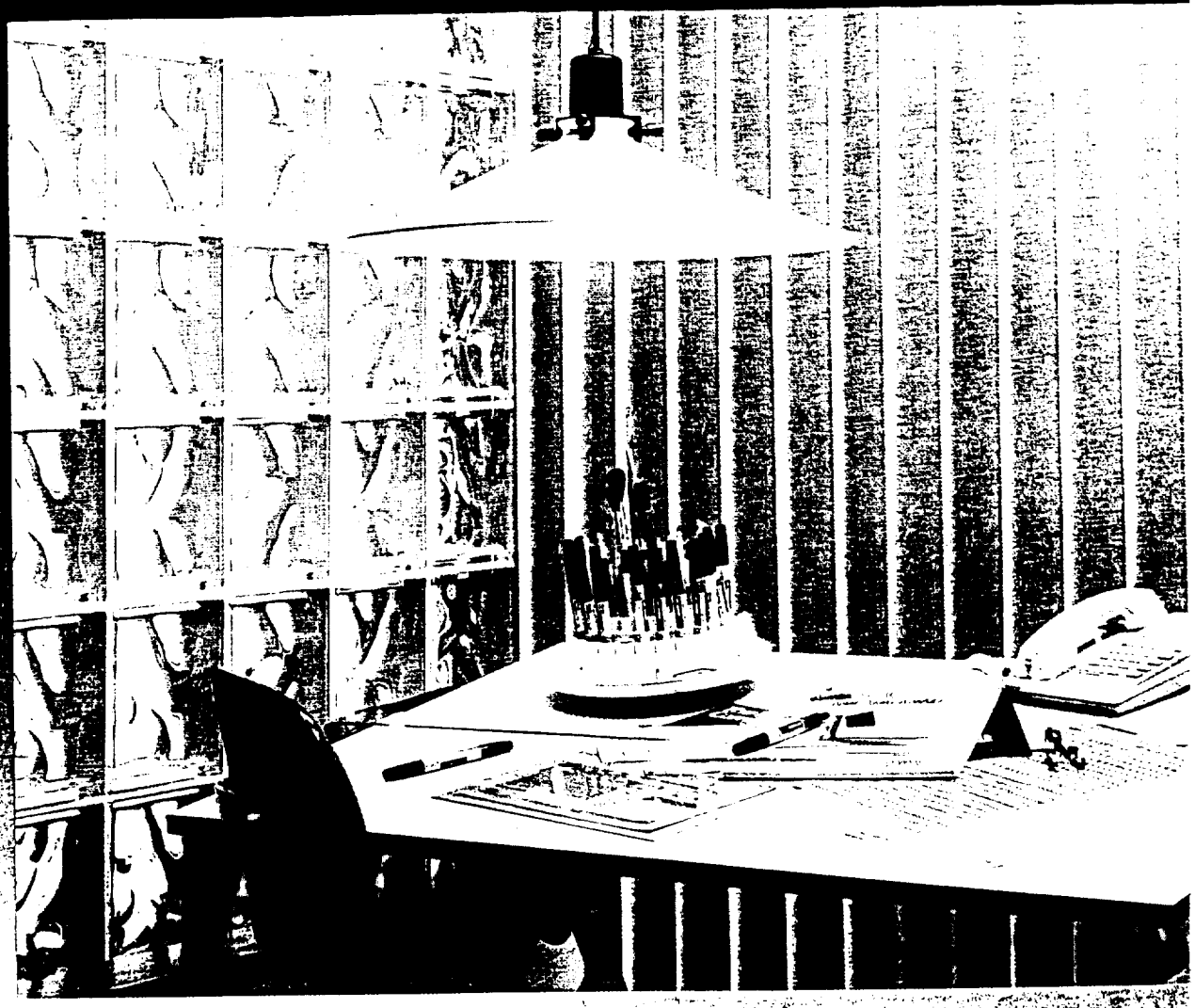

Compax™ Fluorescent Lamps

Replaces 40 and 60 watt light bulbs. Saves up to 75% in energy dollars.

Compax™ Fluorescent Lamps

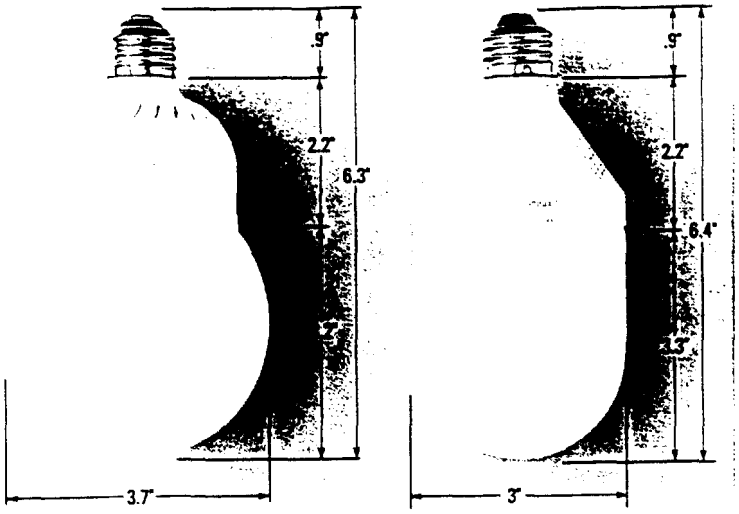

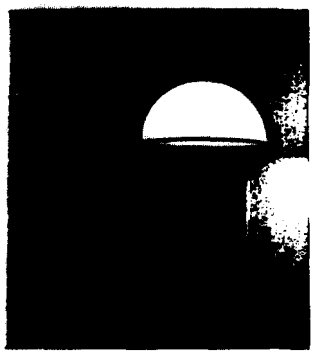

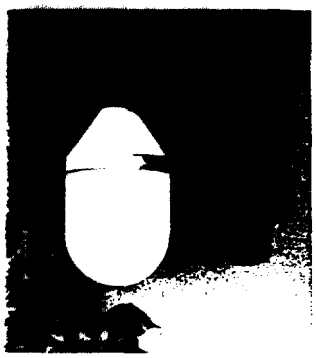

Specially designed for simple replacement of conventional light bulbs.

The Compax fluorescent lamp is a simple, energy-efficient, long life replacement for incandescent light bulbs. The one-piece lamp and ballast combination is designed to screw into most incandescent sockets to save electricity costs and give you the light you need.

Energy efficient - cuts lighting electricity costs 62% - 75%.

The Compax fluorescent uses only 15 watts. Replace a 60-watt bulb and save $32.40 in energy costs over the life of the lamp (at 8¢ per KWH).

Long life - 9,000 hours.

The Compax lamp lasts 9 times longer than a standard 40 or 60-watt incandescent bulb. You save money with fewer replacement bulbs and reduced labor costs.

Warm, incandescent-like color.

The Compax lamp ballast combination screws into a standard medium-base incandescent socket, and provides a warm color (2800k) that blends well with incandescent bulbs.

Application Recommendations

- May be used in any position.
- If used outdoors, lamps must be protected from rain and snow.
- Use in enclosed fixtures may shorten life.
- Do not use on dimming circuits.
- Minimum starting temperature is 32°F.

Savings with Compax™ Fluorescent Lamps vs. Standard Incandescent

Incandescent Lamps	Compax Fluorescent Lamps	Watts Saved*	Lamp Life	% Light Output†	Annual** Energy Savings $
40 Watt	15 Watt	25	9x longer	+ 39%	$ 6.00
60 Watt	15 Watt	45	9x longer	− 20%	$10.80
60 Watt Replacement Long Life Energy Saver	15 Watt	37	7x longer	Equal	$ 8.88

*Includes Ballast Watts
**3000 hrs @ 8 cents/KWH
†Incandescent lamp lumens: 40W — 505; 60W — 870; 60W Long Life Energy Saver — 700.

Code	Lamp Description	Appearance	Base	Nominal Watts*	Initial Lumens	Voltage
14524	FLB15/TL	Bullet Shaped	Medium	15	700	120 @ 60 Hz
14525	FLG15/A	Globe Shaped	Medium	15	700	120 @ 60 Hz

*Nominal line current at 120 volts is .24 amps

GE Lighting

203-01107 1/92
Printed in U.S.A

EXHIBIT 2

EFL PRODUCTS

EFL System Operation

1. System Overview

A new generation of lighting products is being developed to replace the short life, highly-inefficient incandescent lamp. Fluorescent lighting technologies have developed into three major categories: Linear, Compact, and Electrodeless. The newest of the technologies, the Compact Fluorescent Lamp (CFL) and the Electrodeless Fluorescent Lamp (EFL) have the potential to replace nearly all household and commercial applications of the incandescent lamp due to their compact size, excellent color and long life.

Compact and Electrodeless lamps have some design similarities and share many fundamental performance attributes. Table 1 presents the performance and cost tradeoffs for the products.

TABLE 1

Parameter	Electrodeless Fluorescent	Compact Fluorescent
Lumens	1200	1200
Input Power	23W	20W
Lumens/Watt	52	60
Life	20,000 Hrs. +	10,000 Hrs.
Color Temperature	2700° K	2700° K
Price	$15 - $20	$12

The major cost differential in the two lighting systems is in the components and material necessary to contain the EMI of the devices. The level and cost of this containment is directly tied to the specific regulatory limits to which the product must conform.

2. Technical Comparisons

A CFL and an EFL operate in a similar mode. Both of the products are low pressure mercury (Hg) discharges that use a phosphor coating on the walls of the lamp. The phosphor coatings convert the high energy ultraviolet radiation of the Hg discharge to visible light.

The efficacy, luminous output per unit of input wattage, of a fluorescent lamp is largely dependent on the internal pressure inside the lamp. Thus, to achieve a lamp with high efficacy the internal pressure on the lamp must be maintained near the optimum pressure.

The traditional construction of Linear and CFLs has been in extending the lamp length or diameter to maintain the optimum pressure during operation. The result is lamps that are many feet long with 1 inch diameters to dissipate 20 to 80 watts. CFLs use this same method to control the pressure. The lamp length is folded in a serpentine fashion to minimize the length and reduce the size. This technique works well for products of 20 watts or less having eight or fewer bends.

CFLs that would provide the equivalent light of a 150 W incandescent, 2500 lumens, could not be "compacted" enough to maintain the optimum pressure to provide an efficient and stable light source. In contrast, EFLs can be made to operate efficiently at high power levels, due to their large internal volume and ability to dissipate the heat losses. Thus, Compact Fluorescent technology, for high lumen products, cannot compete with the high lumens and broad compact profile of Electrodeless lamps. To universally replace the incandescent lamp with a fluorescent product, it will need to fit into nearly the same space. The CFL has not satisfied this requirement.

A major technical difference in the design of the EFL is the lack of cathodes enabling a doubling of the life of the lamp. Removing the cathodes eliminates the most predominant wear-out mechanism in a fluorescent lamp.

Containment of the higher frequency RF electrostatic and magnetic fields is a major technical hurdle for EFLs. Shielding the radiated and conducted noise requires the use of expensive and elaborate materials in places that impede the ability of the lamp to deliver visible light. CFLs operating at lower frequencies do not require these expensive EMI shields.

3. EFL Physical Description

The physical construction, (see Figure 1), of the EFL lamp consists of a Lamp and a Ballast Assembly. Each of these assemblies is unique in its design and construction to minimize conducted and radiated EMI. The lamp is designed in size and shape to closely match the incandescent lamp it replaces.

The Ballast Assembly, consisting of the AC/DC Converter and the RF Oscillator, is contained in the Edison Screw Base and a plastic housing residing above. The RF Oscillator and the AC/DC Converter are further contained within metal EMI shields.

The Lamp Assembly consists of the glass envelope containing the elements for the operation of the fluorescent lamp and the RF Coil that excites these elements to produce the arc plasma. The RF Coil resides in the middle, (within the Re-Entrant chamber), and through most of the height of the lamp. The majority of the stray radiated magnetic fields are produced by the RF Coil. These stray fields are contained by metal shields around and on the surface of the glass envelope.

4. Circuit Comparisons

As different as the lamps for Electrodeless and Compact Fluorescent are, the electronics required to operate the lamps are very similar in topology. (See Figures 2 & 3). The EFL and the CFL lamps both employ half bridge inverter topologies to drive a resonant circuit that in turn drives the lamp.

The first stage of the circuit uses a differential mode EMI filter to limit the conducted EMI and provide input transient protection. This stage is common to EFL and CFL lamps.

The next stage, moving right, provides the AC-DC conversion and voltage doubling. The split capacitor arrangement, in addition to providing the necessary energy storage, filters the high frequency EMI from conduction onto the AC line.

Approximately 350VDC is generated and filtered in this stage. This stage is also common to EFL and CFL lamps.

The half bridge drive circuit is the next stage. This circuit provides the 180 degree out of phase drive voltages for the transistor switches. The drive is the result of regenerative feedback from the current flowing in the tank circuit. The 180 degree phase shift and isolation is obtained through the gate drive transformer. The circuit oscillation is started by a voltage pulse generated by components in the starter circuits. The pulse is coupled into the gate of the upper transistor switch.

The next stage is the half bridge inverter. This stage drives the resonant tank circuit at a frequency of 50 to 100 kHz for CFL lamps, and at 2.2 to 2.8 MHz for EFL lamps. The resonant tank is unique for each lamp topology. The CFL circuit includes preheating of the lamp cathodes for a fixed time prior to starting the lamp. At this time, the Q of the circuit is shifted towards resonance as the cathodes heat. During this period, the lamp cathodes are heated sufficiently to provide an excess of free electrons to establish an arc. The tank circuit than "rings up" until the lamp discharge has transitioned to the arc mode. Once the lamp is in the arc mode, its impedance has changed which lowers the Q of the resonant

circuit and provides stable lamp operation through a current limiting of inductor within the tank circuit.

The EFL resonant tank is unique since it employs an RF coil to couple the RF energy to the lamp. This coil is placed in the middle of the lamp "re-entrant" chamber. The 2.6 MHz solenoidal magnetic field excites the Hg atoms resulting in a circular discharge within the lamp. There is no pre-heating of any nature due to the absence of cathodes (electrodes) in the lamp.

An EMI containment stage is present only in the EFL circuit. This circuit serves to re-deposit the radiated EM energy back into the lamp to limit the amount radiated. This stage includes interconnected metal shields and conductive coatings on the lamp to "collect" the radiated energy and circulate it within the ballast. Additional shields are placed near the lamp to prevent the coupling of the RF energy to nearby metal surfaces such as a recessed can type fixture.