Top Level Receiver Diagram

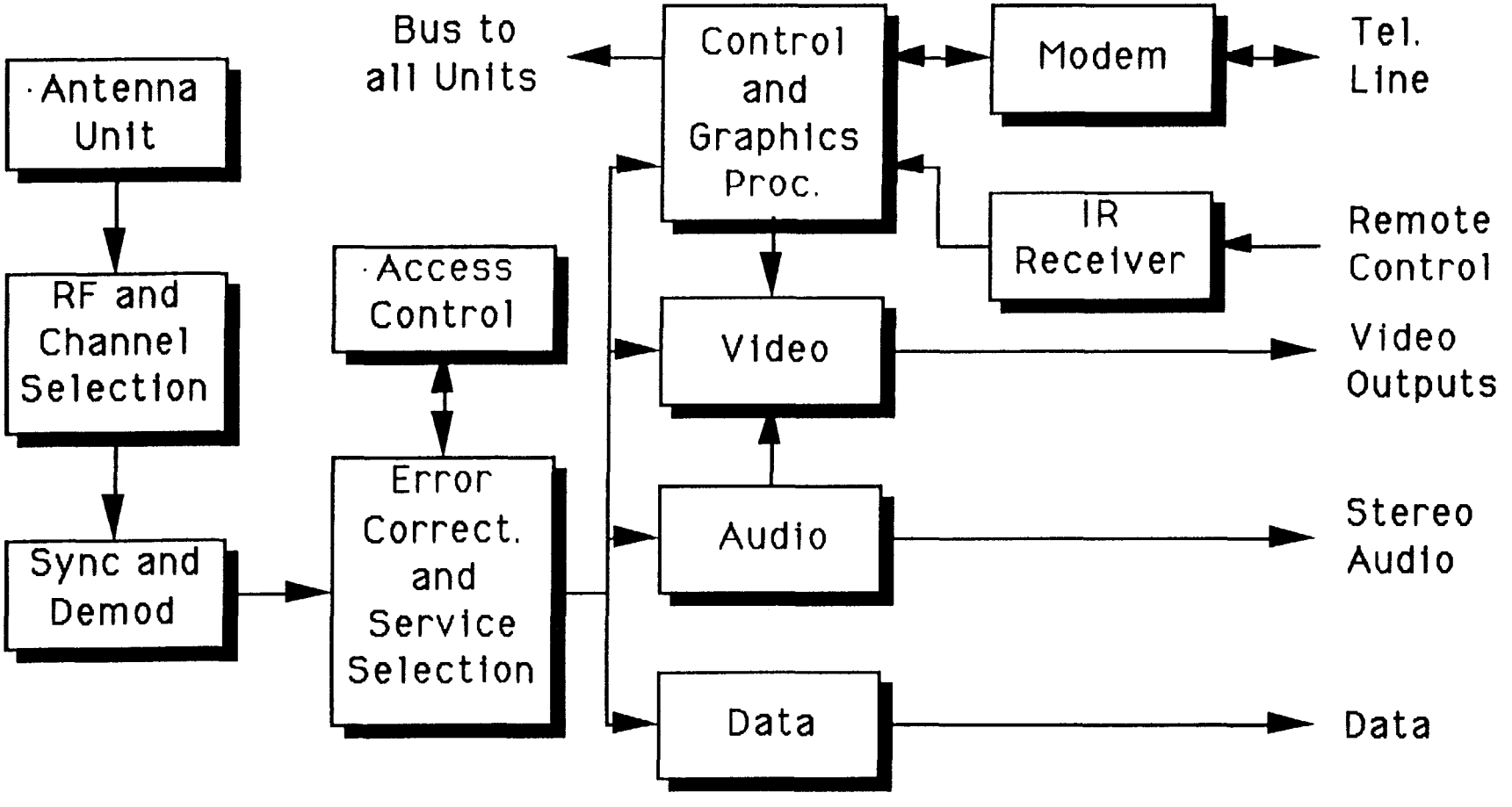

Video Section of Receiver

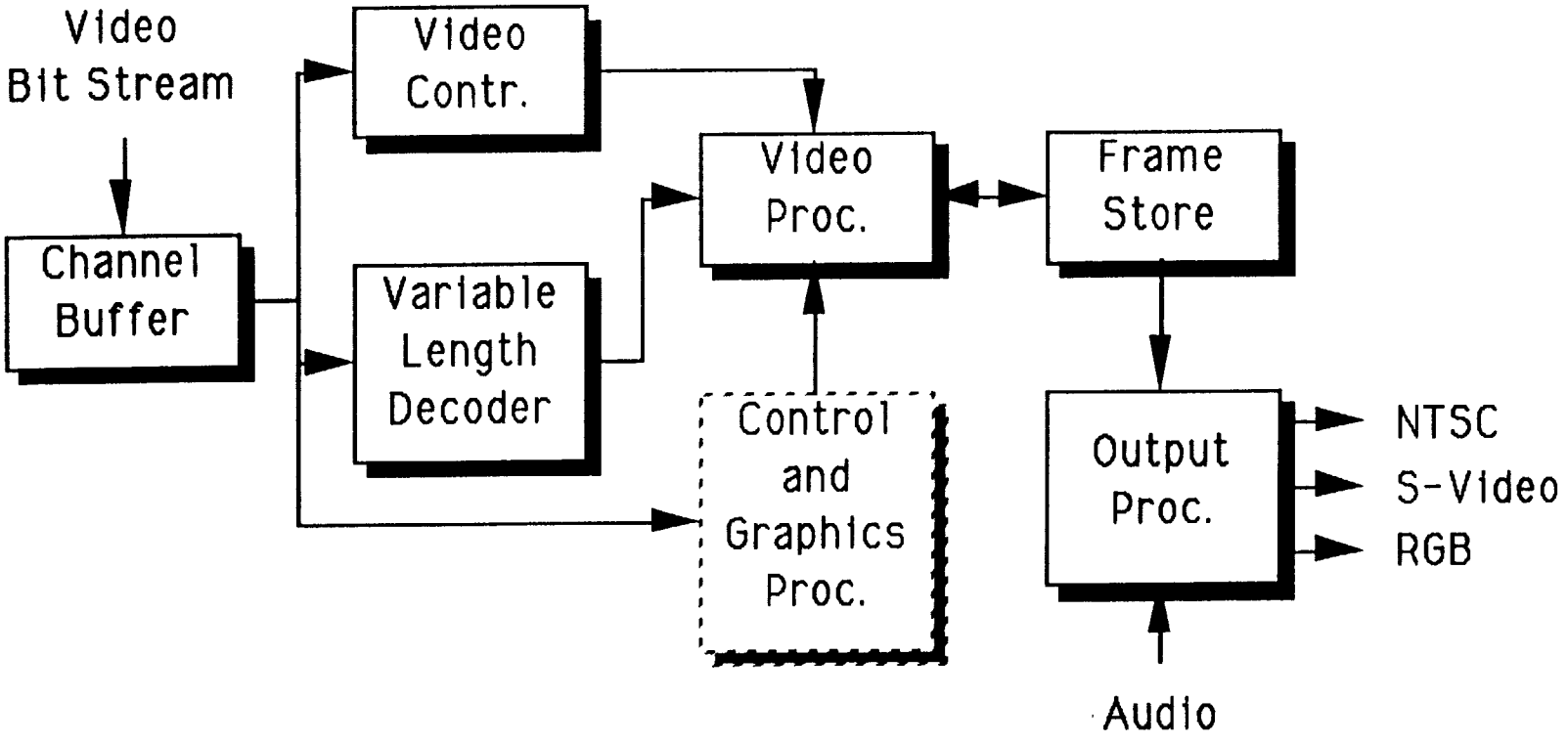

Variability of TV Data Rate

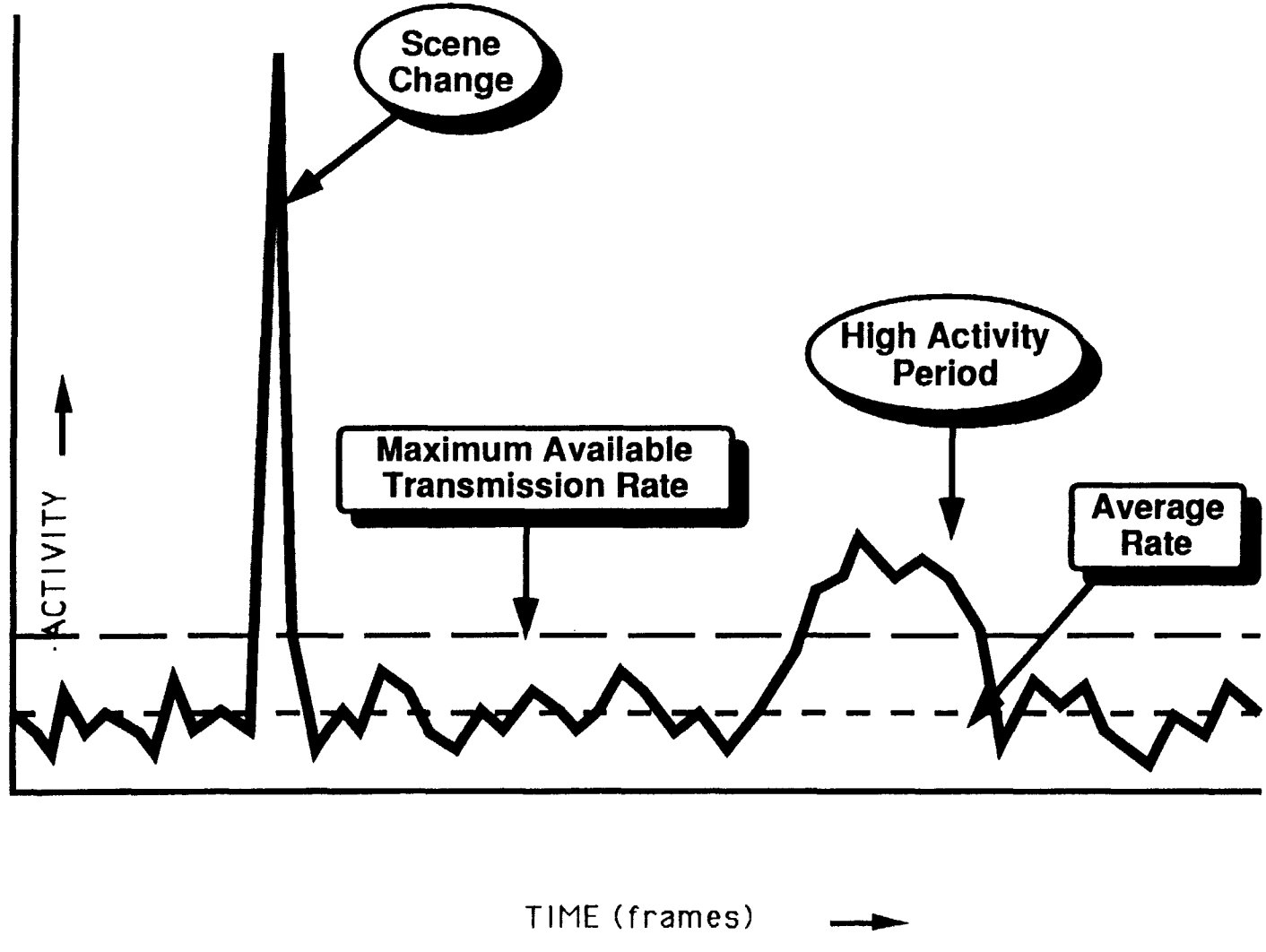

Flexible Transmission Subsystem

- Configuration, parameters, translation tables, and microcode will be downloaded from satellite to update algorithm as required
- Basic processing elements usable with several evolving video compression standards
- Predictive / interpolative algorithms using vector quantization, motion compensation, frame store(s), variable length code
- Dynamically variable image resolution, update rates, video placement, and video extant
- Extendible to HDTV

Satellite Channelization

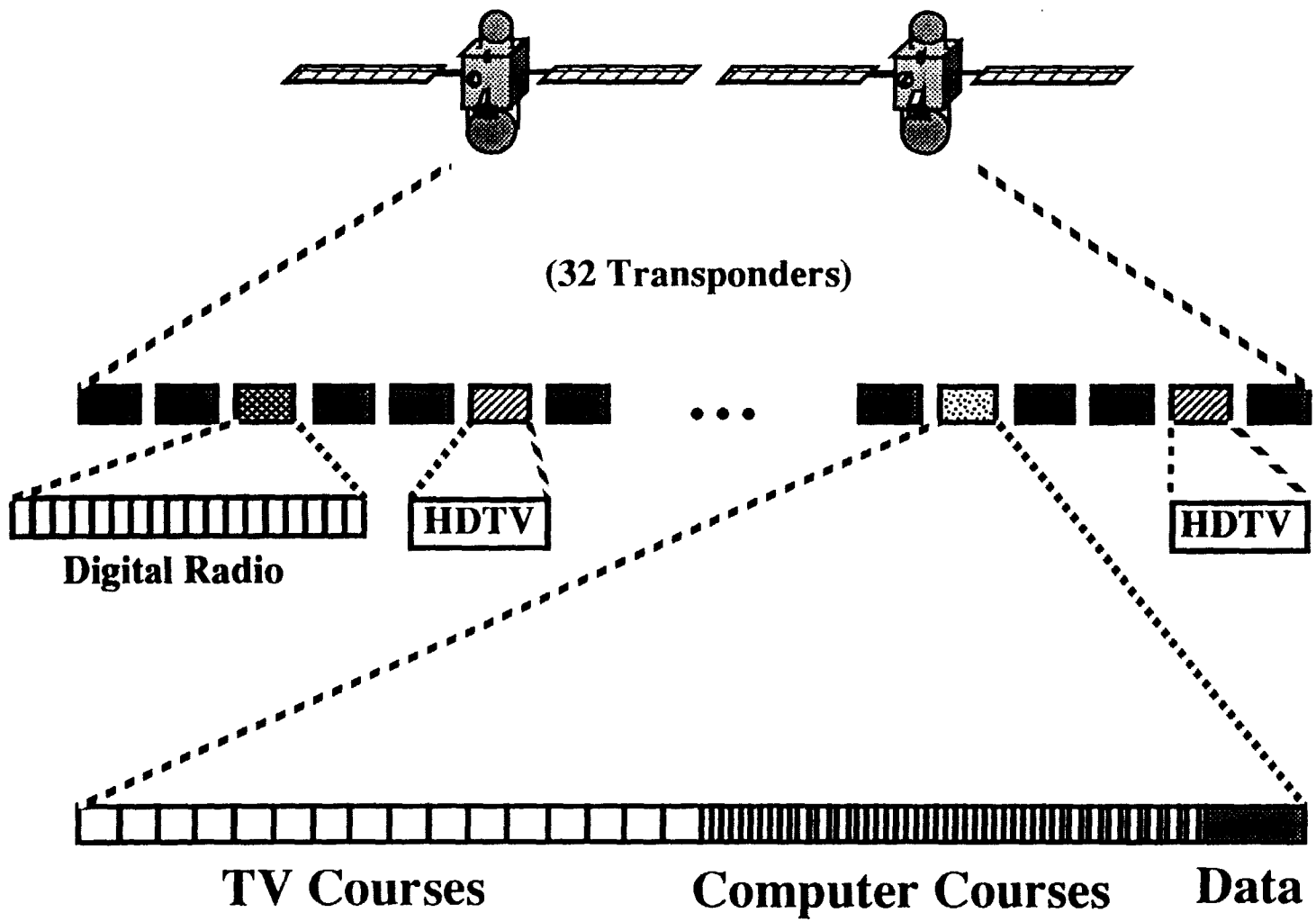

Operating System Software

- Assignment of individual services to particular transponders and (uplink) service groups
- Assignment and management of service transmission times and / or time windows
- Maintenance of service-index transmission and receiver database allowing receiver to locate authorized, requested services
- Dynamic allocation of service resources and individual uplink capacities
- Identification and selection of desired services
- Controls "Graphical User Interface" and its links to operating and service requests

Fast-Sync Digital Demodulator

- Requirement
  - Support remote uplinks to access market for geographically dispersed niche services
  - Maintain basic symbol synchronization for TDMA blocks
  - Refine/remember symbol sync & reacquire carrier sync <u>quickly</u> from short preambles
- Method
  - A proprietary, digitally-implemented symbol demodulator is patentable

Access Control

- Supports individual keys for each receiver and each service
- Uses DES-derivative encryption algorithm
- Supports impulse PPV market potential
- Can disable pirate units
- Very fast system rekey capability--minutes vs days by present methods
- Complete, virtually untamperable viewing record for billing, copyright separations, and piracy detection
- Verification/authentication via smart card or phone
- Patent protection for verification/authentication system

Video Compression

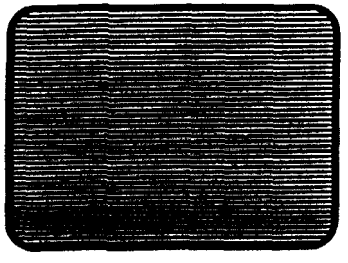

- Intra-Frame Techniques
  - Prediction
  - Estimation
  - Transforms
  - Quantization
  - Entropy

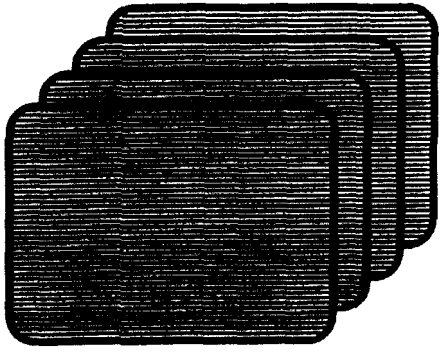

- Inter-Frame Techniques
  - Prediction
  - Subsampling
  - Conditional Replenishment
  - Motion Compensation

Graphics Subsystem

- Requirement

  - Intuitive, Graphic User Interface for selection requests, billing info, operational assistance, exploratory navigation, and use of new services

  - Windowing and overlay capability for different standards in text, graphics, animation, and video

  - Visual feedback for user input/control devices

  - Response to both user and received control events, interactive and real-time multitasking operations capability

- Method
  - Maximize use of local primitives in ROM such as Quickdraw, Postscript, and proprietary methods

Converging Technologies: Expanded Services & New Markets

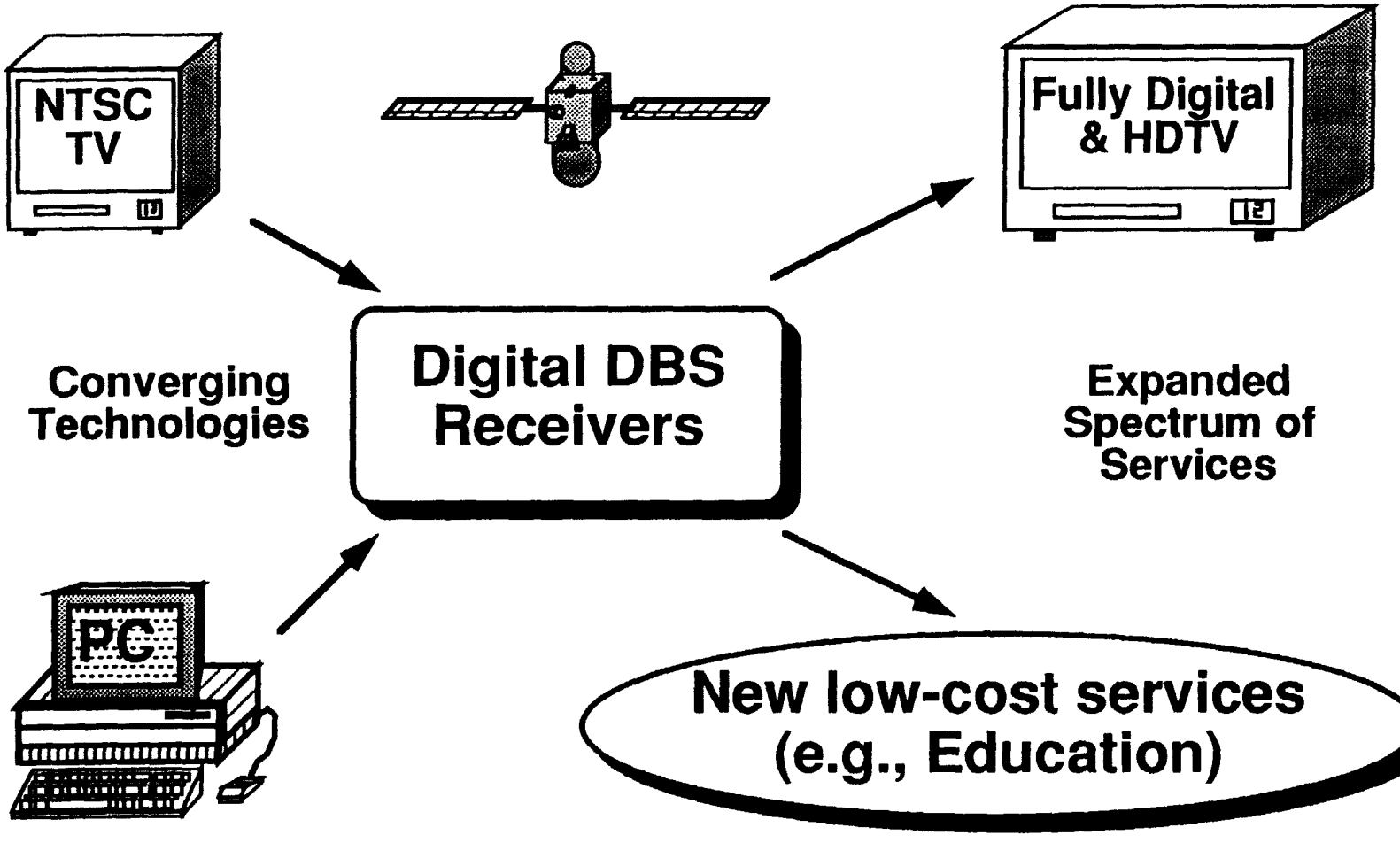

Market Entry Timing

1991	1992	1993	1994	1995	1996

Ku-band Transponders Improves Productivity

20,000 2nd year
Niche Market

Used in other devices, High Fidelity Radio, autos, aircraft, etc.

100,000 3rd year
Numerous niche applications

Digital DBS System: Education, TV Entertainment, Music, Electronic Publishing, Data, Telecommuting, HDTV, Others

600,000 1st year
Broad consumer market

growing to 1,000,000+ in each subsequent year

Incorporation into fully-digital TV sets and other devices

Market Entry Timing

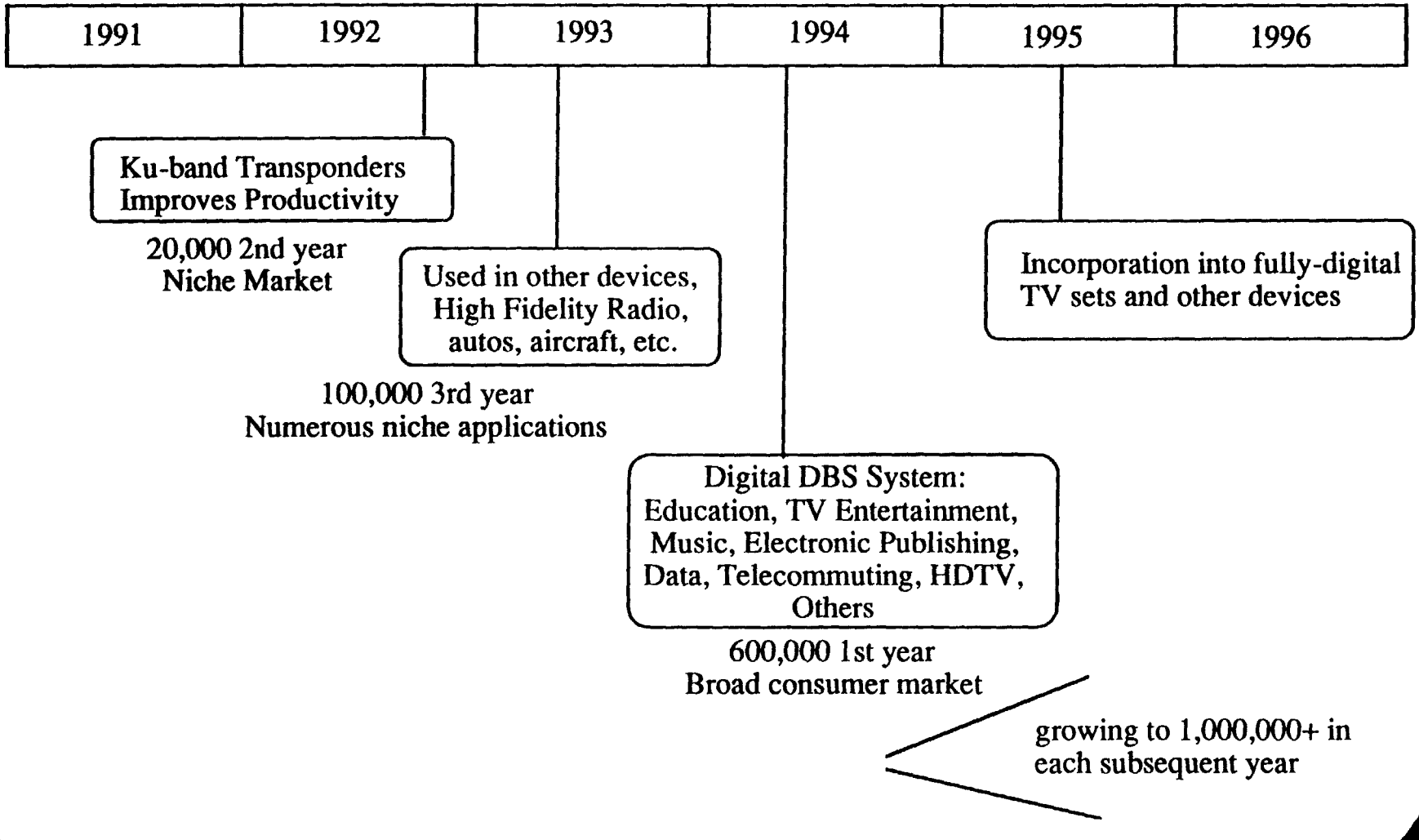

Market Strategy

- Design DBS receiver for maximum flexibility while holding manufacturing cost in mass consumer electronics market range
- License universal capability receiver design to selected manufacturers in US and abroad
- License digital demod & custom chip designs
- License transmission operating system to broadcasters
- Target TV manufacturers for marketing elements of the receiver design
- Keep royalty rate reasonable, target capability for standardization
- Seek selected joint ventures; adoption by foreign broadcast firms

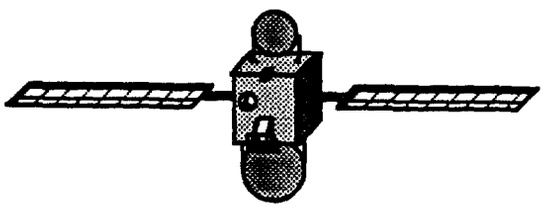

Request For Information for: a Digital DBS System

April 10, 1991

Advanced Communications Engineering, Inc.

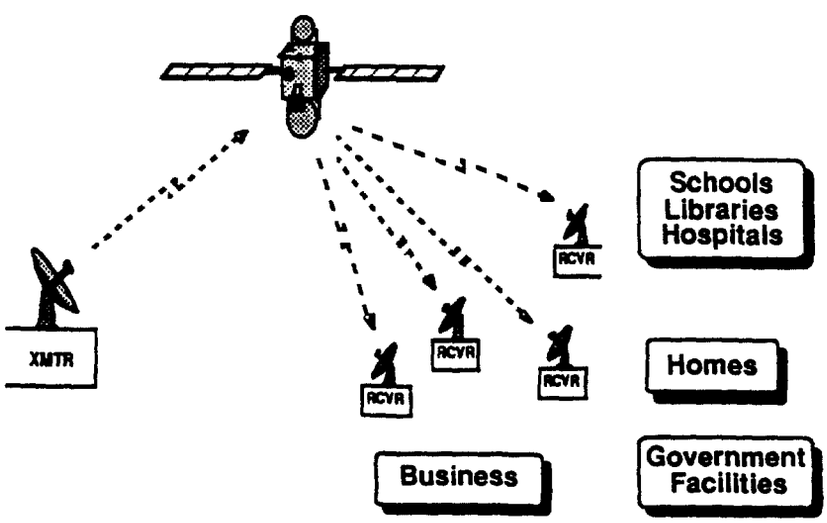

<<< Preliminary >>>

1.0 The ACC Scenario

ACC, founded in 1982, is a telecommunications company developing new high-power Direct Broadcast Satellite (DBS) services for delivery to the U.S. public starting in late 1993. Video programming and other innovative and unique services will provide a new level of quality and consumer value to the entire U.S. via ACC's flexible and addressable digital transmission and high-power transponders.

ACC's business includes the broadcast of:

- Channels of existing off-air programming and cable programs directly into homes on a monthly subscription basis;
- Specialized educational materials including integration with personal computers and receiver-imbedded microprocessors.
- More than 40 channels of Pay-Per-View movie programming, special events, and other narrowcast specialties.
- Extended services include CD-quality stereo music, electronic publishing, home shopping, and other innovations.

ACC holds a current, valid FCC permit for DBS satellite construction. Two 16-channel satellites, under contract with GE Astro Space, are scheduled for launch and operation at 110° West longitude in late 1993. ACC's current authority is for 16 transponders at 110° West and 16 transponders at 148° West. Authority for eleven additional transponders at these locations has been requested, for a total of 27 at each location. Operational authority for the remaining five at each location, if awarded, would provide the maximum 32 transponders at any one location. No other DBS permittee has more capacity than ACC.

Future plans include a transition to "split operation", utilizing two additional satellites at 148° West for coverage of the western half of CONUS, Hawaii, and Alaska. At the time of their operation, the 110° satellites' coverage would be switched on-orbit to eastern-half CONUS, Puerto Rico, and Virgin Islands. This permits doubling the satellite radiated power to the coverage area, and may more readily meet time-zone programming considerations.

Digital transmission, which ACC pioneered in its early FCC applications, is key to the provision of superior quality and services by allowing a single satellite transponder to carry multiple television

programs. The total of 32 allocated transponders at each satellite location could provide many more than 100 individual NTSC television programs. Initially, a high definition TV (HDTV) signal will occupy an entire transponder. As HDTV standards evolve, ACC's flexible system will easily accommodate them within its satellite bandwidth and power parameters.

We expect that the "front end" of the user receiver terminal can and should be standardized. The hardware design must support service marketing concepts of third-party manufacturers and/or programmers. This architecture should use a bus design for addition of future processors that may be unforeseeable now but will be vital to the flexibility and popularity of the receiver. The third party suppliers will provide product innovations to meet increasingly diverse customer demand.

This flexibility can be implemented either by hardware or downloaded software from the satellite into a properly-sized RAM and processor, or by a combination of both that takes logical advantage of the encryption and addressability features.

In this Request For Information (RFI), we outline the parameters of the ACC system and its signals, particularly where they involve the user terminal design. We invite responses that provide tradeoffs and candidate designs for a DBS user terminal. It should be possible to unify the needs of the various DBS operators such that standard user parameters can be developed, permitting entry of many manufacturers for cost-competitive, long-term production. ACC expects the DBS receivers to become a pervasive consumer electronic item of the 1990s, generating sales in the tens of millions of units.

2.0 System Requirements

The following set of system characteristics and requirements are presented to serve as a guideline for discussion. They are consistent with RARC guidelines and have conservative aspects we feel are necessary for a new telecommunications system. Respondents are invited to comment and propose alternatives.

2.1 Satellite Transponder and Signal Characteristics

1. Frequency range: 12.2-12.7 GHz, transponder 3-dB bandwidth of 24 MHz.

2. Polarization: Circular. Odd-numbered transponders: right hand circular (RHCP); Even-numbered: LHCP. Starting at Channel 1 at 12224.00

MHz, transponder center frequencies are assigned each 14.58 MHz to 12675.98 MHz, alternating polarizations starting with RHCP at Ch 1. The left-hand, even-numbered transponders are spaced higher by one half-channel (14.58 MHz). Transponders for the same polarization sense are spaced 29.16 MHz apart.

3. Transponder saturated traveling wave tube amplifier (TWTA) operation, 180 W per transponder.

4. Equivalent Isotropically Radiated Power (EIRP) at edge of coverage (EOC): at least 53.5 dBW. Downlink power flux density (PFD) at a user terminal antenna at the edge of coverage will exceed -111.5 dBW/m^2 for all but 1% of the worst month. Link assumptions include: worst-case attenuation of 1.7 dB, 26 degrees elevation, and a constant atmospheric loss of 0.2 dB, per RARC 83. Heavy rain areas of the Southeastern U.S. should use a larger receiving antenna--approximately 60 cm--with the same receiver to obtain approximately the same percentage of availability.

5. The receiving antenna must accommodate and provide output from both senses of polarization simultaneously. Polarization switching is not considered to be a desirable option as it does not allow simultaneous multi-set operation.

6. The satellites located at each orbital assignment will actually be 0.2° apart (e.g. ACC's East locations are 109.8° and 110.2° West longitude). Each set of sixteen transponders on each satellite will operate on only one polarization sense. All 32 transponders are seen from the user terminal as if they were collocated.

7. RF modulation options include quaternary phase shift keying (QPSK), offset QPSK for constant power envelope, and other proposed modulations with high bandwidth and power efficiency for saturated transponder operation.

8. Each transponder's signal consists of multiple programs combined onto a single serial bit stream at 32 Mbps using Time Division Multiplexing (TDM) as shown in Figure 2.2-1. Traffic will be block-combined before being uplinked into the allocated sequence of TDM blocks. For uplinking

from multiple locations into one transponder, Time Division Multiple Access (TDMA) is desired.

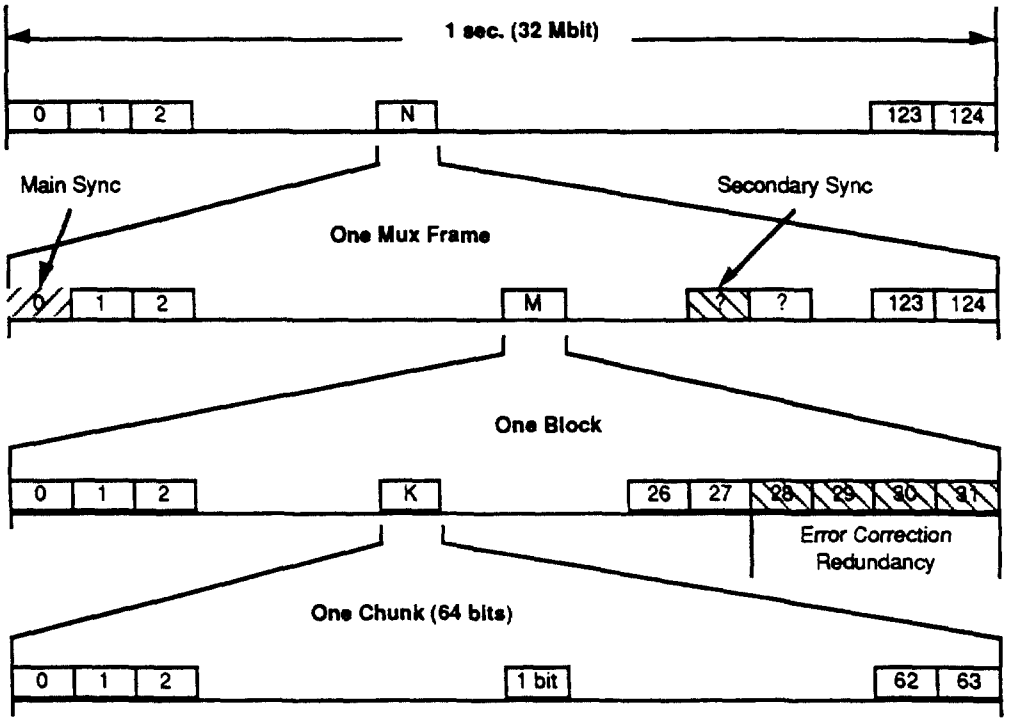

Figure 2.2-1 Basic Multiplex Frame Structure

9. The 24 MHz channel bandwidth and reasonable performance-implementation tradeoffs indicate that the bit rate should not exceed approximately 32 Mbps. Comments on the impact of different bit rates within this bandwidth are invited. This should take into consideration the rapidly rising degradation of modem performance at higher rates traded against received signal power under rain conditions using small antennas.

10. Multiplex-frame synchronization will be provided by a master uplink. Each uplink facility must establish and maintain basic bit synchronization of the TDMA uplink relative to the master. Short resynchronization preambles (one or two bytes) will be provided by each individual (TDMA) uplink to allow receivers to resynchronize to the new uplink's carrier phase and to refine bit sync, if necessary. Uplink guard-times and initial sync-probe time slots will be allocated as appropriate.

Individual uplink capacity will be allocated by the master uplink on request from slave (TDMA) uplinks. Each such uplink will be responsible for short-term dynamic multiplexing of its constituent services.

11. The basic information unit for multiplexing purposes is one byte, eight of which will constitute one 64-bit (8-byte) "chunk." Twenty-eight of these chunks will constitute the information-bearing portion of an error correction code block. Four additional chunks provide necessary error correction redundancy, totalling 32 chunks per error-correction block of 2048 bits (256 bytes). One hundred twenty five (125) such error-correction blocks constitute one multiplex frame having a period of 8 milliseconds (i.e., 125 mux frames per second).

    This format results in a total transponder channel bit rate of 8 bits/byte x 8 bytes/chunk x (28+4) chunks/block x 125 blocks/frame x 125 frames/sec = 32,000,000 bps (32 Mbps).

    One chunk (64 bits) in every frame, corresponding to a 8 kbps rate, will be used to assign lower-bit-rate services such as data and audio channels--many of which may operate at multiples of this bit rate. Other user rates, such as 9600 bps and its multiples, can easily be provided by time-rotating an additional chunk over a 5-frame superframe.

12. Forward error correction coding is envisioned to be rate 7/8 augmented Reed-Solomon (256,224) code over GF(256). The binary block length is 2048 bits and is capable of correcting up to 16 random symbol (byte) errors, or up to 32 symbol erasures, or an appropriate combination of both. No interleaving will be used. The user signal rate will vary, but should be expected to be at least 26 Mbps out of the 28 Mbps maximum possible.

13. Audio: At least four types of audio may be possible for each program channel. The receiver must decode only one of these at any one time. The four types are:

    (a) Extremely-High ("CD") Quality -- One or two channels, each of which has a 44.1 kHz linear-quantized PCM sample rate

with 16 bits per sample (705.6 Kbps per channel). This rate may be used primarily for digital radio broadcast stations.

(b) Very-High Quality -- One or two channels, each with a bit rate of 128 kbps using digital encoding (Dolby, DBX, or similar). This will be standard quality for entertainment TV, although Extremely-High Quality may be used when desired.

(c) High-Quality Voice -- Single channel, 16 to 64 kbps ADPCM (or other) with an analog audio bandwidth of at least 7 kHz, for use in news radio, conferencing audio support, class lectures, second (or nth) language channel, etc.

(d) Low-Rate Voice -- Single channel, 8 kbps or less. Used for real-time or recorded messages or personalized greetings.

14. Nominal video signals are to be available in steps from approx 28 Mbps down to 64 kbps according to integration of various program sources. Conventional NTSC television will occupy from approximately 13 Mbps to lower rates depending on program content, permitting at least two full-motion programs and many low-motion programs in each transponder channel.

15. The video format will at least include: frame-by-frame sequential coding (not interlaced); transmission coding frame rate of (approx.) 30 frames per sec. or 24 frames per sec.; run-length, conditional replenishment frame differential coding; horizontal, vertical, and 2-D adaptive differential predictive coding; subsampled interpolative coding; vector quantization; motion compensated (translated) coding (used in both predictive and transform modes; Discrete Cosine Transform (8 x 8 and possibly 16 x 16); and others as appropriate.

16. HDTV will be an optional future transmission format, and will dominate the bit stream using peak rates of approximately 26 to 28 Mbps.

2.2 Conditional Access (CA) Characteristics and Requirements

Protection of program content demands that a full security system be used for picture, audio, data and control. The baseband primary bit stream for each program will be encrypted using the accepted, economical DES-derivative key stream or a demonstrably secure alternative. The key stream to each user terminal can be changed by transmission through the satellite. This permits encryption changes for various programs and user terminals in order to assure payment capability. Characteristics include the following:

1. Bit stream per transponder for control should be variable from kilobits up to 10 Mbps peak in bursts.
2. Master Access Control Center for Conditional Access (CA) and charging includes one primary and fully operational secondary, with full data base.
3. The Master Access Control Center (MACC) should accommodate more than 100 million decoder units. (There may be several per user RF unit.)
4. CA Master Control capabilities must be robustly secure.
5. Keys must be individually unique, prohibiting regeneration from a known one.
6. Units must be protected from physical tampering or identifying embedded key codes.
7. Design will permit permanent turn-off of cloned and original unit.
8. CA for normal subscription programming via satellite or smart card.
9. Alternate path for activation, such as telephone or smartcard updating.
10. CA for impulse pay-per-view (PPV) via either stored credit or billing.
11. Pre-authorization of programs via credit storage in unit.
12. Accommodation of 32 separate primary program providers per satellite location, and more than 1000 secondary providers.
13. New keys able to be distributed to all units in less than 12 hours.
14. Satellite key distribution shall be possible on any transponder channel with TV set off but receiver powered.

15. Authorization response to individual terminal within one minute after request.

16. Terminals will periodically telephone to Access Control to download usage data and to enable user to interact during certain programming.

17. Probability of erroneous authorization: < 1 in 10e5 in any one year

18. Probability of authorizing failure: < 1 in 10e6 when C/N_0 exceeds 85 dB-Hz

19. Primary baseband decryptor using DES-derivative algorithm.

20. Tiers individually decrypted (DES-derivative).

21. Audio channels decrypted individually (optional for stereo pairs).

22. Auxiliary data channel (128 kbps) accessible individually.

23. Auxiliary subchannels individually accessible, 1.2 kbps to 64 kbps.

3.0 Receiver

3.1 RF (Outdoor) Unit

The following are requirements for the outdoor receiving antenna unit and LNB:

1. G/T (clear-sky): > 12.5 dB/K (target size 45 cm) over 500 MHz band.

2. System noise temperature: < 130 K above 30° elevation, clear-sky noise contribution ≈ 38 K.

3. Antenna pointing accuracy: if outside mounted, under moderate snow/ice conditions must meet < 0.5 dB signal variation over ambient temperatures of -30C to +50C and winds of 80 mph. Survival to 120 mph.

4. Antenna pointing for movable-beam antennas: if motor drive, detents to assigned DBS locations; if array, either multiple fixed boresights or electronically-steered; optionally the antennas may use a multi-satellite fixed-pointed capability with additional RF cables.

5. Dual circular polarization, on-axis cross polarization isolation greater than 25 dB. (Comment on the practicality of achieving higher isolations and

describe proposed off-axis co- and cross-polarized performance.) All signals of both senses from one orbital location shall be delivered to the indoor unit continuously.

6. Unit interconnections: single "cable" from RF unit to receiver/decoder for all 32 signals from each satellite location. This may be a special "dual coax" within a single sheath if it is not economical to multiplex both signal sets onto a single cable. Respondents are invited to comment on these alternatives.

7. Outdoor unit power is supplied by center conductor from the indoor receiver decoder.

8. MTBF exceeds 10 years; Comment on cost impact for the antenna motor drive.

3.2 Indoor Unit Architecture

The indoor unit's top-level architecture is expected to be similar to that shown in Figure 3.2-1.

The Video Section converts a selected bit-stream back into a television video signal for viewing on a standard TV or a high-quality video monitor or projector. For a standard NTSC output, audio is also recombined with the video.

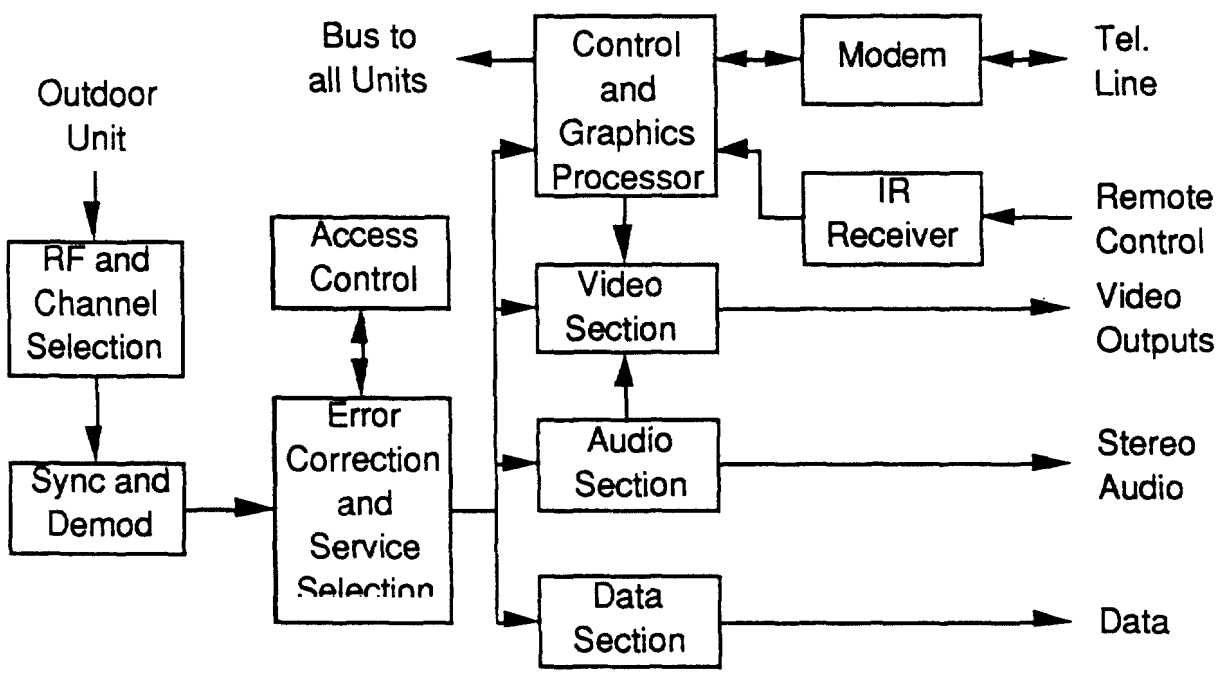

Figure 3.2-1 Top Level Receiver Diagram (Indoor Unit)

3.3 Indoor Unit Characteristics

A baseline set of indoor unit characteristics is as follows:

1. 32 RF channels per basic satellite location; tunable, with multiple-program capability on each transponder; all selectable by user.

2. Interference rejection: co-channel adjacent-satellite(s) at approx. 10°, and adjacent-channel(s) from companion satellite at approximately the same location, each centered 14.58 MHz away. Cross-polarization isolation: at least 25 dB.

3. Programming (television and other subchannel-selectable from 2 to 256 per transponder using n -bit addressing. (Comment on "n".)

4. Demodulator BER performance: 10e -4 at 32 Mbps for C/N_0 of 85 dB-Hz (minimum carrier to noise-plus-interference density measured at LNB output). This figure includes 1.7 dB excess rain attenuation for 1 percent of the worst month

5. NTSC output signal quality equivalent to or better than CCIR Grade 4.5

6. Connectors: 3 RCA jacks on rear - NTSC video baseband output, plus stereo audio; S-video connector; Type F jack on rear; channel 3 or 4 (rear select) NTSC RF output; RS-232 interface on rear for digital audio/data services; 2400 bps telephone modem w/RJ-11 jack for CA connection; Decoder output available to adapt connectors for ISDN-like data services, and to adapt for EDTV and HDTV -- rear space available; Multi-distribution for user receivers on single RF unit option available; no adjustments required; Optional RGB output on DB-9 or DB-15 connector.

7. Terminal features: option for up to three indoor units per single outdoor unit; user installation and hookup to TV set; Pay-per-view (PPV) program selection from user remote control; Comment on option to integrate DBS, cable and broadcast.

8. The RF and Channel Selection section downconverts the signal to IF where it is amplified, bandpass filtered, and further downconverted to (or near) baseband.