Introduction

This study is an outgrowth of a white paper[1] originally submitted to the PSSC describing a new concept in efficient satellite transmission of educational programming. A proposal[2] was then submitted for a small study to further refine the concept, determine applicability to the ACTS program, describe a potential ACTS experiment and estimate its development cost.

The original concept was oriented heavily towards digital television data compression, especially for classroom lectures. This was because of the years of work that had been previously done for CBS Television[3] and ACC[4] on digital television data compression for transmission from Direct Broadcast Satellites. It had been realized that classroom lecture transmissions were capable of being compressed at least an order of magnitude more than entertainment types of transmission.

Substantial additional gains could be obtained by dynamic multiplexing techniques that had previously been developed by the author (and others) at Bell Telephone Laboratories. The latter had originally been developed for long-distance trunk multiplexing of Picturephone® signals. This technique is perfectly suited for a broadcast medium such as multiple class lectures occupying a single transponder on DBS. (It is <u>not</u> well suited for normal television across multiple transponders due to the extremely high bandwidth and bit rate that a home receiver would have to process in order to extract the desired signal.)

It was also evident that a large number of lower-bit-rate services could easily be included within the dynamic multiplexing structure. Some of these were originally mentioned, more as an afterthought, with plans to later explore their educational utility. It only later became clear that there is an immense potential for educational usage in some of the lower-bit-rate services.

It was originally hoped that ACTS could serve as a test bed for the wider-bit-rate dynamically multiplexed broadcast television services. After becoming more familiar with the ACTS concept and control system, it became evident that it is not well suited for operating in the same manner as a DBS system.

However, it simultaneously became clear that there are many related applications which are well suited to the ACTS system. For example, the lower-bit-rate educational services can easily be demonstrated through ACTS and can make use of the unique re-assignable transmission rate allocation which ACTS provides.

There also appears to be a substantial market for localized (spot-beam) educational broadcast services which cannot be efficiently provided by DBS. If a relatively inexpensive receive-only ACTS terminal can be developed and the ACTS control software can be suitably modified, then ACTS (and later K_a-band satellites) may have a significant future in educational broadcasting.

This report describes some of the types of services that could be provided by an educational broadcast system, the general system architecture, architecture for a receive-only ACTS terminal, and operational modifications to the ACTS control system which may be necessary.

Educational Applications for Satellites

The following scenarios illustrate some of the immense potential of an educational satellite system:

The School

Imagine, for the moment, a small-town mid-western school which previously had limited instructional capabilities in math and science. The students come into class, hand the instructor their homework assignments and sit down at their desks.

During the first few minutes, the instructor ask if there were particular difficulties with the homework. In response to each question, the instructor either directly answers the question, or enters it on a computer keyboard. The computer responds either with a direct answer or with information (received at the beginning of the class via the satellite) with which the instructor can formulate an answer. Alternatively, the computer indicates that a video response is available. Selecting the latter, the classroom video screens come alive with a verbal and pictorial explanation. Other questions are handled similarly.

The class then watches a half-hour lecture which was prepared by one of the foremost educators in the nation on that particular subject. During this time, the instructor uses the computer to electronically grade part of the homework and then personally grades those portions that require written responses.

After the lecture, an additional period of questions and answers is handled by the instructor, again with the aid of the computer. The graded homework is returned along with reading material and tomorrow's homework assignment. The latter were printed automatically during the lecture. Additionally, two students are handed study hall assignments on floppy disks with additional remedial programmed learning aids which have been automatically custom-prepared for them based on the homework scores. Another disk is loaned to an exceptionally bright student who wishes to pursue the subject in more depth.

At the end of class, the instructor picks up a printout (or a floppy disk) containing the plan for the next week's classes, teacher preparatory material, and a sample exam which can be customized if desired.

The Home Television

A blue-collar worker comes home from a frustrating day at work. It has been difficult, but he has managed somehow to get by all these years without being able to read. He realizes that he is at a dead-end for job advancement but is too embarrassed to enroll in a local adult reading class. He turns on the television to view the listings of tonight's programs on **DBS** (his satellite receiver with a 2' antenna--now as common as VCRs). He watches the videolog which shows a sequence of still-frames ads and has one or two sentence verbal descriptions of each of tonight's programs. He sees (and hears) that the educational channel has a beginning class starting tomorrow night on adult reading.

On the following nights he comes home, turns on the TV, and switches on the class. The class consists of still-frame images, reading text, animation, and an instructor's voice. The instructor gradually leads the new student through the basics of reading. Interspersed in the lecture are multiple choice questions, such as identifying the spoken word or sentence from the displayed written choices. He uses his TV remote control to respond. A visible or audible TV response tells him whether his choice is correct or not. At the end of the program, his percentage of first-time-correct selections is displayed, verbalized, and compared with his his previous scores. He is now on the way toward becoming literate, enriching his life, and being a more productive member of society and industry.

The Home Computer

A college student returns home to her children after working half-day. Her husband is also a student and works the other half of the day. She has already finished her Bachelors degree (mostly through satellite classes) and is now in medical school. Through the satellite and her home computer she is able to complete most of her classes without having to leave her young children with a baby-sitter.

She is presently taking a course in communicable diseases. This afternoon she especially wants to view a seminar on the latest research results on AIDS treatments. While she is watching the seminar, her computer disk is being down-loaded with a research paper written by the seminar speaker and containing the test results and statistical analysis being discussed during the seminar broadcast.

Later, for general interest, she audits a class on "Music Appreciation." Today's lecture on "the use of vocals within the symphonic form" is interspersed with excerpts from Mahler's 4th and Beethovan's 9th. The sound quality is the same as from her compact disk player.

System Architecture

The System

The envisioned services are part of a proposed satellite broadcast network such as that shown in Figure 1. A single up-link ground station provides a multiplexed digital signal which is rebroadcast from the satellite to multiple receive-only ground stations. Each ground station may receive any of the broadcast services for which it is authorized. The useful reception area is determined by the radiation footprint of the satellite transmission. In the ACTS system the coverage area may be a spot beam (e.g.,southern California).

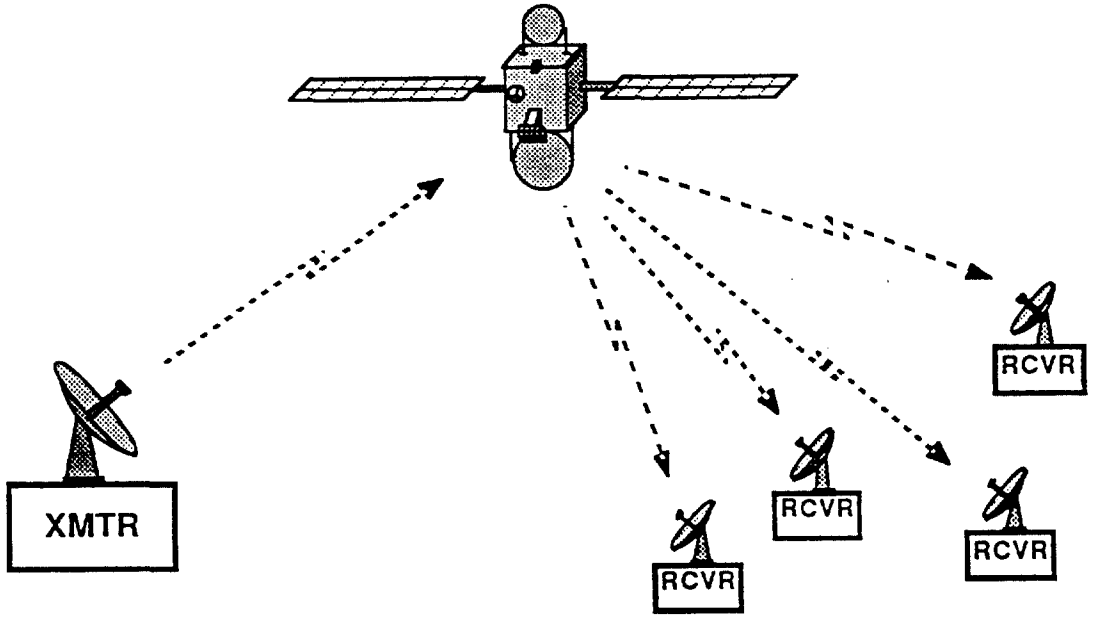

Figure 1 Broadcast Satellite System

All broadcast transmissions will be contained in an allocated block of transmitted bit-rate. In the ACTS system, the allocated bit-rate is always a multiple of 64 Kb/s. The allocation can be modified for each broadcast beam area at the end of a programming period (e.g., a half-hour) This will be very useful for optimal sharing of satellite resources between spot-beams in different time-zones.

The details of the multiplexing structure are not particularly relevant at this time. As far as the satellite is concerned, the multiplexed bit-stream is a single composite signal. (Even the example discussed in Appendix B has assumed nothing about the underlying TDM frame structure.)

Service Origination

Service origination is an important part of the overall system design. Many sources on several channels from different locations would provide almost limitless use in a broadcast mode. But, for a single broadcast allocation, all of the services must originate from a single up-link location to gain the efficiencies of the statistically shared resource. This requires that the originating programming material be either located at the up-link ground-station or linked by other means into the up-link ground-station. Examples of this are shown in Figure 2.

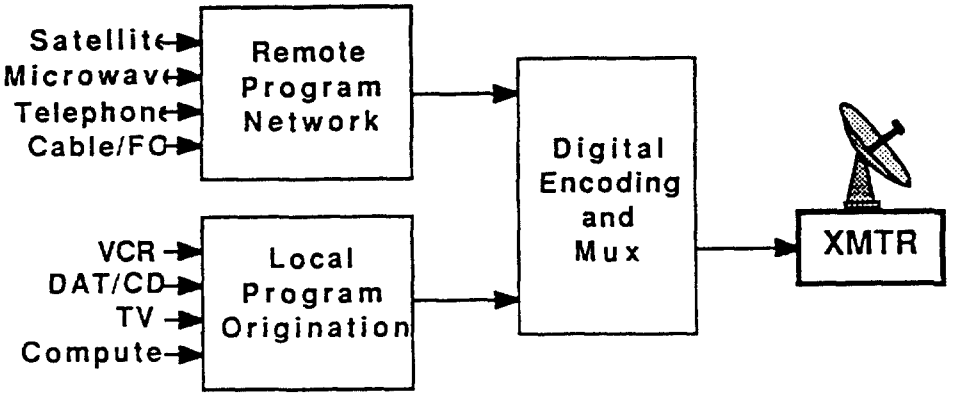

Figure 2 Broadcast Up-link Ground Station

Local programming could be generated live from a TV studio or classroom. Live programming could also be provided from a personal computer as shown later. Alternatively, these same types of programming could be pre-recorded on VCR, DAT (Digital Audio Tape), or CD (Compact Disc). The latter is made possible by the recent development of inexpensive recordable-erasable Compact Discs.[5]

Remote programming (live transmission) could be transmitted to the up-link ground station by any available means such as microwave, telephone (or ISDN) lines, cable, or FO (Fiber Optic) lines. C-band, K_u-band or K_a-band satellite transmission could also be used to provide feeder service for DBS transmission.

All of the originating signals are encoded for transmission and are statistically multiplexed into a single bit-stream before being transmitted through the broadcast channels.

Service Reception

Reception of one or more services requires a receiving system with a high enough G/T (Gain-to-Temperature ratio, a measure of sensitivity) to allow reliable demodulation at the transmitted bit rate. The required SNR (Signal-to-Noise Ratio) depends upon the transmission bit rate, the received bit pulse separability, any forward error correction coding employed, and the receiver decoding algorithm.

One architecture that can be used for either single or multi-service reception is shown in Figure 3. With this method, the entire bit-stream allocated to this service is first demodulated. Then the individual service is selected, digitally processed, and output to a television monitor or to a computer. In a multi-service receiving system, local distribution can be done immediately after the digital receiver with a common broadband cable. Each individual station would contain the service selection and digital signal processing.

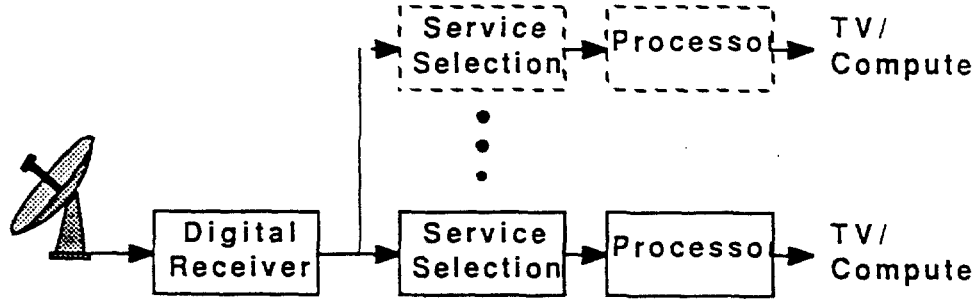

Figure 3 Single/Multi-Service Receiver

Alternatively, service selection could be done at the digital receiver and then the signal could be distributed through individual cables to each individual station. This has the advantage that each distribution link could operate at a much lower transmission rate (if buffering is used after service selection). However, the former approach seems preferable because it allows complete flexibility of service selection at the individual station.

Receiver Architecture

The original paper described four categories of services which could be offered by an educational broadcast service. These four service categories are illustrated in the boxes in Figure 4. Movies and full-video course lectures are shown in the same box because they are both originated from standard TV sources (e.g., TV camera or VCR) and require similar receiver processing for presentation on a standard TV receiver or monitor. The following subsections describe a receiver for computer lectures and data, a TV graphics receiver for computer lectures, and TV compressed video.

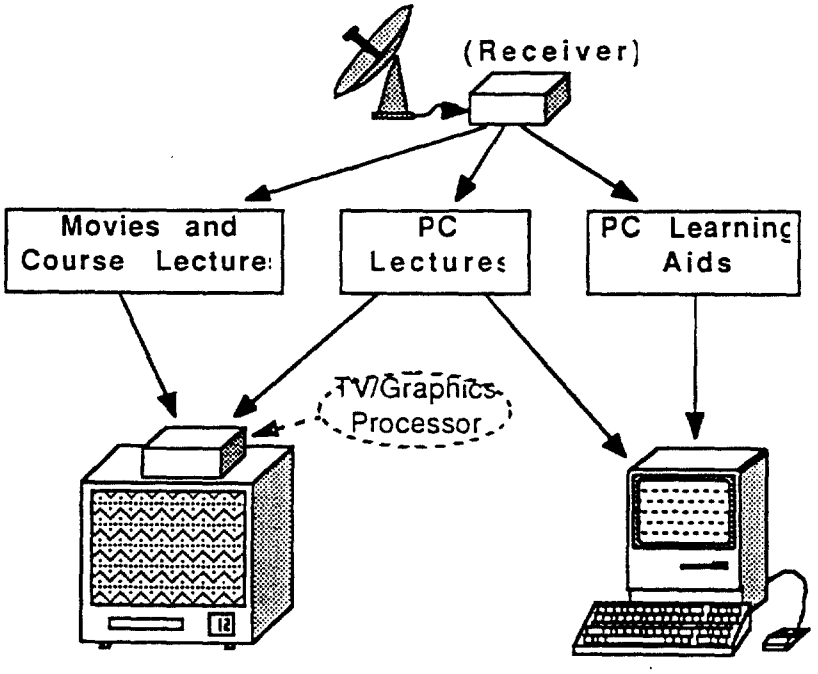

Figure 4 Broadcast Educational Services

Computer Lectures and Data

The Computer-Lecture receiver is conceptually the simplest in terms of the hardware that will need to be developed. A single plug-in card would contain the service selection, error correction and buffering hardware necessary to input the received digital information to the computer. The audio signal could be separated by the computer and output through the computer audio system and speaker. Alternatively, the interface card might separate the audio and provide D/A conversion and amplification

for an external speaker (or stereo system--e.g., for a music appreciation class). This approach is illustrated in the left half of Figure 5.

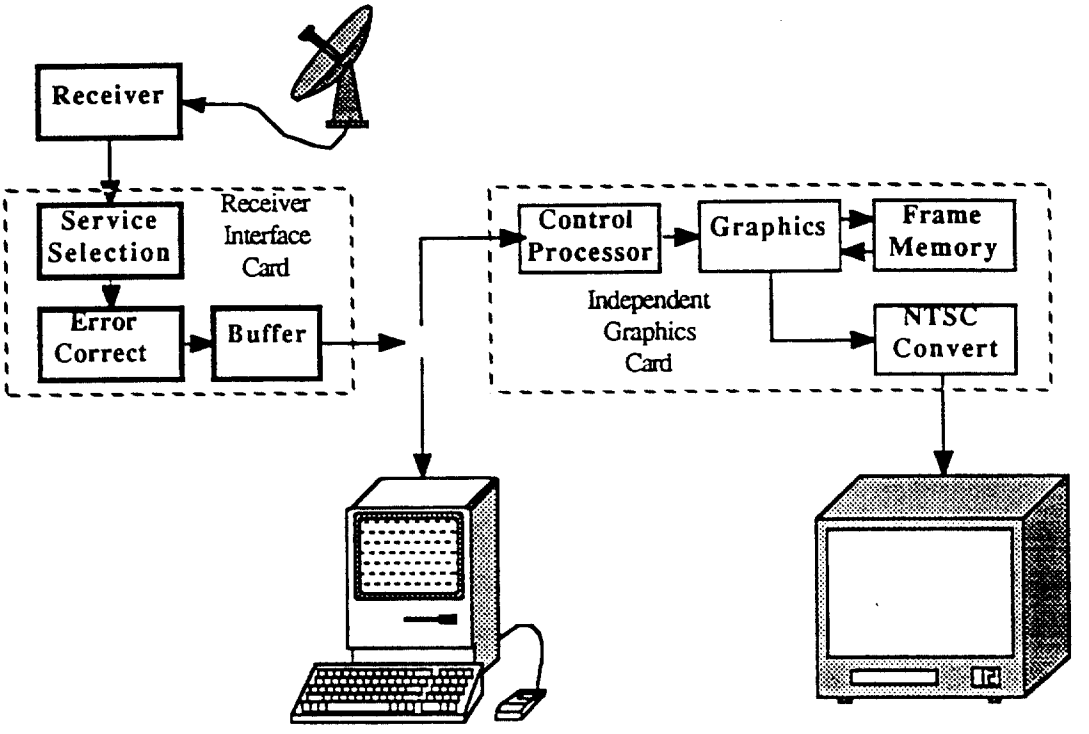

Figure 5 Computer Lecture Receivers

The advantage of this approach is that minimal hardware need be developed and manufactured. This leverages off of the inherent processing power, hardware and software that is already available in today's personal computers. There is already substantial market penetration of personal computers into the educational and business environments. As prices come down and capabilities increase, this penetration will grow and will extend significantly into the home market, especially among the student population.

Broadcast to personal computers has the most flexibility for educational programming. In addition to the real-time lectures, additional files can be simultaneously down-loaded for off-line study. This could include:

- reading assignments
- reference materials
- homework assignments

- supplementary programmed learning for either remedial or extended study
- examinations

and any other learning tools which the instructor deems necessary or useful to the student.

In a classroom environment, additional information could be provided which would be coded so as to be accessible only to the classroom instructor. This could include:

- course planning material
- in-depth reference material
- answers to exams and homework assignments
- customizable exams
- data bases with answers to the most commonly asked questions
- programs to aid in the grading of individual homework and exams

Obviously, this is a very powerful tool for use in either the classroom or the home. Its applications and types of services are limited only by the creativity of the course originator and the software tools available to or created by the originating instructor. The only software permanently resident in the computer is that needed to boot-strap the selected service. All other control software is down-loaded through the satellite link for a particular course.

Computer Lectures via TV

It may be desirable to display the computer lectures on standard TV monitors in the classroom or in the home. The right half of Figure 5 shows how this might be accomplished. An additional processing board would consist of a control microprocessor and associated RAM, a graphics processor, a frame store, and a NTSC converter which outputs a standard TV signal. This in effect, provides only the functions of the computer which are essential to producing a video image. Once this TV signal is re-created, distribution in a classroom could be done through the same distribution cabling used for VCR signals.

In a home or school environment without a computer, the two subsystem elements shown in Figure 5 could be combined into a single box with the satellite digital receiver. Some interaction could be provided by means of the generic remote controls that are available in today's market. The software for this type of service would also be down-loaded through the satellite to the home-type receivers.

If the home or school unit also includes TV compressed video (discussed next), then substantial economies would result from the fact that most of the components necessary for computer lectures are also present in the compressed video processor. Any additional components (e.g., the graphics

processor) could be available as an inexpensive plug-in board. In fact, it may be economically feasible to just include this capability as part of the basic design of the compressed video processor.

TV Compressed Video

The basic method of providing TV compressed video is discussed in considerable depth in Appendix A. The compression "algorithm" is actually a highly adaptive algorithmic system rather than a single compression algorithm. This allows the same encoding system to be used for high-bit-rate high-quality movies and for low-bit-rate (but still high-quality) classroom lectures.

The specific method of accomplishing the adaptive compression is proprietary and is relatively complex compared to the decompression required in the receiver. It is based on predictive and sub-sampled conditional replenishment techniques and is optimized for broadcast systems. Transform techniques are not used due to the bilateral complexity of the encoding and decoding processes. For more discussion, refer to Appendix A.

Application to ACTS

The ACTS System

Although a full description of the ACTS system and transmission formats is beyond the scope of this report, a good overview of the ACTS system is provided by Naderi and Campanella[6] and Coney, et al.[7] However, the facts and parameters relevant to this application will be discussed here in sufficient detail to allow evaluation of applicability, determination of a general receiver architecture, and sizing of receiver processing.

One of the main differences between the ACTS system and a DBS-type system is that the latter transmits simultaneously to either half or full CONUS and the former transmits only to one spot beam area at a time and the spots are relatively small. This limited area coverage is an advantage for some types of services because the same transmission frequencies can be simultaneously used in other spot-beam areas without mutual interference. In this manner, ACTS can provide local-specific services that, through DBS, would have to be suitable for nation-wide use. Each has its important place.

ACTS has two main types of K_a-band operation. One is as a wide-band, switched, analog transponder. The other is as a switched, space/polarization-diversity, multi-beam digital TDMA system known as the LBR (Low-Bit-Rate) system. Only the latter is of interest in this report. Also, because of the high interest in receive-only terminals, the main emphasis will be on the satellite down-link.

The basic ACTS LBR transmission rate (one of several transmitters) is 110.592 Mb/s. Coded down-link transmission operates at 55.296 Mb/s. The basic frame is 1 ms with 1728 slots of 64 bits each, as shown in Figure 6. There is also a super-frame structure (75 frames) that is used for control purposes. The existence of this super-frame structure (and its coordination with a user's T1 super-frame) implies that the bit-mapping of user bits to ACTS-slot bits is fixed and known. (This fact will be very useful later for the design of the dynamic multiplexer)

All data (except for preambles) is scrambled by "ex-or"ing (combining with) a fixed 64-bit scrambling sequence which insures sufficient data transitions for bit-tracking.

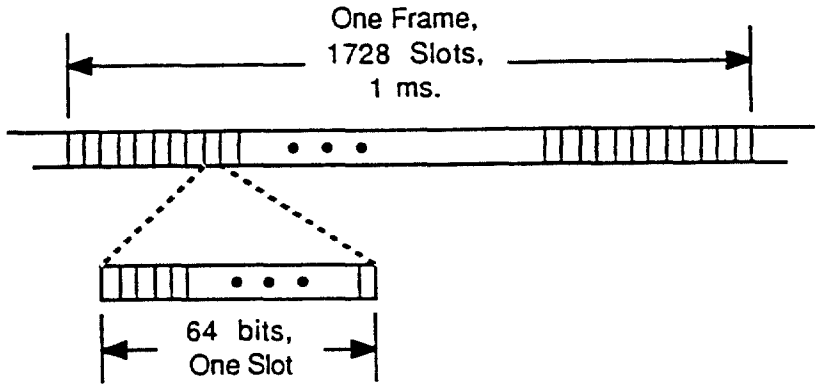

Figure 6 Basic ACTS Transmission Frame

Within the 1 ms ACTS frame, the ACTS satellite down-link transmits all traffic which is directed to one spot-beam in one contiguous burst of slots known as a "Dwell." Therefore, the down-link in made up of several dwells as illustrated in Figure 7. Additional dwells are allocated for the MCS (Master Control Station at NASA Lewis), acquisition, and a "Fade Pool." The durations of these dwells and their frame locations are assigned on an as-needed basis and allow for changing traffic needs.

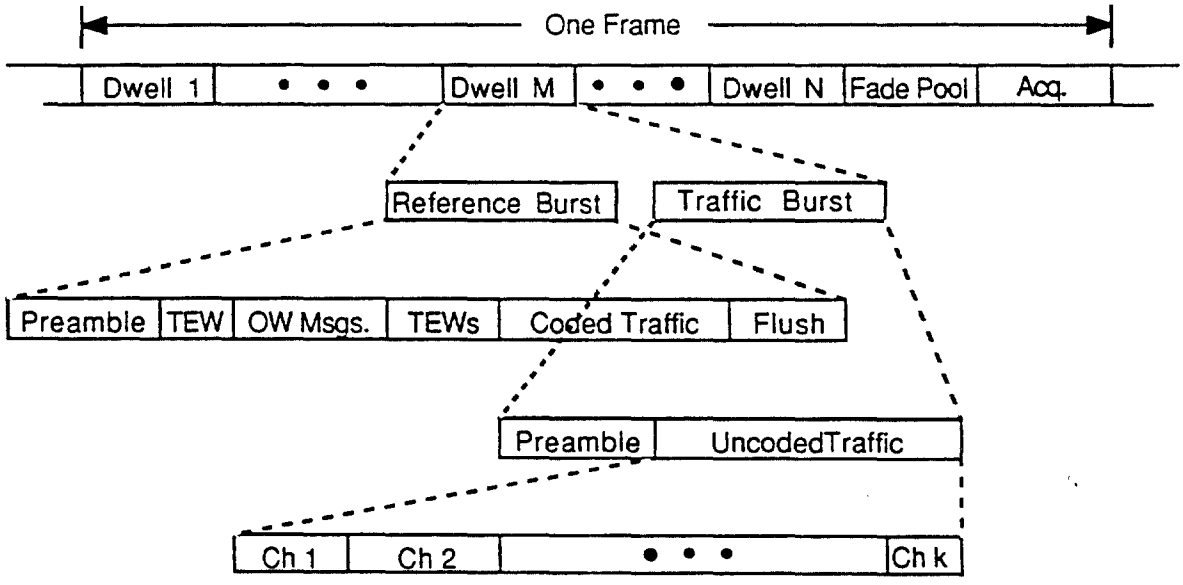

Figure 7 ACTS Down-link Frame Format

(The documentation available to the author at this time is not totally consistent as to the details of the dwell format. However, it is believed that the following information is mostly consistent with

Naderi and Campanella with some last minute modifications based on the recently released draft copy of the LBR terminal RFP[8].)

Each dwell consists of a Reference Burst followed by a Traffic Burst. The Traffic Burst consists of a preamble followed by slots containing all of the actual down-link (uncoded) traffic data for terminals in that beam-area.

The Reference Burst (except for the preamble) is convolutionally encoded with a rate-1/2 constraint-length-5 code. The preamble is used for receiver synchronization during communication. The TEWs (Tracking Error Words) are used for up-link tracking feedback for terminals with up-link capability. The OW (order-wire) slots provide control messages from the MCS to the terminals. Coded traffic is also included in the Reference Burst. The flush bits allow the receiver (Viterbi) decoder to complete decoding of the previous slot.

All slot assignments and reassignments are obtained through the OWs. All reassignments of slot locations take effect at the next super-frame boundary.

The RAB (Receive Acquisition Burst) is formatted similar to the RB and is used for the initial receiver acquisition search. Super-frame synchronization is also obtained from the RAB.

The Fade Pool allows for coded transmission for those receiving terminals experiencing fading due to heavy rain and is assigned on an as-needed basis.

Receive-Only Terminal

A receive-only terminal is the simplest in both hardware and software and least expensive because it does not have to operate in the interactive modes required in a two-way terminal. However, this is not the operating mode envisaged in the original ACTS system concept. As a result, a receive-only system design may require modifications in the MCS control software, as discussed later.

The receiver architecture shown in Figure 8 is intended primarily for a service requiring a relatively low data rate. However, there is no conceptual reason why the same principles could not be extended to a higher-rate terminal.

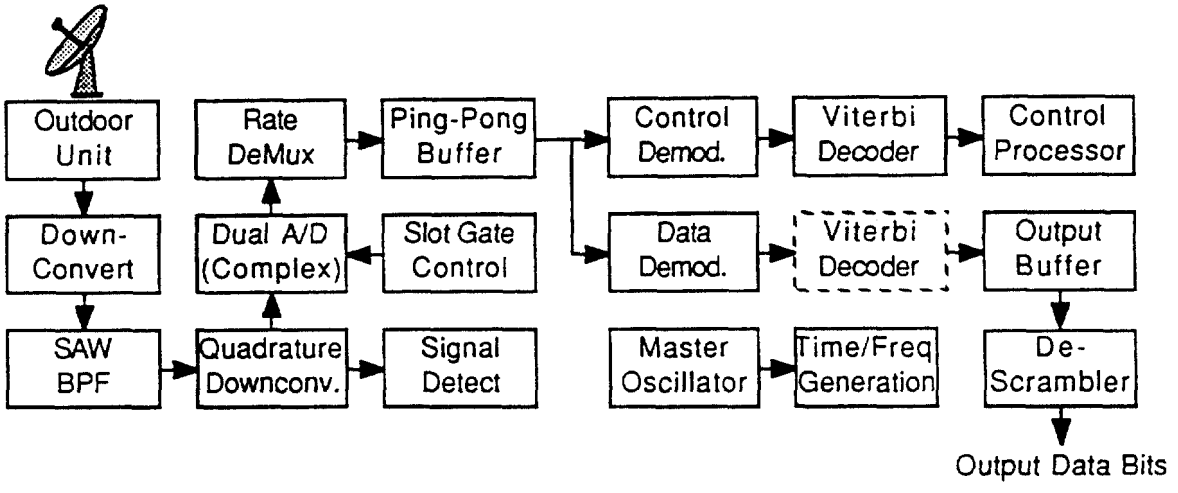

Figure 8 Block Diagram of Receive-Only ACTS Terminal

The outdoor unit contains only the LNA, initial down-convert stage(s), and amplification. No up-link transmitter or diplexer is required. Also, as we shall see later, the dish size can be considerably smaller than the 2.4 m dish suggested for two-way terminals.

Once inside, the signal is further down-converted and is band-pass filtered. This establishes the demodulation bandwidth. The signal is then quadrature down-converted to base-band and is complex A/D converted with a pair of high-speed converters at a complex sampling rate of 221.184 MHz. This rate is chosen to be precisely twice the down-link bit-rate, but is **asynchronous**. Six-bit flash A/D converters operating at this speed are readily available today and are relatively inexpensive.

The most expensive part of this design is the Rate De-multiplexer which splits the high-rate sample streams into slower parallel streams for temporary storage in inexpensive memory. A ping-

pong RAM buffer is used in order to allow processing on one frame's data while another frame is being received and stored.

The slot-gate-control turns on the A/D converter clocks during only those slots which we wish to receive or monitor. It can be as simple as a 2 K RAM chip which is addressed directly by the terminal timing chain. The RAM chip is loaded from the terminal control processor. In order to facilitate slot re-assignment hand-over, a second RAM chip should be used to "shadow" the slot-gate-control chip.

The Control Demodulator is used to extract OW messages from the Reference Burst. A hardware Viterbi decoder is used for OW message decoding. It may be possible to use a commercially available Viterbi decoder integrated circuit from Harris Corp.or Linkabit Corp.to accomplish this. (The TRW VHSIC Viterbi decoded chip is designed specifically for the constraint-length-7 rate 1/2 convolutional code using the Odenwalder taps and is therefore not usable in this application).

The control processor filters and interprets the OW messages and provides control for all of the various terminal tracking and operational functions.

The Data Demodulator re-synchronizes the carrier phase and bit-timing and demodulates the data. If the terminal must also operate in the coded mode, then either a second Viterbi decoder must be provided or the one in the control demodulator can be shared. The data is descrambled and buffered for output to the user. If only one service is being selected out of a composite dynamically multiplexed group, then the control processor will select for demodulation only that portion of the down-link data which is relevant.

The master oscillator provides a reference for conversion frequencies and terminal timing. The Time/Frequency generation unit derives all of the necessary frequencies and timing signals for the terminal. It also provides closure for the bit-timing PLL (for long-term tracking--not bit detection).

Digital demodulation of asynchronous samples can be accomplished by means of the processing architecture shown in Figure 9. Although the samples are taken at high rate, the demodulation can occur at a much lower rate due to the ping-pong buffer and the relatively low duty cycle of the relevant portion of the down-link burst.

The complex samples are first derotated to establish the proper phase reference for demodulation. The derotation phase consists of a starting phase plus phase accumulation to compensate for frequency offset due to oscillator frequency error and satellite Doppler shift. The starting phase is easily determined from the preamble and the elapsed time until the relevant data.

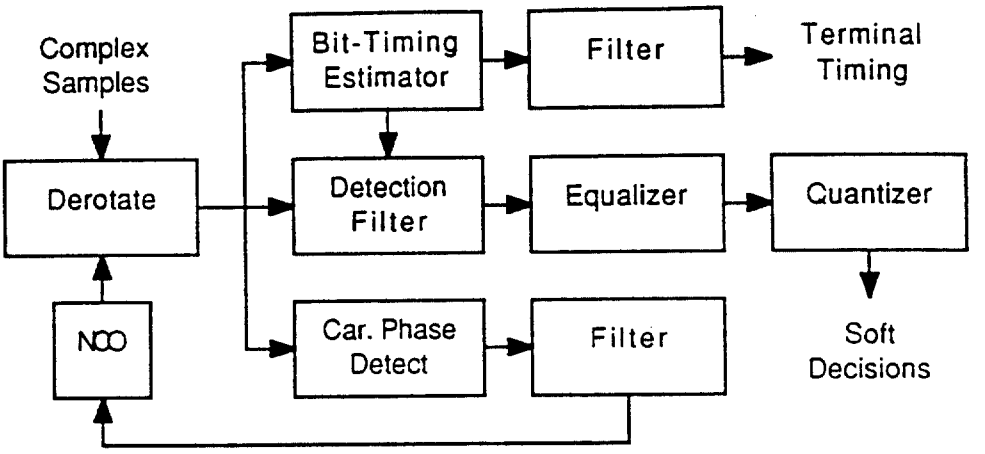

Figure 9 Small-Terminal ACTS Demodulator

The bit-timing estimate is also determined from the preamble. The timing error is filtered and provided to the master timing generator for long-term time tracking. The error measurement is provided to the Detection Filter unit which adjusts its filter function according to relative sampling phase (using a proprietary algorithm).

The Equalizer may not be necessary because its effect can be incorporated into the Detection Filter. However, it is sometimes more computationally efficient to separate this function. The output soft decisions are either quantized and sent to the Viterbi decoder (for coded transmissions) or are hard limited and output as decision bits (for uncoded transmissions).

There are several means that have been considered for implementing the demodulator. All involve using at least one programmable signal processor chip, such as the TI 320C30 or AT&T DSP-32C. Initial throughput estimates indicate that a single chip could be used for demodulating the proposed educational broadcast service. A second chip would be used for the RB.

For higher rate services, an array of these processor chips could be used, or a separate demodulation co-processor could be developed. A preliminary (and proprietary) design has already been done by the author for an integrated circuit to accomplish this function.

For relatively low-rate transmissions where smaller antennas are desired, an additional 3 dB or 6 dB of E_b/N_o (bit energy to noise spectral density ratio) can be obtained by transmitting each bit twice or four times respectively. This also respectively doubles or quadruples the number of slots required. (More on this later.)

Detection is accomplished by first adding the soft decisions together before the hard decision or Viterbi decoding. In order to maintain proper spectrum shaping, bit scrambling must be applied after the bit doubling or quadrupling at the up-link source. Descrambling is then done in the demodulator before adding the soft decisions.

These are all processing functions that are well understood and implementable today.

Receive-Only Algorithms

The acquisition and tracking algorithms for a receive-only terminal are substantially less complex than those of a two-way terminal. The reason is that neither the transmission nor the two-way hand-shaking algorithms are required.

The acquisition algorithm shown in Figure 10 basically follows that given in the NASA draft RFP, but contains two significant modifications. One is the search procedure. The one described in the draft RFP follows a traditional line of thinking which is applicable to a pure sequential hardware approach, but is far from optimal for a signal-processor implementation.

The algorithm proposed here is to simply open the largest sampling time window that can be accommodated by the buffer store (possibly using both the ping and pong buffers) and then search the entire captured window off-line. A highly efficient software search algorithm can quickly determine the absence of signal and reject the entire window if none is found. If signal is present, then the processor can quickly cycle through several search stages to precisely determine the synchronization timing. This results in very fast initial acquisition.

The second difference is that no up-link acquisition procedure is used. Therefore, this procedure requires that the slot assignment be transmitted periodically from the MCS in order to allow a receive-only terminal to achieve acquisition at any time. **This is not in the present plan** and will need to be considered when designing the software for the MCS.

The receive mode algorithm is shown in flow-diagram form in Figure 11. Again, it basically follows that given in the draft RFP, but with significant differences. None of the procedures associated with up-link transmission (TEWs) or system hand-shaking via in-bound order wires (IBOWs) are incorporated.

Very few OBOWs (Out-Bound Order Wires) are relevant to a receive-only terminal. In fact, even the single-channel OBOWs have been deleted because it is expected that the proposed educational service will most likely always use more than one channel slot. (This can be reconsidered if necessary--the impact is minimal.)

Another difference is that the demodulator processor need only demodulate the relevant subset of slots within the ACTS service slot assignment. If dynamic multiplexing (such as described in Appendix B) is used within the ACTS service assignment, then some means must be included within the basic transmission slot to indicate that other demand-assigned slots need to be demodulated. This procedure is transparent to ACTS and does not in any way impact the ACTS system.

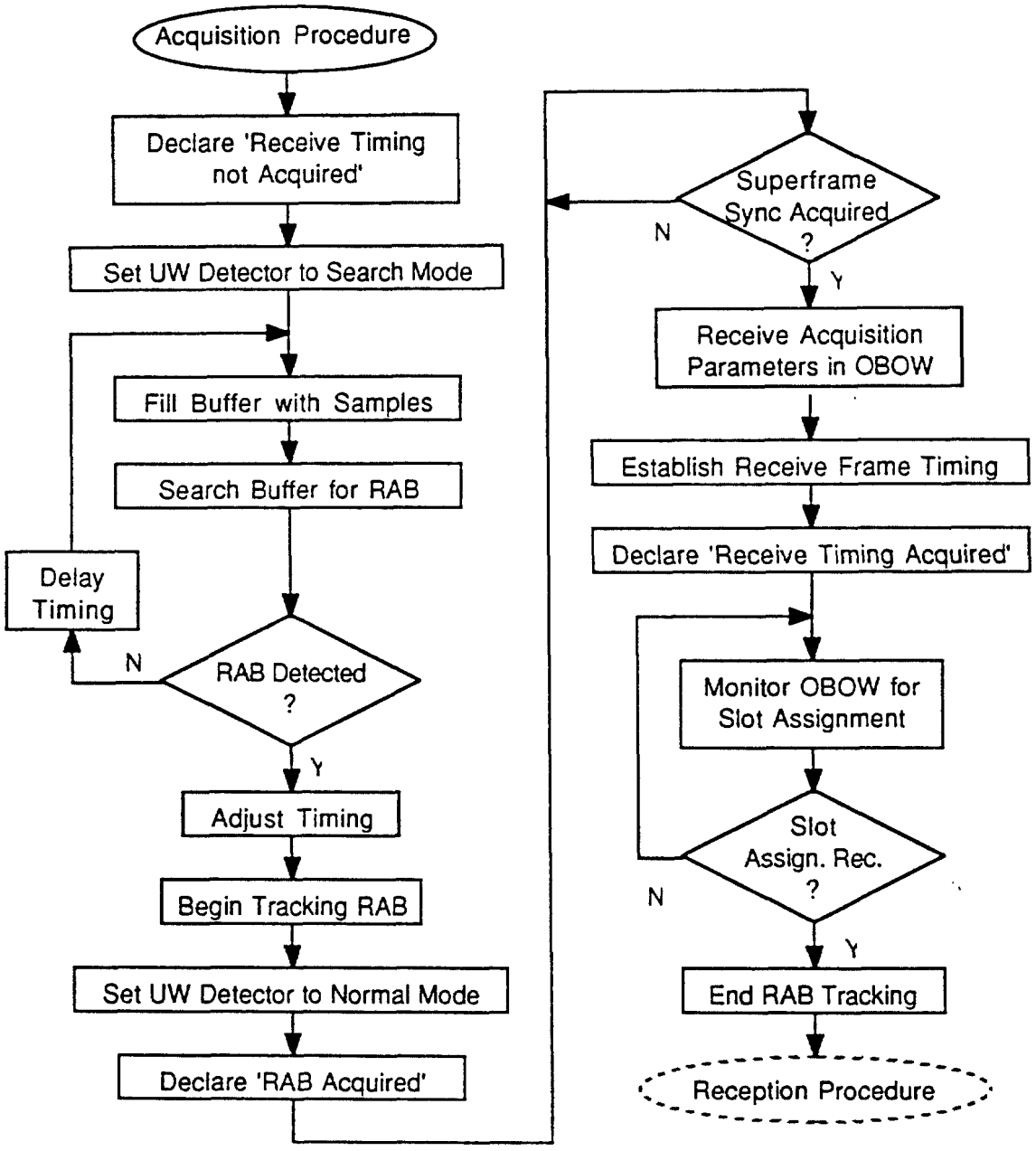

Figure 10 Acquisition Mode Flow Diagram

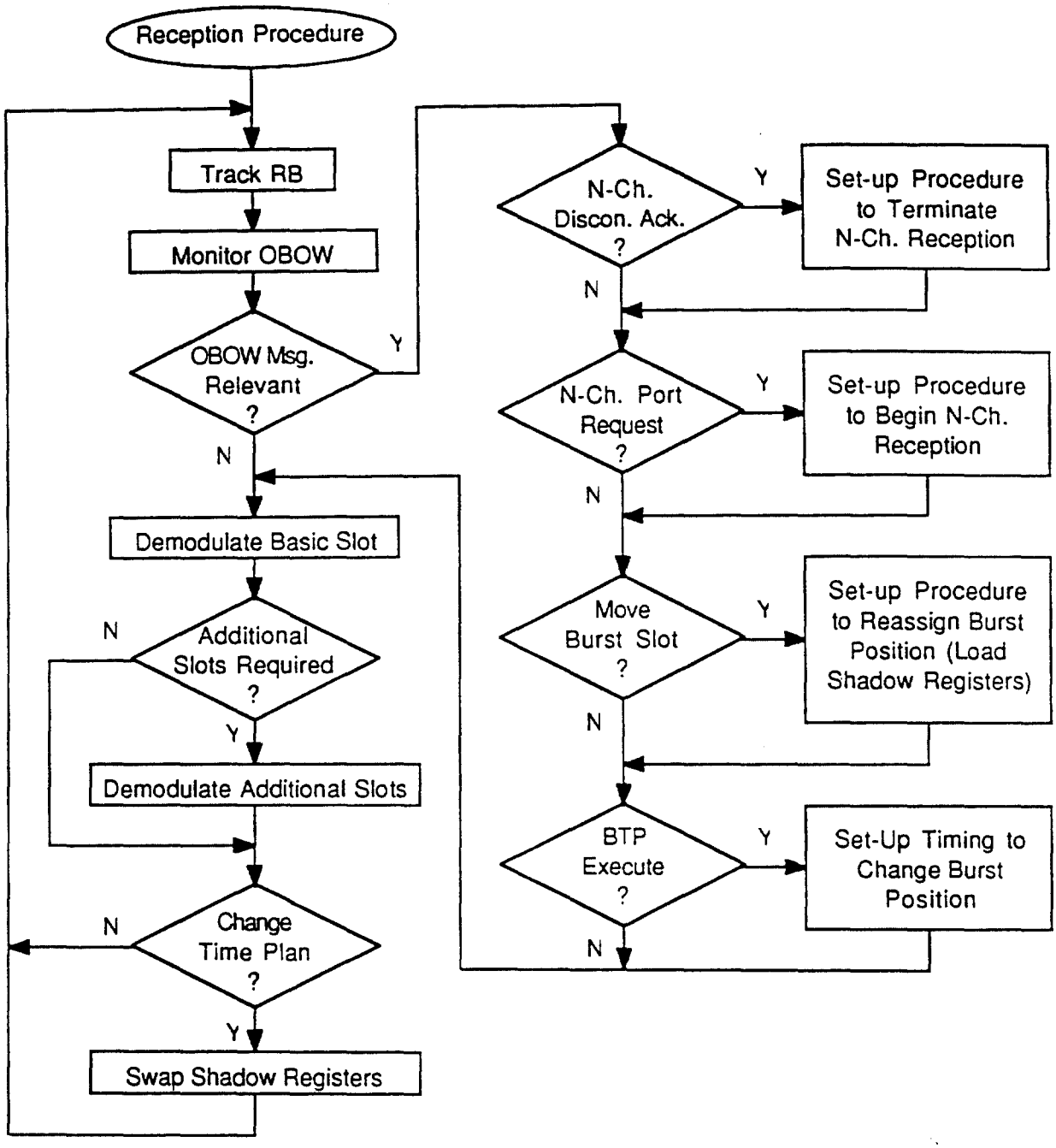

Figure 11 Receive Mode Flow Diagram

Antenna and Receiver Performance

The required antenna size depends upon a number of parameters:

- Available signal flux density
- Efficiency and losses in the antenna unit
- Required BER
- Receiver Noise Figure
- Implementation losses

The relevant specifications given in the draft RFP for the down-link are:

-	Flux density (uncoded):	$\geq$ -111.0 dBW/m^2
-	Flux density (coded):	$\geq$ -120.1 dBW/m^2
-	BER:	$\leq 5 \times 10^{-7}$
-	Receiver G/T	$\geq$ 21 dB/°K

The specified uncoded flux density and G/T include a clear-sky margin of 3 dB. This should be adequate for the vast majority of link conditions including light rain.

The receiver performance budget shown in Figure 12 is based of a dish size of 1.2 m rather than the 2.4 m dish size mentioned in the RFP. This is due to a number of factors.

The noise figure of 2.0 db (instead of the 4.0 dB assumed by Naderi and Campanella) is based on the recent availability of relatively inexpensive high-performance HEMT (High Electron Mobility Transistor) devices. Several LNAs are presently on the commercial market which have noise figures as low as 1.5 dB at 12 GHz. Indications are that this same level of performance will soon be achievable at 20 GHz.

Also, background temperatures are lower for offset-feed antennas because the feed horn can be pointed towards the sky rather than towards the earth, and noise contributions and blockage from a center-fed antenna are avoided.

Receiver losses can be considerably less for a receive-only terminal than for a two-way terminal because no diplexer is required and the LNA can be located directly at the feed point.

Modem implementation losses should be much less for the all-digital demodulator described previously.

For a broadcast service, it may be possible to further reduce the antenna size by using the bit-doubling or bit-quadrupling method previously discussed. Using this technique, the required antenna size is as follows:

TRANSMISSION METHOD	REQUIRED ANTENNA SIZE
Standard	1.2 m
Bit-Doubling	0.85 m
Bit-Quadrupling	0.6 m

The OW messages are always coded and therefore have a built-in additional 10 dB of margin. In addition, OW messages are always transmitted three times, only one of which must get through correctly. CRC coding insures that erroneous messages are ignored. OWs to change slot assignments are relatively infrequent. Also, the cost-function of missing an OW message is much less for a receive-only terminal because it cannot interfere with another terminal's transmissions as would be the case with a two-way terminal. Therefore, the OW BER can be allowed to climb substantially during brief rain storms.

Signal:			
Received Flux Density		-111.0 dBW/m2	
Antenna Size	1.2 m Diam.	0.5 dB-m2	
Received Signal Power			-110.5 dbW
Losses:			
Ant. Efficency	75.0 %	1.2 dB	
Circuit Loss		0.5 dB	
Antenna Pointing Loss		0.2 dB	
Total Loss			1.9 dB
Noise Temperature:			
LNA	2.0 db NF	169.6 deg. K	
Sky Temperature		20.0 deg. K	
Background Temperature		10.0 deg. K	
Total Temperature		199.6 deg. K	23.0 dB-K
Boltzmann's Constant			-228.6 dBW/K-Hz
C/No			93.2 dB/Hz
Eb/No	110.0 Mb/s		12.8 dB-Hz
Required Eb/No:			
Theoretical		11.0 dB	
Implementarion Loss		1.0 dB	
Total			12.0 dB
Margin			0.8 dB
Terminal G/T	19.5 GHz		23.0 dB

Figure 12 Receive-Only Terminal Performance Budget

Impact on the ACTS System

It appears that there is actually very little impact on the ACTS system (and the MCS) in implementing this type of broadcast service. The main issues raised thus far are:

1. ACTS must be able to provide a one-way service in addition to the two-way services required for telephone-type communication. (It appears that this is possible with the simplex circuit selection.)

2. The MCS must be able to make this type of one-way terminal assignment without requiring any return acknowledgement.

3. The MCS must periodically retransmit the OW messages for broadcast slot assignments (in the RAB) in order to allow arbitrary receiver start-up time.

4. If fade-pool assignment is desired at a receive-only terminal, then other means of request must be allowed such as by telephone or other land-line data link.

5. The MCS can not expect to get terminal status IBOWs (e.g., signal strength measurements) from a receive-only terminal.

6. The N-Channel Capacity Request IBOW message set should be modified to include **"Byte #5 (Channel Type) = 55_H broadcast."** This will allow the MCS to identify a "Broadcast" service setup request from any two-way ACTS terminal. Similarly for the N-Channel Disconnect IBOW.

An ACTS Experiment

Point-to-Point Video (simplest experiment)

The simplest experiment for educational transmission that could be performed through ACTS is to use a video conferencing connection between an instructor and a remote classroom as shown in Figure 13. The instructor could be located in a studio or in an actual classroom. Although a bilateral system is shown, the ideal might be to transmit full video service only from the instructor to the remote classroom and provide only a single 64 Kb/s return link for class voice response and possibly data for a FAX or similar device.

This type of arrangement would be ideal for specialized classes that could be originated by one instructor and then be offered (obviously at different hours) at different locations throughout the U.S. It could also be used for remote seminars where real-time interactive questioning of the speaker is desirable.

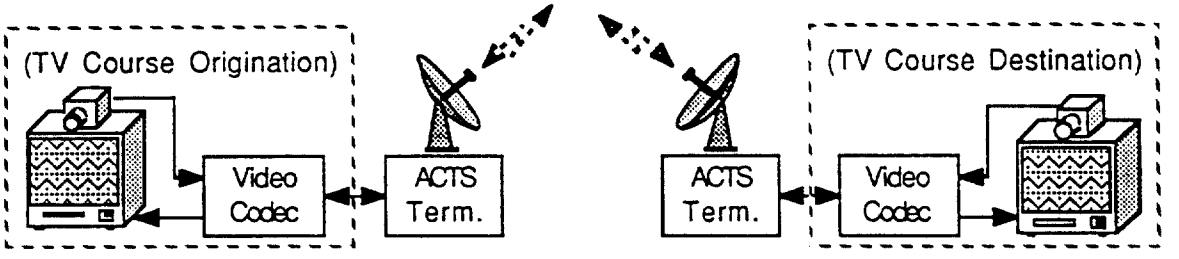

Figure 13 Point-to-Point Video Course

This system would use standard readily available video conferencing equipment operating at standard transmission rates such as 1.544 Mb/s (T1 rate). The two-way ACTS terminals would be the same type presently envisaged in the ACTS program.

Although the utility of this system is not in doubt, as an ACTS experiment it proves very little. It does demonstrate the capability of ACTS to deliver such services between different locations at different times and to access satellite resources on demand and to relinquish the capacity when not needed.

Single Service Computer Lectures (medium complexity)

The computer lecture is a very flexible and economical medium for most classroom applications. The sophistication of the presentation medium depends only on the amount of preparation done by the