### 4. Interoffice Switching and Transport Costs

Regardless of the type of collocation required for the DSLAM, access to transport from the central office to a CLEC's data switching systems is still necessary. CLECs must have the option of employing the ILEC's interoffice transport and switching to carry the xDSL traffic of their customers to their own networks, just as they do for carrying conventional local exchange traffic. Without such an option, a CLEC would be forced to build duplicate interoffice transport and switching facilities from every central office that would be cost-prohibitive, at least until the CLEC has a large, established base of customers served by broadband facilities at each central office. 52/

The cost of duplicating the ILECs' interoffice network -- to bring broadband traffic from each central office to the CLEC's packet switch -- would be prohibitive. 53/ As the FCC recognized in ordering ILECs to provide network element access to the ILEC interoffice transport network ("shared transport"),the volume efficiencies of the ILEC network are enormous. Lack of access by competitors to that shared interoffice network would pose a significant barrier to entry, as the FCC found. 54/ Similarly, if competitors had to duplicate the ILEC

---

52/ CLECs that target only a handful of central offices for xDSL service might find it economic to provide their own dedicated interoffice transport, but to serve all central offices (and thus all potential customers), the cost of such transport would be prohibitive.

53/ See US West Petition at 23 and 31-32 (regarding costs for backhauling data traffic).

54/ See Implementation of the Local Competition Provisions in the Telecommunications Act of 1996, CC Docket No. 96-98, 95-185, Third Order on

interoffice packet network in order to provide competing broadband telecommunications services to all central offices, the costs would be prohibitive. 55/

Because of the broadband capabilities of xDSL loops, dedicated interoffice transport to carry such traffic has become increasingly expensive (for example, $2,000 per month for a DS-3 circuit of 5 miles in the BellSouth region). 56/ As a result, a CLEC is unlikely to offer xDSL services to customers served by central offices with few potential subscribers (e.g., central offices serving small business and residential customers and central offices in less densely populated areas). 57/ Only the ILEC, which already has an interoffice network, could justify serving all those locations.

---

Reconsideration, FCC 97-295, released August 18, 1997, 12 FCC Rcd 12460, petitions for review pending, Southwestern Bell Tel. Co. v. FCC, Nos. 97-3389 et al. (8th Cir.), at paras. 25-37. The FCC recognized that if competitors had to duplicate the ILEC interoffice network (even through use of unbundled dedicated interoffice transport), the costs of such duplication would be enormous: "[T]he failure of the incumbent LEC to provide access to all of its interoffice transport facilities on a shared basis would significantly increase the requesting carriers' costs of providing local exchange service and thus reduce competitive entry in the local exchange market." Id. at para. 34.

55/ Requesting carriers also would require access to the ILEC's packet switches, just as they require network element access to the ILEC circuit switches. Switching, router, and interoffice transport, whether circuit-switched or packet-switched, clearly fall within the definition of network elements under the Act. 47 U.S.C. § 153(29). DSLAMs also are now being made with packet switching capability built in.

56/ The bandwidth required for interoffice transport for xDSL services would start at the DS-3 or OC-N level.

57/ In those circumstances in which placing a DSLAM in a central office can be cost-justified, prohibitions on placing equipment with switching functionality in collocation cages prevent efficient network design and optimization.

### 5. Maintenance, Engineering, Technical, and Other Costs

Finally, regardless of the form of collocation used, collocation will also impose additional costs on the CLECs over and above equipment and collocation costs. These include, for example, the cost of equipment installation and maintenance, installation of service, coordination with ILECs and CLECs for the placement of the equipment and delivery of service, and engineering for the location and installation of equipment. Because CLECs do not have maintenance personnel physically located in the ILEC central office, remote maintenance testing and diagnostic equipment is critical, and will create additional upfront and ongoing costs for CLECs that ILECs do not incur. Legal fees to negotiate and arbitrate interconnection agreements, and resolve disputes with ILECs about collocation, interconnection, and service quality (to name a few) are also significant deterrents to rollout of competitive xDSL services, and create significant delay and time-to-market disadvantages for competitors.

The far lower customer volumes that CLECs will have, relative to the ILEC (which today starts with almost 100 percent of the local customer base), also mean that the CLEC's per-customer costs will be far higher. For example, the costs of hiring and dispatching technicians to disconnect and reconnect lines on the DSLAM and to maintain the equipment would be prohibitive in the absence of substantial volumes of customers in each central office. Although many of these costs will also be borne by ILECs, the ILECs will have the volumes necessary to bring the per-customer costs down to a reasonable level. The ILECs also will have

the volumes necessary to justify a mass-market approach to broadband telecommunications services, rather than targeting certain central offices, which the CLECs of necessity must do.

In sum, the economics simply do not justify competitive provision on a broad geographic basis of xDSL services, in the absence of availability of xDSL-equipped loops, packet switching, and interoffice transport as network elements.

## V. ACCESS TO XDSL CAPABILITY BY ILEC COMPETITORS WILL HELP ENSURE A COMPETITIVE ENVIRONMENT FOR ISPS

Providing CLECs with access to xDSL capabilities in the ILEC network also should help to ensure a competitive environment for Internet Service Providers ("ISPs") who require access to customers, as pointed out, for example, by the Commercial Internet Exchange Association in comments filed in opposition to the RBOC petitions. 58/ If an ILEC is the only provider of xDSL services, it could potentially partner with an ISP, perhaps its own affiliate ISP, on an exclusive basis. Some of the RBOC xDSL plans already include the bundled provision of a high-capacity line with Internet access service. 59/ Exclusivity would guarantee that

---

58/ See Comments of Commercial Internet Exchange Association, filed April 6, 1998, on Bell Atlantic Petition, CC Docket No. 98-11, at 2.

59/ For example, Bell Atlantic plans to combine the monthly charge for the high-speed line with Internet access service for a single price. "Bell Atlantic to Offer High-Speed Links to Net," Washington Post, June 4, 1998, at E3.

customers subscribing to xDSL services from the ILEC would have high-speed access to the services of only one ISP. 60/

Permitting CLECs to obtain network element access to xDSL technology would better serve the objective of providing end user choice among ISPs. CLECs today are already partnering with ISPs to provide them an alternative to the ILEC's network. If CLECs have access to xDSL network elements, they can provide end users with high-speed access to the ISP of their choice. Most CLECs have an incentive not to enter into exclusive arrangements with ISPs for the simple reason that the market share of the ISP will determine the CLEC's share of xDSL services. Such exclusivity is not likely to be profit-maximizing. CLECs, therefore, have an incentive to partner with as many ISPs as possible. ILECs will also have the same incentive not to enter into exclusive or discriminatory arrangements if they face competition; if they are able to maintain an effective monopoly, however, the opposite will be true.

In sum, CLEC access to xDSL loops not only furthers competition in the provision of broadband telecommunications services, but also guarantees customers greater choice among ISPs.

---

60/ This scenario is not unlike the case of cellular carriers, who now are allowed to partner with a single long-distance carrier on an exclusive basis. Subscribers of these wireless carriers are not allowed to subscribe to the services of competing long-distance carriers on a 1+ basis.

## VI. FENCING OFF ACCESS TO ILEC DATA NETWORKS WILL LIKELY CREATE A DOMINANT LEC IN BOTH DATA AND VOICE IN THE FUTURE.

The notion of creating a much more liberal regulatory regime for packet-switched networks and data services, while retaining the system envisioned by the 1996 Act for circuit-switched networks and voice services, is not legally or technically sustainable. 61/ The Communications Act does not distinguish between the transmission of voice or data or between circuit switched and packet switched telecommunications. To foster the evolution of technology and service, regulators should refrain from drawing lines on the basis of technology and cost assumptions that will necessarily become obsolete as technologies develop and cost characteristics change.

It is widely acknowledged that in many cases, the same facilities are used for both packet-switched and circuit-switched networks, and that voice and data services are rapidly converging. As Intermedia noted in its comments to the FCC on the RBOC petitions:

> [T]here is no bright line between packet switched and circuit switched networks and services. In fact, "plain old telephone service" is routinely provided over packet switched data networks as well as circuit switched networks. Moreover, a single telephone call can originate on the circuit switched network, be transported over a packet switched data network, and terminate back on a circuit switched network. 62/

---

61/ The FCC has recognized that the term "network element" must "accommodate changes in technology." Local Competition Order at para. 259.

62/ Comments of Intermedia, Summary at 1.

Data has long traveled over circuit-switched networks designed primarily for voice telephony. Increasingly, purveyors of "Internet telephony" are learning how to make voice calls traverse packet-switched networks. With the help of electronics, customers are increasingly using the public Internet and other packet-data networks to carry voice traffic.

The merger of separate voice and data networks into combined broadband telecommunications networks (and the growth in the share of data traffic relative to voice traffic) mean that virtually all voice traffic may soon be carried by the same broadband telecommunications networks that carry data. xDSL technology already combines voice and data on the same line from the customer's premises to the central offices. Several companies have stated that they are carrying or will carry voice as well as data over their packet networks. Sprint recently announced, for example, plans to carry all its voice and data traffic over the same ATM (asynchronous transfer mode) based broadband network. 63/

These evolutionary trends all point to the same inevitable result: voice and data networks are merging, and where data goes, voice will follow. 64/ This is so because voice is narrowband and can readily be accommodated on broadband networks, and packet switching can be more efficient than traditional circuit

---

63/ See "Sprint Unveils Revolutionary Network," Press Release, June 2, 1998, at www.sprint.com/sprint/press/releases; Communications Daily, June 3, 1998, at 2-3.

64/ This is apparent when on examines the rate at which data traffic is growing relative to voice. See Section II, above.

switching. 65/ Thus, any regulatory distinction drawn between voice and data or between packet and circuit switched networks is artificial and likely to be unsustainable. Any policy that effectively limits competitors' access to ILEC advanced network capabilities will ensure that ILECs will remain dominant providers of voice services, as well as ensuring their dominance in providing broadband telecommunications services.

## VII. ILECS ALREADY HAVE STRONG INCENTIVES TO INVEST IN XDSL TECHNOLOGY.

Strong incentives already exist for the RBOCs to deploy xDSL technology broadly. The ability of xDSL electronics to leverage much of the embedded telecommunications infrastructure makes it a cost-effective method for the delivery of broadband telecommunications services to small-businesses and consumers. 66/ This ability to use assets that are already in the ILEC's network,

---

65/ Another less obvious trend is the evolution of network architecture from hierarchical to a flatter, more distributed topology. Packet switching technology is making this evolution possible since each individual packet contains headers that identify both the source and destination of the packet. The packet of information is not confined to a particular information path. The distribution of information, whether voice or data, will no longer be restricted to hierarchical paths. The development of broadband networks capable of carrying both voice and data, whose nodes are distributed in a non-hierarchical form, is a significant development in network architecture.

66/ See generally Appendix D. xDSL technology exploits existing copper plant, fiber feeder systems, and loop electronics in both existing and newer-vintage DLCs. ILECs have employed HDSL technology for several years, which means that the cable-and-pair assignment, provisioning, and troubleshooting processes, as well as support systems, which are needed to enable the widespread xDSL use, are already in place or can be easily enhanced to handle additional xDSL loops.

coupled with strong demand for higher-bandwidth services, is the reason that xDSL electronics are already being deployed by incumbent LECs, and, to the extent they are able to do so given ILECs resistance, by CLECs.

The RBOCs' own actions belie their claim that they lack incentives to deploy xDSL technology in their networks. The group of U.S. companies collectively known as the Joint Procurement Consortium (which includes all of the regional Bell operating companies -- RBOCs -- except Bell Atlantic) has plans to deploy more than 2 million ADSL lines over the next five years. The Yankee Group predicts than such deployment will occur before the year 2001.

As one example, US West announced recently that it has prepared 226 central offices in its 14-state region (covering 5.5 million access lines) to provide ADSL offerings by June 1998. It already has an ADSL offering in Phoenix, Arizona. For residential customers, US West plans to offer ADSL services for merely $40 per month plus installation fees. For businesses, it intends to offer slightly higher speed service for $65 per month plus installation fees. 67/

BellSouth and SBC recently announced major ADSL rollouts in their regions. BellSouth is planning to make ADSL service available to over 1.7 million lines in seven markets this year with expansion to 23 additional markets in 1999. 68/ SBC announced that its Pacific Bell operating company would begin

---

67/ "Bells, GTE, and Computer Giants Say ADSL Working Group Will Speed Deployment," Telecommunications Reports, February 2, 1998, at 23-24.

68/ "BellSouth Plots Ambitious ADSL Plan," Multichannel News, May 25, 1998, at 1; News Release, "BellSouth Announces Aggressive 30 Market Roll-Out of Ultra-

offering ADSL Internet access service to all or parts of 200 communities in California by September of this year, and expects its service to reach 4.4 million homes and 650,000 business customers. 69/ GTE has also unveiled plans to offer ADSL in approximately 300 central offices in parts of 16 states beginning in June 1998 for both residential and business customers. Its target monthly rates are between $30 and $250, depending on the type of service. 70/ Bell Atlantic recently announced its plans for rolling out ADSL services, beginning in September, with expectations of reaching 2 million lines by the end of 1998 and 5 million more by the end of 1999. 71/ Ameritech is also rolling out ADSL in its home region. 72/

The facts show that the RBOCs are actively deploying xDSL technology under the current regime, without any special incentives or bribes. There is no reason to assume that the RBOCs will not continue the deployment of xDSL in their networks. They do not need relief from regulatory requirements to

---

High Speed BellSouth.Net FastAccess ADSL Internet Services," May 20, 1998, at www.bellsouthcorp.com.

69/ "SBC's Pacific Bell Unit Unveils ADSL Plans, Files Pricing Tariff," Telecommunications Reports, June 1, 1998, at 34.

70/ See "GTE Jumps Into xDSL Game as UAWG Works on Standard," Telecommunications Reports, April 20, 1998, at 18; "GTE to Offer Ultra-Fast Internet Access," April 13, 1998 Announcement on GTE website, www.gte.com/g/news/adsl041398.html.

71/ "Bell Atlantic to Offer High-Speed Links to Net," Washington Post, June 4, 1998, at E3.

72/ See BellSouth Plots Ambitious ADSL Plan," Multichannel News, May 25, 1998, at 54.

create incentives for such investments. Such incentives already exist, and are powerful. The ILECs' request for deregulated treatment of their advanced technology and services is, in effect, a request for permission to charge supra-competitive prices for their xDSL services -- something they would be able to do only if shielded from competition.

## CONCLUSION

The denial of CLEC access to elements of broadband networks will almost certainly mean that ILECs who have monopoly control over narrowband (voice) networks today will become monopoly providers of broadband (including voice) services tomorrow. Enforcing the Act's market-opening provisions equally for all technologies and services is the best way to ensure wide deployment of advanced technology and the broad availability of competitive choices in advanced telecommunications services for all consumers.

A

# APPENDIX A

**DSL Technologies**

| Technology | Speed(s) | Distance Limitations | Characteristics |
|---|---|---|---|
| **ADSL** | 1.544 Mbps to 8.448 Mbps (Downstream) and 16 kbps to 640 kbps (Upstream) | 9,000 to 18,000 feet | Asymmetric (Different Transmit and Receive Speeds)<br><br>One Wire Pair |
| **R-ADSL** | 1.544 Mbps to 8.448 Mbps (Downstream) and 16 kbps to 640 kbps (Upstream) | 9,000 to 18,000 feet | Rate Adaptive<br><br>Asymmetric<br><br>One Wire Pair |
| **HDSL** | 1.544 Mbps | 15,000 feet | Symmetric (Same Transmit and Receive Speeds)<br><br>Two Wire Pairs |
| **SDSL** | 1.544 Mbps | 10,000 feet | Symmetric<br><br>One Wire Pair |
| **VDSL** | 12.96 Mbps to 51.84 Mbps (Downstream) and 1.5 to 2.3 Mbps (Upstream) | 1,000 to 4,500 feet | Asymmetric<br><br>One Wire Pair |

**Source:** *xDSL: Local Loop Access Technology*, WWW.3COM.COM.

B

# Appendix B

## xDSL Loop: Copper Between Customer Premises and Central Office

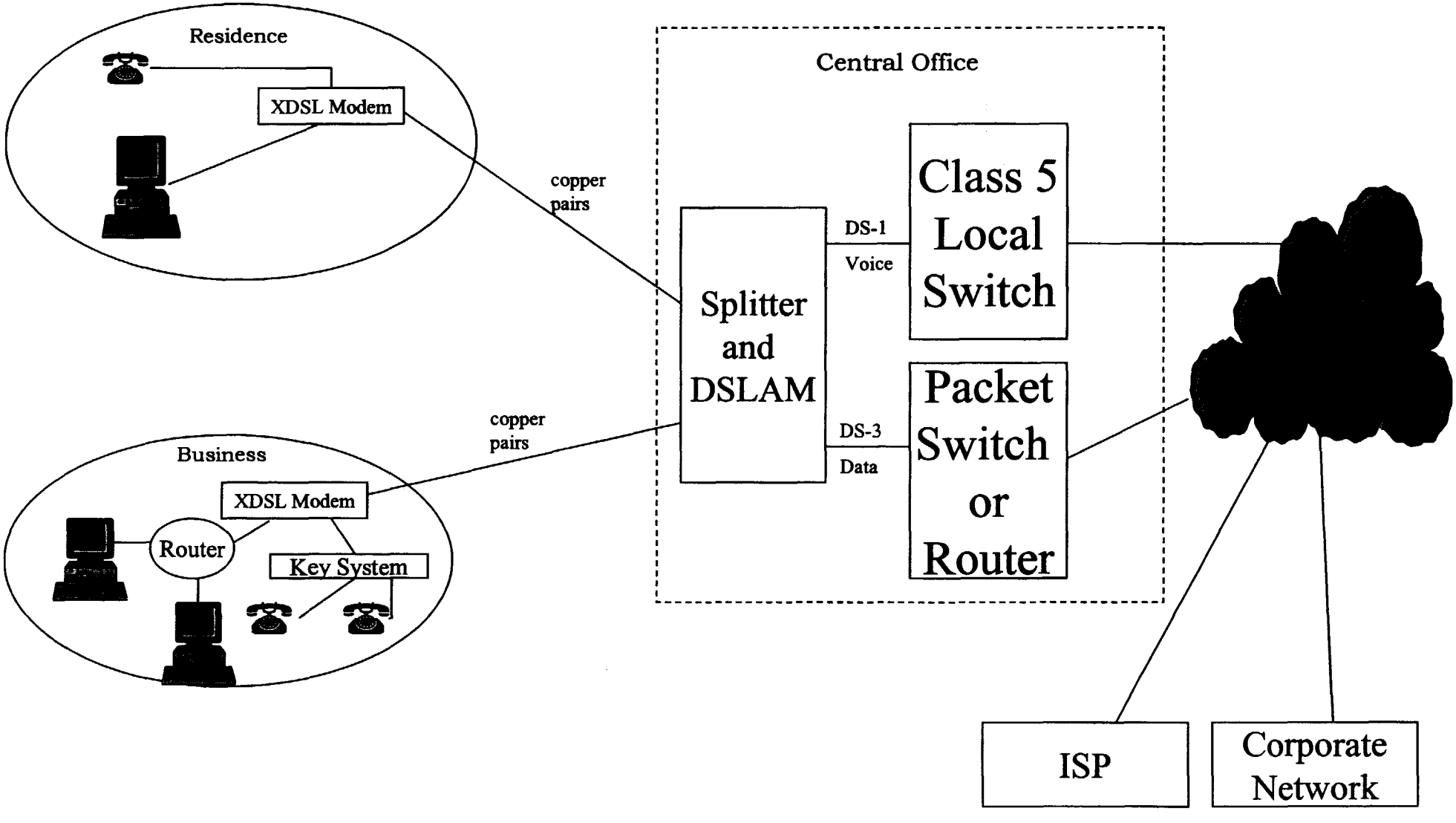

C

# Appendix C

## xDSL Loop: Copper Between Customer Premise and DLC

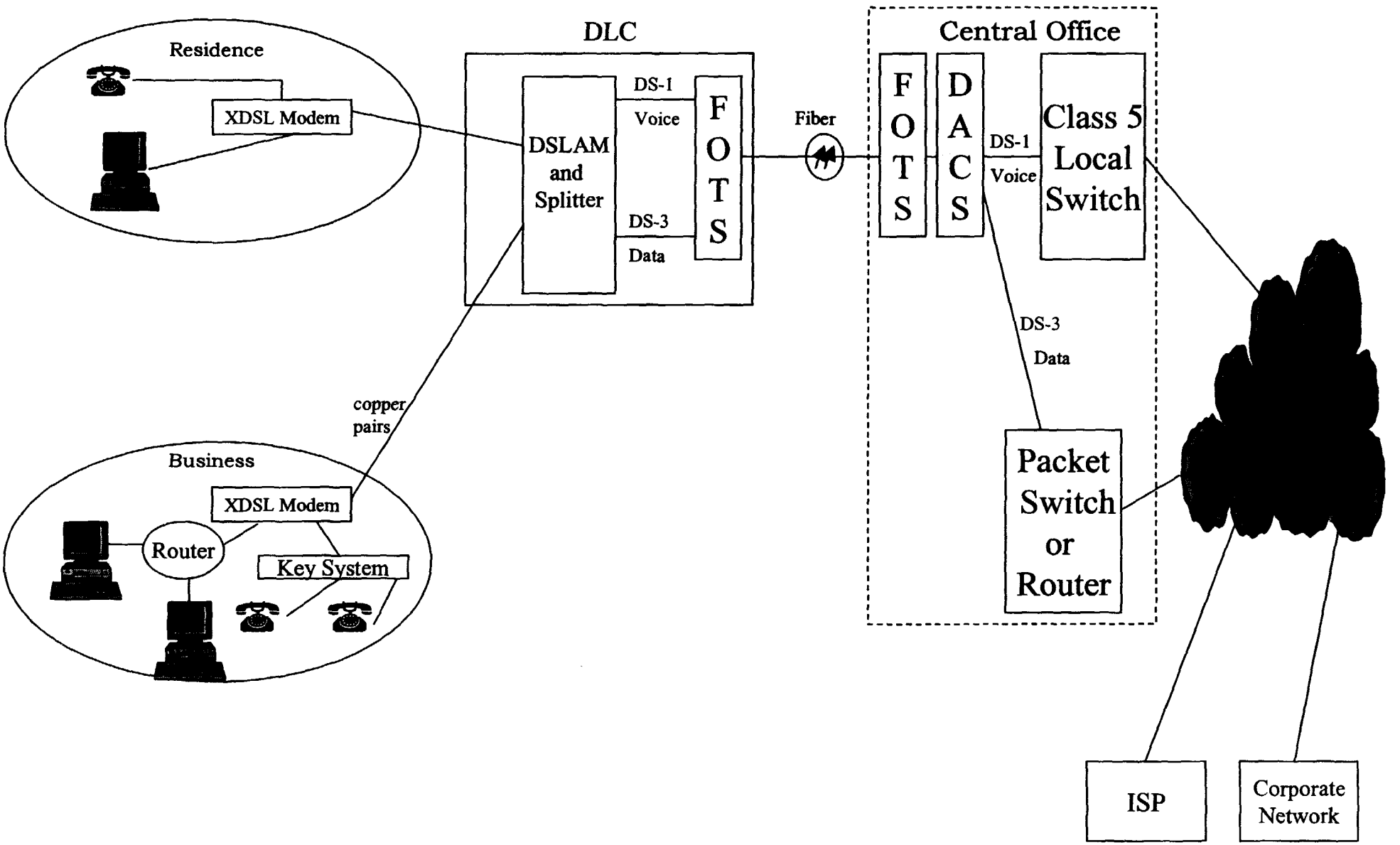

D

# APPENDIX D

## BACKGROUND ON XDSL TECHNOLOGY

### Limitations of Conventional Copper Loops

The low bandwidth of local loops today has little to do with the actual copper line itself. It results from filters around the core of public switched telephone networks that limit voice bandwidth to 4 khz to ensure high-quality voice transmission.1/ Voice-grade modems transmit analog data signals through the network without alteration, but only signals within the 4 khz range. The network treats such data signals exactly as it does voice signals. Without filters around the core of voice networks, copper access lines could pass higher-frequency signals but with substantial attenuation of the signal. The need to maintain voice quality on public switched telephone networks, therefore, limits the frequency (and thereby bandwidth) that could be exploited by copper access lines.

### The Potential of xDSL Technology

xDSL technology allows the transmission of signals over copper access lines at frequencies in the megahertz range. The higher frequencies, however, increase signal attenuation and introduce distance limitations on robust transmission of data. Greater signal degradation over greater distances also contributes independently to the distance limitations. A digital subscriber line ("xDSL") is basically a copper access line with a pair of modem-like devices at either end of the line.2/ Splitterless xDSL (such as, e.g., "ADSL-lite") modems today combine coding and splitter (that isolates 4 khz for voice) functionalities in a single device that can be plugged into a telephone jack. With xDSL electronics at either end of copper local loops, both voice and data can be transmitted on the same physical wire, eliminating the need for separate wires for voice and data. Because it allows both voice and data to be carried on the same wire, thus leveraging an existing network element, xDSL is considered an *enabling* technology rather than a replacement technology.

---

1 See General Introduction to Copper Access Technologies, at www.netspeed.com/tutorial.html.

2 Id.

xDSL technology is often referred to as xDSL, where the "x" stands for the many variations on the theme of using modems/splitters to carry voice and data over the same physical copper line. Appendix A summarizes the salient characteristics of the various xDSL technologies. Among xDSL technologies, ADSL has received the most attention.

## Limitations on Full Deployment of xDSL

Not all copper local loops with copper can be enabled with xDSL electronics. Depending on the type of xDSL technology, there are distance limitations that preclude some loops from being xDSL-enabled. 3/ A customer must be within the relevant distance from the ILEC's central office (if the copper portion of the loops runs all the way to the central office), or from the DLC that serves the customer, in order to receive xDSL services.

The distance limitations mentioned above are due to signal attenuation that arises from the use of frequencies in the megahertz range. Greater signal degradation over greater distances also contributes independently to the limitations. The higher the desired bandwidth and the greater the quality of signal transmission, the less distance there can be between a customer's premises and termination point of the copper segment.

Additionally, some xDSL technologies, such as ADSL, are asymmetric, meaning that the attainable downstream speeds are higher (1.5 Mbps for ADSL) than upstream speeds (384 kbps for ADSL). Symmetric xDSL formats carry information at the same speeds in both directions. Applications of asymmetric xDSL technologies are more consumer (residential) oriented, while applications of symmetric xDSL formats better suit the needs of businesses.

## Two Variations of xDSL-equipped Loops

Since the copper portion of a local loop may run from a customer's premises to either a central office or a digital loop carrier ("DLC"), there are two main variants of xDSL loops.

Home Run Copper Loops. The first type of xDSL loop can be referred to as a "home-run copper xDSL loop." This means that the copper portion of the loop extends from the customer's premises all the way back to the central office. Currently, approximately seventy percent (70%) to eighty percent (80%) of

---

3 The various types of DSL technologies and their distance limitations are summarized in Appendix A.

subscribers in the United States are served by local loops with copper extending all the way from the customer's premises to the central office. 4/

Even if within the required distance, the local loop must neither pass through load coils, have extensive bridge taps (extensions or spurs of a particular copper pair to other homes or routes in the feeder plant) nor be of poor copper quality. Additionally, copper loops that are adjacent in the same binder group can have loop assignment restrictions with high-speed xDSL technology because the associated high frequency produces interference. Nevertheless, since there are roughly 150 million total copper local loops in the U.S., the number of copper lines that qualify for xDSL using "home run" copper as the service delivery method is a significant percentage.5/ Given the aggressive deployment of DLC technology nationwide, home run copper will continue to decrease as a percentage of the total.

Enabling "home-run" copper lines with xDSL technology capable of delivering both voice and data requires a key piece of electronics at the central office: a Digital Subscriber Line Access Multiplexer ("DSLAM") with modulating and data multiplexing functionalities that communicates with the xDSL modem at the customer's premises. An xDSL loop that passes through a splitter before it connects to a DSLAM in the central office generates separate voice (at the 4 khz range and in analog format) and data (in a digital, packetized format such as Asynchronous Transfer Mode ("ATM")) streams that can be sent to voice and data switches respectively. A "home-run" copper xDSL loop, therefore, transmits voice and data as a single stream from the customer premises to the central office where it emerges as two discrete streams on the output side of a splitter and DSLAM. (see Attachment B). Recent advances in technology by equipment manufacturers allows for the splitter and DSLAM functionality to be combined into one piece of equipment. This development allows for the separate voice stream to be in a digitized format (e.g.- TDM) at a higher level (e.g.- DS-1 bit rate) which, together with the high speed data stream (e.g.- DS-3 bit rate & ATM format), are both converted to a switch- ready format.

Remote Digital Loop Carrier ( DLC) Loops. DLC electronics have been deployed by ILECs for at least 20 years. Basically this equipment is a remote

---

4/ See Arielle Emmet, "Multimedia: Making it Pay," America's Network, May 1, 1997 (estimating 20 percent DLC lines); "xDSL: Local Loop Access Technology," WWW3COM.COM (estimating 30 percent DLC lines).

5 See Statement of Charles J. McMinn, President and CEO, Covad Communications Company, before the Subcommittee on Communications, Committee on Commerce, Science, and Transportation, United States Senate, April 22, 1998, Transcript at 18.

extension of the switch that performs the analog to digital conversion of copper pairs as well as concentration and multiplexing functions in order to backhaul dial-tone services over fiber or T1 copper systems to the ILEC central office. This technology has been the primary relief vehicle for the local loop outside plant over the last 10 years, in lieu of large copper cable growth and replacement expenditures. Additionally, in the last ten years the digital voice streams originating from the remote DLCs have been integrated directly into the ILECs voice switch without demultiplexing to the baseband analog level and format.

If the copper portion of a local loop extends from the customer's premise only to the remote DLC that serves the customer, enabling the loop to exploit xDSL technology requires the placement of equipment with DSLAM and splitter functions at the remote site. (see Attachment C). The voice and data streams are separated and multiplexed at the DLC and carried to the central office in Time Division Multiplexing ("TDM") and Asynchronous Transfer Mode (ATM) (packetized) formats, respectively. In a fiber-fed DLC scenario, the two electrical streams are converted to optical streams at the remote location and are then carried over the same fiber to the central office. At the central office, the two telecommunications streams are converted back to separate electrical streams via a Fiber Optic Terminal System ("FOTS") and a Digital Cross Connect System ("DACS") and are ready to be switched by a circuit switch for voice and a packet switch for data. If existing or new copper-based T-1s are used instead of fiber for transport from the DLC to the central office, the conversion to and from optical signals can be omitted.

Same voice and data streams. The same voice and data streams emerge at the central office whether or not home run copper or DLC technology is used. The partial copper xDSL loop entails electronics between the customer's premises and the central office, but as with the home-run copper xDSL loop, two switch-ready voice and data streams emerge at the central office. Thus, the inputs and outputs are the same in both scenarios despite the different set of electronics in between.

The key is for the CLEC to get parity at the digital signal level (e.g., DS-1, DS-3, OC-N, etc.) and in signal format (e.g. ATM, TDM, etc.), and have cross-connection or a hand-off point for a switch ready (e.g. voice, data) signal. The relevant analogy to this situation is the fact that ILECs offer unbundled local loop T-1s in the same digital format and at the same digital level, regardless of whether the T-1 is delivered by home-run copper to the central office or partial copper to the DLC and fiber back to the central office.

Irrespective of the particular transmission method employed -- whether home-run copper or copper to the DLC plus fiber to the central office -- it is technically feasible with current vendor technology to hand off and pick up the voice and data streams carried over an xDSL loop at the central office on a per customer or carrier basis.