This situation is therefore clearly distinguishable from prior instances where the Commission has declined to exercise its ancillary jurisdiction over LEC billing and collection. In the Detariffing Order and the BNA proceedings, the Commission declined to require ILECs to offer billing and collection services to Operator Service Providers (OSPs).[43] The Commission has also ruled that ILECs may decline to offer billing and collection services to information service providers (IPs).[44]

Unlike OSPs or IPs, CMRS carriers have the potential to compete for the same customer minutes as the LEC. The ability of a LEC to forestall competition by declining to perform necessary billing services undermines the legitimacy of any claim regarding fear of customer complaints or objection to the carriers' services. Particularly where LECs offer billing and collection services to non-competing carriers but not for CPP, a LEC's discriminatory refusal to offer billing and collection services for CPP is suspect.

CPP does not involve either the unusually high per-minute rates and/or the objectionable content involved in the OSP and IP situations. As discussed below, AirTouch expects that state commissions will be involved in developing appropriate terms and conditions for CPP and customers will be provided with clear notice of the charges and carriers involved. This also significantly undermines any arguments based on a LEC's

---

[43]See, e.g., 102 F.C.C. 2d at 1170; "Policies and Rules Concerning Local Exchange Carrier Validation and Billing Information for Joint Use Calling Cards," Notice of Proposed Rulemaking, 6 FCC Rcd 3506, 3509 ("First BNA Notice").

[44]See "Audio Communication, Inc. Petition for a Declaratory Ruling that the 900 Service Guidelines of US Sprint Communications Co. Violate Sections 201(a) and 202(a) of the Communications Act," 8 FCC Rcd 8697, para. 13. (Comm. Car. Bureau 1993).

fear of customer complaints concerning CPP, or that the LEC would be associated with the CMRS carrier providing service. Several Bell Operating Companies (BOCs), do offer reasonable arrangements for billing and collection of CPP charges. LEC objections to CMRS requests to bill and collect for CPP are too likely to be simply a cover for anti-competitive interests.

Some LEC statements evidence an anti-competitive intent. SBC has prevented its LEC subsidiary Pacific Bell from offering billing and collection services requested by AirTouch for CPP. SBC has indicated that it will neither provide billing services directly nor enter into a contractual arrangement with any third-party billing services or "clearinghouse" provider in order to permit AirTouch to provide CPP. In the process, it stated forthrightly that "our ability to market additional products and services would be negatively impacted if we were to bill CPP on Pacific Bell's telephone bill."[45] SBC plainly does not want CPP to develop because it would inhibit Pacific Bell's ability to compete with other local carriers.

SBC apparently reasons that where Pacific Bell customers spend more on calls to CMRS customers than they previously did, those customers are less able to purchase new vertical services or other products and services from Pacific Bell. LEC's ability to thwart competition in this manner distinguishes this case from the situations involving OSPs and IPs who are not potential local exchange service competitors.

---

[45]Letter from David D. Kerr, Executive Director - Access & Interconnection Mktg to Scott Falconer, Vice President, AirTouch Cellular, (November 19, 1997) ("Kerr Letter")(Attached as Appendix B).

The Notice asks parties to comment on the scope of the Commission's authority, "[i]n light of the Local Competition First Report and Order and the Iowa Utilities Board decision.[46] The Commission has jurisdiction to act notwithstanding the fact that the underlying service being billed for may, in some cases, be an intrastate telecommunications service. First, ILEC billing and collection service is a communications service that is "incidental" to both the LECs local and interstate access services.[47] LEC billing and collection for CPP is therefore, arguably as much an interstate service as it is an intrastate service. Thus, the restriction on federal regulation of intrastate services contained in Section 2(b) and emphasized in the Iowa Utilities Board decision does not present a barrier to action.

Moreover, the Iowa Utilities Board decision limited the Commission's ability to establish rules that restrict State authority in situations where Congress has expressed an intention to have issues determined by the States.[48] In contrast, there is no need to restrict State authority over LEC billing and collection and Congress has not expressed an intention to have these issues decided primarily by the States. On the contrary, Congress has expressed an interest in a federal regulatory approach to CMRS, in order to promote continued investment in wireless services and service innovations,[49] a decision recognized

---

[46]Notice, para. 29; see supra n.5.

[47]See, e.g., Second BNA Order, 7 FCC Rcd at 3533, n.50.

[48]Iowa Utilities Board, 120 F.3d at 797-798.

[49]See Budget Act, Second Report and Order, GN Docket 93-252.

by the Iowa Utilities Board decision.[50] Thus, Commission action will not run afoul of the limitations established in Iowa Utilities Board.

This does not establish, however, that Section 332 is the source of the Commission's authority to require LECs to offer billing services needed for Calling Party Pays. Section 332 grants the Commission authority to "order a common carrier to establish physical connections" upon reasonable request of a CMRS provider.[51] In the Iowa Utilities Board decision, the Eighth Circuit upheld the Commission's authority under Section 332 to establish regulations governing these "physical connections" provided by ILECs to CMRS providers.[52] In this case, "physical connections" are not at issue.

Interconnection agreements for the exchange of traffic between ILEC and CMRS networks provide for reciprocal compensation for the services provided by one network provider to the other. For CPP, however, what is at issue is the ability of CMRS subscribers to offer their customers a service option, and to obtain billing and collection services from the ILEC in order to make this option economically viable.[53] Thus, the Commission's authority to act under Section 332 is not implicated in any way.

---

[50]See Iowa Utilities Board, 120 F.3d at 800, n.21.

[51]47 U.S.C. § 332(c)(1)(B).

[52]See supra, n.52.

[53]See, e.g., Notice, para. 27; see also California PUC, D. 90-06-025, 36 CPUC 2d 464, 511 (1990) (referring to CPP as a "LEC billing arrangement").

Since Section 2(b)'s prohibition on federal regulation of intrastate services is not implicated in this situation, the Commission may preempt state actions inconsistent with federal actions undertaken pursuant to Title I's ancillary jurisdiction. But preemption of state rules should not be necessary, unless a state prohibits ILECs from offering billing services to CMRS carriers to enable CPP or takes other action obstructing CPP.[54] The Commission's proceedings should simply be to develop and implement rules requiring LECs to offer the billing and collection services necessary to implement CPP.

Additionally, some forms of state action regarding ILEC billing and collection are also appropriate and can proceed in harmony with federal action. This is particularly true where an ILEC "holds out to the public" its billing and collection services, effectively subjecting those services to common carrier regulation. For example, in California, Pacific Bell has filed a tariff with the California PUC that provides that Pacific Bell will provide Billing and Collection services for providers of telecommunications related services, including wireless services, provided to Pacific Bell end users.[55]

Under the NARUC I test described above, Pacific Bell's billing and collection services are therefore properly considered common carrier services and must be provided

[54]Even where Congress has not completely displaced state regulation in a specific area, state law is nonetheless nullified to the extent it would negate federal authority over interstate communications. See, e.g., Louisiana PSC v. FCC, 476 U.S. 355, 375-76, n.4. (1986).

[55]Schedule Cal. PU.U.C. No. 175-T, Section 8.5.1, revised by Advice Letter No. 19005 (September 3, 1997). (copy attached as Appendix C).

on a just, reasonable and non-discriminatory basis.[56] Pacific acknowledges that this tariff "provides for the billing of an end user's wireless services," but somehow claims that the tariff somehow does not encompass land line calls made to cellular numbers.[57] Consequently, AirTouch has presently engaged the assistance of the California PUC to enforce the provisions of this state tariff. State action of this type is entirely appropriate and can proceed in harmony with federal activity requiring LECs to offer the billing and collection services necessary to implement CPP.

III. Other Barriers to CPP Such As "Leakage" Are Being Addressed by the Industry And No Regulatory Action Is Needed

Another significant barrier to CPP is the problem of uncollectible revenue, or "leakage." As the Notice recognizes, "leakage" occurs when the CMRS carrier is unable to identify the calling party, e.g., calls from hospitals and other aggregator locations, payphones (particularly coin-sent paid calls), calls billed to calling cards or credit cards. "Leakage" can also occur where the party initiating the call is another wireless providers, a CLECs, an Independent LECs, or an interexchange carrier.[58] As the Notice indicates, AirTouch has addressed this problem in Ohio by having subscribers that elect the CPP

---

[56]See supra n.28. The NARUC I court made clear that the proper test of whether a service is common carriage is whether the service is "held out" as available indiscriminately to either the public or such a substantial portion of the public as to make it effectively a common carrier service. See NARUC I, 525 F.2d 630, 644; National Ass'n of Regulatory Util. Comm'rs v. FCC, 533 F.2d 601, 608-09 (D.C. Cir. 1976) ("NARUC II ").

[57]Kerr Letter, Appendix B.

[58]Notice, para. 23.

service option agree to pay for calls that are uncollectible.[59] However, AirTouch believes a better solution is necessary to achieve the full consumer benefits possible.

Industry is working on solutions to the "leakage" problem that utilize a "clearinghouse" approach. The "clearinghouse" approach to leakage issues uses a third party who acts as a billing and collection agent for a CMRS carrier. The "clearinghouse" provider will secure billing arrangements with local carriers around the country, and collect necessary billing information, e.g., for calls originating from aggregator locations.

The clearinghouse provider then collects the revenues and distributes them to the proper CMRS operator, less a fee for its services. Not only does the clearinghouse save CMRS carriers from the burden of creating and administering billing arrangements with every carrier in the country, it provides a single collection point for all billing information. To date, some LECs have agreed to the clearinghouse approach, while others are continuing to study the matter. SBC, as noted above, has directed its LEC subsidiaries that it will not participate in any clearinghouse arrangements for CPP; again seriously harming the ability of CMRS carriers to offer CPP in areas where SBC owns the ILEC.

Other leakage issues are related to technical matters and network technology choices. For example, the Notice also observes that "not all LEC networks have the technical capability to exchange the billing information required for CPP," and that CMRS

[59] Id.

networks may also not have the technology to permit certain functions.[60] Presumably the Notice is referring to the Signaling System 7 ("SS7") out-of-band signaling technology that permits a more efficient exchange of billing information. However, both CMRS and LEC networks are evolving rapidly and carriers are working with manufacturers to develop technical solutions that provide the same degree of harmonization.

Smaller LECs for whom SS7 technology is not cost effective nevertheless must have SS7 connectivity in order to access certain databases, and thereby permit their customers to bill calls to a calling card. These smaller LECs acquire this connectivity either through a neighboring LEC or from an independent third party such as Illuminet. This connectivity also enables these LECs to pass the information necessary for CPP billing purposes. And there are other methods of exchanging billing information, e.g., through exchange of magnetic tapes. The primary obstacles to the "leakage" problems associated with CPP are not technical, but administrative and legal.

Technical issues related to CPP are matters subject to individual carrier business decisions concerning technology choices. Regulatory intervention to require use of a particular technology is not necessary. Provided that LECs are required to offer billing and collection services on just and reasonable terms, carriers can work out suitable arrangements for exchanging billing information without regulatory intervention.

---

[60]Notice, para. 24.

IV. There Is No Need For National Consumer Protection Rules Or Other Preemption In Order to Foster Calling Party Pays

The Notice seeks information regarding how the calling party can best be informed of charges for calls to CMRS phones, including the magnitude of these charges, and whether it would be in the public interest to develop a uniform national method to inform the calling party.[61] As the Notice observes, notification to landline callers in the US is often accomplished with the familiar 1+ dialing mechanism, with distinct NXX codes or with prerecorded branding statements.[62]

The Commission should not pursue efforts to develop a uniform national approach to customer notification. As the Notice recognizes, regulation of CPP is "a billing practice that may be regulated by a State as a term or condition under which [CMRS] service is provided."[63] Accordingly, consumer protection matters should be addressed by state authorities. AirTouch is willing to work with these state regulators to insure that consumers are fully informed about CPP charges. Generally, AirTouch has experienced few consumer complaints concerning CPP, either in the US or overseas.[64]

---

[61]Notice, para. 22.

[62]Notice, para. 20-21. The Notice also asks whether the consumer notification options discussed in the Billed Party Preference proceeding should be applied to CPP calls. Notice, para. 21, n.29.

[63]Notice, para. 27.

[64]In Spain, for example, less than 1% of Airtel customer complaint records are from fixed line customers who are concerned with the price of a fixed-to-mobile call.

Carriers should be free to develop appropriate methods for informing calling parties about the nature of their charges. AirTouch agrees that the use of 1+ dialing is widely recognized as an indication that toll charges will apply.[65] In some states, CMRS carriers utilize preambles that inform parties of the nature of the charges. In a competitive market, carriers have incentives to advertise their rates and to explain to consumers why rates for their services are attractive. Thus, there is little need for federal oversight of the methods used by CMRS carriers to inform wireline customers about CPP charges.

The Commission also seeks comment on whether notification to the calling party, prior to the completion of the call, is a sufficient mechanism to create a binding contractual agreement obligating the calling party to pay for any charges incurred.[66] It is widely recognized that a contract can be formed in these circumstances. A well-known example would be ordering food in a restaurant. The customer is informed of the options and prices, they select a product and/or service, and receive a bill after the product or service is delivered that is due and payable immediately.

In the telecommunications industry, for example, customers may engage in "casual calling" - the use of an interexchange carrier other than that presubscribed to the phone. There, the customer's use of the 10XXX code to access the network services of a particular carrier communicates a promise to pay for the services. The exchange of this

---

[65]The Communications Act defines "telephone toll service" as "telephone service between stations in different exchange areas for which there is made a separate charge not included in contracts with subscribers for exchange service." 47 U.S.C. § 153(47).

[66]Notice, para. 21.

promise in return for telecommunications services rendered is sufficient consideration to form a contract. A customer need not "presubscribe" to a carrier's services in order to form a contractual relationship with that carrier.

This contractual obligation is made even more clear by whatever notification arrangements are used to explain CPP to landline customers. The implied promise to pay for telecommunications services follows the use of those services after a suitable notification. Certainly the availability of a CPP option will require some customer education efforts, since it represents a change in the way landline customers understand the relationship between local phone service and wireless service. Our experience has been that customer complaints are relatively low. Again, this is likely because the present situation where a subscriber pays for incoming calls is in fact the aberration. Customers understand the commercial norm represented by CPP: the party choosing to place the call pays for the services.[67]

The Notice seeks comment on the extent to which the market will discipline the rates charged to the calling party for completing a local call.[68] The same competitive market forces that drive mobile rates lower for mobile subscribers will impact the charges imposed on wireline customers to reach mobile parties. With five to seven mobile providers in each market, landline to mobile rates will be a competitive part of the CPP

[67]Thus, for example, certain numbers use an identifying NPA code such as 800 or 888 to indicate that calls using these numbers differ from the commercial norm.

[68]Notice, para. 9, n.11.

offers available to mobile customers and will influence their purchase decisions. The vast majority of calls to mobile subscribers are made by people known to the mobile subscribers. Contrary to the Commission's belief, call recipients *are* likely to be concerned about the rates charged.

In addition to the discipline provided by mobile competitors, callers can choose alternative means of reaching mobile subscribers. Most mobile subscribers also retain a landline subscription, and can be reached via the fixed network. Given the current nature of mobile services as discretionary services, prices set too high will discourage calls to mobile networks. Mobile services are price elastic for both incoming and outgoing calls. Excessive calling charges would lead to lower mobile usage and reduced revenue for the mobile network operator. Consequently, CMRS carriers have ample incentives to maintain low rates for incoming calls and thereby increase incoming usage.

CONCLUSION

AirTouch applauds the Commission's interest in examining issues related to a Calling Party Pays service option. CPP will benefit the public interest and enhance consumer welfare by eliminating artificial disincentives for consumers to use CMRS services for incoming calls. CPP will also enhance consumer welfare and create economic efficiency by sending proper pricing signals to landline customers. CPP will create equity for wireless customers who will be able to directly control what they spend for telecommunications services, a privileged long enjoyed by wireline customers.

In order to make CPP a real option for consumers, however, the Commission should act to require all LECs to offer just and reasonable terms for billing and collection of the charges assessed on wireline customers for CPP calls. The Commission has jurisdiction to do so and such action would further important the statutory purposes of promoting increased options for consumers, lower rates for CMRS customers, and promoting local competition.

Respectfully submitted,

By: David A Gross

Kathleen Q. Abernathy
David A. Gross

AirTouch Communications
1818 N Street, Suite 800
Washington, D.C. 20036
(202) 293-3800

Charles D. Cosson
AirTouch Communications
One California Street, 29th Fl.
San Francisco, CA 94111
(415) 658-2434

December 16, 1997

Appendix A - Description of Calling Party Pays

Calling Party Pays ("CPP") is an optional network and billing service for Commercial Mobile Radio Service ("CMRS") subscribers. In a CMRS network, the radio channels and switch capacity of the network are occupied on both outgoing and incoming calls, creating relatively equal costs for both types of calls. In order to recover these costs, CMRS subscribers are presently responsible for air time charges incurred in both making mobile-to-land calls and in receiving land-to-mobile calls.

In the landline telephone network, some costs are recovered through a flat basic service rate for unlimited local calling.[1] Also, unlike other outbound landline calls to other network service providers, e.g., interexchange carriers ("IXCs"), no extra charges for outgoing landline calls to other CMRS networks are imposed. Instead, CMRS customers pay for incoming calls – a billing convention that restricts customers' ability to control what they spend. Thus, CPP offers CMRS subscribers a feature that replicates the billing convention used for almost all other telecommunications services and puts CMRS customers on equal footing with other consumers.

Two, and perhaps three telecommunications service providers – the local exchange carrier ("LEC"), the CMRS carrier, and perhaps a third-party Advanced Intelligent Network ("AIN") provider – join together to handle the various functions required to

[1]Other costs are recovered from charges to other carriers for interconnection and from implicit and explicit subsidies.

complete and bill and CPP call. While carriers may choose to develop alternate arrangements that better suit their needs, generally a CPP arrangement works as follows:

CMRS carriers establish CPP air time rates and charges, offer CPP billing options to their subscribers, and provide call screening, rating and recording for each CPP call made to a CMRS subscriber. Once a call is received by the CMRS network, the CMRS provider will first screen the call to determine whether it is to a CPP subscriber.

If so, an AIN or LIDB functionality is used to review the LEC's customer number information to establish billing capability, much as this technology is used to validate calling cards, collect calls, third number billed calls, etc. The AIN functionality also may generate an announcement to the calling party, although many states have determined that this is unnecessary and burdensome to consumers who dial 1+ to reach a cellular number and are educated to expect additional charges when using 1+ dialing. 1+ dialing (or a separate area code for mobile calls) is used in the U.S. in Arizona, New Mexico, Colorado, Ohio, Idaho, as well as in Canada, Europe and most of the world.

The CMRS carrier will then complete the call and trigger its customary recording functions. Rate tables are applied to these call records to develop billing information. The CMRS carrier then provides the LEC with this billing information, and the LEC bills the calling party on behalf of the CMRS carrier.

Charges appear on the landline customer's monthly telephone bill. This call flow is depicted graphically below:

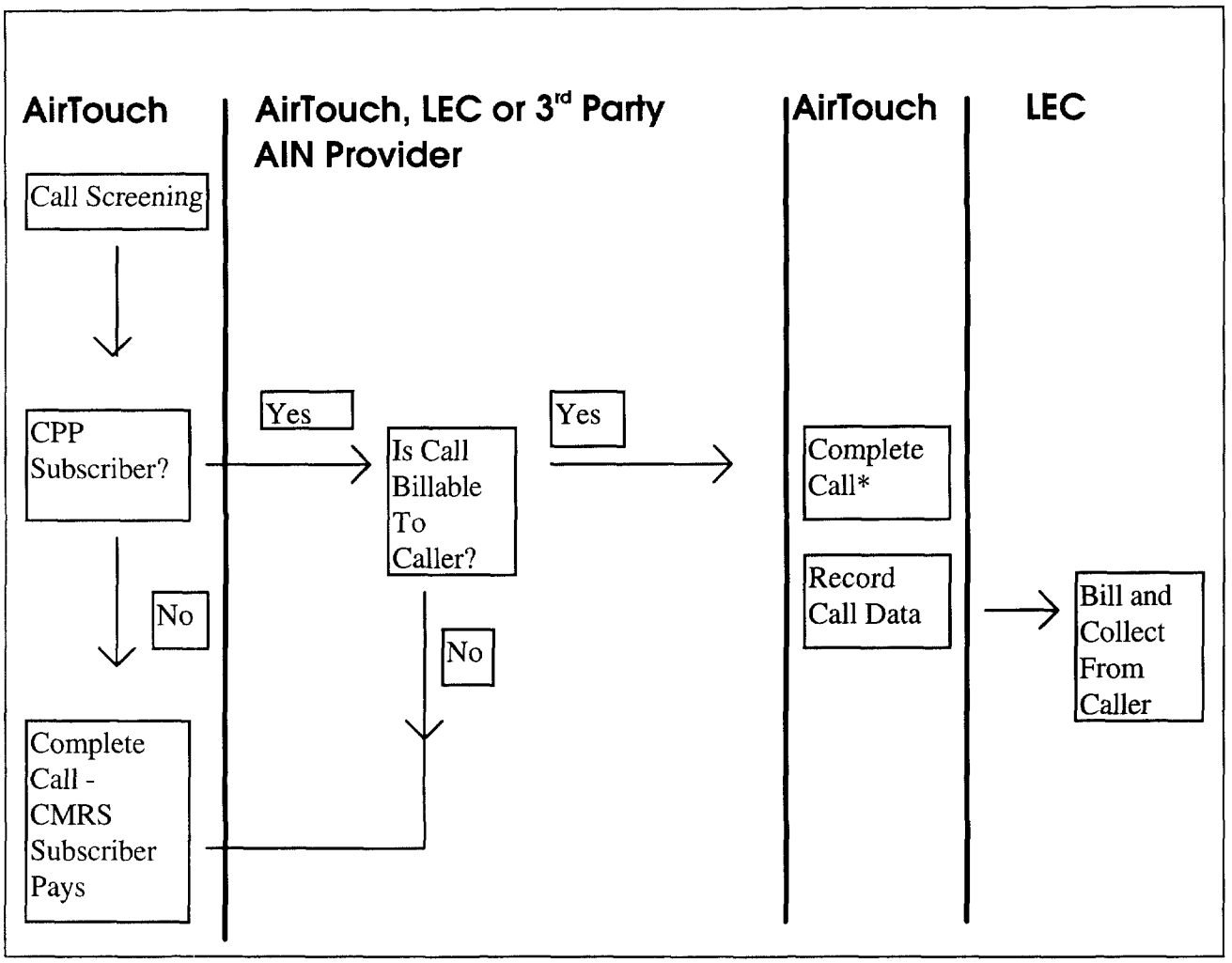

* In some jurisdictions, the AIN functionality includes playing a preamble or other announcement to the calling party, to inform him/her that additional charges will apply. The calling party then has an opportunity to disconnect without incurring any charges and the call is not completed if they do so.

Appendix B - Letter from David Kerr, SBC to Scott Falconer, AirTouch

David D. Kerr
Executive Director-
Access & Interconnection Mktg.

Southwestern Bell Telephone
One Bell Center
Room 17-B-1
St. Louis, Missouri 63101
Phone 314 235-3730

Southwestern Bell

November 19, 1997

Mr. Scott Falconer
Vice President
AirTouch Cellular
2785 Mitchell Drive, MS 9-2
Walnut Creek, California 94598

Dear Mr. Falconer:

This letter provides Pacific Bell's position regarding billing and collecting for Calling Party Pays services.

It is our policy that we will not bill for Calling Party Pays (CPP) service. We are willing to provide Billing Name and Address information if AirTouch Cellular wishes to bill and collect CPP itself or by other means.

We have determined that it is not in our best interest to bill and collect for CPP at this time. We believe our ability to market additional products and services would be negatively impacted if we were to bill CPP on Pacific Bell's telephone bill. In addition, we have been evaluating the possibility of reducing billing in several areas of non-traditional charges.

The California Tariff provides for the billing of an end user's wireless services. We do not believe this encompasses land line calls which an end user might make to cellular numbers. CPP was never contemplated as an option when the tariff was approved.

Lastly, the FCC recently issued a Notice of Inquiry regarding Calling Party Pays in which one of the issues the FCC seeks comments on is whether the FCC has the authority to require local exchange companies to provide billing information and services for CPP. We intend to file comments in response to the FCC's notice and closely follow the proceedings. We intend to fully comply with any decision the FCC reaches as a result of its Inquiry.

Please call me on 314-235-3730 if you wish to discuss further.

Sincerely,

David D. Kerr

Appendix C - Section 8.5.1. of Pacific Bell's Billing and Collection Tariff

ACCESS SERVICE

ADVANCE COPY

8. Billing and Collection Services (Cont'd)

8.5 Billing and Collection Services for Telecommunications Related Services

8.5.1 General Description

The Utility will provide Billing and Collection Services for providers of telecommunications related services and/or telecommunications related equipment as set forth in this Section 8.5. Services billed to end users under this Section 8.5 include, but are not limited to, Telephone Answering Service, Paging, Videotext, Voice Messaging and Voice Response, Electronic Facsimile, Telegrams by Electronic Facsimile, Alarm, VANs (Value Added Networks), Database Companies, EDI (Electronic Data Interchange), E-Mail (Electronic Mail), Electronic Transaction Services, Wireless Services, Telephone Directory Advertising and Video Services. Billing under this tariff does not include 900,976 or other information services. (T) (T)

The Utility will provide end user account information to the Customer only as set forth in 8.7 following.

The Utility will not deny basic telephone service solely for the end user's failure to pay any transaction billed under this tariff section. In the event a residential end user's telephone service has been permanently discontinued with a balance owing, any amounts due for the services billed under this tariff will not be included in the calculation of deposits to reconnect or establish service.

The Utility will not provide services under this tariff to any Customer without authorization by the Commission to provide intrastate telecommunications services, to the extent such authorization is required by law.

The following types of billing services will be offered:

(A) Transaction Billing: the guiding of Customer rated transactions to a valid end user account for subsequent Bill Rendering in accordance with the Utility's own procedures for handling Utility transactions and all relevant Commission requirements. The Utility's process for Transaction Billing is the same as described for Message Billing in Section 8.3 preceding.

Continued