EX PARTE OR LATE FILED

DOCKET FILE COPY ORIGINAL

Frank S. Simone
Government Affairs Director

Suite 1000
1120 20th Street, N.W.
Washington, DC 20036
202 457-2321
FAX 202 457-2165
fsimone@lgamgw.attmail.com

RECEIVED

JUN 25 1998

FEDERAL COMMUNICATIONS COMMISSION
OFFICE OF THE SECRETARY

June 25, 1998

Ms. Magalie Roman Salas, Secretary
Federal Communications Committee
1919 M Street, N. W. – Room 222
Washington, D. C. 20554

Re: *Ex Parte*, CC Docket No.97-208, Applications of BellSouth Corp., BellSouth Telecommunications, Inc., and BellSouth Long Distance, Inc. Pursuant to Section 271 of the Communications Act of 1934, as amended, To Provide In-Region InterLATA Service in South Carolina; Public Notice DA 98-139 (rel. January 17, 1998)

Ms. Roman Salas:

Please include a copy of the attached response to Ameritech's March 2, 1998 *ex parte* on Unbundled Local Switching in the record of the above-referenced proceedings.

Two copies of this Notice are submitted to the Secretary of the FCC in accordance with Section 1.1206(a)(2) of the Commission's rules.

Sincerely,

ATTACHMENT

cc: K. Brown
D. Stockdale
C. Mattey
M. Pryor
J. Jennings
E. Bash
W. Bailey

No. of Copies rec'd 0+1
List A B C D E

Recycled Paper

RECEIVED
JUN 25 1998
FEDERAL COMMUNICATIONS COMMISSION
OFFICE OF THE SECRETARY

AT&T's Response to Ameritech's March 2, 1998
Ex Parte on Unbundled Local Switching (CC Dkt. 96-98)

In this memorandum AT&T responds to Ameritech's March 2, 1998 *ex parte* in CC Docket 96-98. In its *ex parte*, Ameritech contends that the Commission must abandon one of the underlying premises of the Act and the Commission's *First Order on Reconsideration* – *i.e.*, that the purchaser of unbundled local switching has the "exclusive right" to provide all features, functions and capabilities of the switch.[1] As a result of its flawed analysis, Ameritech further contends that the purchaser of unbundled local switching should not be entitled to collect originating or terminating access, nor should such a carrier be entitled to reciprocal compensation.

Ameritech's *ex parte* is its latest attempt to thwart the Commission's market-based approach to lowering of access charges through CLEC deployment of services provided using unbundled network elements. Ameritech raises the same tired argument that the Commission has repeatedly rejected. The Commission should again reject this bid by Ameritech to protect its access war chest and to forestall incipient competition. Such rejection is especially appropriate, because Ameritech perceives a "problem" requiring solution that does not exist in reality, but arises solely through Ameritech's faulty analysis of the Commission's orders.

The only legitimate issue raised by Ameritech – that for certain calls ILECs presently lack the capability to perform terminating recording – can be solved on an interim basis through the development of reasonable mutually agreeable surrogates that acknowledge the right of UNE CLECs to utilize UNEs to provide access and termination services, and to receive access payments and reciprocal compensation, and that result – to the greatest degree possible – in the same financial outcome for such CLECs. This is the approach that has been implemented, and is being pursued, by other ILECs.

Ameritech's "Exclusive Use" Argument Rests on a Faulty Premise

Ameritech's argument is based on a perceived inconsistency between the *First Order on Reconsideration* and the manner in which CLECs and IXCs "use" local switching. Ameritech claims that the FCC "appears to suggest" that the purchaser of unbundled local

---

1 Among other things, Ameritech asks the Commission to rule that "use of Section 251(c)(3) unbundled interoffice transmission facilities to originate or terminate interexchange traffic is contrary to the Act" unless the requesting carrier also provides local exchange service with that element. AT&T already has rebutted this position in its previously filed comments in this docket. *See* AT&T Corp. Comments on Further Notice of Proposed Rulemaking Released August 18, 1997 (filed Oct. 2, 1997); AT&T Corp. Reply Comments on Further Notice of Proposed Rulemaking Released August 18, 1997 (filed Oct. 17, 1997). AT&T therefore does not address this Ameritech position here.

switching "is entitled to 'exclusive use' of all switching functionality for any communication to or from [the unbundled local switching] line port." *Ex parte*, p. 1. Yet, the Commission statement which purportedly creates this "appearance" never uses the words "exclusive use." Instead, the Commission makes clear that the purchaser of unbundled local switching to serve an end user "obtains the ***exclusive right*** to provide all features, functions and capabilities of the switch . . . ***for that end user.***" *First Order on Reconsideration*, Docket 96-98, released Sept. 27, 1996, ¶ 11 (emphasis added).

"Exclusive use" and "exclusive right to provide" plainly do not have the same meaning. For example, when an interexchange carrier originates a call from, or terminates a call to, an end user it obtains access services from the local provider, and thereby "uses" the local switch. However, it is precisely because the CLEC has the "exclusive right" to provide all features, functions, and capabilities of the unbundled switch that it is the provider of exchange access for that end user, and therefore is entitled to bill the IXC originating and terminating access charges to compensate the CLEC for the IXC's "use" of the CLEC's switching. The Commission thus rightly held that when a CLEC purchases an unbundled local switching element to serve <u>its</u> <u>customer</u>, that CLEC is the only carrier serving <u>that customer</u> for local exchange service, for exchange access service, and for local transport and termination (which creates the right to receive reciprocal compensation).

Under the Act, when a CLEC's customer originates a call, the CLEC provides the switching functionality to originate that call through use of the unbundled local switching element. Similarly, when the CLEC's customer receives a call, the CLEC provides the ability to receive the call through use of the unbundled local switching element. When the CLEC's end user originates a call to another CLEC's customer, it is the receiving end user's carrier – and NOT the originating CLEC – that is purchasing unbundled local switching at the terminating end of the call. If the receiving CLEC incurs a cost to terminate the call, it is entitled to reciprocal compensation from the originating CLEC.

The Real Issue Is Ameritech's Failure to Implement Its Existing Capability to Provide Terminating Usage Data and Its Current Inability to Record Certain <u>Terminating Usage.</u>

Ameritech's real issue is that it has not – as other ILECs have -- made the effort to sort the terminating usage for both intraLATA and interLATA toll calls by terminating CLEC, where such calls are routed through an IXC point of presence (POP), and that it cannot record the terminating usage for local calls and intraLATA toll calls that are not routed through the IXC's POP. Yet, as set forth below, this failure and inability on Ameritech's part does not warrant subverting the Act's plain language that a carrier may use unbundled network elements to provide any service, including exchange access as well as transport and termination of local calls.

A CLEC providing service using unbundled local switching does not have access on its own to terminating usage data that indicates how many calls/minutes its end users received and what carriers originated those calls. It must rely on the ILEC for this data.

Ameritech, however, unlike other ILECs, has not undertaken to develop a means of sorting, by terminating CLEC, existing terminating access records for intraLATA toll calls and interLATA calls that are routed through an IXC POP. Further, where such terminating usage information cannot technically be provided today – *i.e.*, for local calls and intraLATA toll calls that are not routed through an IXC POP– Ameritech has not even acknowledged the terminating CLEC's right to receive such terminating access and reciprocal compensation. Nor has Ameritech proposed or been willing to negotiate a reasonable surrogate for estimating such access and reciprocal compensation. Instead, Ameritech seeks to rely on its own inaction and current technical inability to vitiate the Act's requirements. There is no need to do so.

ILECs Must Implement Existing Capability to Record and Provide Terminating Access Information.

Clearly, where an ILEC has the capability to provide terminating usage information, it must do so. Such capability exists today for intraLATA and interLATA toll calls that are routed through an IXC POP. IntraLATA and interLATA toll calls terminating to an ILEC end office from an IXC POP are recorded at either the end office, if the calls terminate on a dedicated trunk from the IXC, or at the ILEC tandem, if the calls terminate through the tandem.

Initially, the difficulty with those terminating recordings was that the ILEC could not sort out the traffic by the telephone number of the end user receiving the traffic, and therefore could not sort out terminating access traffic for each UNE-based CLEC in the end office. Some BOCs have solved that problem by developing a database matching solution. The recorded terminating usage is compared to a line owner database and the CLEC traffic is sorted out for transmission to the CLEC which terminated the call. In this manner, the CLEC receives the information necessary to bill the IXC for terminating access. Ameritech apparently has not chosen to implement this existing capability. The fact that other ILECs have been able to do so effectively moots Ameritech's claim that a special "solution" must be implemented due to a lack of technical capability.

Ameritech's alternative "solution" is, moreover, as disingenuous as it is infeasible, inefficient, and inconsistent with industry practice and Commission policy. Specifically, Ameritech claims that the provider of local transport access services should also provide local switching access services to IXCs. Under this "proposal," Ameritech claims that the CLEC should purchase interoffice transport between the Ameritech end office switch and the IXC POP, and the IXC should use that dedicated facility for the origination and termination of traffic only for that CLEC's local customers. Otherwise, Ameritech will continue to bill the IXC for exchange access services including local switching.

As an access provider, however, Ameritech should be aware that it is the IXC that today arranges for transport from its POP to the ILEC end office, and does so on a basis unbundled from local switching. The IXC, not the LEC, chooses whether the transport will be dedicated or tandem switched, and, in those instances where access alternatives

exist, which access provider will provide the transport. Ameritech, however, would have the Commission depart from this industry practice and the Commission's own pro-competitive access policies to require the inefficient – and infeasible – fracturing of interexchange traffic that originates from, and terminates to, a single end office, among these CLEC facilities for each CLEC obtaining unbundled switching at each end office. This would destroy existing network efficiencies, and in all events could not feasibly be implemented by interexchange carriers today.[2] It also would ensure that Ameritech continues to reap supracompetitive access rents, even in the face of vigorous UNE-based competition.

Where The Capability to Provide Terminating Usage Data Does Not Currently Exist, ILECs Must Implement Reasonable "Solutions" that Account for Differences Among ILECs.

AT&T is aware of only two situations in which the ILEC currently does not have the capability to provide the required terminating usage information: (1) local calls (reciprocal compensation); and (2) intraLATA toll calls that are not routed through an IXC POP (terminating access). Though industry standards bodies are working on long term solutions to this problem, including the adoption of local service provider identification codes that identify the originating and terminating CLEC on local calls, there currently exist a number of at least interim solutions that could be implemented to provide an acceptable result, *i.e.*, one that would approximate to the greatest degree possible the financial outcome that would result if the ILEC could perform terminating recording and billing. There is no universal solution that would apply to each ILEC, however, because the "best" solution may vary according to the particular UNE rate element structure, rate applications and prices imposed by a particular ILEC. [3]

---

2 *See* AT&T Corp. Comments on Further Notice of Proposed Rulemaking Released August 18, 1997 (filed Oct. 2, 1997), at 8-9 and n.13.

3 For example, in Ameritech, the unbundled local switching rate for originating a call is equal to the unbundled local switching rate for terminating a call. The rate applies only when a call is completed. As a result, UNE switching charges for originating local minutes equals the UNE switching charges for terminating local minutes. In contrast, in Bell Atlantic South, the unbundled local switching rate for originating a call is higher than the unbundled local switching rate for terminating a call and is applied for call attempts. As a result, the UNE switching charge for originating local minutes is higher than the UNE switching charge for terminating local minutes. An acceptable solution for Ameritech, therefore, would not be acceptable for Bell Atlantic South.

CONCLUSION

Ameritech is asking the Commission to change its policy and to ignore the requirements of the Act in order to solve a problem – the lack of terminating usage recording – that does not exist for most calls, and, where it exists today, can be resolved on at least an interim basis through the use of reasonable surrogates. Unlike Ameritech, other BOCs have been willing to work toward implementing solutions that acknowledge the right of UNE-based CLECs to receive access and reciprocal compensation and result to the greatest extent possible in the same financial result for the CLEC and the ILEC. Ameritech should do the same.

EX PARTE OR LATE FILED

1401 H Street, N.W.
Suite 1020
Washington, D.C. 20005
Office 202/326-3821
Fax 202/326-3826

Ameritech.

Lynn Shapiro Starr
Executive Director
Federal Relations

March 2, 1998

Ms. Magalie Roman Salas
Secretary
Federal Communications Commission
1919 M Street, NW
Room 222
Washington, DC 20554

Written Ex Parte Statement
CC Docket 96-98

Dear Ms. Salas:

Please enter the attached ex parte in the record of this proceeding, including the Further Notice of Proposed Rulemaking released on August 18, 1997 (FCC 97-295).

In the attached ex parte, Ameritech sets forth its concerns that "exclusive use" language pertaining to switching functionality contained in the First Order on Reconsideration is inconsistent with Section 51.319 (c) of the Commission's Rules and Regulations. Ameritech urges the Commission to clarify that the purchaser of a line port obtains use of the local switching functionality, but not exclusive use, and that the purchaser of a trunk port also obtains the right to use shared switching functionality to enable it to complete trunk to line calls for its local exchange customers. In addition, where both originating and terminating carriers claim use of the shared switch fabric, the originating carrier should be charged for the shared switching functionality.

Sincerely,

Lynn Starr

Attachment

No. of Copies rec'd 022

UNBUNDLED LOCAL SWITCHING:
"Exclusive Line-Port Use" Or "Originating Carrier Pays"

Introduction: In response to its pending Further Notice of Proposed Rulemaking in Docket 96-98, released on August 18, 1997 (FCC 97-295 "Further Notice"), the Commission should rule that use of Section 251(c)(3) unbundled interoffice transmission facilities to originate or terminate interexchange traffic is contrary to the Act – if the requesting carrier does not also provide local exchange service with that network element. Section 251(c)(3) of the Act cannot be used by interexchange carriers as a substitute for exchange access service. Such an interpretation of Section 251(c)(3) would be in conflict with Sections 251(g), 251(i) and 254 of the Act. (See Comments and Reply of Ameritech dated October 2, 1997 and October 17, 1997, Docket 96-98).

Ameritech is filing this ex parte, which addresses *unbundled local switching*, because the Further Notice which addresses *interoffice transport* refers to, and may rely upon, the First Order on Reconsideration in Docket 96-98. (See Further Notice at ¶¶ 60, 61 and note 160.) The Commission's First Order on Reconsideration correctly concluded that unbundled local switching cannot be used exclusively to provide exchange access. Despite this correct outcome, Ameritech is concerned that certain language in the First Order on Reconsideration is inconsistent with the Commission's existing regulations, and, if relied upon, would undermine the Commission's procompetitive policy to encourage efficient local entry because of the significant and costly implementation problems it creates.

The Issue: On September 27, 1996, in its First Order on Reconsideration in Docket 96-98 the Commission appears to suggest that the purchaser of an unbundled local switching (ULS) line port is entitled to "exclusive use" of all switching functionality for any communication to or from that line port. The FCC described unbundled local switching network as follows:

> The unbundled switching element, as defined in the First Report and Order, includes the line card, which is often dedicated to a particular customer. Thus, a carrier that purchases an unbundled local switching element to serve an end user effectively obtains the exclusive right to provide all features, functions and capabilities of the switch, including switching for exchange access and local exchange service, for that end user. ¶ 11. (emphasis added)

As stated, this "exclusive use" language is inconsistent with the Commission's existing regulations applicable to unbundled local switching if it is meant to apply to call termination. See Rule 51.319(c). The First Order on Reconsideration – unlike Rule 51.319(c) – is based on a false technical premise. The "exclusive use" interpretation

ignores the fact that all users of ports have access to the same switching functionality for intraswitch calls. Likewise, for interswitch calls, the Commission's existing Rule 51.319(c) correctly provides that the purchaser of an unbundled trunk port has the right to use shared switching functionality to complete local calls to any other port in that terminating switch. Therefore, Rule 51.319(c) is consistent with the engineering fact that a local switch has the capability to connect a particular line port to a multiplicity of line ports and trunk ports. And, a variety of trunk ports can all connect to a single line port. Obviously, two different switch port users, the one making the call and the one receiving the call, cannot each have "exclusive use" of the same switching functionality at the same time.

Implementation Problems The "exclusive use" language also causes significant technical problems that make implementation of unbundled local switching unnecessarily difficult and costly. If only the line port purchaser can use shared switching functionality – and the originating carrier that purchases a trunk port in that switch cannot use such shared functionality – then new network recording capability must be added to every end office switch and to the existing message record for each local call. These new functionalities must be implemented by every incumbent local exchange carrier. These significant network changes would be required to enable the recording of terminating usage and the identification of the originating local carrier. None of these capabilities exists today.

On the other hand, these significant (and unnecessary) network costs and delays would not be required, if the originating local exchange carrier that purchases unbundled interoffice transport and unbundled trunk ports is permitted to access the shared switching functionality at the terminating switch to complete its end users' calls. The originating carrier that purchased the trunk port would simply be charged for the use of originating and terminating shared switching functionality to complete the call. This simple and straight-forward result is consistent with Rule 51.319(c); but it does not appear consistent with the Commission's "exclusive use" interpretation in the First Order on Reconsideration if such interpretation applies to call termination.

by whom?

Requested Relief Accordingly, the Commission should conform its First Order on Reconsideration to its existing regulation. The Commission should clarify that the purchaser of a line port obtains use of the shared switching functionality, but not exclusive use. The Commission should also reaffirm – as Rule 51.319(c) currently provides – that the purchaser of a trunk port obtains the right to use shared switching functionality to enable it to complete trunk port to line port calls for its local exchange customers. Finally, where both originating and terminating carriers claim to use the shared switching functionality, the originating carrier – as the initial cost causer – should be charged for the shared switching functionality. If the Commission provides these slight clarifications, it will ensure a technically sound public policy result and avoid significant (and unnnecessary) network implementation costs and delays.

1. The "Exclusive Use" Language Is Based On A False Technical Premise.

The notion that the purchaser of the line port obtains the "exclusive use" of all switching functionality for calls that both originate from and terminate to that customer is technically incorrect. In fact, many other carriers that purchase line ports and trunk ports to provide local service may use the same shared switching functionality to complete calls to the customer served by that line port. A few call-flow examples may be helpful.

Call-Flow Examples

A. Intraswitch Calls

The fallacy of the "exclusive use" assumption is best illustrated by local intraswitch calls.

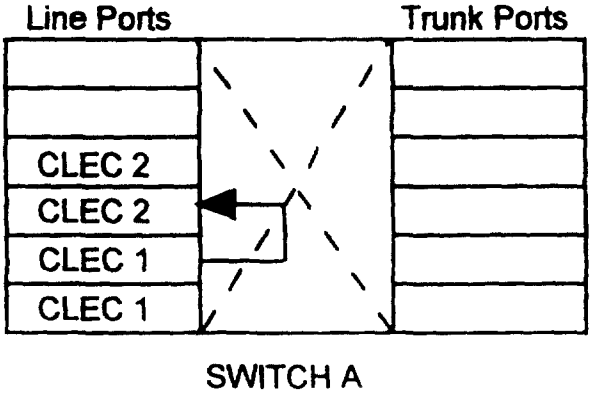

For example, assume in Switch A two requesting carriers have purchased unbundled local switching "line ports" to serve their respective customers. If a customer of CLEC 1 calls a customer of CLEC 2, both carriers cannot obtain "exclusive use" of the same local switching functionality for the same call. The switching fabric is a shared function used by both carriers to originate and terminate calls for their local customers. If a customer of CLEC 1 calls a customer of CLEC 2, the originating carrier pays for the use of the switching functionality to complete the call to the customer of CLEC 2. No one would suggest that CLEC 1's use of the switching functionality to complete the call is improper because it doesn't provide CLEC 2 with the "exclusive use" of the switching capability for its customer served by the line port it purchased. The fact that the line port is a dedicated functionality does not mean that all shared functionality of the switch is somehow transformed into "exclusive use" for that particular line port; it does not.

B. Interswitch Local Call

This is further illustrated by a local interswitch call. This example assumes that the originating carrier, CLEC 1, purchases interoffice transport facilities and trunk ports at the originating and terminating switch locations. It also assumes CLEC 1 and CLEC 2 purchase line ports to serve their respective end user customers.

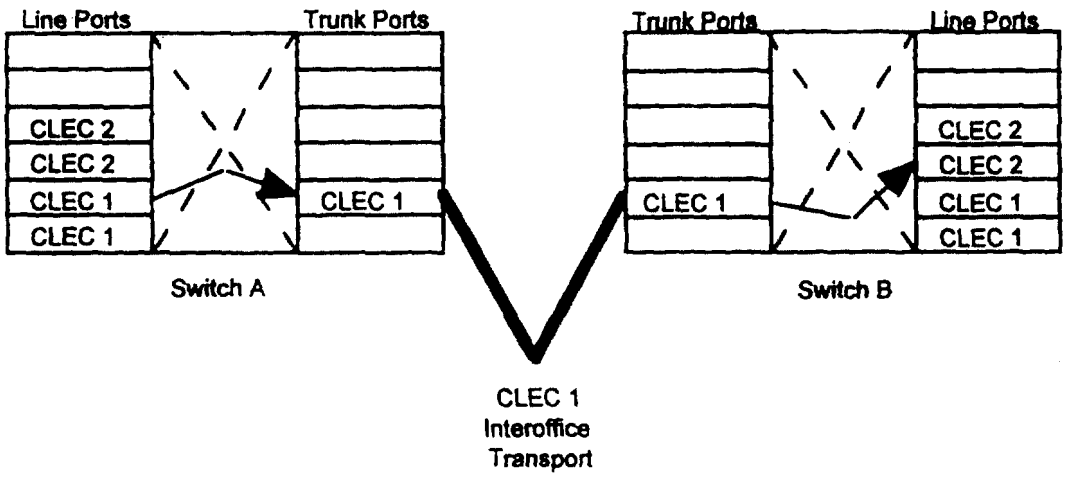

When CLEC 1's customer in Switch A calls CLEC 2's customer in Switch B, the originating carrier providing local service (in this example, CLEC 1) should be able to obtain access to: ULS switching for originating the call in Switch A, trunk ports at both Switches A and B, interoffice transport between Switches A and B, and ULS switching in Switch B to terminate the call to the line port of the called end user. The call is then "handed off" at the "dedicated" line port of CLEC 2's customer in Switch B. Because the ULS line port and the loop are non-traffic sensitive, flat-rated charges, CLEC 2 has no additional usage sensitive costs to recover for completing the call. This approach eliminates the significant network-related costs that would be required to record usage and carrier identity at the terminating end office because such recording would not be required, the originating ULS carrier would pay for terminating switching to complete the call.

C. IntraLATA Toll Call

The same basic network configuration and network element charges discussed above in connection with an interswitch local call would also apply to an intraLATA toll call, if the originating carrier has obtained access to interoffice transport and trunk ports to complete the calls between the two switches within the LATA. However, if the originating local carrier has not acquired such interoffice transport, then the call would be

carried by the pre-subscribed intraLATA toll provider for that end user. In that case, the intraLATA toll carrier would bill the end user customer for the call and would be charged originating and terminating exchange access by the ILEC who provides the facilities used to transport and terminate the call.

D. InterLATA Calls

This same result would apply in the case of an interLATA call.

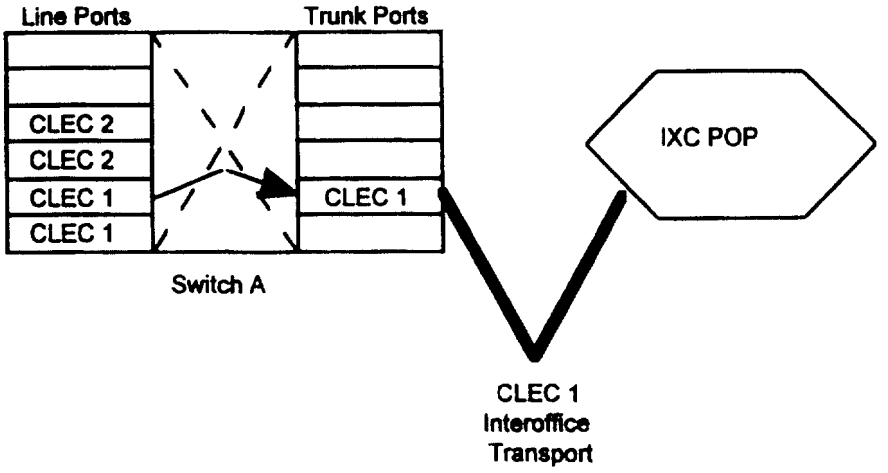

If the CLEC who provides local service to the originating customer has arranged for interoffice transport from the originating switch to the POP, the incumbent LEC would bill the CLEC unbundled network element prices for switching (including usage and trunk ports) and interoffice transport charges. The CLEC would then bill exchange access, whether it be terminating or originating, to the interexchange carrier for all calls that originated or terminated to its local customer.

On the other hand, if the CLEC had not arranged for interoffice transport to the IXC's POP, then the incumbent LEC would carry the call as it does today to the presubscribed IXC for that end user. The ILEC would then bill, as appropriate, originating or terminating exchange access to the presubscribed IXC. This latter result is required because, as discussed in Ameritech's comments in the Further Notice, an interexchange carrier that does not provide local service to that customer cannot use unbundled network elements solely as a substitute for exchange access service.

* * * *

As these call-flows demonstrate, a new entrant that purchases a line port to serve a specific local customer does not become the "exclusive" provider of all switching functions when a call terminates to that end user.

2. The "Exclusive Use" Language Is Inconsistent With The Commission's Existing Unbundled Switching Regulation: Rule 51.319(c).

The "exclusive use" interpretation is inconsistent with the Commission's existing regulations because – unlike Rule 51.319(c) – the "exclusive use" position overlooks the fact that carriers purchasing ULS trunk ports have the same right to use the same switching fabric as line port purchasers. In contrast, the Commission's existing definition of local switching includes both line-side and trunk-side facilities: "The line-side facilities include the connection between a loop termination at, for example, the main distribution frame, and a switch line card." At the same time, "trunk-side facilities include the connection between, for example, trunk termination at a trunk-side cross connect panel and a trunk card." Moreover, the "basic switching function" includes the function of connecting "lines to lines, lines to trunks, trunks to lines, trunks to trunks." See ¶ 412, and Rule 51.319(c)(1)(i)(C). (emphasis added)

Nowhere in the Commission's regulations is there a requirement that a trunk port be dedicated to a particular end user. In fact, many different trunk ports in a local switch may terminate traffic to the same line port. Since dedicated interoffice transport is unbundled from switching, the purchaser of such transport is required to purchase trunk ports at both ends of each interoffice transport facility to gain access to the shared switching functionality to originate or terminate calls. This is true whether or not such carrier purchased a line port in both the originating and terminating end office. For these reasons, the First Report and Order and the Commission's regulations entitle the purchaser of the trunk port to obtain the capabilities of the switch which include "the basic switching function of connecting . . . trunks to lines . . . ." See Rule 51.319(c)(1)(i)(C). The Commission's sole focus on the line port in its First Order on Reconsideration is, therefore, too narrow because it omits consideration of switching and trunk ports for call termination. Therefore, it should be conformed to be consistent with the existing regulations.

3. The "Exclusive Use" Interpretation Will Undermine The Commission's Procompetitive Policy To Promote Efficient Local Entry.

The fiction that the purchaser of the line port controls all local switching for both outgoing and incoming calls for that line port will also undermine the Commission's procompetitive policies to encourage efficient local entry. That is because the "exclusive use" notion creates severe technical problems, significant delays and unnecessary costs.

Neither the existing exchange message records nor the incumbent LECs' local switches have the capability to identify or record the data necessary to bill reciprocal compensation and access charges for terminating traffic. This recording capability currently does not exist and, unless the Commission clarifies this position, it would require a considerable expenditure of time and money to implement. Moreover, originating local carrier identity currently is not contained in the industry standard exchange message record. Although

the billing forums are looking at this issue, there is no immediate solution and switching vendors have not committed to any development schedule to address this issue. Therefore, it is currently impossible to identify, even if terminating usage was to be recorded, the identity of the originating local exchange carrier. Significantly, this undisputed limitation would be irrelevant if the originating ULS carrier was charged both originating and terminating unbundled local switching.

4. The Commission Should Conform Its First Order On Reconsideration To Its Existing Regulations.

This situation can be easily and equitably resolved by the Commission by conforming its discussion in the First Order on Reconsideration to its existing regulations. The Commission should clarify that the purchaser of a line port obtains use of the local switching functionality, but not exclusive use. The Commission should also reaffirm – as Rule 51.319(c) currently provides –that the purchaser of a trunk port also obtains the right to use shared switching functionality to enable it to complete trunk to line calls for its local exchange customers. Finally, where both originating and terminating carriers claim use of the shared switch fabric, the originating carrier – as the initial cost causer – should be charged for the shared switching functionality.

By adopting these changes, the Commission would avoid the extensive administrative burdens of two ULS carriers being required to bill each other on virtually all calls between their customers. And, as a related matter, these clarifications would eliminate the very real price arbitrage possibility that is generated when the price for terminating unbundled local switching is lower than the price for reciprocal compensation termination. For example, assume that a customer of an incumbent LEC or a reseller of an incumbent LEC makes a local untimed call to a customer served by a ULS carrier in a different switch. Under the "exclusive use" scenario, the originating carrier would bill its customer on an untimed, flat-rated basis. The terminating ULS carrier would be billed on a per minute unbundled local switching rate and would then charge reciprocal compensation to the originating carrier at its reciprocal compensation termination rate. In this case, it is very feasible that the originating carrier's revenue (either at retail or wholesale) would be significantly less than the net of the reciprocal compensation termination charge and ULS usage. This arbitrage possibility is eliminated if the originating ULS carrier is charged unbundled local switching for both origination and termination of the call and the terminating ULS carrier is not charged for switching usage..

If the Commission provides the slight clarifications described above, it will provide for a technically sound public policy outcome. In addition, it will avoid the significant and unnecessary network costs and technical feasibility issues associated with implementing unbundled local switching in a manner consistent with the "exclusive use" interpretation.