		Mbps or both; Options: Digital Modulator

Type of Microwave Equipment: ENG Receiver

Manufacturer	Model	Key Features
Nucomm	BDC-2-1	The BDC-2-1 supports agile tuning; Includes Low Noise Amplifier, bandpass filter, and frequency converter; currently under development
Wegener	Loop Test Translator	70 MHz input, L-band output (950 to 2050 MHz); Low Phase Noise; Digital Video Ready; Synthesized Frequency Control in 10 MHz increments
Continental Microwave / RF Technology	UCL Series UCL-20	Frequency range: 1.7 to 2.4 GHz; Output: 70 MHz IF signal; Dual Down conversion; RF channels: Field selectable channels in 100 KHz steps across 500 MHz; Includes low noise amplifier; full feature '1 box'; dynamic range: -60 to –112 dBw terminals; noise figure: 3 dB nominal
California Microwave / MRC	TBR-2	Triband portable microwave receiver, up to 3 bands from 2 – 15 GHz; switchable IF filter bandwidth; field-programmable synthesized audio subcarrier demodulators; low power consumption; L.O. Stability: 0.002% at 2 GHz; audible RCL tone aids in antenna alignment; switchable de-emphasis; video invert switch

Type of Microwave Equipment: Central ENG Receiver

Manufacturer	Model	Key Features
California Microwave / Microwave Radio Communications	MCR	Superheterodyne, dual conversion type receiver; remote control capability, low noise pre-amplifier standard, selectable IF bandwidths; optional SAW IF filter; filtered and composite video outputs, 70 MHz IF output; 2 audio channels standard; 4 audios optional
Nucomm	CR6	Agile tuning with full function remote control interface; Includes LNA, LNB, bandpass filter; Currently under development.
Continental Microwave / RF Technology	UCL Series CR	Dual terminal in 2 RU x 19 inch shelf; RS422 interface for remote tuning / control / monitoring; Digital or analog video modulation; Frequency range: 1.7 to 3.5 GHz; Input: 70 MHz IF signal

		Dual Upconversion; RF output: 3 Watt typical; RF channels: Field selectable channels in 100 KHz steps across 500 MHz; Options: Digital Modulator

Type of Digital Equipment: IRD

Manufacturer	Model	Key Features
Tiernan	TDR600	L-band input: 950 – 2150 MHz; Input power level –25 dBm to –65 dBm; DVB-compliant QPSK signal at variable rates up to 30 MSPS; DVB-compliant FEC decoding, de-interleaving, descrambling; Video processing: MPEG-2 4:2:0 MP@ML & 4:2:2 SP@ML; Video output: Composite analog NTSC/PAL, Serial digital component video (D1); Audio processing: MPEG-2 layer I and II audio; Audio output: Two balanced analog stereo pairs, Two AES / EBU digital stereo pairs; Data output: Two data outputs independently configurable, up to 4.096 Mbps (synchronous), 34.8 kbps (asynchronous) max.
Tiernan	TDR7/S	L-band input: 950 – 2050 MHz; Input power level –35 dBm to –75 dBm; Variable QPSK signal rate up to 60 Mbps; DVB-compliant FEC decoding, de-interleaving, descrambling; Video processing: MPEG-2 MP@ML, compressed video rates from 1 Mbps to 15 Mbps; Video output: Composite analog NTSC/PAL; Audio processing: MPEG-2 layer I or II audio; Audio output: Two analog stereo pair or four independent mono channels; Data output: Two data outputs, up to 4.096 Mbps (synchronous), 34.8 kbps (asynchronous) max.
Wegener	DVR2000 / DVR2001	L-band input: 950 – 2050 MHz; Input power level: -35 to –65 dBm; DVB-compliant QPSK signal; DVB-compliant FEC decoding, de-interleaving, descrambling, and Eb/No performance; Video Processing: MPEG-2 MP@ML; Video output: Composite analog NTSC/PAL, S-Video, Serial digital component video (D1), supports 2.5 – 45 Mbps digital video in SCPC and MCPC modes; Audio processing: MPEG-2 layer I and II audio; Audio output: Two

		balanced analog stereo pairs, Two AES / EBU digital stereo pairs
NDS	DSNG	L-band input; DVB-compliant QPSK signal; Video processing: MPEG-2 main profile @ main level and studio profile @ main level switchable; Video output: Composite analog NTSC/PAL, Serial digital component video (D1); Audio processing: MPEG-2 layer I and II audio; Audio output: Two balanced analog stereo pairs, Two AES / EBU digital stereo pairs; 8-PSK demodulation optional
Scientific Atlanta	PowerVu D9223	L-band input: 950 – 2050 MHz; Input power level: -30 dBm to –65 dBm; DVB-compliant QPSK signal; Video processing: MPEG-2 MP@ML; Video output: Composite analog NTSC/PAL; Audio processing: MPEG-2 layer I and II audio; Audio output: Two stereo pairs or four mono channels; Symbol rate range: 3 to 30.8 MSPS; Options: Audio: Additional two stereo pairs or four mono channels, digital audio output (AES/EBU); Video: Serial digital component video output (D1); Data output: 9.6 kbps to 2 Mbps via RS422
General Instruments (previously NextLevel)	DSR-4000	L-band input: 950 – 1550 MHz (2150 MHz optional); Input power level: -25 dBm to –65 dBm; Symbol rates: 3.25 to 29.3 MSPS; Supports 4 to 36 MHz bandwidths; Video processing: MPEG-2 MP@ML; Video output: Composite analog NTSC/PAL; Audio processing: MPEG-2 layer I and II audio, Dolby AC-3; Audio output: Two balanced analog stereo pairs; Data output: 9 Mbps high speed channel
Tadiran Scopus	CODICO 250	L-band input: 950 – 2150 MHz; Input power level: -25 dBm to –65 dBm; QPSK modulation; Video processing: MPEG-2 MP@ML; Video output: Composite analog NTSC/PAL, Serial digital component video (D1); Audio processing: MPEG-2 layer I and II audio; Audio output: One stereo pair or dual mono channels; Data output: Up to 38.4 kbps low speed data rate, Up to 8 mbps high speed data rate; Symbol rate: 2 to 30 Msps Viterbi decoding rates: ½, 2/3, ¾, 4/5, 5/6, 7/8, 8/9; Reed Solomon (204, 188, 8)
Thomson	DBD2421	L-band input: 950 – 2150 MHz; QPSK

		modulation; Video processing: MPEG-2 MP@ML; Video output: Composite analog NTSC/PAL, Serial digital component video (D1); Audio processing: MPEG-2 layer I and II audio; Audio output: Two stereo pairs, up to four channels; Data output: One channel at 76,800 baud (RS-422); Useful bit rate: 1.5 to 46 Mbps; Bandwidth: 2 to 18 MHz – 27 or 36 MHz; Inner FEC Convolution Code Rates: ½ – 7/8, Reed Solomon (204, 188, 8)
Thomson	MSU4422	Similar to DBD2421; Also includes MPEG-2 4:2:2 SP @ ML video processing
Philips	IRD	L-band Input: 950 – 2150 MHz; QPSK Modulation; SCPC symbol rate: 4 – 8 Mbaud; MCPC symbol rate: 15 – 30 Mbaud; Video processing: MPEG-2 MP@ML; Video output: Composite analog NTSC/PAL; Video decoder bit rate: 2 – 15 Mbps; Audio rocessing: MPEG-2 layer I and II audio; Audio output: One analog stereo pair, One AES / EBU digital stereo pair; Audio decoder bit rate: 32 – 384 kbps; Viterbi decoding rates: ½, 2/3, ¾, 5/6, 7/8; Reed Solomon (204, 188, 8)
Sony	SX	This integrated receiver unit will only interface with the accompanying Sony SX transmit equipment; "Contribution picture quality" MPEG-2 SP@ML; 2 X real-time transmission; 2 channel transmission; 2 component video codec available; Encoders and decoders addressable

Type of Digital Equipment: Demodulator

Manufacturer	Model	Key Features
EF Data	SDM2020	Transmission rate: 1 to 100 Mbps; Symbol rate: 1 to 37.5 MSPS; DVB QPSK modulation; Viterbi (K=7) FEC rates at ½, 2/3, 5/6, ¾, and 7/8; Reed-Solomon Outer Coding (204, 188, T=8); Interface: RS-422, PECL, ECL, DVB-LVDS, and ASI; IF Range: 50 – 180 MHz; Output power: -20 to +5 dBm; Options: 8 PSK, 5/6 and 2/3
Newtec	NTC/2060/ AA	SCPC symbol rate: 1.5 to 10.5 MSPS; DVB compliant QPSK modulation; FEC rates at 1/2,

		2/3, 5/6, 3/4, and 7/8; Reed-Solomon Outer Coding; Options: 8-PSK,FEC rates at 2/3, 5/6, and 8/9
California Microwave / MRC	FS8-D	4-FSK demodulator; 8 Mbps fixed data rate; works with MRC's existing MCR central receiver and TBR-2 receiver; available in approx. 3 months

Type of Digital Equipment: Decoder

Manufacturer	Model	Key Features
Tadiran Scopus	CODICO CG-241	Video processing: MPEG-2 MP@ML, up to 15 Mbps; Video output: Composite analog NTSC/PAL on BNC connector, Serial digital component video (D1) on a BNC connector; Audio processing: MPEG-2 layer I and II audio; Audio output: Two balanced analog stereo pairs - DB-9 connectors (male), Two AES / EBU digital stereo pairs - DB-9 connectors (male); Data output: Two data outputs independently configurable, up to 2.048 Mbps RS-422 synchronous data - DB-15 HD connector; Symbol rate: 2 - 30 Msps; Viterbi decoding rates: 1/2, 2/3, 3/4, 4/5, 5/6, 7/8, 8/9; Reed Solomon (204, 188, 8)
Thomson	Digithom 8523	ETSI decoder; Input data rates: 8.448, 16.896, 22.912, 34.368, or 44.736 Mbps (G.703); Video output: Composite analog NTSC/PAL on BNC connector, Serial digital component video (D1) on a BNC connector; Audio processing: MPEG-2 layer I and II audio; Audio output: Two balanced analog stereo pairs - DB-9 connectors (male), Two AES / EBU digital stereo pairs - DB-9 connectors (male)
Leitch	-	Video processing: MPEG-2 MP@ML, up to 15 Mbps; Video output: Composite analog NTSC/PAL on BNC connector, Serial digital component video (D1) on a BNC connector; Audio processing: MPEG-2 layer I and II audio; Audio output: Two balanced analog stereo pairs - DB-9 connectors (male), Two AES / EBU digital stereo pairs - DB-9 connectors (male); Data output: 2 data outputs independently configurable,

		up to 2.048 Mbps RS-422 synchronous data - DB-15 HD connector; Symbol rate: 2 - 30 MSPS; Viterbi decoding rates: 1/2, 2/3, 3/4, 4/5, 5/6, 7/8, 8/9; Reed Solomon (204, 188, 8)

COMSAT CORPORATION

Bruce A. Henoch
General Attorney

6560 Rock Spring Drive
Bethesda, MD 20817
Telephone 301 214 3347
Fax 301 214 7145
Telex 197800
Internet bruce.henoch@comsat.com

March 18, 1998

Ms. Magalie Salas, Secretary
Federal Communications Commission
1919 M Street, N.W., Room 222
Washington, D.C. 20554

Re: EX PARTE
ET Docket 95-18
RM - 7927
PP - 28
In the Matter of Amendment of Section 2.106 of the Commission's Rules to Allocate Spectrum at 2 GHz for Use by the Mobile-Satellite Service

Dear Ms. Salas:

COMSAT Corporation is filing this letter to apprise the Commission of the results of important tests conducted recently at COMSAT Laboratories that confirm the positions advanced by the MSS Coalition in its Petition for Partial Reconsideration, filed last year in the above-referenced proceeding.[1] The test program carried out at COMSAT Laboratories [2] clearly demonstrate that currently available "off-the-shelf" digital satellite news gathering ("SNG") compression and transmission equipment can be used as a replacement for conventional FM equipment for terrestrial Broadcast Auxiliary Service/Electronic News Gathering ("BAS/ENG") applications.

These tests are extremely important to this proceeding, because they show that, using readily-available, "off-the-shelf" digital equipment, ENG channel bandwidth can easily be reduced by a factor of two (or more) as compared to today's 17 MHz per channel--with picture quality, stability and robustness markedly superior to that provided by conventional FM ENG equipment Consequently, the results of these tests show that when the Commission rechannelizes the BAS 2 GHz spectrum from 120 MHz to as few as 70 MHz, the reduced BAS allocation can still provide broadcasters with at least seven high-quality ENG channels in the band using digital equipment

The tests performed at the COMSAT Laboratories were successful, via use of a wide band multipath emulator, in replicating the results of the audio-visual quality and signal robustness tests performed in New York City. The emulator was used to reproduce, under controlled conditions of the laboratory, the same three transmission conditions as found in the field tests in NYC. In

[1] *Petition for Partial Reconsideration of the MSS Coalition*, ET Docket No. 95-18 (filed May 20, 1997), pp. 9-24

[2] *These tests reproduced the propagation conditions of field trials conducted earlier, in New York City, and confirmed the results of these tests. See Letter from Dr. John B. Payne, President, Nucomm, Inc., to Magalie Roman Salas, Secretary, FCC*, ET Docket No. 95-18 (filed Feb. 11, 1998).

addition, in a second series of tests, bit error rates of digital transmissions through the emulator were measured using the same three digital modulation techniques used in the compressed video transmission tests.

The results of the COMSAT Labs tests confirmed the data obtained in earlier field tests conducted in New York City. Our test results showed that MPEG-2 compressed digital video transmitted over a microwave carrier with QPSK modulation (either 9 Mbit/s with rate 3/4 FEC; or, 10.5 Mbit/s with rate 7/8 FEC) is a highly robust TV transmission system, producing an extremely clear and stable TV picture, even in the face of the most severe multipath propagation conditions likely to be encountered in the BAS/ENG high-rise, urban environments. Such a transmission format occupies a bandwidth/channel of only 8.5 MHz, or half that of the current BAS/ENG analog FM-TV 17 MHz channel.

Furthermore, bit error rate ("BER") measurements -- which were not made in the NYC field tests -- showed that the QPSK modulation at a bit rate of 9 Mbit/s with rate 3/4 FEC (or 10.5 Mbit/s with rate 7/8 FEC) can withstand even the most extreme multipath situation (representing multiple "building bounces" in actual field conditions), since the average BER was less than 10^{-10} (1 error in 10,000,000,000 bits) for both 3/4 FEC and 7/8 FEC (the latter with a 17% higher bit rate). Generally speaking, a BER of only 10^{-6} (1 error in 1,000,000 bits) is considered adequate link quality for transmission of MPEG-2 compressed video without degradation or artifacts. The higher-order modulation formats of 8-PSK and 16-QAM were also subjected to the same propagation conditions as QPSK. Although these formats fared well in moderate multipath, they were found to be not nearly as robust as QPSK under the worst-case, extreme multipath conditions -- for similar FEC code rates.

Attached please find a detailed description of the tests and the measurement results obtained by COMSAT Laboratories. As we note in this report, pursuant to the rules governing Ex Parte submissions in the instant 2 GHz proceeding, COMSAT will make available to the Commission upon request--for viewing by its experts--the analog FM and compressed digital video tapes recorded during our recent experiments. Any inquiries concerning the report and related matters should be addressed to Jeff Binckes at (301) 214-3263.

Yours truly,

Bruce A. Henoch
General Attorney

Enclosure

cc: Richard Smith, Bruce Franca, Roy Stewart, Regina Keeney, Robert Calaff, Rebecca Arbogast, Steve Sharkey, Sean White

Digital ENG Tests using Noisecom Microwave Emulator Performed by COMSAT Laboratories, Clarksburg, Maryland

I. Introduction

COMSAT Laboratories, a business unit of COMSAT Corporation, recently conducted laboratory tests of digital (compressed) video coupled with digital transmission techniques under propagation conditions closely representing those encountered by electronic news gathering ("ENG") links in the Broadcast Auxiliary Service ("BAS"), operating in a built-up urban environment. The main purpose of these tests was to assess and confirm the technical feasibility of using commercially available "off-the-shelf" digital satellite news gathering ("SNG") television transmission equipment as a candidate to replace conventional FM-TV for terrestrial BAS/ ENG applications. The second purpose of the test was to attempt to replicate the test conditions and results obtained by Nucomm, Inc., a manufacturer of microwave equipment, in a series of field tests conducted recently in New York City.[1]

These tests are of crucial importance to the both the MSS and broadcast industries because of recent actions by both the Commission and Congress that may result in a reduction in the amount of spectrum allocated for BAS in the 2 GHz band from 120 MHz to as few as 70 MHz. The primary conclusion obtained from these tests is that readily-available digital compression and transmission equipment has the capability of reducing ENG bandwidth needs by a factor of two (or more) while still providing improved picture quality, stability, and robustness relative to conventional FM equipment. These tests thus confirm that, using existing technology, BAS operations can be fully accommodated in an allocation of 70 MHz, and picture quality, stability, and robustness will actually be superior to that obtained today using conventional FM equipment.

II. Test Procedures

These tests were undertaken by COMSAT Laboratories in an effort to reproduce and confirm the positive results of field tests of digital ENG equipment that were conducted in New York City, in 1997, as described in an ex parte submission to the Commission. These field tests were conducted in New York City in cooperation with FOX station WNYW-TV and were carried out using a WNYW ENG truck and the station's Empire State Building Central Receive site, plus studio recording equipment and Wegener DV2000 series digital video coder/ transmitter and Integrated Receiver Decoder ("IRD") equipment. The NYC field tests were conducted under three different RF paths and associated transmission conditions: 1) direct line-of-sight transmission path, with no multipath; 2) RF path with moderate multipath, in which TV signals were bounced off buildings to complete the link; and 3) RF path with extreme multipath in which the

---

[1] *See, Letter from Dr. John B. Payne, President, Nucomm, Inc., to Magalie Roman Salas, Secretary, FCC.* ET Docket No. 95-18 (filed Feb. 11, 1998).

transmit and receive antennas were intentionally misaligned to induce multiple building bounces and severe reflections (very heavy multipath).

At COMSAT Laboratories, the compressed and modulated digital video signalwas subjected to RF multipath effects, using the Noisecom MP2600 Wideband Multipath Fading Emulator acquired by the Labs in late 1997. This unit is a highly sophisticated, programmable multipath emulator, capable of handling RF signal bandwidths up to 28 MHz and a choice of Rayleigh, Rician, log-normal, Nakagami and Suzuki fading (amplitude envelope statistics) for each reflected path. This emulator was used to replicate, under controlled conditions of the laboratory, the same three transmission conditions as field tested in NYC. Specifically, in the first series of tests the audio visual quality of a 17 MHz analog FM signal was compared with the quality of a MPEG-2 digitally compressed audio and video signal occupying bandwidths smaller than that of the modulated FM-TV carrier, at bit rates ranging from 4.5 to 15 Mbps. Each of the compressed video transmissions employed digital modulation and forward error correction ("FEC") coding at selected rates for each of the particular transmission (bit) rates used.

In the second series of tests, bit error rates ("BER") of digital transmissions through the multipath emulator were measured using the same three digital modulation and FEC coding techniques as used for the audio-video comparison tests: 1) QPSK; 2) 8-PSK; and 3) 16-QAM modulation. A pseudo-random signal generator was used as the source rather than the MPEG-2 compressed digital video output data . After the pseudo-random bit stream was modulated and FEC coded, the signal was then transmitted over the three simulated RF transmission. The BER test set (Fireberd 6000A) then compared the receive digital bit stream with the transmit digital bit stream and calculated the uncorrected bit errors and the average BER.

III. Test Set-Up and Equipment

A. Multipath Emulator

The Noisecom MP2600 Wideband Multipath Fading Emulator can simulate one or two wireless communication channels that propagate over as many as 12 simulated signal paths, in which each path can be programmed with unique Doppler shift, spectral distribution, attenuation, and delay parameters. The Noisecom emulator was programmed to emulate the three multipath conditions encountered in the NYC ENG field tests, specifically: (1) direct line-of-sight transmission from ENG truck to receive site, (2) moderate multipath transmission, and (3) extreme multipath transmission.[2]

---

[2] For the NYC field tests, Test Case 1 was a direct line-of-sight transmission, the "best-case" condition that resulted in a transmitted analog FM signal that produced good pictures, although there were some noticeable ghosting artifacts. Test Case 2, a moderate multipath transmission, is representative of typical ENG operating conditions in major cities where buildings are commonplace obstructions to obtaining direct line-of-sight

Appendix A contains a set of three tables giving the specific parameters used by COMSAT Labs to simulate as closely as possible each of these multipath conditions tested in the NYC field tests. These parameters were determined heuristically by adjusting the Noisecomm emulator programmable settings so as to produce ghosting and distortion of the FM-TV signal (through each of the three RF paths) until the video quality closely matched the effects seen on video tapes of the three cases in the NYC field tests.

B. Digital Codec and Modems

The digital codecs and modems used in the digital ENG lab tests were similar to the ones used in the digital ENG field tests in New York City. The baseline digital audio and video transmission system was the Wegener DV2000 series MPEG-2 digital video transmitter and IRD. The transmit/coder equipment was the DVT2000, which is a DVB compliant MPEG-2 4:2:0 encoder and QPSK modulator. Program video was digitized, 4:2:0 encoded, and multiplexed with encoded audio into a MPEG-2 transport stream at variable data rates from 2 to 15 Mbps. The data was then FEC coded using DVB-compatible concatenated coding (Convolutional inner code, Reed-Solomon outer code), then modulated by a variable rate QPSK modulator and output as a 70 MHz IF signal. The receive equipment used was the Wegener DVR2000 IRD, which is an integrated L-band (950 - 2050 MHz) receiver and decoder ("IRD unit"). Both the DVT2000 and DVR2000 equipment are currently used by TBS and NBC for digital SNG transmissions and video backhaul applications.

To test performance of higher order digital modulation for digital ENG, an external modem, the EF Data Systems SDM-8000 satellite modem, was used. This is because the Wegener digital codec contained only a QPSK modem. The SDM-8000 is a full-duplex modem supporting the following modulation modes: BPSK, QPSK, 8-PSK, and 16-QAM modulation types. Each mode can operate at several selected FEC rates and data rates up to approximately 9 Mbps (various bit rates actually tested). The supported FEC rates are 2/3 for 8-PSK modulation, 3/4 and 7/8 for 16-QAM.

---

transmission. In Case 2, the antenna on the ENG truck was moved to 45 degrees off of true North so that at least one building bounce was introduced in the path. Although the resulting analog FM transmitted signal showed noticeable ghosting artifacts and color shifting, the quality was considered a borderline usable picture for broadcasting. Test Case 3 tested extreme multipath interference including fading of some reflected signals. Both the antennas on the ENG truck and the receive site were intentionally misaligned so as to maximize interference along the signal transmission path, including multiple reflections and scattering from buildings and possibly even moving vehicles. Significant ghosting and color distortions were visible, and the audio had severe breakup; the resulting analog signal quality was considered too poor to broadcast.

IV. FIRST TEST SEQUENCE: Video Quality Tests

The video quality tests compared the audio-visual quality of the analog FM signal with the quality of a digital compressed signal under similar multipath conditions encountered in the NYC field tests. Specifically, COMSAT Labs compared the quality of an analog FM signal at an allocated bandwidth of 17 MHz with an MPEG-2 digitally compressed signal at allocated bandwidths of 4.2 to 12 MHz. Since multipath transmission, especially bouncing off buildings, is common in urban ENG field operations, the Noisecom multipath emulator was the key element of equipment in the test set-up to assess the impact of various degrees of multipath on the video quality in each of the analog and digital transmission configurations. Two types of video source material were used: the first was a fast action clip from a commercial motion picture on laser disk; and the second was a high motion, high color contrast video sequence from a pre-recorded basketball game on D-2 tape.

Figure 1 shows the video test set-up configuration for analog FM transmission. The analog FM was set at 10 MHz peak-to-peak deviation for a 17 MHz allocated bandwidth.

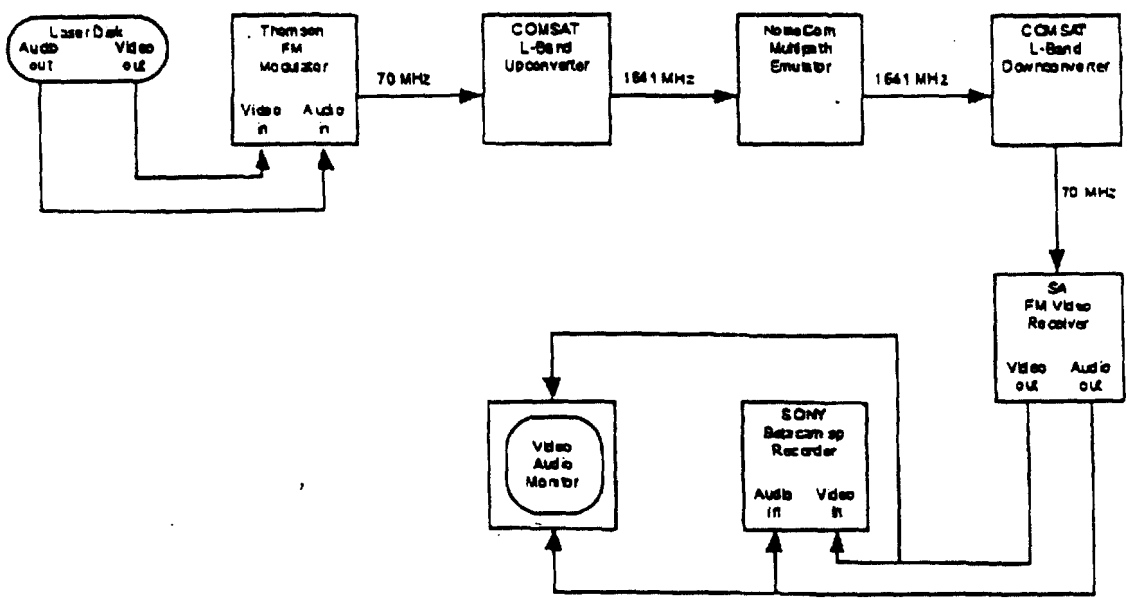

Figure 1: Analog FM Video Test Set-Up

Figure 2 shows the video test set-up configuration for digital QPSK transmission. The digital video transmission system tested data rates ranging from 4.5 to 15 Mbps using the Wegener DVT2000 encoder/transmitter. The transport bitstream was encoded at FEC rates of 1/2, 2/3, 3/4, and 7/8 and modulated using the DVT2000 internal QPSK modulator.

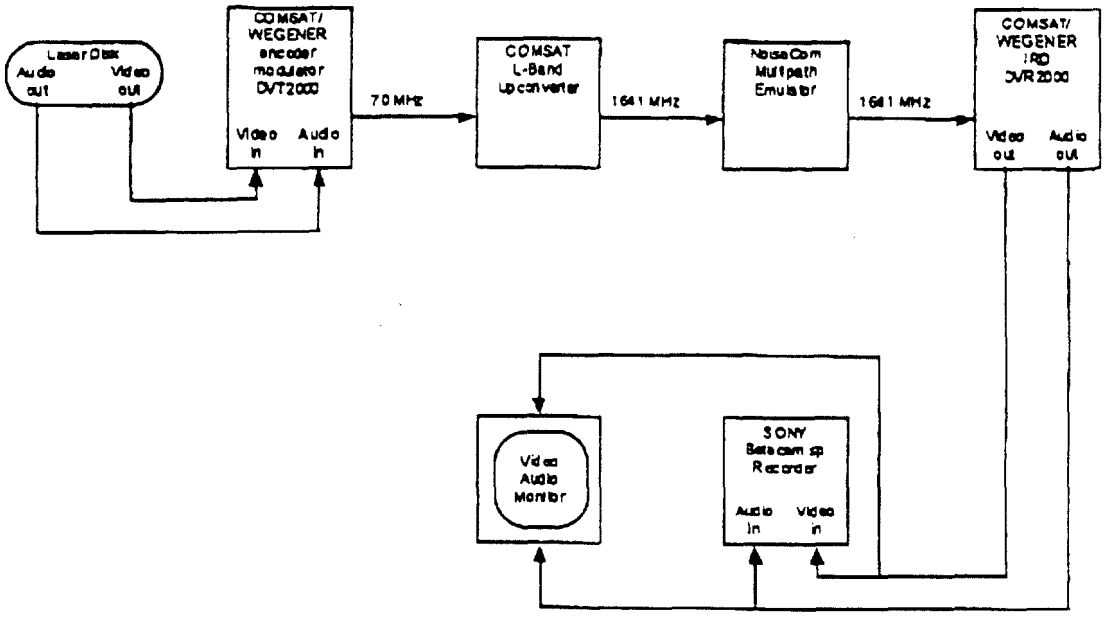

Figure 2: Digital Video Test Set-Up QPSK

Figure 3 shows the video test set-up configuration for digital 8-PSK and 16-QAM transmission. In this test set-up, the internal QPSK modulator in the DVT2000 was bypassed in order to make use of the (external) 8-PSK and 16-QAM modulators in the SDM-8000 modem. The MPEG-2 transport stream output from the DVT2000 interfaced to the SDM-8000 modem via RS-422. Due to the data rate and FEC rate limitations of the SDM-8000 modem, COMSAT Labs was constrained to the testing of the digital combinations of 6 and 7.5 Mbps, 2/3 FEC with Reed-Solomon using 8-PSK modulation, and 6 and 7.5 Mbps, 3/4 FEC with Reed-Solomon using 16-QAM modulation.

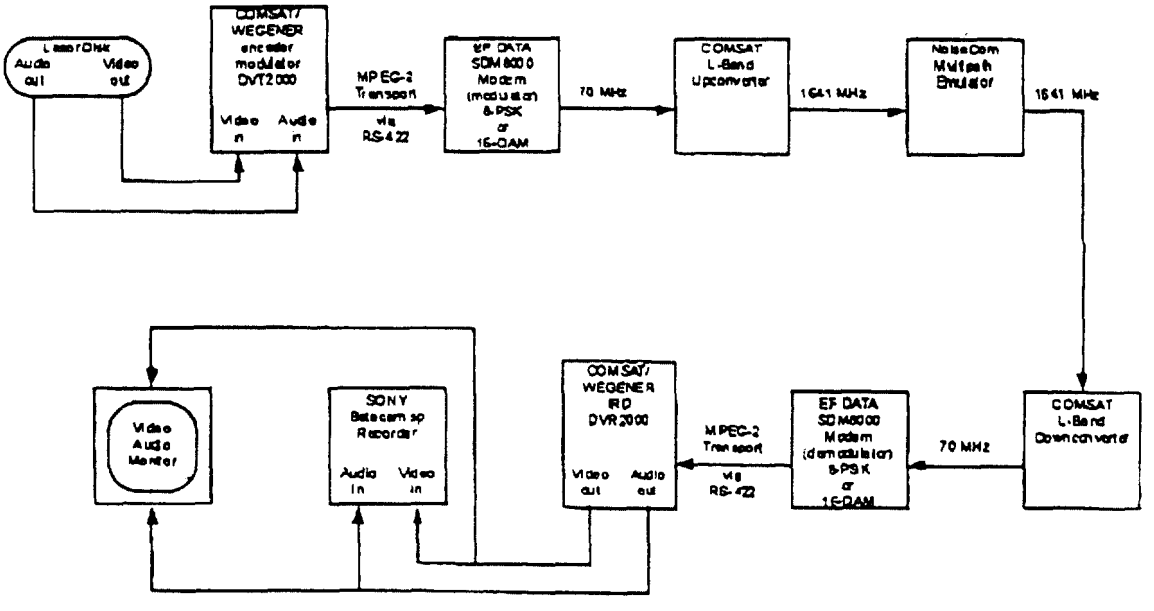

Figure 3: Digital Video Test Set-Up 8-PSK and 16-QAM

Appendix B lists all the tested digital combinations of modulation mode, transmission bit rate, FEC code rate, and nominal channel bandwidth. The resulting audio and video from the analog and digital tests was recorded onto Beta SP tape and is available for inspection.

Conclusions of First Test Sequence

- Subjective viewing of the resulting analog and digital video sequences on Beta SP tape showed that for movie material, such as an adventure-action film, the video quality starting at the lowest tested digital bit rate of 4.5 Mbps is comparable to the video quality transmitted using analog FM-TV for the "best-case" scenario of direct line-of-sight transmission, as had been carried out in the NYC field test, Test Case 1.

- For high-motion sports video material (basketball game), the minimum required data rate is approximately twice the encoding rate for movie material. Approximately 9 Mbps data rate is required to encode the 'basketball' sequence to achieve comparable video quality to the "best-case" (NYC field tests-Test Case 1) analog FM-TV case.

- In the moderate and extreme multipath cases (NYC field tests-Test Cases 2 and 3), there were visible distortions in the analog FM signal. The transmitted analog video had significant ghosting and chroma distortions; whereas, the digital signal maintained its integrity so long as there was sufficient E_b/N_o, FEC error protection and correction.

V. SECOND TEST SEQUENCE: Bit Error Rate (BER) Tests

The bit error rate performance was measured for each of the three digital modulation techniques (QPSK, 8-PSK, and 16-QAM) at selected FEC rates, all in conjunction with Reed-Solomon outer coding. The performance measurements were recorded with the Noisecom emulator added between the transmit and receive IF input and output of the SDM-8000 modem as shown in Figure 4. The measurements were the uncorrected bit errors and BER of the modem, over ~30 minute runs. The Fireberd BER Test Set generated a continuous pseudo random digital bit stream that was transmitted over the simulated RF path. It then compared the receive digital bit stream with the transmit digital bit stream and calculated the uncorrected bit error count and average BER for each test case.

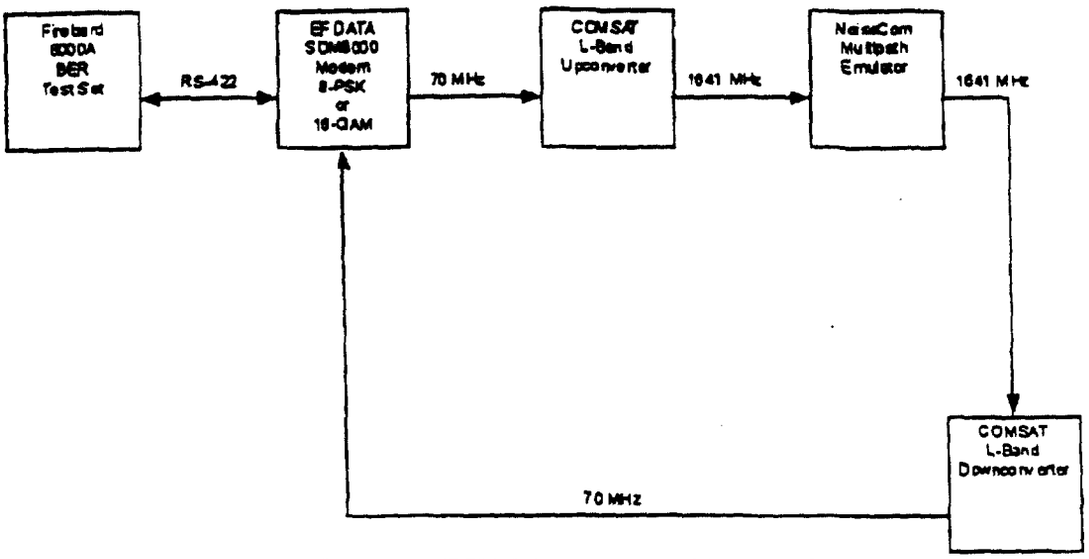

Figure 4: BER Measurement Test Set-Up

Table 1 below shows the BER measurements for the different coding configurations under each of the three NYC field test conditions (NYC field tests-Test Cases 1, 2, & 3).

Modulation	FEC	Case	Bit Error Count	Avg. BER
QPSK	¾	1	0	0 E -10
		2	0	0 E -10
		3	0	0 E -10
QPSK	7/8	1	0	0 E -10
		2	0	0 E -10
		3	0	0 E -10
8-PSK	2/3	1	0	0 E -10
		2	0	0 E -10
		3	6.5 E +8	4.7 E -2
16-QAM	3/4	1	0	0 E -10
		2	0	0 E -10
		3	5.4 E +9	4.05 E -1

Table 1: BER Measurements

Conclusions of Second Test Sequence

- As expected, QPSK is more robust than the higher order 8-PSK and 16-QAM digital modulations techniques for digital ENG. Even in the most extreme multipath case (NYC field test-Test Case 3), the average BER was 10^{-10} for QPSK modulation with

both 3/4 and 7/8 FEC rates, as compared to a substantially worse average BER of 4.7 x 10^{-2} for 8-PSK with 2/3 FEC and a BER of 4.05 x 10^{-1} for 16-QAM with 3/4 FEC.

- Note however that all three digital modulation techniques maintained an average BER of 10^{-10} in the moderate multipath condition (NYC field test- Test Case 2). Since this multipath condition is more representative of an actual ENG multipath transmission environment than the extreme multipath scenario (NYC field test-Test Case 3), higher order modulation schemes such as 8-PSK and 16-QAM might still be considered viable options for digital ENG -- the advantage being higher bandwidth efficiency.

- Actual BER performance on the simulated microwave links will vary slightly, depending on modem manufacturer. It should be noted that the EF Data Systems SDM-8000 modem is a somewhat higher-performance modem than the internal QPSK modulator included internally in the DVT2000 coder/transmitter and the corresponding QPSK demodulator included in the DVR2000 IRD unit.

VI. Overall Conclusions of COMSAT LAB's Measurement Program

COMSAT Laboratories conducted digital ENG lab tests in order to evaluate to the digital ENG field tests conducted in September 1997 in New York City. COMSAT's purpose was to conduct video-audio quality and signal robustness tests in the presence of different multipath environments using the Noisecom multipath emulator to simulate the same three test conditions present in the NYC field tests. The following two test sequences were conducted: 1) audio visual quality comparison of a 17 MHz analog FM-TV signal to a digitally compressed MPEG-2 video at bit rates ranging from 4.5 to 15 Mbps, with selected Forward Error Correction (FEC) coding rates and three different digital modulation types: QPSK, 8-PSK, and 16-QAM ; and, 2) link robustness tests, consisting of bit error rate (BER) measurements using the Fireberd BER Test Set and the EF Data Systems SDM-8000 modem with QPSK, 8-PSK, and 16-QAM.

The test results show that it is technically feasible to use digital equipment such as the DV2000 series MPEG-2 digital video transmitter and IRD with either internal QPSK modem or external SDM-8000 modem—equipment currently used for digital SNG applications--for digital ENG transmission as well. An 8.5 MHz to 10 MHz ENG channel spacing in an overall BAS spectrum allocation of 70 MHz or less is quite feasible using readily available, "off-the-shelf" digital equipment. For example, a 10 MHz channel spacing provides ample bandwidth and guard band in which numerous configurations of transmission bit rate and FEC code rate can be applied. Depending on the specific requirements of the TV station, it can be configured with standard MPEG-2 main level, main profile codecs and QPSK modulators or can be configured with higher bit rate codecs and higher order digital modulation schemes. However, nominally, a digital channel configured with an MPEG-2 compressed 9 Mbps data rate, 3/4 FEC with Reed-Solomon outer coding, and QPSK modulation appears to be the best digital combination that provides excellent audio visual quality while ensuring sufficient robustness for the

most severe multipath conditions that would be encountered in actual ENG field operations. These tests have shown that digital signals can be very robust and can withstand significant, heavy multipath interference before the demodulator reaches the 'cliff-point' or threshold. Similar to codec equipment, modem performance varies somewhat with manufacturer. For example, the EF Data Systems SDM-8000 modem is a higher performance modem than the internal QPSK modulator in the DVT2000 codec; and, consequently has slightly better BER performance in the presence of multipath. As shown by the BER test results of the SDM-8000 modem, higher order modulation schemes; such as, 8-PSK and 16-QAM may nonetheless be viable options for digital ENG transmission.

COMSAT would like to make the analog FM and Compressed Digital Video tapes recorded during our experiments at our laboratories available to the Commission for viewing by its experts.

Appendix A: Noisecom Settings to Simulate NYC Multi-path Conditions

Table A1: Noisecom Settings for Case 1 (Direct Line-of-Sight)

Path	Fading	Loss (dB)	Delay (μsec)	Offset (deg.)
1	-	0	16.1	58.5
2	-	25	16.6	108.5
3	-	27	17.2	158.4

Analog receive signal level (prior to receiver) ~ -26 to -27 dBm
Digital receive signal level (prior to IRD) ~ -56 to -58 dBm

Table A2: Noisecom Settings for Case 2 (Moderate Multi-Path)

Path	Fading	Loss (dB)	Delay (μsec)	Offset (deg.)
1	-	0	16.6	108.5
2	-	27	17.7	28.4
3	-	28	18.3	78.3
4	-	25	18.8	128.3
5	-	25	19.97	48.2
6	-	25	20.4	98.1

analog receive signal level was ~ -46 to -47 dBm

Table A3: Noisecom Settings for Case 3 (Extreme Multi-Path)

Path	Fading	Doppler (Hz)	Loss (dB)	Delay (μsec)	Offset (deg.)
1	-	-	0	18.8	128.3
2	-	-	20	19.3	178.2
3	-	-	15	19.9	48.2
4	-	-	20	20.4	98.1
5	Log-normal	.7	16	23.9	148.1
6	Log-normal	1.0	20	26.5	18.0

In analog case, measured signal level at L-band downconverter (prior to Noisecom) is approximately equal to a signal level of -49 dBm
In digital case, measured receive signal level is still -56 to -58 dBm

Appendix B: Video Tapes

Tape #1: Simulation of NYC Digital ENG tests
Source material: Commercial action film, Track #41, 1.5 minutes, Laserdisk
Modulation: QPSK, DVT2000 coder/transmitter and DVR2000 IRD unit

Case	Mode	Bit Rate & FEC	Allocated BW	Beg. Timecode
1	Analog FM	-	17 MHz	00:00
	Digital QPSK	(9 Mbps, 3/4)	8.5 MHz	02:00
		(10.5 Mbps, 7/8)	8.5 MHz	04:00
		(12.5 Mbps, 3/4)	12 MHz	06:00
		(15 Mbps, 7/8)	12 MHz	08:00
2	Analog FM	-	17 MHz	10:00
	Digital QPSK	(9 Mbps, 3/4)	8.5 MHz	12:00
		(10.5 Mbps, 7/8)	8.5 MHz	14:00
		(12.5 Mbps, 3/4)	12 MHz	16:00
		(15 Mbps, 7/8)	12 MHz	18:00
3	Analog FM	-	17 MHz	20:00
	Digital QPSK	(9 Mbps, 3/4)	8.5 MHz	22:00
		(10.5 Mbps, 7/8)	8.5 MHz	24:00
		(12.5 Mbps, 3/4)	12 MHz	26:00
		(15 Mbps,7/8)	12 MHz	28:00

Table B1: Video Tape #1 Recordings

Tape #2: Additional Transmission rates and FEC Code Rates (Not tested in NYC)
Source material #1: Commercial action film on Laserdisk
Source material #2: Basketball on D-2
Modulation: QPSK, DVT2000 coder/transmitter and DVR2000 IRD unit

Case	Mode	Bit Rate & FEC	Allocated BW	Beg. Timecode
3	Digital QPSK	(8 Mbps, 2/3)	8.5 MHz	00:00
	(True Lies)	(6 Mbps, 1/2)	8.5 MHz	02:00
		(4.5 Mbps, 3/4)	4.2 MHz	04:00
		(4.5 Mbps, 1/2)	6.3 MHz	06:00
		(10.5 Mbps, 3/4)	10 MHz	08:00
		(9.5 Mbps, 2/3)	10 MHz	10:00
		(7 Mbps, 1/2)	10 MHz	12:00
	Basketball	(8 Mbps, 3/4)	7.5 MHz	14:00
		(9 Mbps, 3/4)	8.5 MHz	16:00
		(10.5 Mbps, 3/4)	10 MHz	18:00
		(12.5 Mbps, 3/4)	12 MHz	20:00
		(15 Mbps, 3/4)	14 MHz	22:00

Table B2: Video Tape #2 Recordings

Tape #3: Higher-Order Modulation (8-PSK & 16 QAM) Tests
Source material: Basketball on D-2
Modulation: EF Data Systems SDM8000 modem (8-PSK, 16-QAM)
Note: Reed Solomon FEC on for all cases

Case	Mode	Bit Rate & FEC	Allocated BW	Beg. Timecode
1	Analog FM	-	17 MHz	00:00
	Digital (8-PSK)	(7.5 Mbps, 2/3)	7.3 MHz	02:00
		(6 Mbps, 2/3)	5.8 MHz	04:00
	Digital (16-QAM)	(6 Mbps, 3/4)	4 MHz	06:00
		(7.5 Mbps, 3/4)	5 MHz	08:00
2	Analog FM	-	17 MHz	10:00
	Digital (8-PSK)	(7.5 Mbps, 2/3)	7.3 MHz	12:00
		(6 Mbps, 2/3)	5.8 MHz	14:00
	Digital (16-QAM)	(6 Mbps, 3/4)	4 MHz	16:00
		(7.5 Mbps, 3/4)	5 MHz	18:00
3	Analog FM	-	17 MHz	20:00
	Digital (8-PSK)	(7.5 Mbps, 2/3)	7.3 MHz	22:00
		(6 Mbps, 2/3)	5.8 MHz	24:00
	Digital (16-QAM)	(6 Mbps, 3/4)	4 MHz	26:00
		(7.5 Mbps, 3/4)	5 MHz	28:00

Table B3: Video Tape #3 Recordings

NUCOMM INC.
MICROWAVE COMMUNICATION PRODUCTS

RECEIVED

February 11, 1998

Ms. Magalie Roman Salas
Secretary
Federal Communications Commission
2000 M. Street, N.W. - Suite 480
Washington, DC 20554

Re: EX PARTE
ET Docket 95-18
RM - 7927
PP - 28

Dear Ms. Roman Salas,

As President of Nucomm, Inc., a microwave equipment manufacturer, I want to bring to your attention the results of recent laboratory and field tests conducted by Nucomm to examine the use of digital microwave technology for the broadcast industry. The study, a copy of which is attached, reviews how the digital video microwave technology can be applied to fixed point-to-point and electronic news gathering ("ENG") systems and consider the trade-offs of digital vs. analog video microwave systems.[1] We wish to submit our study to be included as part of the record in the above noted proceeding.

Recent FCC rulings on HDTV changed the microwave link requirements regarding digital video microwave for broadcast applications. The broadcast industry is increasingly interested in digital video technology as a means of enhancing existing systems and demand for digital video microwave will require the microwave manufacturer to supply new equipment components. Although a wide array of digital products such as digital cameras, editors, storage devices and encoders is available, little has been said about converting the fixed point-to-point studio-to-transmitter link ("STL"), transmitter-to-studio link ("TSL"), intercity relay ("ICR"), and ENG microwave link from analog to digital transmission, a critical part of the total production system.

Nucomm has conducted both laboratory and field test using digital video microwave systems in fixed point-to-point and ENG applications in order to inform TV station engineers about the advantages, disadvantages and trade-offs of digital vs. analog video microwave systems. These test results show that applying digital video to STL and ENG microwave systems can conserve frequency spectrum and yield superior quality and performance equal to or better than analog systems under both fading and multi-path environments.

[1] The study is also available to the public on the internet on our homepage (www.nucomm.com) in the directory Apps Notes..

No. of Copies rec'd 0+
List ABCDE

We have presented the results of our test at several industry conferences including: the Society of Broadcast Engineers ("SBE") September 26, 1997 meeting/conference in Syracuse, New York; the October 22-24, 1997 SBE conference in Seattle, Washington; and the Society of Motion Picture and Television Engineers ("SMPTE") conference in New York City on November 21-24, 1997.

We also would be happy to present our finding to you if you would find them of interest. Please feel free to call to set up an appointment if you are interested in further details regarding the study.

Sincerely,

John Payne

Dr. John B. Payne, President
Nucomm, Inc.

cc: Secretary Salas
Enclosure

NUCOMM

TOMORROW'S TECHNOLOGY TODAY

Microwave Communications Products

Digital Video Microwave Systems for STL and ENG Applications & Test Results

By Dr. John B. Payne, President
NUCOMM, Inc.
101 Bilby Rd
Hackettstown, NJ 07840
Ph. 908-852-3700, FAX 908-813-0399
e-mail: john@nucomm.com

RECEIVED
FEB 17 1998
FCC MAIL ROOM

NAB97, the FCC ruling on deadlines for HDTV and recent acts by Congress have signaled the dawn of a new era for Digital Video Microwave for broadcast applications including Fixed Point-to-Point (i.e. STL, TSL, ICRS etc.) and ENG in the United States and the world. The manufacturers of the digital CODEC, Multiplexer (MUX) and MODEM equipment have little if any knowledge of the microwave link requirements. Further more they appear to have no interest in integrating these systems. Therefore, the demand of Digital Video Microwave Fixed Point-to-Point and ENG will require the microwave manufacturer to supply part or all of a turnkey package including the transmitting/receiving equipment, CODEC, Multiplexer and MODEM components. This offers an excellent opportunity as well as a challenge for the manufacturers of Digital Microwave equipment to move into a new and expanding market area.

Because of this, it has become increasingly important for TV Station Engineers to know the advantages, disadvantages and tradeoffs of Digital vs. Analog Video Microwave Systems. The purpose of this paper is to:

- Present an overview of how the Digital Video Microwave technology will be applied to STL and ENG systems,
- Present actual laboratory and field results of tests conducted by NUCOMM using Digital Video Microwave Systems in STL and ENG applications.

Conclusions: Applying digital video to microwave systems for STL and ENG systems can conserve frequency spectrum and yield superior video and audio quality and performance equal to and better than analog systems under both fading and multi-path environments.

A - Why Digital ?

The basic answer to "WHY DIGITAL" is that transmitting in a digital format makes much more efficient use of allocated frequency spectrum. However, another advantage is that of an error-free picture under most conditions. Frequency spectrum is like land here on earth! No more is being made. Therefore, we must learn to make the best of what we have. And, what we have is in high demand.

To demonstrate how digital video microwaves can make better use of the allocated bandwidth, refer to the example in Figure 1 below. This shows the spectrum of an analog signal and that of a digital signal. The analog spectrum is for a single video and four audio FM transmitter. Its spectrum falls within a 17 MHz bandwidth such as in the 2 GHz band. All of the empty space within this band that is not occupied by the analog signal can be considered wasted spectrum.

The lower spectrum in Figure 1 is that of a transmitter being phase and amplitude modulated with a digital bit stream. It can be seen that the spectrum is better utilized. Ideally the desired shape would be a perfect rectangle. The closer the spectrum approaches the rectangular shape, the more information can be transmitted in a given bandwidth. It is the RF Digital Modulator that receives the data pulses and converts them to a 70 MHz modulated signal. The Digital Modulator and Demodulator when combined in a single unit are referred to as a MODEM. In

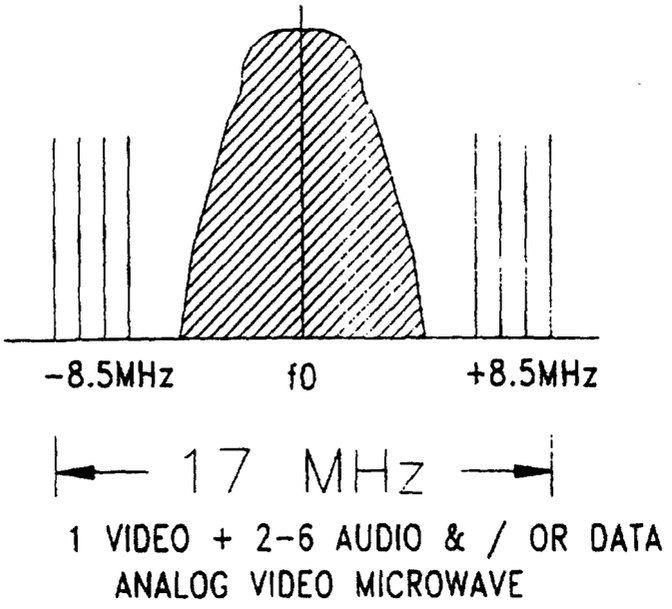

Spectrum of Analog Modulation
(A)

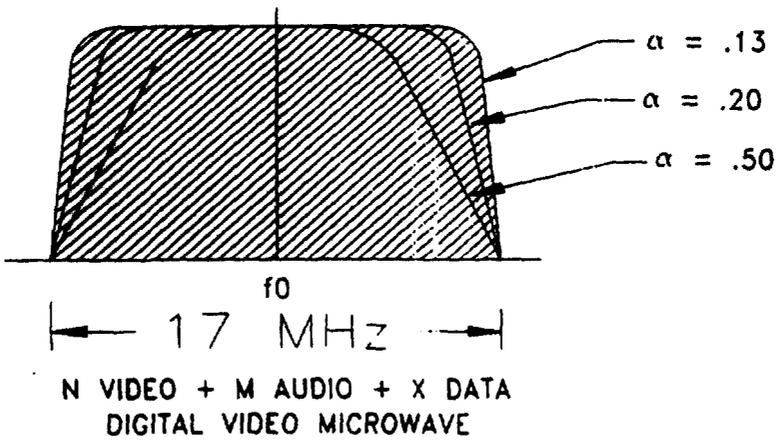

Spectrum of Digital Modulation
(B)

Spectrum of Analog and Digital Modulation
Figure 1

this paper and for terrestrial microwave we refer to them separately as Digital Modulators and Digital Demodulators since they are generally packaged separately and usually as part of the transmitter and receiver units.

To obtain the desired spectrum shape of Figure 1B, the data pulses that are inputted to the Modulator must be shaped by a low-pass-filter, referred to as a Finite Impulse Filter (FIR), to produce the desired spectrum shape. The parameter that relates the pulse shape to the spectrum shape (which is a function of occupied bandwidth) is the α parameter. The spectrum is shown for three different pulse shaping networks. When $\alpha = .13$ the spectrum is seen to be extremely efficient. Practical values for α range $.13 < \alpha < .50$ with .20 being a typical value.