EX PARTE OR LATE FILED

Frank S. Simone
Government Affairs Director

Suite 1000
1120 20th Street, N.W.
Washington, DC 20036
202 457-2321
FAX 202 457-2165
fsimone@lgamgw.attmail.com

July 16, 1998

RECEIVED

JUL 16 1998

Federal Communications Commission
Office of Secretary

Ms. Magalie Roman Salas, Secretary
Federal Communications Commission
1919 M Street, N. W. – Room 222
Washington, D. C. 20554

ORIGINAL

Re: CC Docket Nos. 98-11, 98-26, Petitions For Relief From Barriers To Deployment of Advanced Telecommunications Services; CC Docket No. 98-32, Petition To Remove Barriers To Investment In Advanced Telecommunications Services; RM No. 9244, Petition of the Alliance for Public Technology Requesting Issuance of Notice of Inquiry and Notice of Proposed Rulemaking to Implement Section 706 of the 1996 Telecommunications Act; CC Docket No. 98-91, Petition for Relief from Regulation Pursuant to Section 706 of the Telecommunications Act of 1996 and 47 U.S.C. § 160 for ADSL Infrastructure and Service; CC Docket No. 98-78, Petition of the Association for Local Telecommunications Services for a Declaratory Ruling Establishing Conditions Necessary to Promote Deployment of Advanced Telecommunications Capability Under Section 706 of the Telecommunications Act of 1996

Dear Ms. Roman Salas:

On Monday, July 15, 1998, J. Manning Lee of Teleport Communications Group, Ralph Andreotta of AT&T Corp. and the undersigned met with James Casserly, Legal Advisor to Commissioner Susan Ness. The purpose of the meeting was to discuss AT&T's written comments in the above-referenced proceedings. AT&T emphasized that the Commission simply cannot divide the network into "voice" and "data" networks: the same underlying facilities are used to provide both voice and data, and to "deregulate" one service is to deregulate both.

Two copies of this Notice are being submitted to the Secretary of the FCC in accordance with Section 1.1206(a)(2) of the Commission's rules.

Sincerely,

ATTACHMENT

cc: J. Casserly

Recycled Paper

CC Docket Nos. 98-11, 98-26, 98-32
Section 706 Proceedings

Advanced Telecommunications Incentives

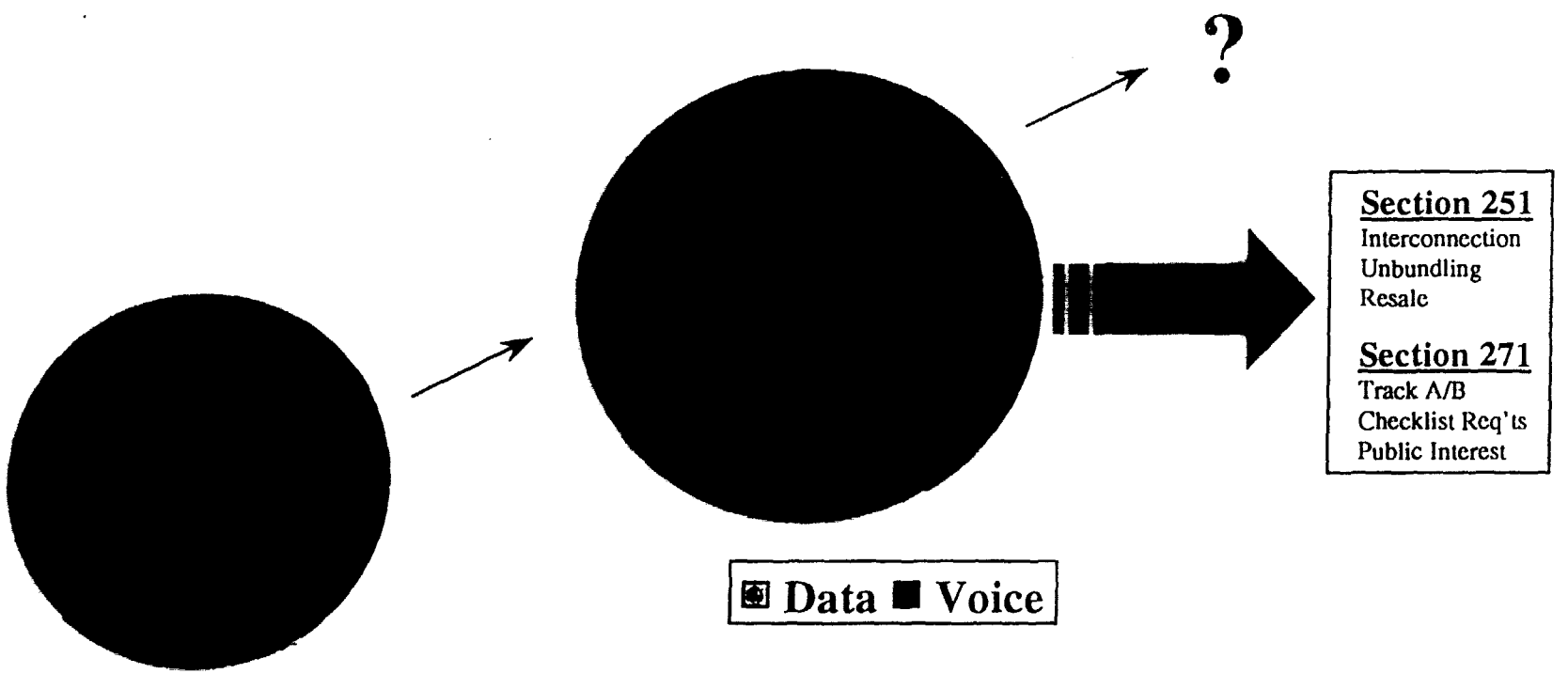

"Currently, 55 percent of our traffic is data," said Bell Atlantic Corp. Chairman Ray Smith. "In three to four years, 75 percent of our traffic will be data and 25 percent voice; it will be hard to tell one from the other when you consider voice over the internet." InternetWeek, March 2, 1998

RECEIVED
JUL 16 1998
Federal Communications Commission
Office of Secretary

Diagram 1

xDSL Loop: Copper Between Customer Premises and Central Office

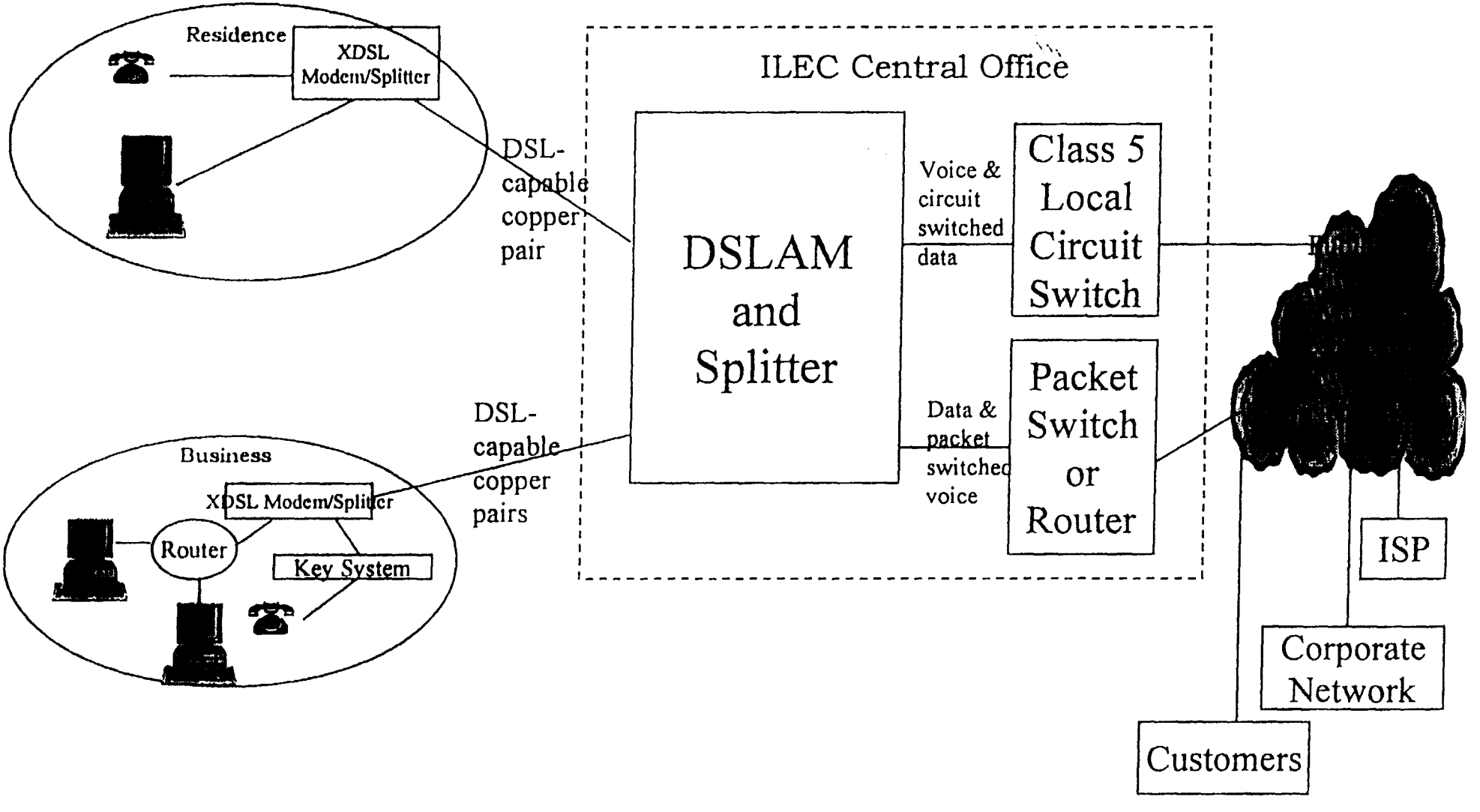

Diagram 2

xDSL Loop: Copper Between Customer Premises and Central Office

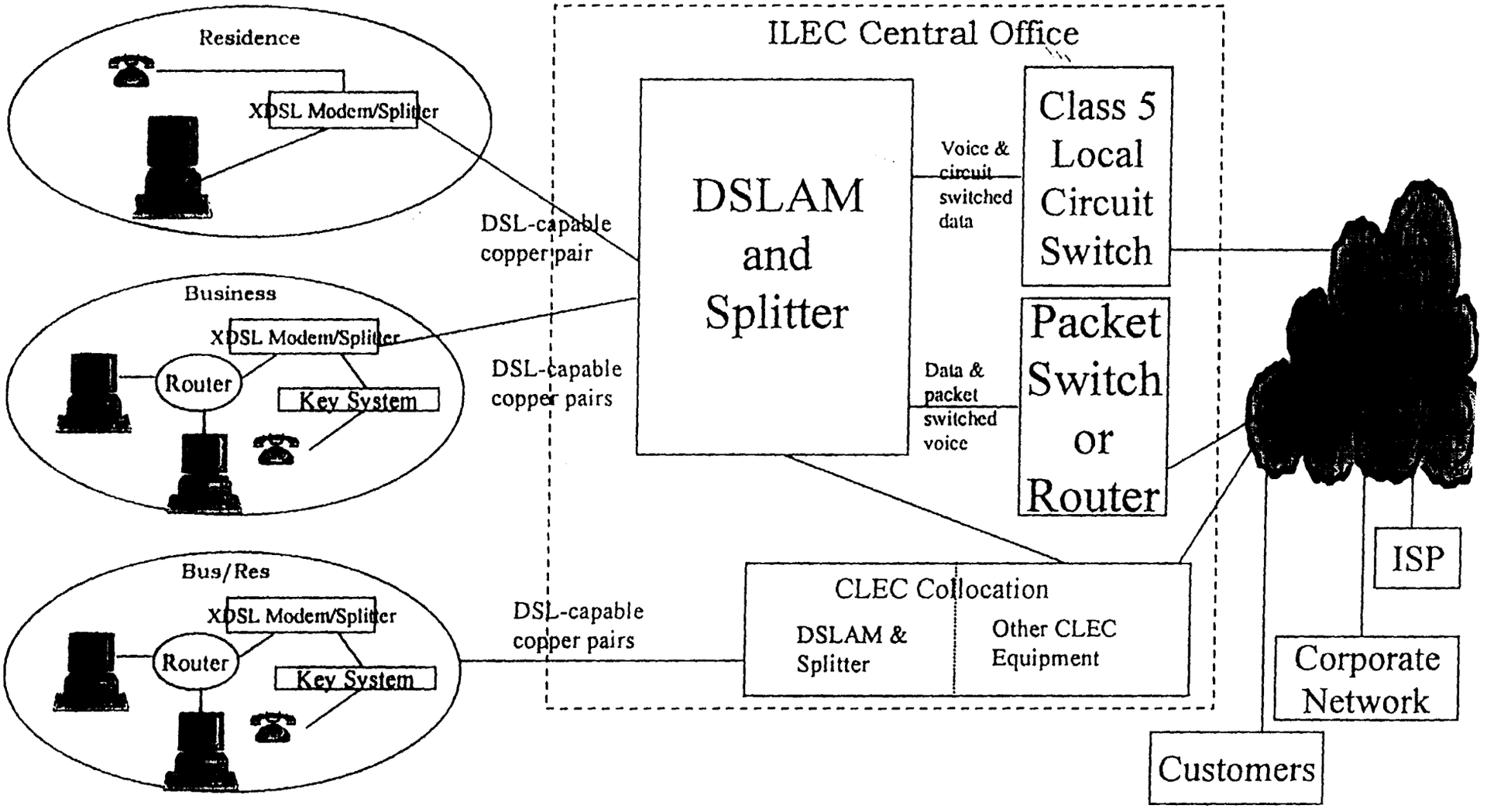

Diagram 3
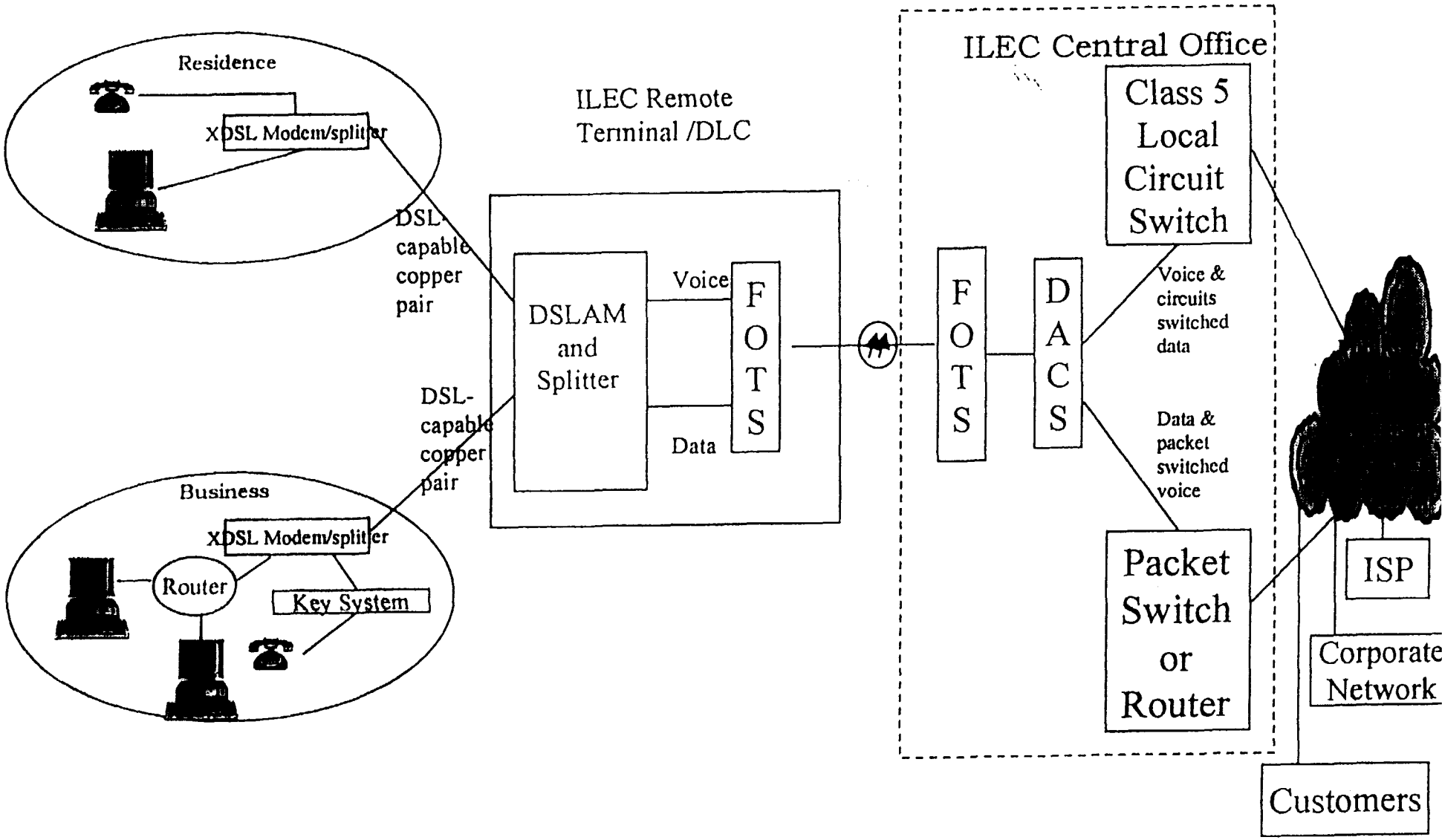
xDSL Loop: Copper Between Customer Premises and Remote Terminal/DLC
~30% of Loops Today