ORIGINAL

1120 Connecticut Avenue NW, Suite 400
Washington, D.C. 20036
(202) 776-1550
(202) 776-1555 Fax

WORLDCOM SM

EX PARTE OR LATE FILED

July 17, 1998

RECEIVED

JUL 17 1998

FEDERAL COMMUNICATIONS COMMISSION
OFFICE OF THE SECRETARY

VIA HAND DELIVERY

Ms. Magalie Roman Salas
Secretary
Federal Communications Commission
1919 M Street, N.W., Room 222
Washington, D.C. 20554

Re: Notice of Ex Parte Presentation Concerning Section 706 Petitions - CC Docket No. 98-11; CC Docket No. 98-26; CC Docket No. 98-32; CC Docket No. 98-78; CC Docket No. 98-91; CCB/CPD 98-15

Dear Ms. Salas:

Yesterday, Catherine R. Sloan, David N. Porter, and Richard S. Whitt met with Kathy Brown, Larry Strickling, Carol Mattey, and Don Stockdale of the Commission's Common Carrier Bureau, concerning issues articulated in comments filed by WorldCom, Inc. in the above-referenced proceedings. Mr. Whitt distributed a copy of the attached summary of WorldCom's views on some of the issues in those proceedings.

An original and one copy of this letter are hereby submitted to your office today, pursuant to the requirements of Section 1.1206(b)(2) of the Commission's rules, for each of the above-referenced proceedings. Please contact the undersigned if you have any questions.

Respectfully submitted,

Richard S. Whitt
Director, Federal Affairs

No. of Copies rec'd 0+6
List ABCDE

cc: Kathy Brown
Larry Strickling
Carol Mattey
Don Stockdale

Attachment: WorldCom, Inc. Talking Points on FCC Implementation of Section 706 of the Telecommunications Act of 1996

RECEIVED

JUL 17 1998

FEDERAL COMMUNICATIONS COMMISSION
OFFICE OF THE SECRETARY

WORLDCOM, INC.

TALKING POINTS ON FCC IMPLEMENTATION OF SECTION 706 OF THE TELECOMMUNICATIONS ACT OF 1996

July 1998

Cathy Sloan
David Porter
Rick Whitt

SUMMARY

WorldCom Supports The Laudable Goals Of Section 706, Including Deploying Broadband Services To The Home

- Section 706 Should Be Read In Conjunction With, And Supporting The Mandates Of, Section 251
- The Pro-Competition Goals Of Section 706 Will Be Advanced, And Appropriate Investments Incurred, By Granting All Competitors Access To Network Elements Sufficient To Deploy DSL Technology And Services

In Contrast, RBOC Deregulation Is Completely Unwarranted

- The RBOCs Are Playing Their "Trojan Horse" Strategy
- The 1996 Act Prohibits Premature Forbearance From Section 251(c), Section 271, And Section 272 Mandates
- Section 706, While Important, Cannot Override Section 10 Or Section 251
- DSL Technologies And ADSL Are Well Within The Scope Of Section 251 As Components Of A "Local Exchange Service"
- The RBOCs Need No New "Incentives" To Provide Broadband Services Using DSL Technologies
- A Complete Factual Record Must Precede Any Commission Section 706 Action

WorldCom Supports The Laudable Goals Of Section 706, Including Deployment Of Broadband Services To The Home

WorldCom strongly supports the goals of Section 706, including the availability of broadband services to all American consumers.

> In particular, the Commission should (1) remove remaining barriers to competitive investment, and (2) promote local competition, by taking steps to enforce existing laws and rules to ensure that full-blown competition by multiple providers can develop and flourish.

WorldCom supports the ALTS petition, as well as LCI's proposed approach. The best solution to any perceived problem with delivering greater bandwidth to the home is greater local competition, not further extension of RBOC monopoly power to the data services market.

Section 706 Should Be Read In Conjunction With, And Supporting The Mandates Of, Section 251

Section 251 is the centerpiece of the 1996 Act.

Section 230 also directs the FCC to "preserve the vibrant and competitive free market that presently exists" for data services.

The Act provides three separate competitive entry pathways for requesting carriers to utilize, at their option, to deliver local services to consumers:

(1) Facilities-based entry (Sections 251(c)(2), (c)(3), (c)(6))

(2) Network elements entry (Section 251(c)(3))

(3) Resale entry (Section 251(c)(4))

As both Congress and the FCC have determined, these three separate entry pathways provide the maximum competitive benefits to consumers.

Translated in terms of DSL technology, these three entry pathways require ILEC provision of:

(1) DSL-Capable Loop

(2) DSL-Equipped Loop

(3) DSL Service

CLECs Need Open, Equal, And Nondiscriminatory Access To ILEC Network Elements To Deploy Advanced Broadband Services

In order for CLECs to be able to utilize any or all of the competitive local entry pathways mandated by the 1996 Act, the RBOCs must be required to provide unbundled, cost-based access to the following:

(1) DSL-capable local loops (appropriately conditioned);

(2) The DSLAM (DSL Access Modem/Multiplexer);

(3) The RDSLAM (Remote DSLAM) (where required for Digital Loop Carrier (DLC)-equipped loops);

(4) Meaningful opportunities for collocation;

(5) Switching (circuit and packet-switched) and Interoffice Transport (shared or dedicated); and

(6) Operational Support Systems (OSS)

Under Section 251(d)(2), denying CLECs access to these functionalities and services would "impair" CLECs' ability to provide DSL services ubiquitously, and access to these UNEs is "necessary" for CLECs to be able to provide service the same way any ILEC might.

In Contrast, RBOC Deregulation Is Completely Unwarranted

The RBOCs are using every legal, regulatory, and market power tool to derail local competition and the 1996 Act.

The RBOCs are not meeting their current obligations under the 1996 Act:

- Failure to provide essential facilities to CLECs
- Failure to provide reciprocal compensation to CLECs
- Failure to provide UNE combinations
- Failure to provide Operational Support Systems
- Failure to provide shared interoffice trunks

No satisfactory Section 271 application has been filed to date.

Any deregulatory action would amount to rewarding the RBOCs for their intransigence and stonewalling in complying with the 1996 Act.

The RBOCs Are Playing Their "Trojan Horse" Strategy

Voice networks and data networks are not separate "things;" IT IS ALL ONE NETWORK.

Packet-switching and circuit-switching are merely two different ways of doing the same thing: moving telecommunications traffic. Different labels for the same functionality.

Packet-switched networks carry both voice and data in indistinguishable bits.

The RBOCs' Trojan horse of limiting DSL to "data" services and facilities obscures the reality that all local and interLATA voice and data have been and will be provided over digital services, including DSL.

- HDSL has been in service for nearly a decade as a replacement for T-1 lines in the local loop.

The Pro-Competition Goals Of Section 706 Will Be Advanced, And Appropriate Investments Incurred, By Granting Competitors Access To DSL Technology And Services

DSL technology is not owned by, or proprietary to, the RBOCs; CLECs, not RBOCs, were the first entities to use DSL for Internet access:

- MFS fought for, and received, access to DSL-capable loops in each of its interconnection agreements (1996)
- MFS was the first carrier to develop and deploy a workable IDSL service (1996)
- MFS presented its DSL service to the Commission in a live demonstration (1996); WorldCom made similar demonstrations (1997)

There is little new RBOC investment and innovation required to deploy ADSL service; the key is access by all carriers to the loops, equipment, transport facilities, and OSS.

As required by the 1996 Act, CLECs will pay cost-based rates for each and every RBOC element they utilize; paying customers usually are not perceived to be a burden.

Under the current legal and regulatory structure, the RBOCs and GTE <u>already</u> are busily deploying ADSL all across the country:

- US WEST
- Bell Atlantic
- BellSouth
- GTE

No RBOC appears financially threatened by Section 251; their profits and revenues are up significantly since August 1996.

The RBOCs already have market-based incentives to deploy ADSL; in particular:

(1) the RBOCs seek to meet the competitive threat of cable modems;

(2) the RBOCs seek to meet nascent competition from small CLECs such as Covad and Northpoint;

(3) the RBOCs want to relieve local congestion by moving data traffic to packet-switched networks.

The 1996 Act Prohibits Forbearance From Section 251(c), Section 271, And Section 272 Mandates

The Commission has no legal authority to take away any of the multiple competitive entry pathways under the Act.

Section 10 of the Act (47 U.S.C. Section 160(d)) expressly states that the FCC "may not forbear from applying the requirements of section 251(c) or 271" until those provisions have been "fully implemented" by the Commission.

Section 706 is not an independent grant of authority; the reference to "regulatory forbearance" in Section 706 obviously depends on Section 10 for its meaning.

If Section 706 is deemed an independent grant of authority for "regulatory forbearance," it is also an independent grant of authority for the Commission to adopt and enforce "measures that promote competition in the local telecommunications market."

Moreover, in CC Docket No. 96-149, the Common Carrier Bureau concluded that the FCC lacks authority to forbear from applying Section 272 to any RBOC service for which it requires Section 271 authority.

Section 706, While Important, Cannot Override Section 251

Section 706 is only one of many "Miscellaneous Provisions" of the 1996 Act, and was codified as a mere "Note" to Section 157.

Section 706 also specifies Commission "measures that promote competition in the local telecommunications market."

Section 706 requires that the FCC "encourage" (inspire, give support to) deployment, not adopt industrial policy favoring the incumbents.

Section 706 seeks "reasonable and timely" deployment of advanced capabilities, and all action must be consistent with the public interest.

Section 706 refers to "regulating measures," and the FCC's tools to remove "barriers to infrastructure investment."

Section 706 does not single out the RBOCs or any other carriers, and thus applies to all carriers, including CLECs.

Section 706 makes no mention of packet-switched facilities generally, or DSL service specifically.

ADSL Is Well Within The Scope Of Section 251 As Either A "Local Exchange Service" Or A Network Element

Initially, by filing petitions for forbearance from the application of Section 251(c), the RBOCs already have conceded that Section 251(c) applies to advanced data capabilities such as ADSL.

The Act's definition of "local exchange service" plainly includes DSL:

- Section 153(47)(A): "service within a telephone exchange... to furnish to subscribers intercommunicating service of the character ordinarily furnished by a single exchange"; or

- Section 153(47)(B): "comparable service provided through a system of switches, transmission equipment, or other facilities... by which a subscriber can originate and terminate a telecommunications service."

Moreover, Sections 251(c)(3) and 251(c)(4) refer to "a telecommunications service" and "any telecommunications service," respectively, not "local exchange service."

Network elements are defined broadly to include all the "features, functions, and capabilities" provided by "a facility or equipment used in the provision of a telecommunications service." (47 U.S.C. Section 153(45)).

The Commission retains the authority to identify different or additional network elements to accommodate the "rapid pace and ever changing nature of technological advancement in the telecommunications industry...." (Local Competition Order at para. 246).

The FCC's unbundling rules "must accommodate changes in technology." (Local Competition Order at para. 259). As a result, the Commission should not attempt to draw lines based solely on ever-changing technology.

ADSL technology is just an incrementally more advanced local exchange capability, and part of the natural evolution of the local network to increase the speed, capacity, and efficiency of transmissions.

Further, broadband digital access services are just one type of service possible using xDSL technology; this technology cannot be treated as if it equates only to one type of possible service offering.

There is no textual distinction in Section 153(47), or Section 251, between voice and data services, or basic and advanced services, or packet-switched and circuit-switched services and technologies.

Congress would have, and could have, made such distinctions if it wanted to; packet-switching and DSL technologies existed well before 1996. For example, the RBOCs have been using HDSL for a decade to provide voice grade circuits and private lines.

The FCC's own implementing rules in the Local Competition Order include as unbundled elements packet-switches, and loops with Digital Loop Carrier, ISDN, and DSL electronics.

The Act generally leaves jurisdiction over ADSL and other local exchange services to the States:

- Section 2(b) Of The 1934 Act
- The Supreme Court's Louisiana Public Service Commission decision
- The Eighth Circuit's Iowa Utilities Board decision
- Section 706 explicitly includes the States

The Section 271 checklist, which refers in turn to Section 251(c), applies to the RBOCs by name.

In sum, the RBOCs' Section 706 petitions actually are late-filed reconsideration petitions seeking reclassification and deregulation of local services.

A Complete Factual Record Must Precede Any Commission Action

Section 706 directs the FCC to initiate an inquiry to determine "whether advanced telecommunications capability is being deployed to all Americans in a reasonable and timely fashion."

As a result, the provision requires that the Commission gather a complete factual record before it takes any action.

In order to compile a complete record, the Commission and the States should work together to conduct a comprehensive, state-by-state survey and description of existing local loop plant. This survey should include, by Company and/or wire center:

- total number of local loops;
- classification of loops, including number of all copper ("home run") loops versus copper/fiber ("remote," DLC-based) loops;
- the availability, provisioning, and pricing of DSL-capable loops from the ILECs; and
- number of loops designed to universal service standard.

The RBOCs Need No New "Incentives" To Provide Broadband Services Such As DSL

Congress, in crafting the 1996 Act, already has created the only legally sanctioned incentives system:

- When the RBOCs meet their local competition obligations, they are free to enter the in-region interLATA market.

In addition, market forces already have created competitive incentives for the RBOCs to deploy DSL services.

- To the extent the RBOCs seek to act on those incentives and provide data services, those incentives create significant additional leverage for the RBOCs to meet the local competition checklist.

- The FCC should not simply give away that newfound "carrot" for free.

Additionally, the RBOCs' vague and unsupported promises about meeting the broadband needs of rural and suburban consumers do not square with the current limitations of ADSL technology. Those promises also are unenforceable.

In any event, DSL capability only addresses local plant bandwidth, not interoffice capacity.

Bell Atlantic's Claims About Internet Backbone Congestion Are False

There is no factual support for claimed backbone speeds of 40 kbps.

To the extent Internet congestion exists, it usually centers on the ILECs' "last mile" loop and local switch bottlenecks, and highlights the ILECs' failure to deploy adequate local facilities.

Additional potential Internet congestion points include:

- Modem/PC limitations;
- Servers;
- Web Sites;
- Browsers;
- IntraLATA/interoffice network; and
- NAPs

At the same time that Bell Atlantic claims that the Internet backbone demonstrates average speeds of 40 kbps, the RBOC is actively marketing and selling 128 kbps ISDN service to its customers.
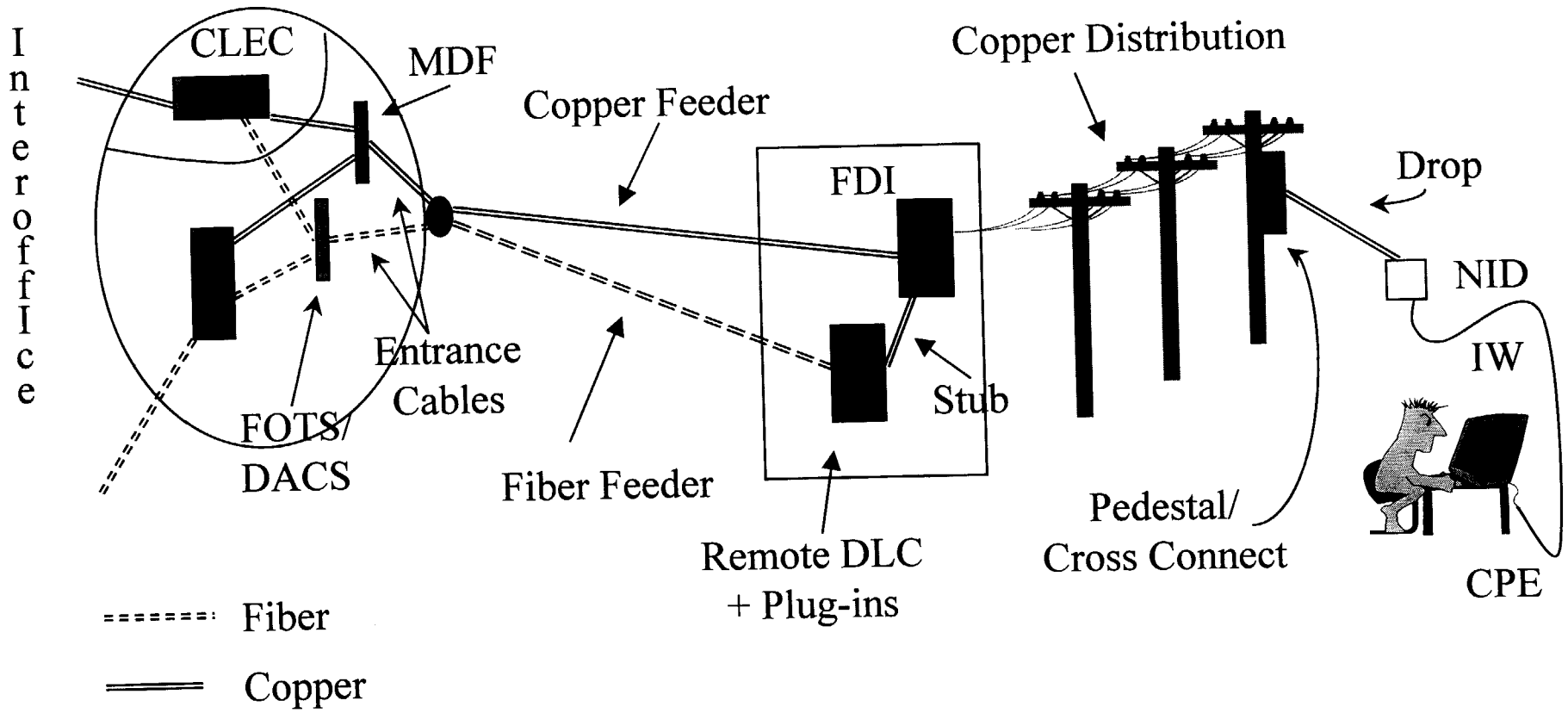
Simplified Loop Design
Principal Outside Plant & Central Office Components