Figure 3-8 Mobile to Mobile - MSC Performs Query

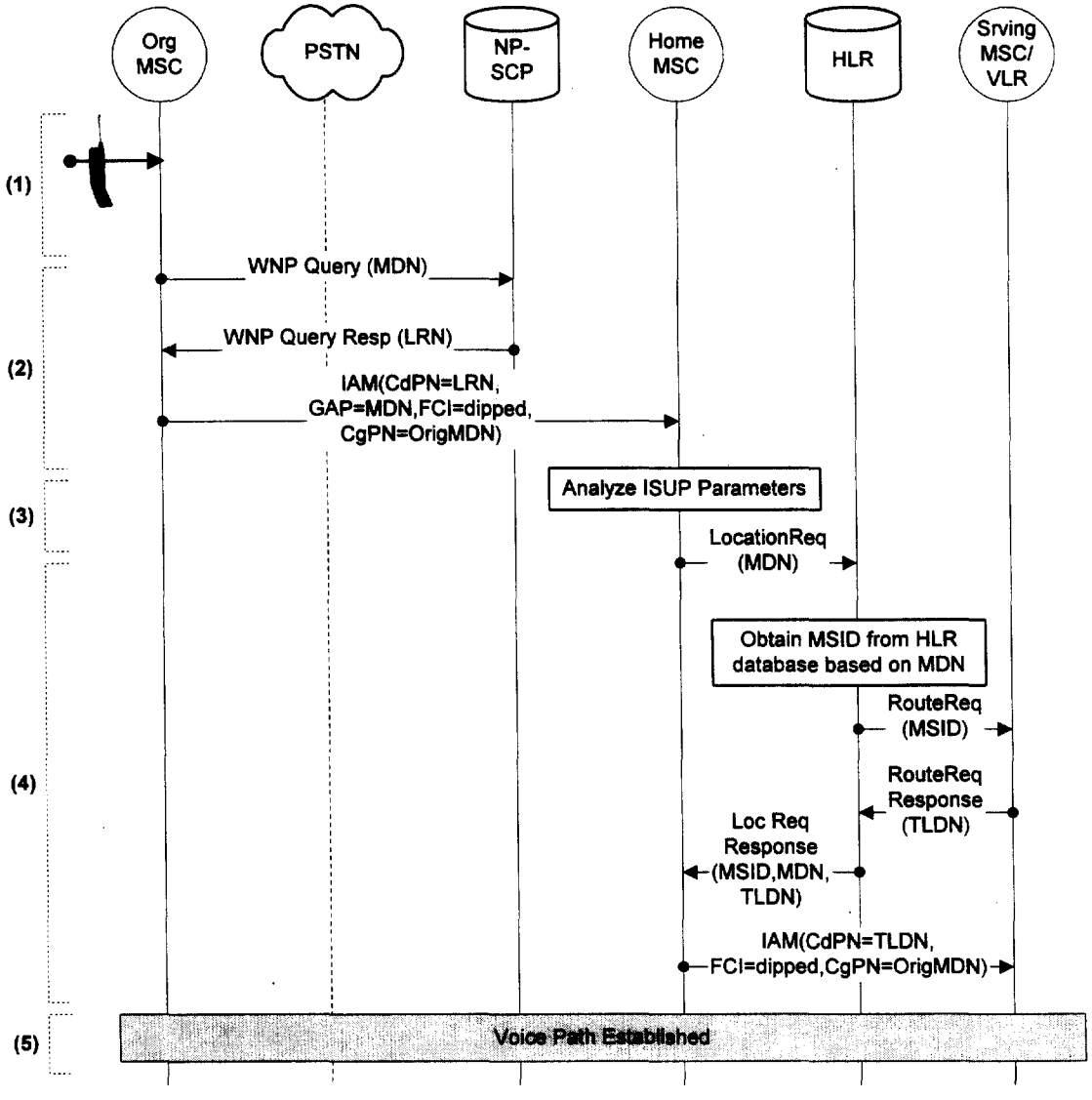

3.3 Feature Interactions

This section describes the effect of WNP on the current base of wireless services.

3.3.1 Operator Services

An MSC can connect to an operator tandem switch in one of the three following ways:

- via a Type 1 connection to a local telephone company central office switch that interconnects with the operator tandem;
- via a Type 2D connection directly to the operator tandem; or
- via a Type 2A connection to an access tandem that interconnects with an inter-exchange carrier operator tandem using Feature Group D (FGD) signaling.

A mobile station dialing any of the following should route the call directly to the operator tandem where, if necessary, it will perform the query:

- 0-
- 00-
- 10xxx0-
- 101xxxx-0-
- 0-NPA-NXX-XXXX
- 10XXX-0-NPA-NXX-XXXX
- 101XXXX-0-NPA-NXX-XXXX

Existing ANI information transfer and AMA recording at the operator tandem will be sufficient to support WNP. However, the MSC must be modified to forward the MDN and not the MSID as the ANI digits.

3.3.2 Roamer Access Port

The Roamer Access Port service is one of several means of supporting call termination to roamers. Another feature of the Roamer Access Port is to allow the caller to directly be connected to the serving system, eliminating the call segment from the home system to the serving system.

Under the Roamer Access Port services today, the caller dials a roamer access port number to reach the visited system and enters a roamer's MIN (which is the same as the MDN prior to number portability). When the switch is WNP capable, then it must interpret the entered digits as the roamer's MDN. It must then map this to the MSID value (either MIN or IMSI) for paging the appropriate mobile station.

3.3.3 Emergency Services

An MSC can connect to Emergency Services Providers (ESPs) in many ways. The current arrangements typically do not automatically forward the mobile station callback number to the ESP. For such arrangements, the ESP attendant must verbally request the callback number, if desired. FCC rules regarding emergency service calls from wireless systems dictate that by April 1, 1998, an MSC must be capable of automatically forwarding the correct mobile station callback number along with information identifying the cell site of call origin.

In any proposed configuration, the MDN must be provided to the ESP for callback purposes. The impact on the MSC with the WNP solution is such that the MSC must be modified to forward the MDN and not the MSID.

To meet the proposed April 1, 1998, FCC requirements, both the MF-FGD signaling and the SS7 ISUP signaling arrangements may, in fact, be utilized. Therefore, the MSC must forward the MDN and not the MSID as the FGD ANI digits and must forward the MDN in the CgPN parameter of the SS7 ISUP IAM message. This requirement applies to both home mobile stations and roaming mobile stations. Consequently, the MDN must be retrieved from the home system for any registered roaming mobile stations.

The impact of WNP with regard to Emergency Callback whether the call back is over a roamer access port or otherwise requires further study.

3.3.4 Short Message Service

Today, the recipient of a short message is identified by an MDN. The originating network uses the dialed MDN to route the short message to the Called Party Home system. The dialed MDN is the same as the MIN or the first 6 digits of the dialed MDN are the same as the first 6 digits of the MIN if the MDN and MIN are separated. Typically, the first six digits of today's dialed MDN or MIN provide sufficient routing information for the short message to be delivered to the Called Party Home system.

The wireless industry has decided to separate the MSID and the MDN to support WNP. As a result, Short Message Service (SMS) delivery is impacted. SMS will not operate properly as it is currently defined if the destination mobile station has ported its MDN. When the mobile station ports to another service provider, it is assigned a new MSID. The new MSID, particularly the first six digits, will identify the new service provider. However, when a short message is initiated to the ported mobile station, the Calling Party will only provide the MDN to the network (in both IS41 and GSM networks). Since the destination MS has ported, the originating Short Message Entity (SME) or the SS7 network must analyze all the digits of the MDN to derive the necessary routing information to deliver the short message to the destination Home system of the ported mobile station.

Five alternatives were originally proposed to address the SMS routing problem in the WNP environment. The five alternative were:

(a) SMS Forward to Service Home MC

(b) Message Center Query, LRN response to Originating MC

(c) MSC Query - LRN response to Originating MSC

(d) MDN-to-MSID translation at the NP SCP (NP DB)

(e) 10-digit GTT at the NP SCP (NP DB)

The recommended solution for WNP SMS is a modification to alternative five and is discussed in the following sections.

The recommended solution for WNP SMS also meets the following criteria as required by the previous CTIA report:

(a) Routing to the Called Party's (Destination) Home MC

If the short message need not go through the Calling Party's Home MC, the short message is sent to the Called Party's Home MC directly from the originator's serving MSC. The case where a short message is sent from the Calling Party's Home MC to the Called Party's Home MC is also covered under this scenario.

(b) Routing through the Calling Party's Home MC

If the SMS Origination Restriction of the originator indicates that the short message must be routed through the Calling Party's Home MC, the short message should be sent to the Calling Party's Home MC first.

(c) International Routing

Each alternative must support the capability to send a short message across International boundaries.

The delivery of SMS messages to a mobile subscriber's Message Center (MC) is impacted by Number Portability (NP) since the message delivery to the destination network is based on the destination subscriber's portable directory number (DN)[42]. The following sections recommend procedures for handling these routing needs with consideration given to:

- Existing translation type assignments for SMS,
- Minimal operational and administration impacts beyond those planned for number portability,
- Network reliability,
- National and international routing needs.

[42] In this contribution, DN is synonymous with MSISDN, MDN & PSISDN.

3.3.4.1 Mobile Originated SMS

The wireless industry has identified three fundamental routing methodologies for Mobile Originated SMS. The methodologies are called here

- Option A: Calling Party's Home MC to Destination Mobile,
- Option B: Originating MSC to Called Party's Home MC
- Option C: Calling Party's Home MC to Called Party's Home MC.

The recommendations herein support all three of these methodologies.

Option A, Calling Party's Home MC to Destination Mobile, provides SMS message delivery from the Calling Party's Home MC to the destination mobile as shown in Figure 0-1.

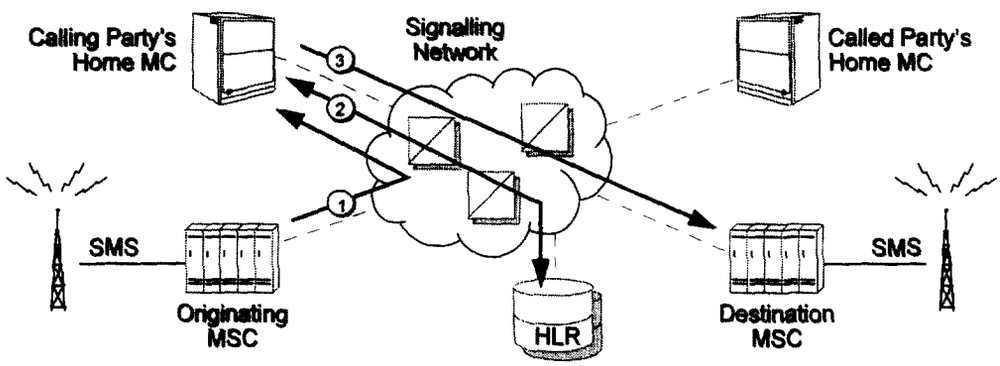

Figure 0-1. Calling Party's MC to Destination Mobile (Option A)

Option B, Originating MSC to Called Party's Home MC, provides SMS message delivery from the originating MSC to the Called Party's Home MC as shown in Figure 0-2.

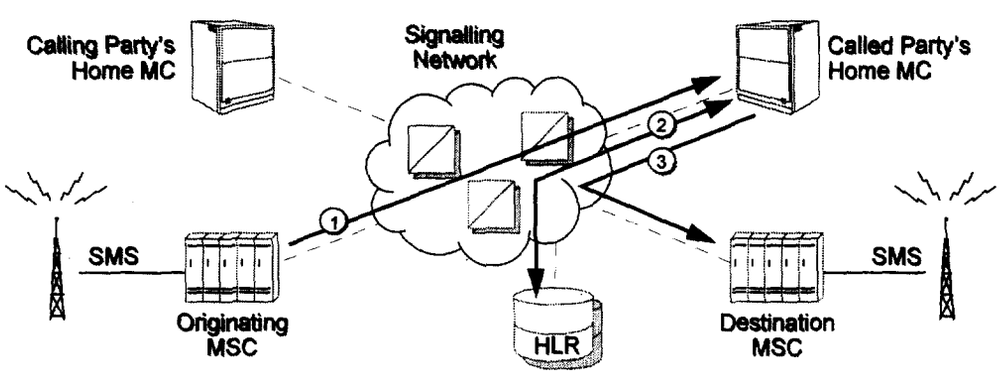

Figure 0-2. Originating MSC to Called Party's Home MC (Option B)

Option C, Calling Party's Home MC to Called Party's Home MC, provides SMS message delivery first to the Calling Party's Home MC. The Calling Party's Home MC then routes the desired message to the Called Party's Home MC. Please see Figure 0-3.

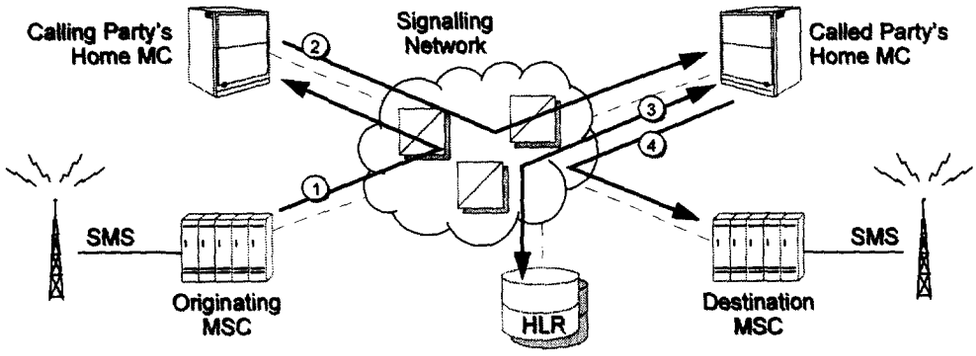

Figure 0-3. Calling Party's Home MC to Called Party's Home MC (Option C)

Options A, B, and C are possible SMS implementations in both IS-41 and GSM networks. They are all supported by the procedures herein. Option C is preferred since it provides the most flexibility in subscriber capabilities.

3.3.4.2 Alternative Path Mobile Messages

The recommendations herein may also apply (as appropriate to the impacts of portability on said method) to short message origination or termination where the short message traverses an alternative path to the above options (e.g., internet). Once at the MC, the procedures pick up according to the access point. For example, if the SMS is externally delivered first to the Calling Party's Home MC, then the procedures herein pick up at that MC. If the SMS is externally delivered to the Called Party's Home MC, then the procedures pick up from that point of the procedures described herein.

3.3.4.3 MTP versus SCCP Routing

All three options may route messages using

- End-to-end signaling as provided by ANSI SS7-Message Transfer Part (MTP), or
- Routing on global title as provided by ANSI SS7- Signaling Connection Control Part (SCCP).

In a WNP environment, near real time SMS routing updates for porting subscribers will be required. This will prove administratively prohibitive if just MTP routing is used since SS7-SMS message originating entities (e.g., possibly all MSCs and MCs) will need to updated during the 15 minute update window. The use of SCCP GTT logically fits into the planned (in some cases, existing) NPAC provisioning process for ported subscribers at the NP DB.

3.3.4.4 Delivery to the Calling Party's Home MC

Two translation types are currently defined (though not letter balloted by T1/T1S1) for routing to the Calling Party's Home MC:

- Translation Type 12 - MIN based GTT to the Calling Party's Home MC,
- Translation Type 13 - IMSI based GTT to the Calling Party's Home MC.

These translation types are used for routing to the Calling Party's Home MC based on MIN and IMSI. The use of these translation types is recommended for those configurations that deliver the SMS message to the Calling Party's Home MC and for those configurations without the ability to route on the Calling Party's DN.

Since the MIN (i.e., MSID[43]) and the IMSI are not portable entities, there are no number portability impacts currently identified for translation types 12 and 13.

For those configurations with the ability to utilize the Calling Party's DN (Cg-DN), the Cg-DN can be used for global title routing to the Calling Party's Home MC:

- Option A: DN used to route to Calling Party's Home MC,
- Option C: DN used to route to Calling Party's Home MC.

The use of the Cg-DN, however, will require the introduction of a new translation type for routing to the Calling Party's Home MC. This same translation type, as discussed below, can also be used for routing to the Called Party's Home MC.

3.3.4.5 Delivery to the Destination Network

Regardless of the protocol (IS-41 or GSM) or the network topology (Options A, B, or C), at some point an inter-network SMS message is routed based on the Called DN. More specifically, the Called DN is used as the global title address (GTA) for SCCP GTT. In all cases, regardless of the protocol, the Called DN is a unique E.164 number. The GTT routing needs using called-DN for each option are summarized below:

- Option A: Use Called DN to route to the destination HLR,
- Option B: Use Called DN to route from the Originating MSC to the Called Party's Home MC,
- Option C: Use Called DN to route from the Calling Party's Home MC to the Called Party's Home MC.

3.3.4.6 Message Flows

The "Signaling Network" entity in the following message flows is defined as the necessary SS7 functions for performing global title translation and for inter-network connectivity. The specific

[43] Note that in an NP IS-41 environment, the MIN and MDN are separated. To help identify this separation, the term MSID is used for MIN. The term MDN is unchanged.

global title translation procedure and nodes used for number portability are not shown here for purposes of simplification in identifying SMS message flow. It is assumed in these message flows that a number portability process has occurred within the signaling network thus resulting in the proper message delivery. The impacts of number portability are discussed later in this document.

Below is the message flow for Option A, Calling Party's Home MC to Destination Mobile.

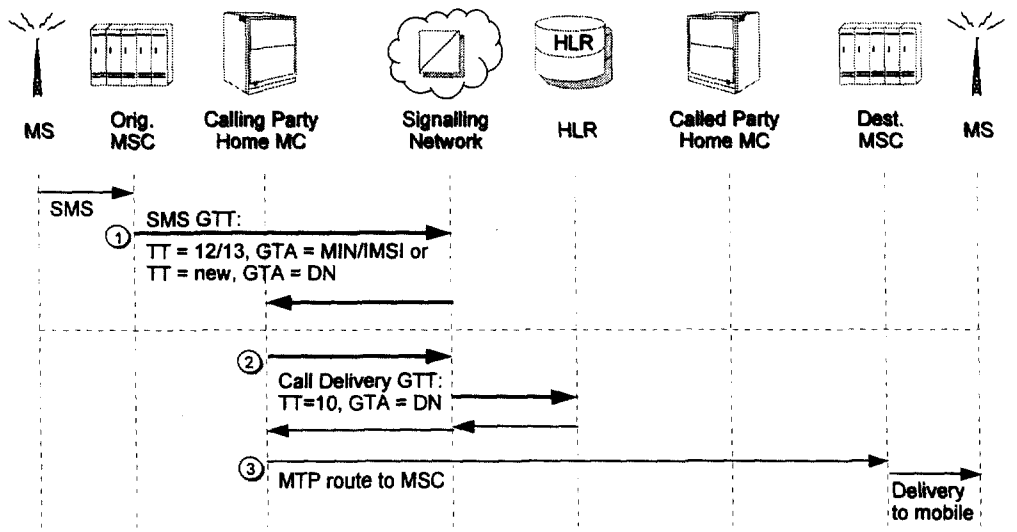

Figure 0-4. Option A Message Flow

(1) SMS originated.

(2) Orig MSC sends SMS to Calling Party's Home MC requesting GTT routing. In absence of the Calling Party's DN, translation types 12 or 13 may be used. If the Calling Party's DN is present, a new "DN-to-MC" translation type is used to route to the Calling Party's Home MC.

(3) Signaling Network routes using GTT as requested to Calling Party's Home MC.

(4) Calling Party's Home MC routes to HLR using translation type 10.

(5) HLR returns Called Party's location to Calling Party's Home MC.

(6) Calling Party's Home MC MTP routes to Destination MSC.

Below is the message flow for Option B, Originating MSC to Called Party Home MC (a.k.a. direct routing).

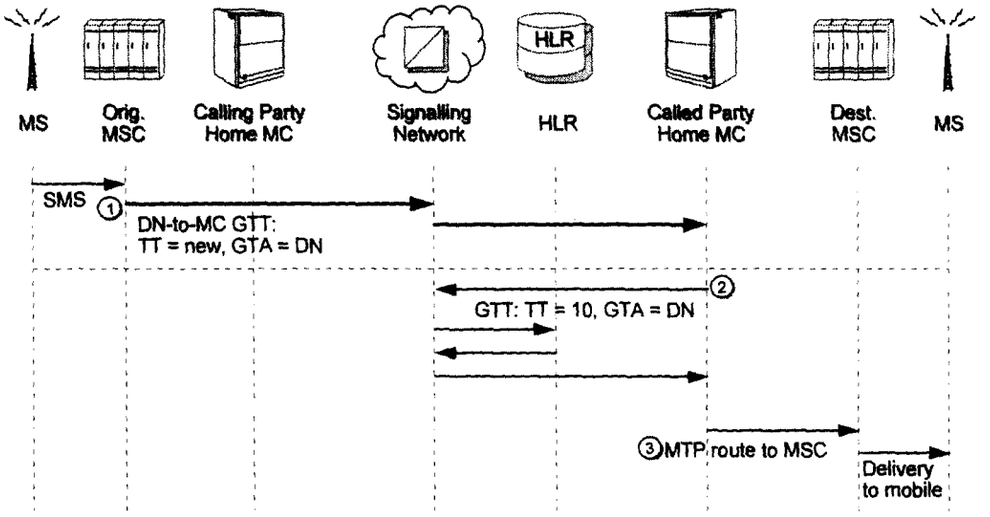

Figure 0-5. Option B Message Flow

(1) SMS originated.

(2) Orig MSC sends SMS to Signaling Network requesting GTT using the new "DN-to-MC" translation type.

(3) Signaling Network, using the new "DN-to-MC" translation type, performs GTT and delivers the SMS to Called Party's Home MC.

(4) Called Party's Home MC routes to HLR using translation type 10.

(5) HLR returns Called Party's location to Called Party's Home MC.

(6) Called Party's Home MC MTP routes to Destination MSC.

Below is the message flow for Option C, Calling Party's Home MC to Called Party Home MC (a.k.a. indirect routing).

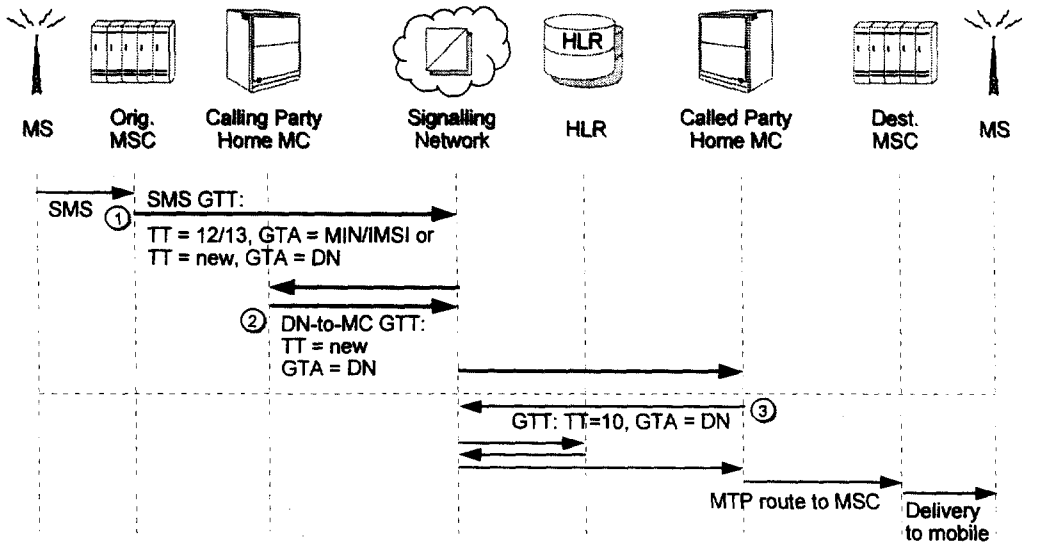

Figure 0-6. Option C Message Flow

(1) SMS originated.

(2) Orig. MSC sends SMS to Signaling Network requesting GTT routing. In absence of the Calling Party's DN, translation types 12 or 13 may be used. If the Calling Party's DN is present, the new "DN-to-MC" translation type is used.

(3) Signaling Network routes to Calling Party's Home MC using GTT as requested.

(4) Calling Party's Home MC sends SMS to Signaling Network requesting GTT routing using the Called DN with the new "DN-to-MC" translation type.

(5) Signaling Network, using the new "DN-to-MC" translation type, performs GTT and delivers the SMS to Called Party's Home MC.

(6) Called Party's Home MC routes to HLR using translation type 10.

(7) HLR returns Called Party's location to Called Party's Home MC.

(8) Called Party's Home MC MTP routes to Destination MSC.

3.3.4.7 Comparison of Message Delivery Options

This section compares the three message delivery (i.e., routing) options.

Options A and C both show routing the SMS message from the originating MSC to the Calling Party's Home MC using translation types 12 or 13 (i.e., MIN / IMSI). This method meets the

routing needs for those carriers who only have a MIN or IMSI for routing to the Calling Party's Home MC.

A carrier that is utilizing Options A and C and has the Calling Party's DN available, may use GTT routing based on Cg-DN for routing to the Calling Party's Home MC. This is the same GTT routing table used for locating the Called Party's Home MC as described below.

Options A, B, and C all can use translation type 10 for queries to the HLR. Today, many networks MTP route to the HLR. For GTT routing to the HLR, translation type 10, though specified for PCS call delivery, can be used regardless of the protocol (IS-41 or GSM).

Options B & C both require the need for routing to the Called Party's Home MC based on Cd-DN. Translation type 10 currently routes using the DN to get to the HLR. This conflicts with the needs for routing to the Called Party's Home MC and therefore can't be used. Because of this conflict (i.e., unique routing needs for SMS), the DN-to-MC translation type is needed. This new translation type is useable in both IS-41 and GSM networks since the DNs in both networks are unique and of the same format (i.e., E.164).

3.3.4.8 New DN-to-MC Translation Type

Both GSM and IS-41 networks utilize GTT routing to the MC based on the DN. Since DNs are unique, one new translation type will serve the needs of both of these protocols. The carrying of different application parts does not impact the GTT process. This translation type carries the E.164 formatted DN. The purpose of this translation is to route to an MC associated with the specified DN. The DN carried in these messages identifies either the Calling Party or Called Party, based on the routing needs of the SS7 message originator. This new translation type is subject to the impacts of number portability since both the Calling Party or Called Party can be portable.

There is no translation type currently defined for DN-to-MC routing. Justification is therefore identified for requesting assignment of this new translation type from T1S1 (if this translation type meets the needs of the wireless industry).

3.3.4.9 Signaling Network Impacts

Signaling network GTT procedures for E.164 GTAs can deliver inter-network messages using GTT (with DN and the DN-to-MC translation type) up to the boundaries (defined by GTT databases) of an area of portability using seven-digit GTT. At this point, an eleven-digit GTT procedure against a number portability database is required for proper network termination to the addressed Home MC.

3.3.4.10 Translation Type 10 (PCS Call Delivery)

Translation type 10 carries an E.164 formatted DN for delivery to the indicated subscriber's HLR. Since the DN carried in these messages can identify a portable subscriber, translation type 10 is may be subject to the impacts of number portability whenever it is used for message delivery to a ported subscriber.

For normal call delivery, however, translation type 10 will be impacted since it is used to deliver calls to ported subscribers.

3.3.4.11 DN-to-MC Global Title Address Format

The format of the Global Title Address (GTA) is based on the E.164 numbering plan. For World Zone 1 (WZ1)[44], the format is shown in Figure 0-7.

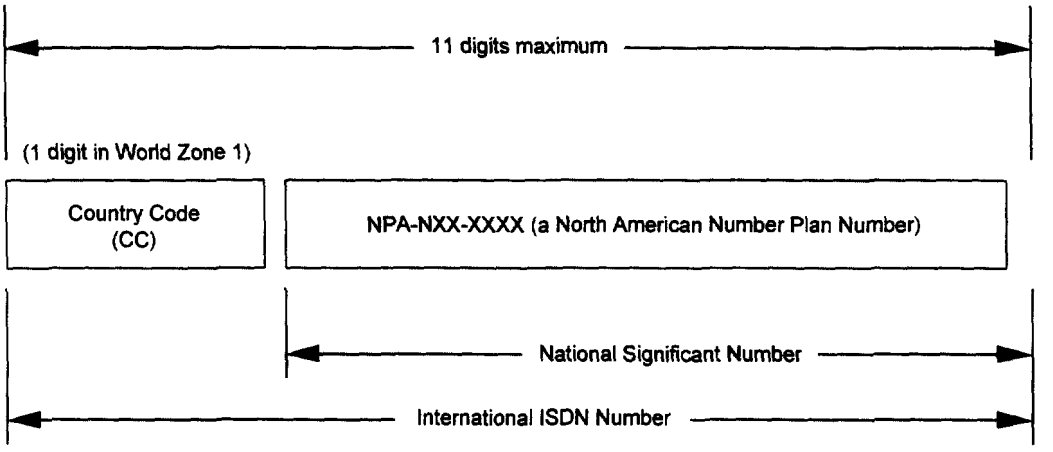

Figure 0-7. E.164 Number Format Inside WZ1

- Within WZ1, the maximum length of the E.164 GTA is 11 digits.
- The Global Title indicator is 0010.
- The digits of the GTA are Binary Coded Decimal in 1/2 octet per digit.
- For Numbers outside WZ1, the format of the E.164 GTA is shown in Figure 0-8.

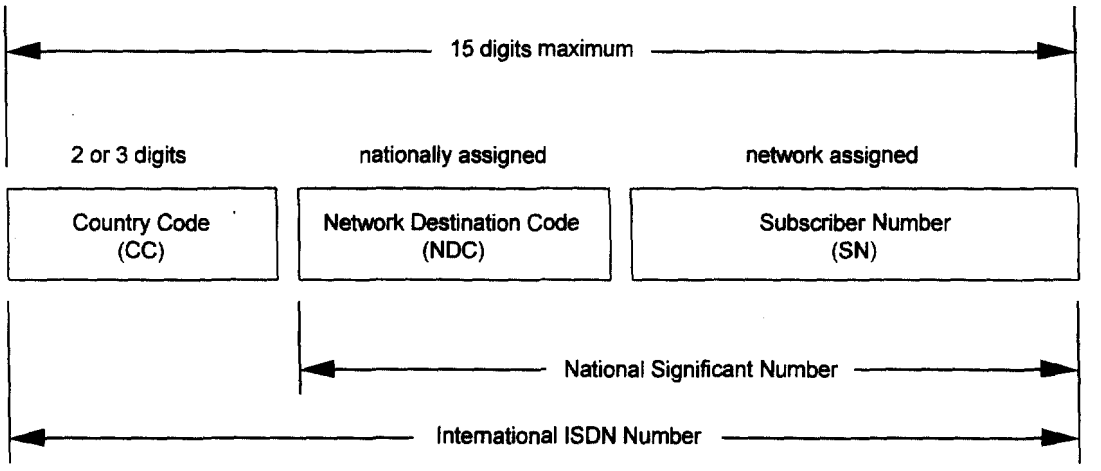

Figure 0-8. E.164 Format Outside WZ1

[44] World Zone 1 is more formally known as Integrated Numbering Plan 1.

- The maximum length of the E.164 GTA information is the maximum allowed by the numbering plan (up to 15 digits).
- The country code (CC) is 2-3 digits.
- The National Destination Code (NDC) length depends on the country in question.
- The SN is the subscriber number.
- The Global Title Indicator is 0010.
- The digits of the GTA are coded in Binary Coded Decimal of 1/2 octet per digit.

3.3.4.12 SMS GTT Procedures

When the CC indicates that the country is in WZ1 (i.e., CC=1), the E.164 GTA information contains 11 digits.

SMS GTT procedures, upon encountering CC=1, perform six-digit GTT on digits two through seven (i.e., the NPA-NXX) to route to the boundaries (defined by GTT databases) of an area of portability.

Within the area of portability (or at a NP DB serving multiple portability areas), a ten-digit GTT using digits two through eleven (i.e., the NPA-NXX-XXXX) is required for delivery to the appropriate network. If an entry is not found in the SMS ten-digit GTT database, a default GTT will be required. The default GTT is performed typically on the NPA-NXX portion of the GTA.

The output of the final GTT is the DPC and SSN of the MC to which the message is being routed.

As stated earlier, the GTA contains either the Calling Party's DN or the Called Party's DN, the selection of which is done according to the needs of the query originator (i.e., routing to the Calling Party's Home MC or the Called Party's Home MC).

When the CC indicates a country outside WZ1, the E.164 GTA information contains the maximum allowed by the numbering plan. Global Title Translation on the first three (3) digits is required to route to the destination country. The message may need to traverse an inter-national gateway to convert between national and inter-national protocols.

3.3.4.13 Number Portability GTT Signaling Network Performance Impacts

GTT processing performance (i.e., the amount of time required to do a GTT) is not necessarily an issue for SMS;- it is, however, a major issue for translation type 10 and other time sensitive network capabilities. Service providers should review this area with their vendors to ensure GTT processing performance meets the needs of their networks.

3.3.4.14 NP GTT Database Provisioning for SMS

Wireless networks are expected to interface to the NPAC so that they obtain the necessary information to deliver calls to ported subscribers and, in the future, pooled number management. Given that an NPAC interface is required for ported subscribers, it make good sense to utilize it for SMS.

Adding new GTT provisioning requirements (i.e., reservation of service space for point code and subsystem) to this interface should be minimal. The GSM side of the industry has already requested NPAC space in support of two applications to include the NP routing needs for SMS and to support the need for another application if so needed. The use of the recommendations herein would use these two reservations for the new DN-to-MC translation type and for translation type 10.

Not using NPAC is undesirable. In the absence of NPAC, each service provider would be required to manually update records as NPAC added and removed records from the NP databases. Doing such is perceived as administratively impossible due to the anticipated volume of updates.

As stated earlier, the E.164 format of the DN is an eleven digit format where the last ten digits are a North American Numbering Plan (NANP) number. Only the ten-digit NANP needs to be administered via NPAC. The ten-digit NANP number matches the existing lengths of other number portability affected inter-network services within the NPAC. The LSMS, when receiving updates for translation types 10 and "new", will be required to send the update request to the affected nodes which contain the global title tables (i.e., the NP DB). The NP DB, upon receiving the SMS GTT update, updates its ten-digit GTT table accordingly. Note that this administration process does not have to administer eleven digit numbers.

3.3.4.15 Default Database Provisioning

For non-portable numbers, a default GTT database is needed. This default database contains the routing needs for non-ported numbers. That is, it contains the routing structure used prior to number portability. This database is provisioned by means other than the NPAC.

The default GTT table contains sufficient digits to route to the appropriate network. In most cases, GTT on the six-digit NPA-NXX will satisfy this need. Note that an LRN is not recommended in the default table since it unnecessarily uses a vital network resource and requires network agreements with each interconnecting network.

3.3.5 Nationwide Roaming

Roaming is essential to wireless services. The FCC *First Memorandum Opinion and Order on Reconsideration* mandates that "... by June 30, 1999, CMRS providers must... be able to support nationwide roaming." [45]

[45] Paragraph 136.

Per the WNP Architecture, a ported subscriber will have a MIN,[46] as an MSID, different from the MDN. When a subscriber roams, the mobile station communicates the MIN to the Serving MSC via the air interface during registration. The MDN is transmitted to the Serving MSC from the home network HLR via protocol message transaction – via the IS-41 RegistrationNotification Return Result, for example. It is assumed that if the home network is capable of supporting a subscriber with a MIN not equal to the MDN, the home HLR is capable of transmitting the MDN to the Serving MSC. If the Serving MSC has been upgraded to recognize the MDN in the registration response and store it in the VLR, then the roaming subscriber should be able to receive calls and services consistent with the service offering and roaming agreements.

In summary, independent of whether a switch carries traffic in or out of a top 100 MSA, in order for a switch to be able to distinguish between the MSID and the MDN, the following must hold true:

- The roaming subscriber's HLR can store the MSID and a separate MDN.
- The Serving MSC's VLR can store the MSID and a separate MDN for the roaming subscriber.
- The Serving MSC switch software has been upgraded to record the MSID and the MDN on the Call Detail Records (CDR).

3.3.5.1 Service Impacts

However, if the Serving MSC has not been upgraded to recognize the MIN as separate from the MDN, it will not be capable of receiving and storing the MDN. It will, therefore, continue to treat the subscriber's MIN as the telephone number. As a result the following capabilities will be degraded:

- *Automatic Number Identification (ANI) or Charge Number* – The WNP Solution recommends that the ANI or Charge Number (CHN) equal the MDN for all wireless calls. Maintaining the ANI or CHN as the telephone number is essential for consistent long distance carrier recording and direct billing. If the ANI of CHN is set to the MIN, one of two things may happen:

  (a) If the MIN is equal to some other's MDN, the wrong subscriber may be billed for the call. This scenario opens up the long distance carriers to potential fraud.

  (b) If the MIN is not a NANP number, the long distance carrier may not be able to bill the call at all, or may even drop the call.

  Other services that are dependent upon the ANI or CHNbeing a telephone number may also be impacted.

- *Calling Number Identification (CNI)* – Calling Number services are based on the Calling Party Number being equal to the telephone number, the MDN. If the Serving MSC only

[46] MIN is used for sake of clarity in this paragraph but does not preclude the use of IMSI.

knows the MIN and therefore sets the Calling Party Number to the MIN, the wrong number (potentially another's telephone number) will be displayed to the called party.

- *Emergency Services* – If the roaming subscriber dials "911" and if the Serving MSC only supports the MIN, the Serving MSC will present the MIN to the Public Safety Answering Point (PSAP) which may be an incorrect callback number. Refer to §3,3,3 for more information on the impacts of the MIN/MDN Separation on Emergency Services.
- Any other MDN-based services (e.g., CLASS, Operator Services, Customer Care) may be jeopardized when the subscriber is roaming into a serving network which does not recognize the separation.

Due to the FCC mandate to support nationwide roaming (along with WSP business needs) and due to the need to separate the MIN and MDN in order to feasibly port wireless subscribers, wireless providers involved in roaming yet outside the top 100 MSAs must still enhance their network to serve subscribers with MINs not equal to MDNs.

3.3.6 Recording

3.3.6.1 Call Detail Records

The following modifications are anticipated to the MSC Call Detail Records (at a high level – switch vendors may have varying formats):

- The MSID must be included on all CDRs. This includes the MSID of the Calling Party for mobile originated calls as well as the MSID of the Called Party for mobile terminated calls.
- The MDN should also be recorded for both mobile originated and mobile terminated call records. (There may exist some scenarios where a serving switch does not have the MDN, e.g., when an anchor switch holds the VLR record.)
- For originating calls, a query attempt should be noted on the CDR. If successful, the LRN, if returned, should also be recorded. If unsuccessful, the failure should be recorded.
- For terminating calls, the FCI indicator should be recorded to note if the previous network (N-1) queried as responsible.

3.3.6.2 Charge Party Number and FGD ANI

The Feature Group D (FGD) ANI and ISUP Charge Number should be the MDN of the calling party and not the MSID.

3.3.7 NPA Splits and Overlays

Number Portability has the potential to increase the impact on call processing for both wireless and wireline during the permissive dialing periods associated with NPA splits. These problems arise from the methods used to add the NPA to a seven digit dialed call during the permissive dialing period. Normally, the routing issues are complex enough during an NPA split due to

problems with the complexity of the geographic boundaries of the split and means of identifying which codes go with which NPA. Permissive dialing periods may introduce additional problems. These same issues may also exist for overlays depending on the extent of the overlay, the density of the numbers, and the decision to do 10 digit dial or not.

4. BUSINESS AND OPERATION SYSTEMS AND BILLING

This section addresses the impacts of Number Portability on the service provider back office systems, including systems involved in number inventory management, the porting of subscribers, provisioning and billing.

This section addresses the current processes as defined by the wireline industry and endorsed by the NANC and its various subcommittees. The wireless industry requested and NANC agreed to perform a feasibility study to replace the LSR process for inter-carrier communication. Current agreement is to use the existing process in the interim until the NANC recommendation. Procedures relating to the NPAC-SMS are based on the NANC specifications, *NPAC Interoperable Interface Specification and the NANC Functional Requirements Specification*, and can be found on the www.npac.com web site.

4.1 Service Order and Provisioning Architecture

The components of the service order provisioning architecture are shown in Figure 4-1. The NPAC (SOA and LSMS) interfaces are subject to standardization and the LSR process is defined by the Ordering and Billing Forum (OBF). Some of the system elements shown are for completeness and are not subject to standardization. At the highest level, there are three types of business entities shown.

Figure 4-1 Basic Provisioning Architecture

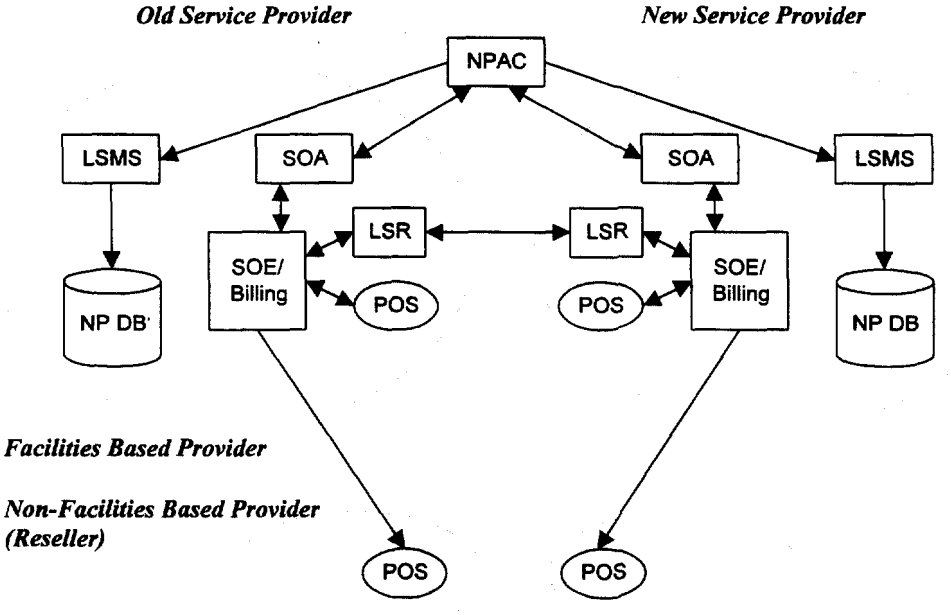

4.1.1 Number Portability Administration Center Service Management System (NPAC SMS)

The NPAC SMS (a.k.a. "NPAC") is a hardware and software platform which contains the database of information required to effect the porting of telephone numbers. In general, the NPAC SMS can receive customer information from both the old and new Service Providers (including the new Location Routing Number), validates the information received, and downloads the new routing information when an "activate" message is received indicating that the customer has been physically connected to the new Service Provider's network. The NPAC SMS also contains a record of all ported numbers and a history file of all transactions relating to the porting of a number. The NPAC provides audit functionality and the ability to transmit LNP routing information to Service Providers so they can maintain synchronization of Service Provider's network elements that support LNP.

The NPAC is owned and operated by a neutral, third-party entity. Presently, there are seven logical NPACs that cover geographic areas roughly corresponding to the state boundaries associated with the seven Regional Bell Operating Companies (RBOCs). This is operated by Lockheed Martin IMS under contracts awarded by the seven regional Limited Liability Companies.

Two separate mechanized interfaces to the NPAC are defined. The interface between the NPAC and the LSMS is an open interface based upon the Common Management Information Protocol (CMIP) and is used primarily for the dissemination of routing information. The interface between the NPAC and the SOA is also a CMIP-based interface and is used primarily used by the old and new service providers to effect the porting of a subscriber. These interfaces, including the CMIP objects, as well as the functionality of the NPAC are documented in specifications maintained by the North American Numbering Council.

In addition to the mechanized interfaces, the NPAC may provide a "low tech" interface consisting of an internet accessed web page interface. This interface is provided for the benefit of carriers which are expected to have a low volume of port requests.

4.1.2 Facility Based Service Providers

These are CMRS licensed entities which own and operate facilities for providing two way communication services. In Figure 4-1, these are exemplified as the "old" (a.k.a. "donor") service provider and the "new" (a.k.a. "recipient") service provider. Each facility based service provider is assumed to be fully WNP capable. This implies they are able to communicate with the NPAC via the Service Order Activation (SOA) interface as well as generate and accept requests for the porting of subscribers.

4.1.3 Resellers

These are non-facility based providers of two-way wireless service by virtue of a reselling business arrangement with a facility based provider. Resellers are allocated blocks of numbers by the facility based provider and can provide customer service, maintains the subscriber information, and performs billing. The reseller may rely on the facility based provider to perform activation and de-activation for individual numbers as necessary. The activation/deactivation is

accomplished through non-standard communications interfaces between the reseller and facility based provider.

4.1.4 Functional Systems/Interfaces

The functional systems are used to affect the necessary provisioning between and within service providers. While the functional systems are not subject to standardization, their description is included to provide an overall view of the provision process. It should be noted that service providers have flexibility regarding how these systems are implemented.

4.1.4.1 Service Order Activation (SOA)

The SOA system implements the interface required by each facility based service provider for communicating information regarding a ported subscriber to/from the NPAC. It is involved both when a subscriber ports to or from a service provider. The SOA communicates with the facility based service provider's service order entry/billing/provisioning system(s), but the method of communications is not subject to standardization. The depiction of this system in the figure is for completeness only. The SOA interface to the NPAC is documented in the NANC Interface Interoperability Specification.

4.1.4.2 Local Service Request (LSR)

The LSR process is one method of communication between service providers. The LSR consists of specific information that is communicated to coordinate the porting of subscribers between the old and the new service provider. The use of the LSR process is determined through inter-carrier business agreements. A variety of methods may be used for transferring LSR information, including fax, e-mail transfer, or Electronic Data Interchange (EDI). It is expected that the larger facility based providers would prefer an automated version and that they would also accommodate a "low tech" version as well. Appendix B contains information regarding which fields in the LSR are to be used in porting to a wireless carrier.

For facility based providers, the LSR process, if used, would communicate internally with the service providers service order entry/provisioning/billing system as appropriate and is not subject to standardization. For non-facility based providers, the information must be conveyed to the facility based provider. While the LSR process may be used between a reseller and the facility based provider, this aspect is not subject to standardization.

4.1.4.3 Point of Sale system (POS)

This system(s) can be used by facility and non-facility based service providers to enter ported customer information. The POS functions and method of communication with the SOE system is not subject to standardization and is shown for completeness only.

4.1.4.4 Service Order Entry/Billing System

This system serves to maintain subscriber records as provided by the POS system and coordinate the porting activities to the various systems involved. Its interfaces and functions are not subject to standardization and its depiction in the architecture is for completeness.

4.1.4.5 Local Service Management System (LSMS)

The LSMS receives downloads from the NPAC with current routing information for ported subscribers. The LSMS populates the necessary NP DBs which may be deployed by a wireless provider. Both the LSMS and NP DB are not required to be deployed by a facility based service provider as arrangements can be made to access another service provider's database through contractual arrangements.

4.1.4.6 Number Portability Data Base (NP DB)

The NP DB is the database queried by switches for ported routing information. Deployment of this element is not required by each provider. Access to another service provider's database can be substituted.

4.2 Porting Business Process Flows

The business process flows describe the passing of information between service providers necessary to coordinate the porting of a subscriber. This includes various combinations between facility and non-facility based providers in both porting-to and porting-from instances. The following text illustrates some of the more common examples, but it should be noted that variations are possible. These include:

- Implementation of non-standard communication methods between a reseller and their associated facility based provider.
- Establishment of business agreements between a reseller and their facility based provider so that the facility provider handles all LSR requests on behalf of the reseller.
- The LSR process itself is subject to agreement between two carriers and can be modified or substituted with another process with their mutual consent.
- The wireless use of the LSR process may eventually be replaced with a different wireless inter-carrier communications process.

Because the wireless inter-carrier communications process is under study (i.e., replacement of the LSR process), the examples provided should be considered guidelines and not mandatory requirements for effecting the coordination of a subscriber porting. However, any communication between a service provider and the NPAC is subject to standardization.

The porting intervals when porting between wireless carriers includes a Firm Order Confirmation (FOC) response of 30 business minutes, and maximum waiting period for porting a customer to 2 business hours. The maximum number of hours for the porting process between wireless carriers is two and one-half business hours which includes the 30 business minutes for the LSR/FOC exchange.

4.2.1 Assumptions

For the examples listed below, various assumptions are made regarding the procedures.

- The porting subscriber contacts the recipient provider who then initiates the porting process. While it is possible that the subscriber could initiate porting by contacting their current service provider, this is not anticipated to be the normal case.
- The examples focus on typical scenarios, but are no means complete. Various conditions, including errors, fraud situations, and time-outs can occur but are not shown. These are briefly discussed later.
- Security aspects, such as validating the recipient service provider's request, are not described.
- Resellers are obligated to support the porting of subscribers. However, resellers may have obligations regarding the porting of a subscriber that are not explicitly stated in this document.
- When porting from a reseller, the associated facility based service provider must obtain concurrence from the reseller prior to acknowledging the port to the NPAC.
- It is assumed that the old service provider does not place the order into conflict which then suspends the porting process. It should be noted this may occur for various reasons, some of which are listed.
- It is assumed that the recipient service provider has decided to accept the subscribers porting request and any credit or fraud checks have been performed.
- The examples are based on wireless service providers. The same architecture and business flows could be used to illustrate porting that involves a wireline service provider .
- It is assumed that when a subscriber ports from wireless to wireless, both WSP cooperate to effect a timely porting (e.g., less than 2 ½ hours were possible).

In the following examples, a letter following a number (e.g. "4b") indicates that the action occurs in parallel with other activities with the same number.

4.2.2 Facility-based to Facility-based Service Provider Porting

The information flow is shown in Figure 4.2. Since the two carriers involved are facility based, no reseller involvement is necessary, however, they are included in the figure for completeness.

Figure 4-2 Provisioning Flow between Two Facility Based Providers

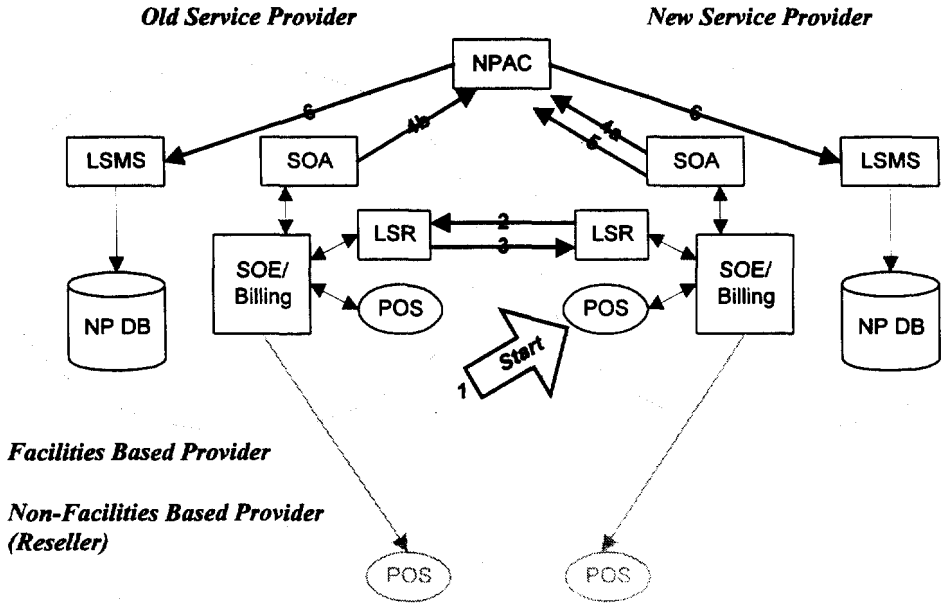

The steps are as follows:

1. The customer contacts the recipient service provider and agreement is reached to port the number. This may utilize the service providers existing Point of Sale system.

2. The recipient service provider then prepares and sends three Local Service Request (LSR) forms to the old service provider. These are the Local Request Form, End User Information Form, and the Number Portability Form. The recipient service provider indicates the desire due time on the Local Request Form for the porting of the number.

3. The old service provider verifies the information and determines that the number can be ported. It acknowledges this in the Local Request Confirmation Form.

4a. The recipient service provider initiates a "create" message to the NPAC indicating the subscriber's number and due time.

4b. The old service provider initiates a "create" message to the NPAC indicating concurrence with the port and acknowledges the due time. If the information differs from that indicated by the recipient, the NPAC initiates conflict resolution procedures.

5. The new service provider sends an "activate" message indicating that the NPAC should broadcast the updated information. The activate message must be sent after the due date indicated in the previous create message.

6. The NPAC then broadcasts the updated information.

4.2.3 Facility-based to Reseller Service Provider Porting

The information flow is shown in Figure 4.3. In this scenario, the reseller may or may not accept LSR requests directly. Smaller resellers are expected to rely on their facility based provider to exchange information with the old service provider. The communication between the reseller and their associated facility provider may based on the LSR process or it may be based on a proprietary method of communication.

Figure 4-3 Provisioning Flow for Porting from Facilities-based Provider to Reseller

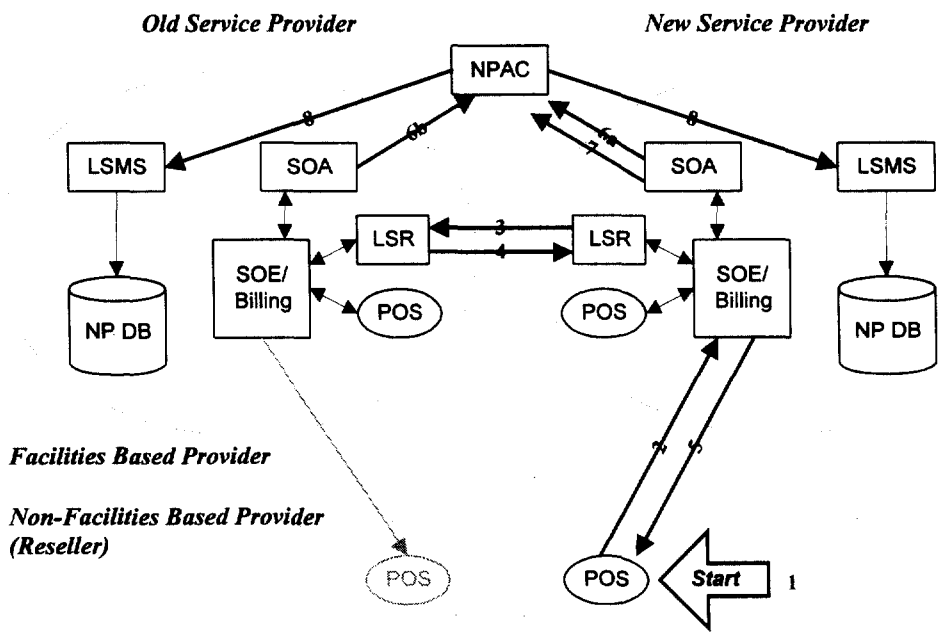

The steps are as follows:

1. The customer contacts the recipient service provider and agreement is reached to port the number. This may utilize the reseller's existing Point of Sale system.

2. The recipient service provider then communicates to their associated facility provider to act as their agent in porting in the subscriber.

3. The facility based provider initiates the LSR forms to the old service provider. The facility based provider must be provided by the reseller the necessary information (such as customer name and number) to populate the forms.

4. The old service provider returns confirms the porting.

5. The facility base provider confirms that the port will take place to the reseller.

The remaining steps are as described in Section 4.2.1.

4.2.4 Reseller to Reseller Service Provider Porting

The information flow is shown in Figure 4-4. In this scenario, both the recipient resellers implements their own LSR process and does not rely on their respective facility based providers to act as their. The communication between the reseller and their associated facility provider may based on the LSR process or it may be based on a proprietary method of communication.

Figure 4-4 Alternative Provisioning Flow when Porting from Reseller to Reseller

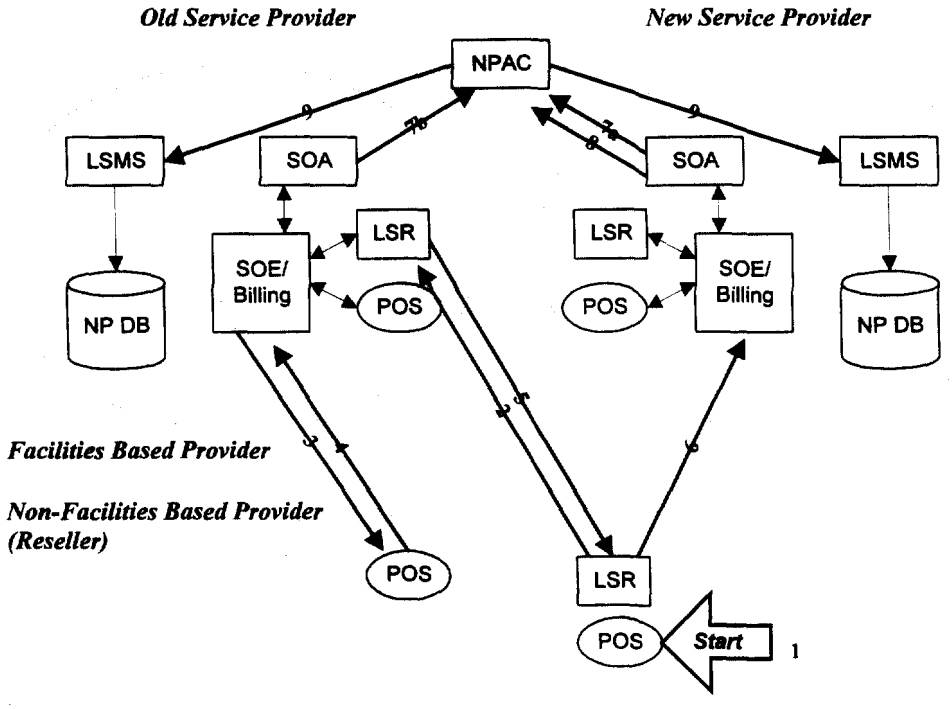

The steps are as follows:

1. The customer contacts the recipient service provider and agreement is reached to port the number. This may utilize the reseller's existing Point of Sale system.

2. The recipient service provider then initiates the LSR forms to the old service provider.

3. A confirming LSR is return to the new facility based provider.

4. The reseller then notifies their facility based provider that the port has been agreed to and that they should initiate the NPAC communication.

The remaining steps are as described in Section 4.2.1.