Zone A Offices (cont.)

STATE	CITY	CENTRAL OFFICE	CLLI CODE
FL	Miami	Grande	MIAMFLGR
		Palmetto	MIAMFLPL
		Alhambra	MIAMFLAE
		Bayshore	MIAMFLBA
		Metro	MIAMFLME
	Melbourne	Main	MLBRFLMA
	Orlando	Magnolia	ORLDFLMA
		Azalea Park	ORLDFLAP
		Sand Lake	ORLDFLSL
		Pinecastle	ORLDFLPC
		Pinehills	ORLDFLPH
	West Palm Beach	Annex (Main Annex)	WPBHFLAN
GA	Athens	Athens	ATHNGAMA
	Atlanta	Courtland St	ATLNGACS
		Peachtree Pl	ATLNGAPP
		Buckhead	ATLNGABU
		East Point	ATLNGAEP
		Toco Hills	ATLNGATH
		Sandy Springs	ATLNGASS
	Lilburn	Lilburn	LLBNGAMA
	Smyrna	Power Ferry	SMYRGAPF
		Smyrna Main	SMYRGAMA
	Tucker	Tucker Main	TUKRGAMA EX
	Roswell	Roswell Main	RSWLGAMA
	Norcross	Norcross Main	NRCRGAMA
	Marietta	Marietta Main	MRRTGAMA
	Dunwoody	Dunwoody Main	DNWDGAMA
	Alpharetta	Alpharetta Main	ALPRGAMA
	Columbus	Columbus Main	CLMBGAMT
KY	Louisville	Armory Place	LSVLKYAP EX
		Westport Rd	LSVLKYWE EX
		Beechmont	LSVLKYBE
		Bardstown Road	LSVLKYBR EX
		Fern Creeek	LSVLKYFC
		JTown	LSVLKYJT
		Mathews	LSVLKYSM
		Third Street	LSVLKYTS

Zone A Offices (cont.)

STATE	CITY	OFFICE	CLLI CODE / STATUS
LA	New Orleans	Main	NWORLAMA
	Baton Rouge	Main	BTRGLAMA
MS	Hattiesburg	Hattiesburg Main	HTBGMSMA
	Jackson	Cap Pearl	JCSNMSCP
	Vicksburg	Vicksburg	VCBGMSMA
NC	Cary	Central	NARYNCCE
	Chapel Hill	Rosemary	CPHLNCRO
	Charlotte	Caldwell	CHRLNCCA
		South Boulevard	CHRLNCB0
	Charlotte	Derita	CHRLNCDE
		Erwin	CHRLNCER
		Lake Point	CHRLNCLP
		Reid	CHRLNCRE EX
		Sharon Amity	CHRLNCSH
		University	CHRLNCUN EX
	Greensboro	Eugene St	GNBONCEU
	Raleigh	Morgan	RLGHNCMO
		New Hope	RLGHNCHO
	Salisbury	Main	SLBRNCMA
	Winston Salem	Fifth Street	WNSLNCFI
	Ashville	O'Henry	AHVLNCOH
SC	Charleston	Dial & Toll	CHTNSCDT
	Columbia	Senate St	CLMASCSN EX
		At. Andrews	CLMASCSA
	Greenville	D&T	GNVLSCDT
		Woodruff Road	GNVLSCWR EX
	Spartenburg	Main	SPBGSCMA
TN	Knoxvill	Main	KNVLTNMA
	Memphis	Bartlett	MMPHTNBA
		Chickasaw	MMPHTNCT
		Eastland	MMPHTNEL
		Germantown	MMPHTNGT
		Main	MMPHTNMA EX
		Oakville	MMPHTNOA
		Southland	MMPHTNSL

Zone A Offices (cont.)

STATE	CITY	CENTRAL OFFICE	CLLI CODE
	Nashville	Main & Toll	NSVLTNMT
		Airport	NSVLTNAP
		Brentwood	NSVLTNBW
		Crieve Hall	NSVLTNCH
		Donelson	NSVLTNDO
		Inglewood	NSVLTNIN
		Sharondale	NSVLTNST
		University	NSVLTNUN

BellSouth Physical Collocation
Central Office Exemptions

State	City	Central Office	CLLI
Alabama	Birmingham	Five Points South	BRHMALFS
		Main and Toll	BRHMALMT
		Riverchase	BRHMALRC
	Huntsville	Redstone Arsenal	HNVLALMA
Florida	Chipley	Jackson	CHPLFLJA
	Gainesville	Main	GSVLFLMA
	Jacksonville	Mandarin Avenues	MNDRFLAV
		San Jose	JCVLFLSJ
		South Point (JT Butler)	JCVLFLJT
	Jupiter	Main	JPTRFLMA
	Lake Mary	Main (Heathrow)	LKMRFLMA
	Lynn Haven	Ohio Avenue	LYHNFLOH
	North Dade	Golden Glades	NDADFLGG
	Pensacola	Ferry Pass	PNSCFLFP
	West Palm Beach	Gardens	WPBHFLGR
		Royal Palm	WPBHFLRP
Georgia	Austell	Main	ASTLGAMA
	Tucker	Main	TUKRGAMA
Kentucky	Louisville	Armory Place	LSVLKYAP
		Bardstown Road	LSVLKYBR
		Westport Road	LSVLKYWE
	Paducah	Main	PDCHKYMA
North Carolina	Charlotte	Reid Road	CHRLNCRE
		Research Drive (Univ.)	CHRLNCUN
	Greensboro	Airport	GNBONCAP
	Pembroke	Central	PMBRNCCE
South Carolina	Columbia	Senate Street	CLMASCSN
	Greenville	Woodruff Road	GNVLSCWR
Tennessee	Memphis	Main	MMPHTNMA
		Midtown	MMPHTNMT
		Southside	MMPHTNST

F. DISTRIBUTION CHANNELS

Although collocation is not a promotional item, a number of resources are required to support the service. Interconnections Services is the sales channel for negotiating physical collocation. Two negotiators from Interconnection Services - Pricing are assigned to negotiate physical collocation contracts. Each account team will designate a collocation coordinator. In addition, each state has a dedicated INAC contact to manage state-specific installations. To date, following are the sales channel resource requirements:

- CAP/OLEC Account Team: 1 PG 58 and 1 PG 56
- MCI Account Team: 1 PG 58
- AT&T Account Team 1 PG 58
- Sprint Account Team ½ PG 58
- Wireless Account Team ½ PG 58

The Application and Firm Order processes require a large amount of coordination. Currently the distribution system for these two processes is purely manual, though efforts are underway to mechanize them. The cost to mechanize the application process has been bid for approximately $100,000 to $120,000. Service orders for the collocation arrangement are processed through the ICSC.

G. SALES CODES

Unique sales codes are not required.

H. PRODUCT TRACKING NEEDS

Collocation is tracked at the cross-connect level on a per wire center or per customer basis.

I. ARRANGEMENT TYPE: CONTRACT / TARIFF

BellSouth will offer physical collocation on a negotiated basis only for the present time. Contract negotiation and contract administration expenses are not currently recovered with the existing rate structure.

J. ADVERTISING AND PROMOTION

BellSouth will be developing a "fact sheet" type brochure to include all interconnection and unbundled offerings. The projected costs of these items is approximately $10,000 annually.

K. CUSTOMER TRAINING

BellSouth will provide high level overview training on all Local Interconnection and Unbundled elements at four OLEC conferences scheduled for 1997. Specific OLEC customer training will be document based and will contain the following information: General product overview; ordering procedures and requirements; technical requirements; interface specifications; maintenance and repair procedures. Training development will require 10-20 person days for a PG 58. Face to face delivery will be available on a negotiated basis.

II. NETWORK ARCHITECTURE

A. PHYSICAL NETWORK CONFIGURATION:

The schematic in Figure 3 depicts a generic layout of equipment and cross-connects (TIE carrier connections) between BellSouth and the collocator. The collocator will place their equipment within the designated space. At their election, the collocator furnishes and BellSouth installs fiber optic cable from the C.O. manhole up to the location where the collocation equipment is placed. The schematic below excludes the optional entrance fiber.

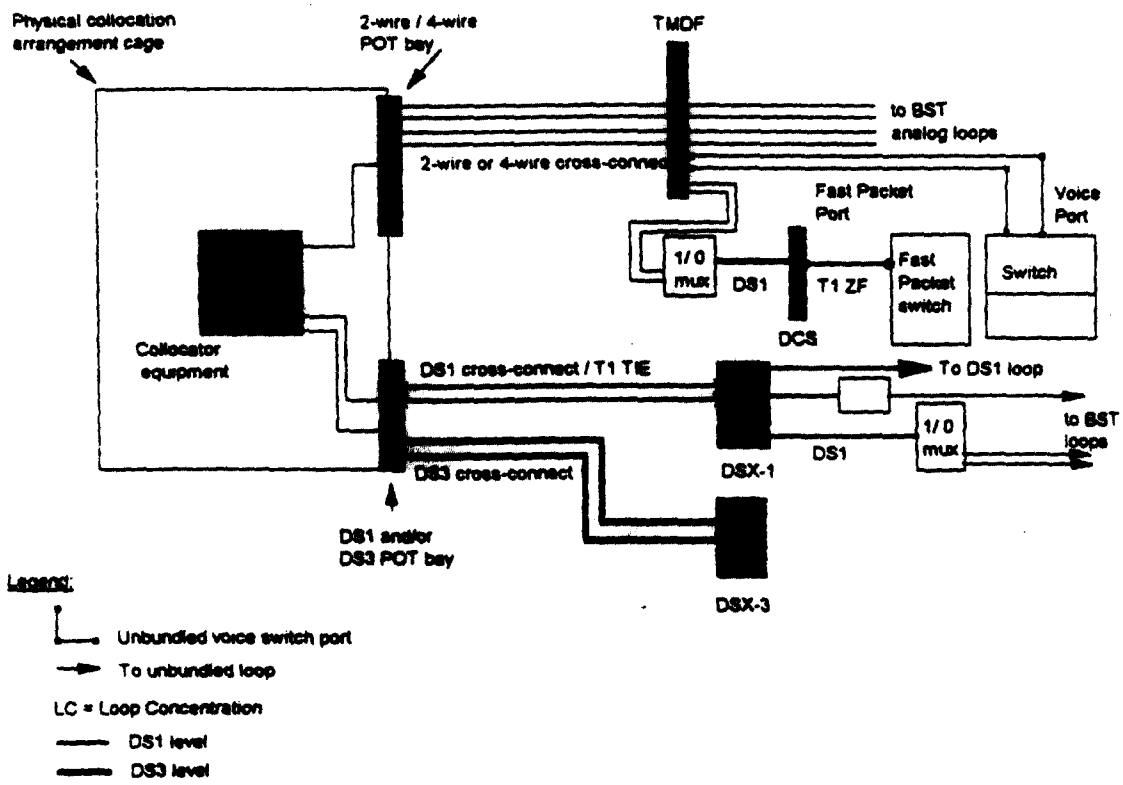

Figure 3

Description:

- The BellSouth provided POT bay is the demarcation point between the interconnector's network and BellSouth. (Some pre-existing contracts allow the interconnector to provide their own POT bay. In these cases, the POT bay must meet BellSouth specifications.)

- BellSouth will design and install TIE carrier systems between the POT bay(s) and existing MDF / TMDF, DSX-1, DSX-3 and/or LGX relay racks. See the DS1 cross-connect label above. BellSouth will use existing or new panels within those relay racks. In locations where no DSX-3 exists, BellSouth will use DCS 3/3 devices. It may be necessary to add new blocks to the TMDF for 2-wire and 4-wire cross-connects.

- The TIE carrier systems will become the actual cross-connect once service is ordered and interconnected to the collocation arrangement. The TIE systems will be inventoried in TIRKS prior to equipment turn-up to allow the collocator to specify POT bay port terminations.
- The collocator must make the connections between the POT bay and their equipment residing within the collocation space.

POT Bay Specifications:

Service level	Vendor	Model/description	Type block/panel	Rack / Dimensions
2-wire / 4-wire	Homaco or vendor of similar model	#50M-2700 • single sided • modified to accommodate two additional blocks on the lowest horizontal	66 MI-50 blocks	84"h x 351 ½"w x 13 ¾ "d
DS1	Lucent	DIXI-1 Digital Interconnect / Cross-connect Interface-1 System	DIXI-P23/6A1-84 interconnect panels with DIXI/4A1-4 four circuit connecting blocks	standard 7'-0" h x 23" w relay rack
DS3	Lucent	Digital Distributing Frame-Performance Module (DDF-PM)	DDF-1B600-32 / 4BNC interconnect panels equipped with modules	May be mounted in same rack as DS1 POT panels, standard 7'-0" h x 23" w
Fiber	C.O. standard	LGX type panel		

Table 1

Table 2 and Figure 4 following, depict the physical facility and the TIE carrier naming convention associated with each cross-connect level. This facility and naming convention represent the actual interconnection between the POT bay and the BST equipment.

Service level	Physical facility	FACILITY NAME
2-wire (DS0)	2-wire copper tie pair	T0TIE
4-wire (DS0)	Two 2-wire copper tie pairs (two 2-wire cross-connects made at TMDF)	T0TIE
DS0 equivalent (2-wire or 4-wire)	4-wire copper tie pairs (BellSouth DS1 as a T1TIE)	T1TIE
DS1	4-wire copper tie pairs	T1TIE
DS3	2-tube coaxial cables	T3TIE
Optical	single mode fiber jumpers	No carrier record, use manual wiring process in CO.

Table 2

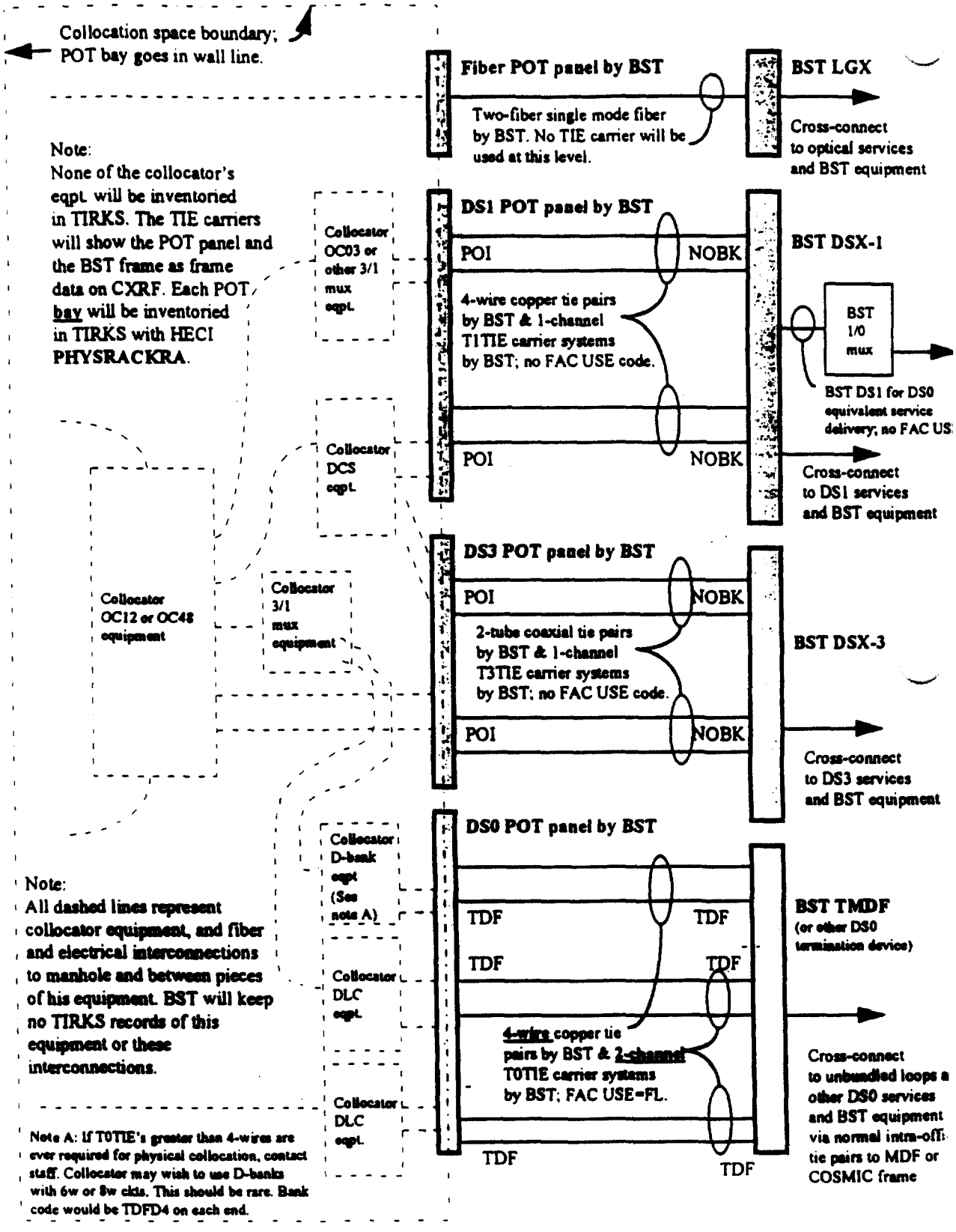

Figure 4
Typical Physical Collocation Schematic

B. OPERATIONAL SUPPORT SYSTEMS REQUIREMENTS

The following systems are utilized by the ordering and provisioning of collocation:

- EXACT: Service Representative front end system to manually load Access Service Requests or Local Service Requests. A mechanized interface for customer input is under development
- SOCS: Service Order Control System is the vehicle which distributes the service order to all down stream users once the Service Representative releases the order.
- SOAC: The interface between SOCS and TIRKS allows the mechanical or manual input of designed service requests into the Trunk Integrated Record Keeping System (TIRKS)
- TIRKS: an inventory and engineering design system, TIRKS is used to inventory the TIE connections between the BellSouth equipment and the POT bay. It is logs service requests on a per order basis and facilitates the engineering design and customer design documentation (design layout record, DLR)
- FEPS/PWS
- WFA:
- [repair center systems]

III. PERFORMANCE STANDARDS / RELIABILITY

A. PERFORMANCE STANDARDS AND RELIABILITY

Specific performance standards apply only to the tariffed services which may interconnect to a collocation arrangement via a cross-connect. Interconnection via cross-connects must be at a minimum equal to the standards which BellSouth applies to itself.

B. DIVERSITY REQUIREMENTS

There are no requirements to provide diversity for either the fiber entrance facility or the cross-connects. However, BellSouth does allow more than one private entrance fiber to a collocation arrangement, provided entrance conduit space is available without construction. A specific level of diversity for this multiple entrance is not guaranteed. Intra-building diversity for riser cables is not offered.

C. PERFORMANCE MONITORING

Collocation performance monitoring is the responsibility of the collocator. Standards for performance monitoring of services which interconnect to the collocation arrangement will be driven by the particular service type and service specific requirements. BellSouth's obligation for monitoring ends at the POT bay.

D. SPECIAL CONSIDERATIONS

Service Installation Guarantees, Service Assurance Warranties, Credit for Service Outage and Billing Guarantees do not apply to collocation elements. These assurances may apply to the services which interconnect to collocation.

IV. OAM&P: ORDERING, ADMINISTRATIVE, MAINTENANCE, AND PROVISIONING

A. INTERVALS FOR INSTALLATION, REPAIR

Due to the unique nature of collocation installations, the interval for each request is negotiated with the customer on an individual case basis. Factors such as extensive building modifications or availability of vendor equipment may significantly impact some intervals. BellSouth does not have repair responsibilities for collocation equipment arrangements. Repair commitments for services terminating to a collocation arrangement will be made based on the type of service interconnected to the collocation arrangement.

B. DESCRIPTION OF CENTERS AFFECTED AND THEIR ROLES

Account Team (Coordinator)

- Works with customer to determine collocation needs and requirements
- Assists customer with technical specifications and equipment configurations
- Assists customer with completion of BellSouth's Application Inquiry and Bona Fide Firm Order documents.
- Distributes Applications/Firm Order documents to and coordinates responses from all Interdepartmental representatives
- Customer single point of contact on all installations for escalations, roadblock resolution and execution.

Interexchange Network Access Coordinator (INAC)

- Provides state specific coordination of inquiry and firm order responses
- Initiates and chairs planning meetings and customer meetings
- Network issues resolution / Area Collocation SME

PPSM

- Building floor space and rooftop assessment
- Building modification assessment
- Bid process and administration
- Project management of building modifications
- Space turnover and customer acceptance

OSPE - (EIS only)

- Manhole access coordination
- Master contractor coordination
- Entrance facility coordination
- Entrance conduit capacity assessment

B. DESCRIPTION OF CENTERS AFFECTED AND THEIR ROLES (cont.)

CPG

- TIE carrier system designs
- circuit/cross-connect engineering and design
- issue DLR's

CCM - Capacity Management

- facility capacity assessment
- TIE carrier system inventory
- DSX, TMDF, DCS, Switch equipment capacity management
- equipment procurement

CSCM

- space assessment and planning
- site related equipment and cable support engineering and specifications
- power capacity management

C.O. Operations

- integration of collocation arrangements
- C.O. security access

ACAC

- trouble receipt
- C.O. access with security escort

ICSC - Interexchange Customer Service Center

and

LCSC - Local Customer Service Center

- Order receipt and processing
- Customer billing

C. ORDERING STANDARDS AND ORDER RECEPTION STANDARDS

Collocation equipment arrangements are ordered via the BSTEI document series which contain an Application Inquiry document, 3ona Fide Firm Order document and response documents for BellSouth interdepartmental feedback. Forms are submitted by the customer via FAX to the Account Team Collocation Coordinator. The coordinator then distributes the forms to interdepartmental representatives for review and response to the office(s) requested. The ICSC establishes billing accounts and issues services orders to bill for elements directly associated with the collocated equipment arrangement (i.e. application fee, space preparation fee, floor space, power, etc.)

Services which terminate in a collocation arrangement will use OBF Access Service Request standards and/or Local Service Request standards. Depending on the service type requested, the LCSC or ICSC will receive and process orders for unbundled elements or access orders, respectively. Cross-connect elements will be ordered on the same ASR/LSR as the service being interconnected. For end user services, the service center which would normally process the request will receive and process customer orders. The interconnector must strive to meet BellSouth's mechanized order interface standards. At a minimum and in the short term, all orders (ASRs / LSRs) must be complete and accurate before BellSouth will initiate the provisioning process.

D. REPAIR STANDARDS AND REPAIR ORDER RECEPTION

Repair will be handled by the center in control of the service terminating in the arrangement. Currently, the ACAC handles all collocation associated repair/trouble calls. Procedures for collocation related repair are parallel to special access repair receipt procedures.

E. SERVICE MANAGEMENT

Does not apply to collocation

F. BILLING AND SPECIAL ARRANGEMENTS

- Collocation rate elements currently bill out of CABS.
- Customer specific pricing capability must be developed (estimate TBD)
- Initiating CRIS billing capabilities will require headcount for the following:
  - CRIS service order standards - .30 person-year
  - CRIS IT - based on estimates from programmers
  - CRIS rate file - .10 person year

G. INTERNAL TRAINING REQUIREMENTS

Initial training for Interconnection IXC, CAP, ALEC and Wireless Sales teams was accomplished in November 1996. Rollouts to Network for major metros impacted by collocation will occur on an as needed basis. Interdepartmental process documentation is being distributed. Additional interdepartmental training is not anticipated.

H. STAFF SUPPORT REQUIREMENTS

	PG	1996	1997	1998	1999
Product	59	.1	.3	.1	.1
Managers	58		1	1	1
Project Manager	59	1	1	1	1
Project	59	6 x (.3)	6 x .3	6 x .3	6 x .3
Team	58	6 x (.2)	6 x .2	6 x .2	6 x .2

- Description:
  - 1 Product Manager and 1 Project Manager
  - 7 Network SMEs: Network core member, INAC, CSCM, CCM, CPG, C.O. Operations, ACAC .40 person-years each
  - 1 ICS SME
  - 1 Complex services SME (.30)
  - 1 Property Management SME .15 person hours
  - 2 Billing SMEs (depends on billing structure employed)
  - 1 Collocation Application process manager

- Ongoing support:
  - Product and Project management
  - Collocation application project management (can potentially be centralized to the ICS Project managers reporting to the ACAC)
  - Core Project team support

Latest update: 4-10-97. Forecast for collocation arrangements updated to reflect 1st quarter activity and additional customer feedback.

TAB 3

BellSouth Telecommunications

VIRTUAL COLLOCATION

Technical Service Description

Pam Tipton
Project Manager
Product Commercialization Unit
404 529-8751

Product Manager
To be determined

VIRTUAL COLLOCATION
TECHNICAL SERVICE DESCRIPTION

TABLE OF CONTENTS

Page

I. Market Service Description

A. Basic Service Features 3
B. Basic Service Capabilities 4
C. Pricing Structure 4

II. Network Architecture

A. Physical Network Configuration 6
B. Operational Support Systems Requirements 8

III. Performance Standards and Reliability

A. General Description 9
B. Diversity Requirements 9
C. Performance Monitoring 9
D. Special Considerations 9

IV. Ordering, Administrative, Maintenance, and Provisioning (OAM&P)

A. Intervals for Installation and Repair 10
B. Work Centers Affected 10
C. Ordering Standards 12
D. Repair Standards 12
E. Service Management 12
F. Billing and Special Arrangements 12
G. Internal Training Requirements 13
H. Staff Support Requirements 13

Virtual Collocation
Technical Service Description

I. Market Service Description

A. Basic Service Description

Virtual Expanded Interconnection Service (VEIS, or virtual collocation) is a tariffed service offering which provides for the placement of collocator-owned transmission facilities and equipment in BellSouth Central Offices and the interconnection of this equipment to BellSouth switched access, special access, and unbundled network element services. VEIS arrangements are most commonly located in the BST equipment line-up.

As part of the equipment installation, collocators will place a private fiber entrance facility from outside the central office to an interconnection point designated by BellSouth. The entrance facility will be pulled into the central office cable vault, spliced into collocator-provided fire-retardant riser cable and connected to the equipment arrangement within the central office. If multiple entry points are available and the collocator so desires, multiple entry points will be provided to the collocator for their fiber entrance facilities. Microwave facilities, in lieu of fiber facilities, may be used for interconnection where they may be reasonably provided.

In order to ensure the compatibility of the transmission capabilities of the facilities and equipment used in the provision of VEIS, equipment and facilities, including the entrance fiber, associated fire retardant riser cable, terminal transmission equipment, plug-ins/line cards, software, unique tools and test equipment, will be provided by the collocator. The collocator will also provide the cabling from the arrangement to the BST cross-connect point and power cabling from the arrangement to the BST provided power source. The collocator will contract directly with its chosen BellSouth certified vendor for engineering and installation activities for the arrangement. The collocator will lease to BellSouth all equipment and support components required to provision and maintain/repair VEIS on an ongoing basis for the nominal sum of one dollar ($1.00).

Performance monitoring, alarm monitoring and software cross-connect control of all collocator-owned/BellSouth-leased facilities and equipment are the responsibility of the VEIS collocator. BellSouth will perform all maintenance and repair on collocator equipment once notified by the collocator that such work is necessary. If a collocator has selected terminating transmission equipment hardware and/or software which is not currently in use in the BellSouth location where VEIS will be provided, the collocator is responsible for payment of tuition fees and employee time and travel expenses associated with any necessary training for BellSouth personnel to install and repair said equipment.

Space is available for VEIS in each BellSouth central office on a first come, first served basis. The Company's central office site designations are listed in the National Exchange Carrier Association (NECA) Tariff FCC No. 4. The first come, first served policy is determined based upon the order of receipt of applications for VEIS along with the Application Fee.

B. Basic Service Features

A virtual collocation arrangement allows a telecommunications service provider an efficient means for connection to BellSouth tariffed services, unbundled network elements, or to other collocated telecommunications service providers (on a negotiated basis only) through the purchase of BellSouth cross-connects. VEIS cross-connects provide a one to one dedicated transmission path between the interconnector's transmission equipment located in the Central Office and BellSouth's and/or another collocator's network at two-wire, four-wire, DS1 and DS3 levels.

Two-wire and four-wire cross-connects are for connection to BellSouth's unbundled voice loop, unbundled digital loop, dedicated DS0 services and unbundled port offerings, or for dedicated analog or digital transmission paths between the collocator and another collocated party. DS1 and DS3 cross-connects provide a 1.544 Mb or 44 Mb path, respectively, between the collocator and the following BellSouth services: tariffed DS1 and DS3 local channel or interoffice transport offerings (e.g., SPA DS1/DS3, SPA DS1/DS3 Shared Ring, SWA DS1, SWA DS3, SWA Dedicated Transport), central office channelization, Dedicated Ring central office node interfaces, SPA Customer Reconfiguration and unbundled digital (DS1) loops.

C. Pricing Structure

BellSouth assesses both non-recurring and recurring charges for virtual collocation. Following is a description of each rate element, including an NRC indicator for non-recurring and/or RC or recurring.

Application Fee - NRC

The Application Fee covers the engineering and administrative expense associated with reviewing, processing and responding to the initial application inquiry. Associated with the review are design and planning activities which include an engineering record search for conduit, rack and floor space availability, and a determination of requirements for the requested VEIS design. When an application is received for VEIS, the Account Team coordinator reviews the application for completeness and forwards the application inquiry to the following respondees for processing:

Department	Function	Pay Grade
Account Team Collocation Coordinator	Customer interface, application support and coordination	58
Interexchange Network Access Coordinator (INAC)	State coordinator	58
Outside Plant Engineering (OSPE)	Cable entrance assessment	58
Circuit Capacity Management (CCM)	Facility and equipment capacity /growth needs	58
Common Systems Capacity Management (CSCM)	Space planning / Equipment compatibility, cable support	58
Central Office Operations	Facility, equipment, space Operations review	58

Application Fee (cont.)
The fee is a one time charge required with each VEIS arrangement application submitted per location. An additional application fee is not required for updates amendments or supplements to service requests in progress. A subsequent request by the same customer in the same C.O. will be treated as "new" if the initial request has completed. Fees are received by the Account Team coordinator and forwarded to the ICSC or PRO-CABS for processing.

Cable Installation Charge - NRC

The Cable Installation Charge applies for each VEIS fiber entrance cable ordered installed to an arrangement. Cable installation involves activities associated with arranging the manhole punch-through, pulling the collocator-provided/BellSouth leased fiber cable from the interconnection point to the central office cable vault, installing collocator-provided/BellSouth-leased fire retardant riser cable, and splicing the entrance fiber cable to the riser cable.

Cable Support Structure - RC

This component recovers the use and maintenance of the duct from the point of interconnection to the central office cable vault and for riser and overhead racking structure. The charge applies per private fiber entrance cable installed.

Floor Space - RC

The VEIS Floor Space component consists of two recurring rate elements: Per square foot and Per ampere (i.e. power). The Per square foot element applies for the floor space required to provision the VEIS arrangement and includes heat, ventilation and air conditioning (HVAC), lighting and AC power. The Per Ampere element consists of two -48 volt direct current feeds (A & B) with battery back-up and applies per ampere for the equipment maximum power requirement per manufacturer's specifications.

Cross-connect - NRC and RC

The cross-connect element is designated as Switched access or Dedicated Access depending on the type of service to which it connects. The physical cabling between the collocation arrangement and the cross-connect panel is complete by the collocator's certified vendor. The monthly recurring charge for cross-connects consists of the cross-connect panel, cable racks between the collocation arrangement and cross-connect panel, bay framework and other supporting hardware. Non-recurring charges are assessed on a "First" and "Additional" basis.

Training - ICB

When collocator-provided training is required as described in section I.A., preceding, the collocator must compensate BellSouth for employee living expenses per day, air fare/travel expenses per trip and labor rate each half-hour for Basic, Overtime and/or Premium time

Security Escort

A Security Escort is provided by BellSouth to a collocator whenever the collocator or approved agent desires access to the collocation arrangement. Charges for Security Escort are assessed in half-hour increments as either Basic, Premium or Overtime charges. A request resulting in the dispatch of a BellSouth employee at a time not consecutive with the employee's scheduled work period is subject to a minimum charge of three (3) hours.

II. Network Architecture

A. Physical Network Configuration

The schematic in Figure 1 depicts a generic arrangement with cross-connects to BellSouth's service offerings. The cross-connections to the DSX below are further delineated in figure 2 following, as TI and T3 TIE facilities.

Virtual Collocation

Private fiber is placed to the central office and pulled through to the collocation arrangement. The collocator places their equipment in leased floor space and purchases cross-connects to BellSouth's transport services. The wiring between the collocator equipment and the BST DSXs or TMDF is completed by the certified vendor. However, this represents the physical cross-connection between the two company's networks.

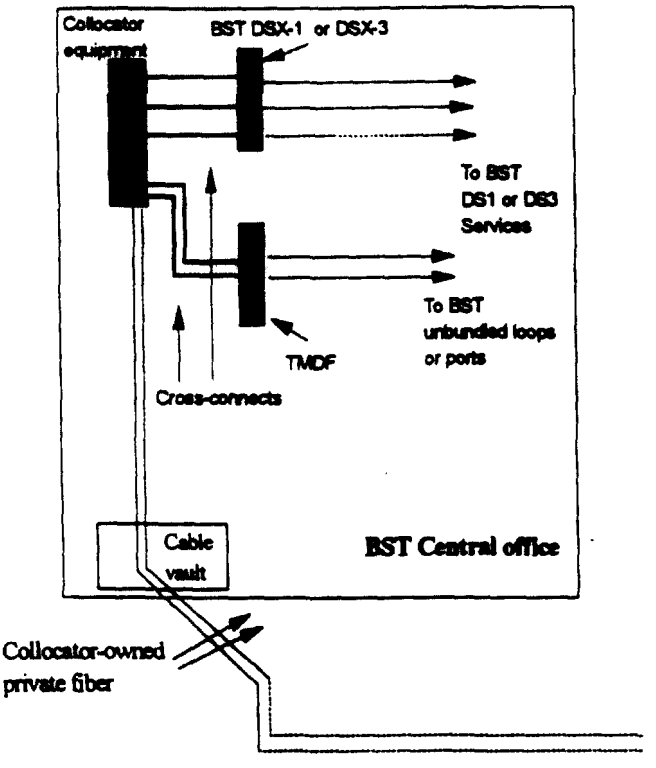

Table 1 and Figure 2 following, depict the physical facility and the TIE carrier naming convention associated with each cross-connect level. This facility and naming convention represent the actual interconnection between the collocator's equipment and the BST equipment.

Service level	Physical facility	FACILITY NAME
2-wire (DS0)	2-wire copper tie pair	T0TIE
4-wire (DS0)	Two 2-wire copper tie pairs (two 2-wire cross-connects made at TMDF)	T0TIE
DS0 equivalent (2-wire or 4-wire)	4-wire copper tie pairs (BellSouth DS1 as a T1TIE)	T1TIE
DS1	4-wire copper tie pairs	T1TIE
DS3	2-tube coaxial cables	T3TIE
Optical	single mode fiber jumpers	No carrier record, use manual wiring process in CO.

Figure 2 below provides a more detailed example of a collocator's equipment installation for DS1 and DS3 level services and demonstrates the physical connections between the collocator equipment and BellSouth's demarcation point. The dotted-line connections represent the cross-connects. (Two-wire or four-wire cross-connects would be labeled T0 TIE.) The collocator's vendor is responsible for the installation of F1 through F6, represented as A through C at the bottom of the diagram.

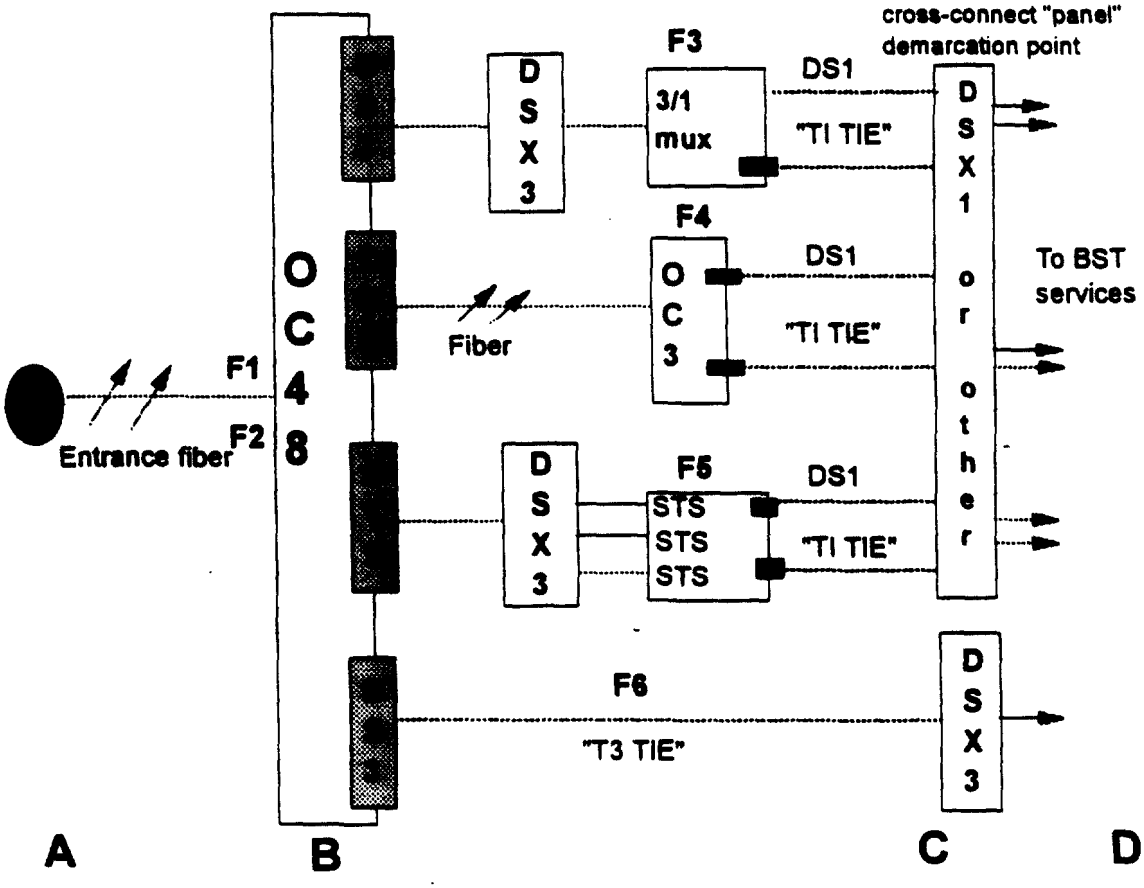

B. OPERATIONAL SUPPORT SYSTEMS REQUIREMENTS

The following systems are utilized by the ordering and provisioning of collocation:

- EXACT: Service Representative front end system to manually load Access Service Requests or Local Service Requests. A mechanized interface for customer input is under development
- SOCS: Service Order Control System is the vehicle which distributes the service order to all down stream users once the Service Representative releases the order.
- SOAC: The interface between SOCS and TIRKS allows the mechanical or manual input of designed service requests into the Trunk Integrated Record Keeping System (TIRKS)
- TIRKS: an inventory and engineering design system, TIRKS is used to inventory the TIE connections between the BellSouth equipment and the POT bay. It logs service requests on a per order basis and facilitates the engineering design and customer design documentation (design layout record, DLR)
- FEPS/PWS
- WFA:
- [repair center systems]

III. PERFORMANCE STANDARDS / RELIABILITY

A. PERFORMANCE STANDARDS AND RELIABILITY

Specific performance standards apply only to the tariffed services which may interconnect to a collocation arrangement via a cross-connect. Interconnection via cross-connects must be at a minimum equal to the standards which BellSouth applies to itself.

B. DIVERSITY REQUIREMENTS

There are no requirements to provide diversity for either the fiber entrance facility or the cross-connects. However, BellSouth does allow more than one private entrance fiber to a collocation arrangement, provided entrance conduit space is available without construction. A specific level of diversity for this multiple entrance is not guaranteed. Intra-building diversity for riser cables is not offered.

C. PERFORMANCE MONITORING

Collocation performance monitoring is the responsibility of the collocator. Standards for performance monitoring of services which interconnect to the collocation arrangement will be driven by the particular service type and service specific requirements. BellSouth's obligation for monitoring ends at the cross-connect panel demarcation point.

D. SPECIAL CONSIDERATIONS

Service Installation Guarantees, Service Assurance Warranties, Credit for Service Outage and Billing Guarantees do not apply to collocation elements. These assurances may apply to the services which interconnect to collocation.