MCI Telecommunications Corporation
1801 Pennsylvania Avenue, NW
Room 418
Washington, DC 20006
202 887 2992
FAX 202 887 2772

Lisa B. Smith
Senior Policy Counsel
Local Markets and Enforcement

EX PARTE OR LATE FILED

ORIGINAL

July 30, 1998

EX PARTE

Magalie Roman Salas
Secretary
Federal Communications Commission
1919 M Street, N.W. Room 222
Washington, D.C. 20554

Re: SBC Petition for Relief from Regulation Pursuant to Section 706 of the Telecommunications Act and 47 U.S.C. Section 160 for ADSL Infrastructure and Service (CC Docket No. 98-91); Association for Local Telecommunications Carriers Petition for Declaratory Ruling Section 706 (CC Docket No. 98-78); Petition of APT Requesting Issuance of Notice of Inquiry and NPRM to Implement Section 706 (RM-9244, CCB/CPD 98-15); Petition of Bell Atlantic Corp. for Relief from Barriers to Deployment of Advanced Telecommunications Services (CC Docket No. 98-11); Petition of Ameritech Corp. for Relief from Barriers to Deployment of Advanced Telecommunications Services (CC Docket No. 98-32); Petition of US West Communications Inc. for Relief from Barriers to Deployment of Advanced Telecommunications Services (CC Docket No. 98-26)

Dear Ms. Salas:

On July 30, 1998, Jack Wimmer, Kevin Sievert and Glen Grochowski and I met with Robert Pepper, Dale Hatfield, Stagg Newman and Jonathan Askin to technical issues raised by the Commission's separate subsidiary proposal for affiliated ILECs and the safeguards that would have to be addressed in order to ensure non-discriminatory behavior.

In accordance with Section 1.1206(b)(2) of the Commission's Rules, an original and one copy of this notice are being submitted to the Secretary.

Sincerely,

Lisa B. Smith
Senior Policy Counsel

cc: Robert Pepper
Dale Hatfield
Stagg Newman
Jonathan Askin

0+11

MCI

Discussion on 706 Issues

July 30, 1998

Agenda

- Colocation Issues
- Unbundling and Resale
- Spectrum Management
- Leveling the Playing Field

MCI

Issues with Current Colocation Practice

Colocation Cage Existing 400 Sq. Ft. Limitation Artificially Caps Market Penetration

- Services to be offered:
  - Narrowband (POTS, BRI)
  - Unbundled DS1s and DS3s
  - xDSL Services
- 50 bays/cage is a reasonable fit
  - 10 bays of power, monitor and control
  - 40 bays of voice and data
- Based on current densities, that is approximately 27,200 voice and data lines
- Conclusion:
  - With a 20 % penetration MCI cannot fully capitalize on Central Offices larger than 136K lines. In Dallas, MCI cannot take full advantage of 5 out of 13 Central Offices.
  - CLEC should have right to negotiate floor space requirements.
  - Colocation restrictions should not limit market share.

Colocation Options

- 400 Sq. Ft. Cage or ~35 racks assumed

Cost Element	*Caged Physical Colo*	Cageless Physical Colo	*Virtual Colo*	No Colo
Space NRC	$110K	$99K	$73K	[illegible]
Space RC	$7.2K / mo	$6.8K / mo	$4.2K / mo	[illegible] / mo

Notes:

- Rates based on FCC tariffs.
- Caged colo is current CLEC method with wire cage & 100 sq ft space increments.
- Cageless colo removes wire cage and 100 sq ft increment requirement, which allows for better space usage efficiency by 10%.
- Virtual colo replaces dedicated space with leased individual C.O. rackspace and C.O. engineering charges. RC costs do not reflect maintenance charges.
- No colo removes dedicated space and equipment requirement and replaces with CLEC provided loop concentration and handoff equipment. No pricing models exist.

CLEC Colocation Options

- Caged Physical Colocation:
- Colocation of CLEC electronics in dedicated space within ILEC C.O. with wire cage demarcation with specific facility handoff
  - Problems with this as the only option:
    - High initial cost
    - Does not address sub-loop access
    - Long construction lead-time
    - Lack of upfront and incremental space
    - Restrictive on allowable equipment types
    - Minimum space requirement and increment of 100 sq. ft.
    - Cost-effective only for large C.O.s with high customer penetrations
  - Benefits
    - Security of CLEC equipment and customers
    - Multiple customer service options not linked to ILEC offerings
  - Costs:
    - Average nationwide of $110K NRC, $7.2K RC
    - Costs dominated by space buildout charges

CLEC Colocation Options

- Virtual Colocation
- Colocation of CLEC electronics in space within ILEC C.O. with ownership, operations, and maintenance transferred to ILEC
  - Problems with this option:
    - Restrictive ILEC maintenance and support issues
    - Restrictive on allowable equipment types
    - Does not address sub-loop access
    - Limitation on MCI access to equipment
    - Subject to ILEC prioritization for OAM&P
  - Benefits
    - No requirement for contiguous or caged space allocations in ILEC C.O.
    - No CLEC staffing requirements for colocation equipment maintenance
    - Cost beneficial in smaller central offices with medium customer penetrations
  - Costs:
    - Average nationwide of $73 K NRC, $4.2 K RC
    - Costs dominated by ILEC engineering & P.M. charges. RC may be offset by ILEC maintenance charges.
    - Savings of 33% over caged colocation due to no space buildout charges

Desired CLEC Colocation Options

- Cageless Physical Colocation
- Colocation of CLEC electronics in dedicated space within ILEC C.O. without any space demarcation and with specific facility handoffs (requires full legal definition and implementation)
  - Problems with this option:
    - High initial cost
    - Construction lead-time
    - Does not address sub-loop access
    - Lack of upfront and incremental space
    - Restrictive on allowable equipment types
    - Cost-effective for large and medium C.O.s with high customer penetrations
  - Benefits
    - Maintains direct CLEC control of equipment and customers
    - Multiple customer service options not linked to ILEC offerings
    - No requirement for contiguous space or wire cages
  - Costs:
    - Similar to caged colocations; however, space modularity and cage elimination saves 10 15% of space & associated charges. Avg nationwide cost of $89K NRC, $6.8K RC.
    - Costs still dominated by space buildout charges

Desired CLEC Colocation Options

- No Colocation
- No CLEC electronics are placed in ILEC central office. ILEC provides loop concentration, transmission, and traffic handoff service to CLEC
  - Problems with this as an option:
    - Service options restricted to ILEC offerings only
    - Potential maintenance and provisioning support issues
    - Technical limitations of concentration equipment today
    - Connectivity and UNE combination requires sub-loop unbundling
  - Benefits
    - Best potential to address sub-loop access
    - ILEC concentrates traffic for efficient handoff to CLEC
    - No requirement to buildout space in ILEC C.O.
    - No CLEC staffing requirements for colocation equipment maintenance
    - Cost-effective for various C.O. sizes and customer penetrations
  - Costs:
    - Not defined or tariffed
    - Costs dominated by loop combination, concentration, and transport charges
    - Expected to have least expensive initial NRC for market entry

Unbundling and Resale

Sub-Loop Unbundling

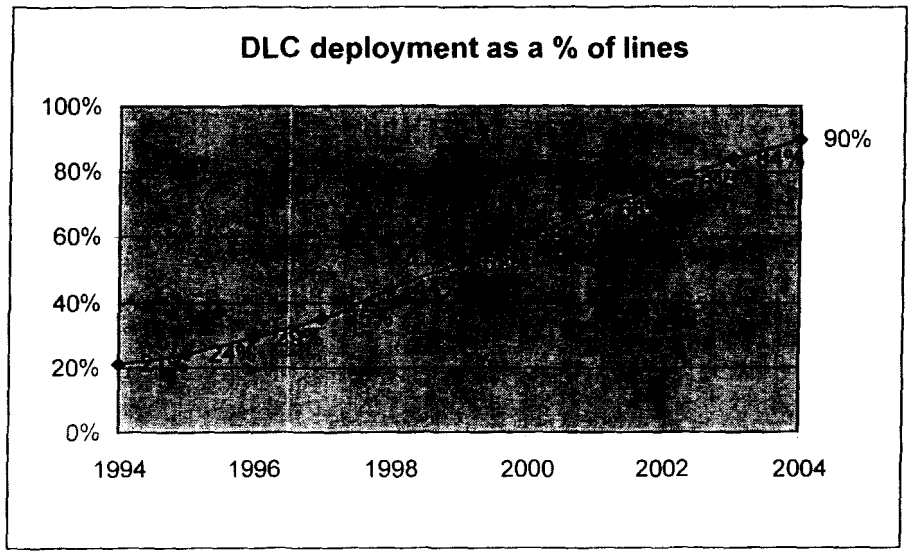

Source: Deloitte & Touche convergence data & telecom, May 1997

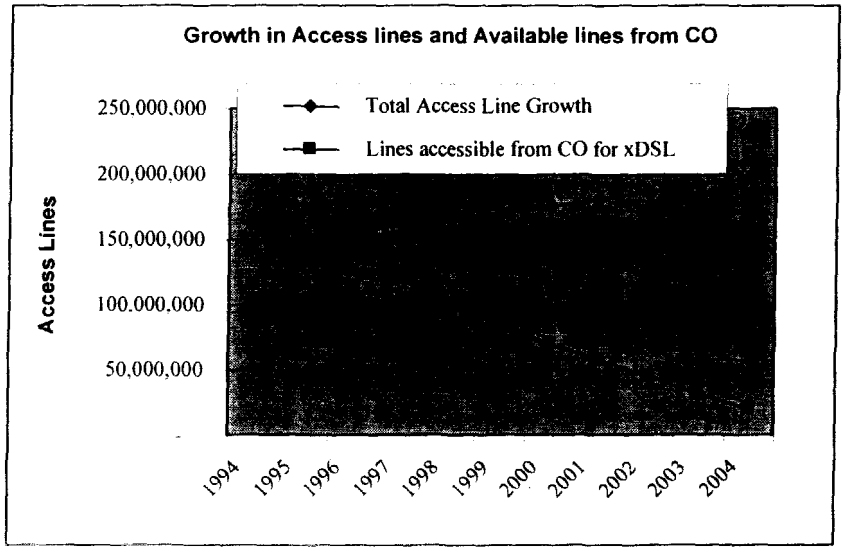

- ILEC Digital Loop Carrier (DLC) deployment limits CLEC access to copper loops.
- By year 2004, of the total 195M loops, about 175M lines will be served by DLC.
- By year 2004, only 20M access lines will be available to CLEC.

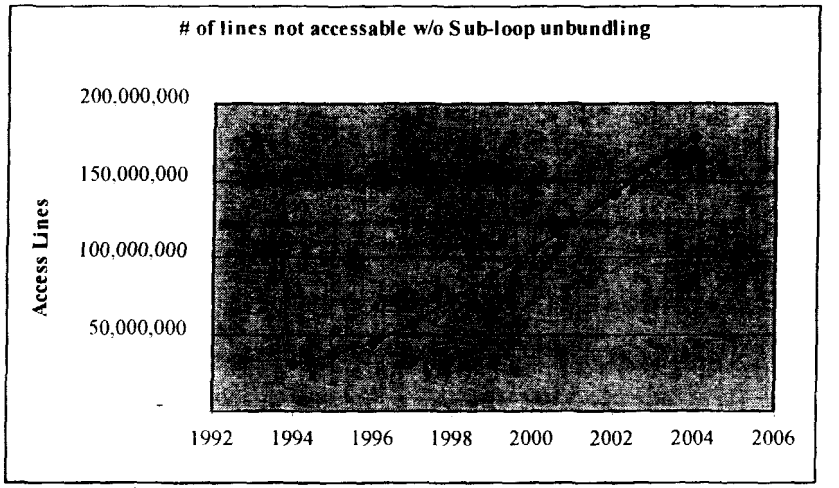

Without Sub-loop unbundling, CLEC can only access 10% of lines by 2004.

Required Elements for Sub-Loop Unbundling

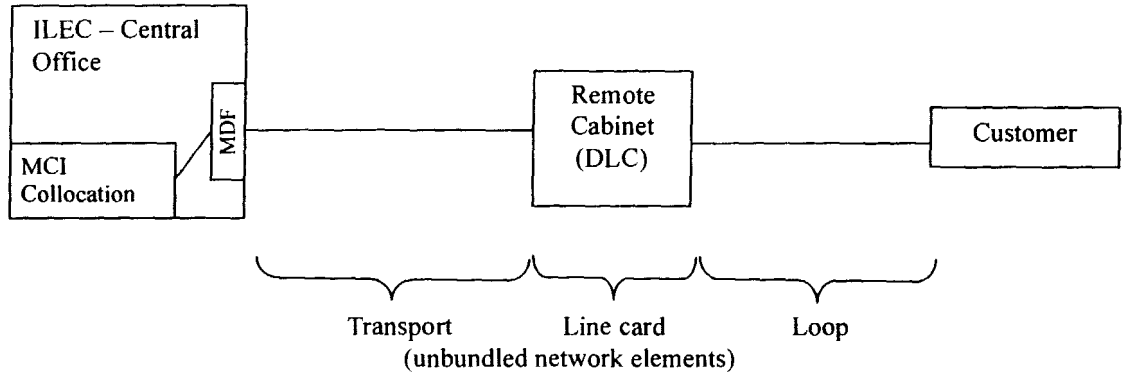

Unbundled Elements

- Wire center to remote cabinet transport
- Remote cabinet line card
- Copper loop to customer

Unbundled ADSL Facilities

Customers Can Pick POTS and Data Providers

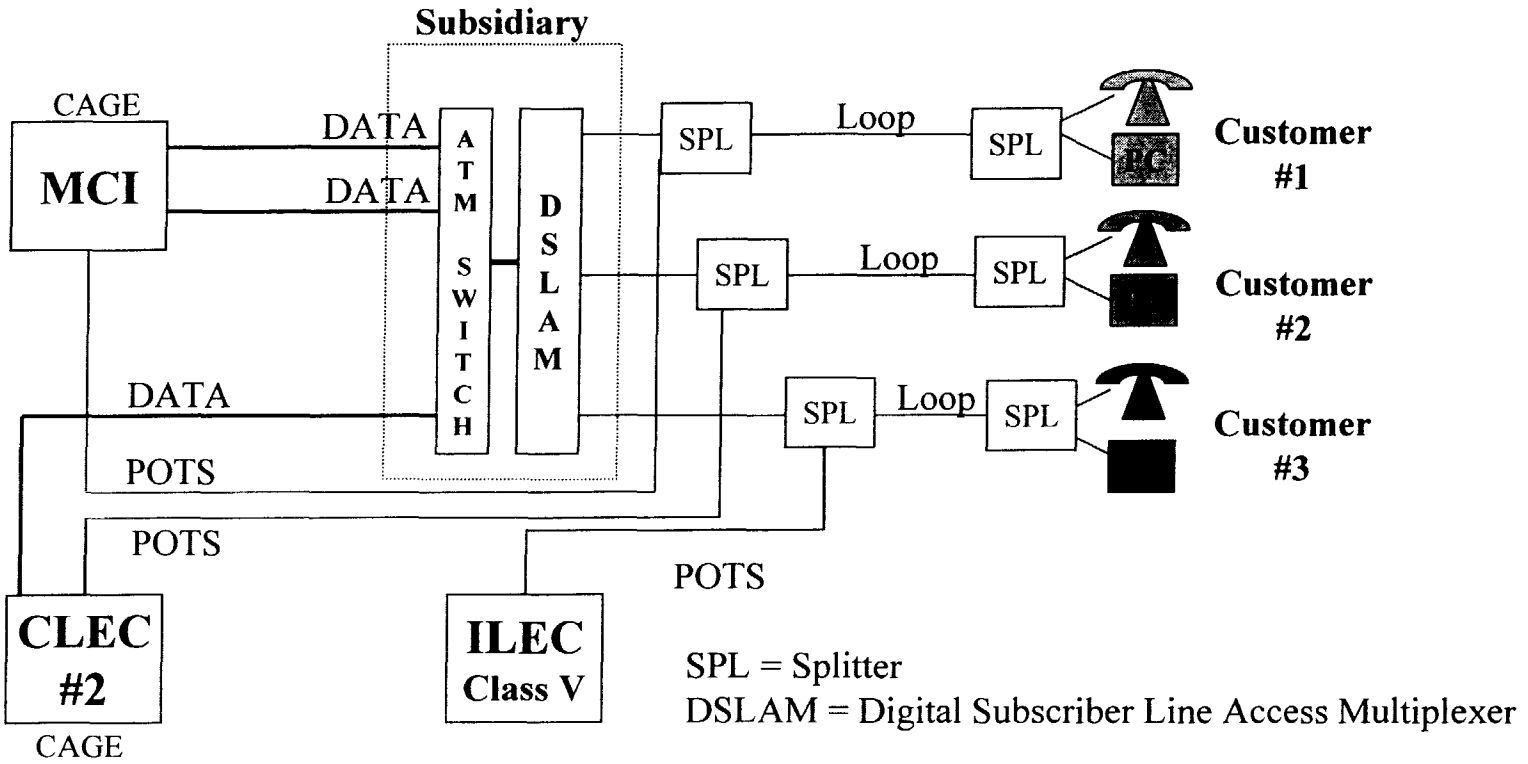

- Customer #1 picks MCI for POTS, and CLEC #2 for Data
- Customer #2 picks CLEC #2 for POTS and Data
- Customer #3 picks ILEC for POTS, and MCI for Data

BOC packetized voice services prohibited under 271, cannot be policed.

MCI

Requirement for Resale

- Facilities-based competition will take time to develop. Resale is method of establishing competition in the interim.
- Resale of 'bottleneck' facilities mandated by Telecom Act of 1996. xDSL electronics and loop qualifies as a bottleneck in broadband data network.
- Demand, volume, and revenue created with resale will spur CLEC facility construction.
- For xDSL, resale will fill out serving areas of CLECs who cannot build facilities due to:
    - lack of ILEC C.O. colocation space
    - unavailability of sub-loop access to customers served via DLC
    - unjustified initial costs of building out to small or rural C.O.s
    - low or no customer base to market services.
- Resale promotes ubiquitous competing service offerings, as opposed to a patchwork of CLEC xDSL coverage.
- Resale will lower ILEC investment risk as numerous service providers can pay for ILEC xDSL infrastructure by providing a larger market.

Spectrum Management

Copper Network Spectrum Management
Today's Environment

- Crosstalk properties well know by ILECs, CLECs, Manufacturers, and Independent Laboratories (< 1 MHz) (T1, HDSL, ADSL)
- All of the above groups are also currently studying > 1 MHz spectral properties (VDSL)
- Historically, service providers through the standards process "police" network equipment specifications to maximize performance and minimize network impact issues, such as, crosstalk interference
- Additionally, the service providers deploy standards based equipment into the network to maintain network integrity

Copper Network Spectrum Management
Requirements for Parity

- Industry defined deployment guidelines / specifications
  - Power Spectral Density, Transmitted signal power, Peak output voltage, etc
- Non-discriminatory access to OSP plant records, customer/loop qualification systems, database of deployed services per cable pair or binder group
- Clear definition of binder or loop service assignment configurations
- Use of standards based equipment (Proprietary systems must be proven to not impact the network)
- Defined mechanism for dispute resolution

Copper Network Spectrum Management
Recommendations

- FCC to encourage expedited development of national technology deployment guidelines
- Require the ILEC to develop support systems and provide non-discriminatory access to those systems
- Require the use of an independent 3rd party for Spectral Management to perform service and pair assignment and tracking
- Allow the service providers to continue to "police" technology development through the standards process

MCI

Leveling the Playing Field for an RBOC DSL Subsidiary

Solutions to Improve ILEC & CLEC xDSL Service Parity

- Service Deployment Solutions:
  - Allow non-discrimatory access to loop assignment, colocation space, and availability resolution to all service providers
  - Provide access to all network elements encompassing loop plant, remote DLC, and DLC to C.O. transport. Provide colocation options in remote facilities.
  - Implement alternative colocation options for CLECs that better match their business plan(s). Choices from the following should be available:
    - caged physical colocation
    - cageless physical colocation
    - virtual colocation
    - no colocation (unbundled elements)
  - Require 3rd party company for pair assignment and service tracking for spectrum management and colocation space
  - Provide non-discriminatory electronic access to CLECs for all ILEC loop data, including length, configuration, presence of DLC or 'pair gain' systems, etc.
  - Require ILEC support for CLEC traffic concentration and handoff, including voiceband (w / GR-303), private line (w / DCS), and broadband data (w / ATM and/or IP)

Solutions to Improve ILEC & CLEC xDSL Service Parity

- Service Offering Cost Solutions:*
  - ILEC subsidiary must have a cost structure in parity with CLECs to install, maintain, and deliver xDSL equipment and services
  - Separation of unregulated ILEC data sub from telephony business with prohibition of cross subsidization
  - Interconnection 'contracts' between the ILEC data sub and the CLECs with the RBOC holding company must reflect the same pricing elements
  - National standard for colocation must be developed, including equipment options, application requirements, and forward-looking costs
  - Resale requirement on ILEC data sub will promote competitive broadband services

Key Premise: Pricing inputs for separate ILEC data subsidiary are irrelevant to ILEC holding company, but critical to CLEC.

OSS Requirements for a Level Playing Field

- Order Entry (ASR)
- Outside Plant Records
- Provisioning
- Electronic Bonding
- Reporting
- Remote Test Access
- Facility Monitoring
- Alarm Reporting
- Billing
- Standards
- Measurements
- Self-Executing Enforcement Mechanisms Are Required

Equipment Certification Testing and Approval Process

- Certification based on standards, not RBOC preference
  - NEBS
  - UL
  - ANSI
- Consistent entry script for both Physical and Virtual colocation.
- No restrictions on functionality of colocated equipment.

706 Issues
Key Points Summary

- Range of colocation options is required
- Industry standards based criteria for colocated equipment
- Resale required to ensure competitive environment
- Complete separation of broadband and local services for ILEC subsidiary
- Independent 3rd party for spectrum management
- Sub-loop unbundling