EX PARTE OR LATE FILED

SHER & BLACKWELL
ATTORNEYS AT LAW
SUITE 900
1850 M STREET, N.W.
WASHINGTON, D.C. 20036

TELEPHONE (202) 463-2500
FACSIMILE (202) 463-4950/4840

WRITER'S DIRECT DIAL NO.
(202) 463-2514

MARK W. ATWOOD
NATHAN J. BAYER
ROBERT J. BLACKWELL
JOHN W. BUTLER
CINDY G. BUYS
EARL W. COMSTOCK+
MARC J. FINK
R. FREDERIC FISHER*
JEFFREY F. LAWRENCE
ANNE E. MICKEY
PATRICK J. MITCHELL ◊
KELLY A. O'CONNOR
STEVEN Y. QUAN
WAYNE R. ROHDE
STANLEY O. SHER
DAVID F. SMITH

*ADMITTED IN CA ONLY
+ADMITTED IN AK ONLY
◊ADMITTED IN AZ ONLY

SUITE 1200
ONE EMBARCADERO CENTER
SAN FRANCISCO, CA 94111
TELEPHONE (415) 732-3797
FACSIMILE (415) 732-3796

SUITE 510
15 EXCHANGE PLACE
JERSEY CITY, NJ 07302
TELEPHONE (201) 915-0100
FACSIMILE (201) 915-0393

GOVERNMENT RELATIONS
JEFFREY R. PIKE

July 31, 1998

RECEIVED
JUL 31 1998
FEDERAL COMMUNICATIONS COMMISSION
OFFICE OF THE SECRETARY

BY HAND DELIVERY

Ms. Magalie R. Salas
Secretary
Federal Communications Commission
Room 222
1919 M Street, N.W.
Washington, D.C. 20554

Re: **Petitions of Bell Atlantic Corp., US West Communications, Inc. and Ameritech Corp. to Remove Barriers to Investment in Advanced Telecommunications Capability, CC Docket Nos. 98-11, 98-26, and 98-32**

Petition of the Alliance for Public Technology Requesting Issuance of Notice of Inquiry and Notice of Proposed Rulemaking to Implement Section 706 of the 1996 Telecommunications Act, RM No. 9244

Petition of the Association for Local Telecommunications Services for Declaratory Ruling Regarding Section 706, CC Docket No. 98-78

Southwestern Bell Telephone Company, Pacific Bell, and Nevada Bell Petition for Relief from Regulation Pursuant to Section 706 of the Telecommunications Act of 1996 and 47 U.S.C. § 160 for ADSL Infrastructure and Service, CC Docket No. 98-91

Dear Ms. Salas:

Yesterday, Riley Murphy and Charles Kallenbach of e.spire Communications, Inc., and Earl Comstock of Sher & Blackwell met with Paul Misener, Senior Legal Advisor to Commissioner Harold Furchgott-Roth. The purpose of the meeting was to discuss the legal, economic, and competitive impacts of the separate affiliate and regulatory relief proposals that the Commission may be considering in response to the above named petitions. A written presentation of e.spire's position was provided to Mr. Misener, and a copy of the presentation is enclosed with this notice.

I have hereby submitted twelve copies of this notice to the Secretary, as required by the Commission's rules. Please return a date-stamped copy of this notice (copy provided).

Please contact the undersigned if you have any questions.

Respectfully submitted,

Earl Comstock /pr

Earl Comstock
Sher & Blackwell
Counsel for e.spire Communications, Inc.

Enclosure

cc: Paul Misener

Ex Parte Presentation

Association for Local Telecommunications Services
Petition for Declaratory Ruling Regarding
Section 706
CC Docket No. 98-78

Riley Murphy
Executive Vice President and General Counsel

Charles Kallenbach
Vice President, Regulatory Affairs

Earl Comstock
Sher & Blackwell

e·spire™

July 30, 1998

e.spire Communications, Inc.

- Formerly known as ACSI, *e.spire* is a CLEC that provides integrated local voice and data communications services in mid-sized metropolitan markets in the southern and southwestern United States.
- *e.spire's* business strategy is based on supplying customers with advanced telecommunications services through its digital SONET-based fiber optic local networks.
- *e.spire* has completed construction of local fiber networks in 32 markets and has 18 local exchange switches in operation.
- *e.spire's* senior management team is among the most experienced in the CLEC industry, with over 250 collective years of telecommunications experience and more than 50 combined years of experience in the CLEC business.
- *e.spire* has entered into State commission approved interconnection agreements with BellSouth, Southwestern Bell, Bell Atlantic, Sprint/Central, U S West and GTE.

Circuit Switched Network Interconnection

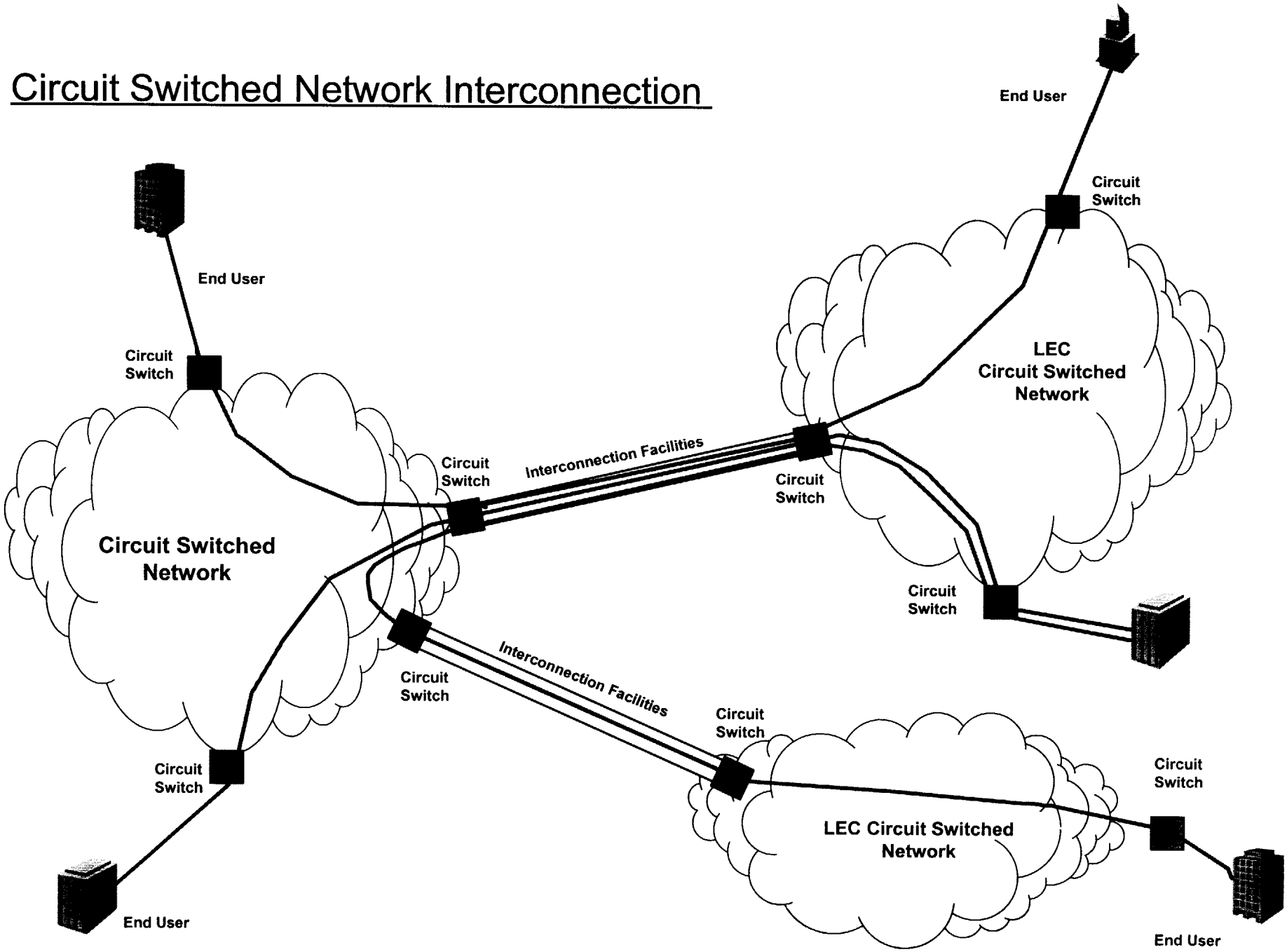

Packet/Cell Network Interconnection

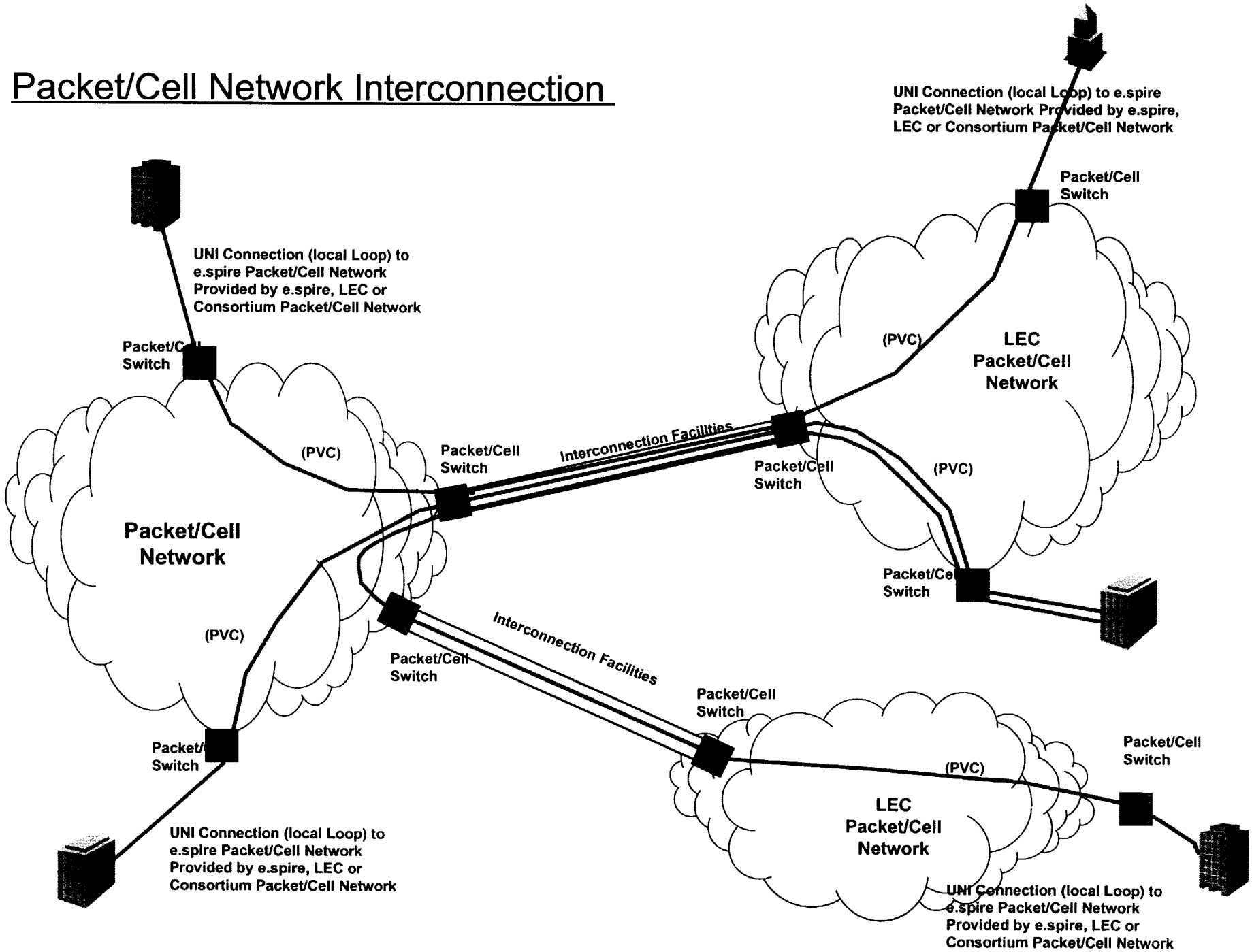

What is xDSL Technology

- Relies on existing copper pair technology
- Digitalization of the local loop
- Employs electronics at each end of the loop to boost capacity, speed and capability of existing phone lines for residential and small business customers
- Electronics include modem at customer premise and DSLAM in central office
- Currently offered under two forms:
  - "Home run copper" installation
  - "DLC (digital loop carrier)" installation

Traditional Loop Distribution Systems: Copper Between Customer Premises and Central Office

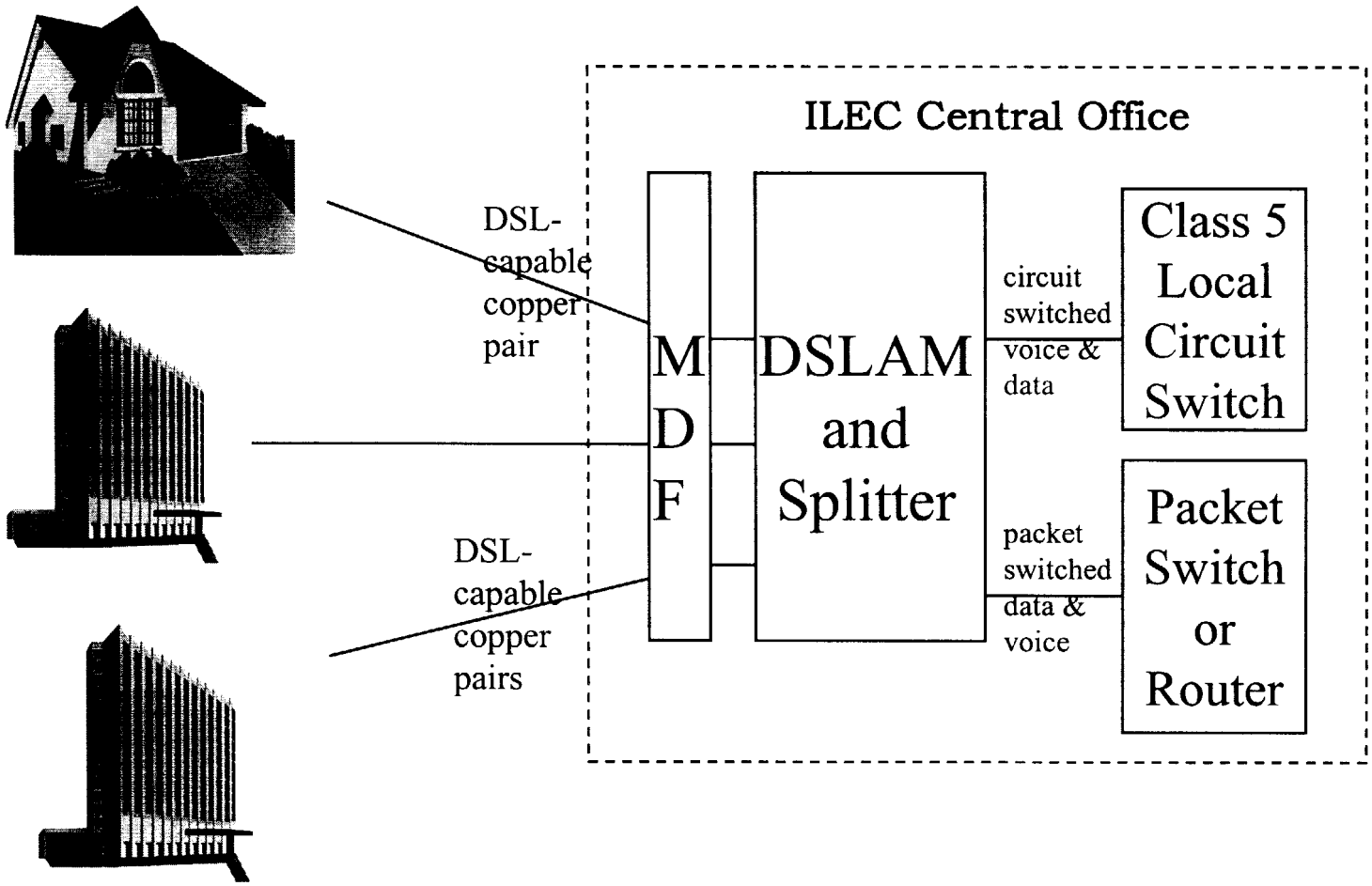

Loop Distribution Systems with CLEC Collocation: Copper Between Customer Premises and Central Office

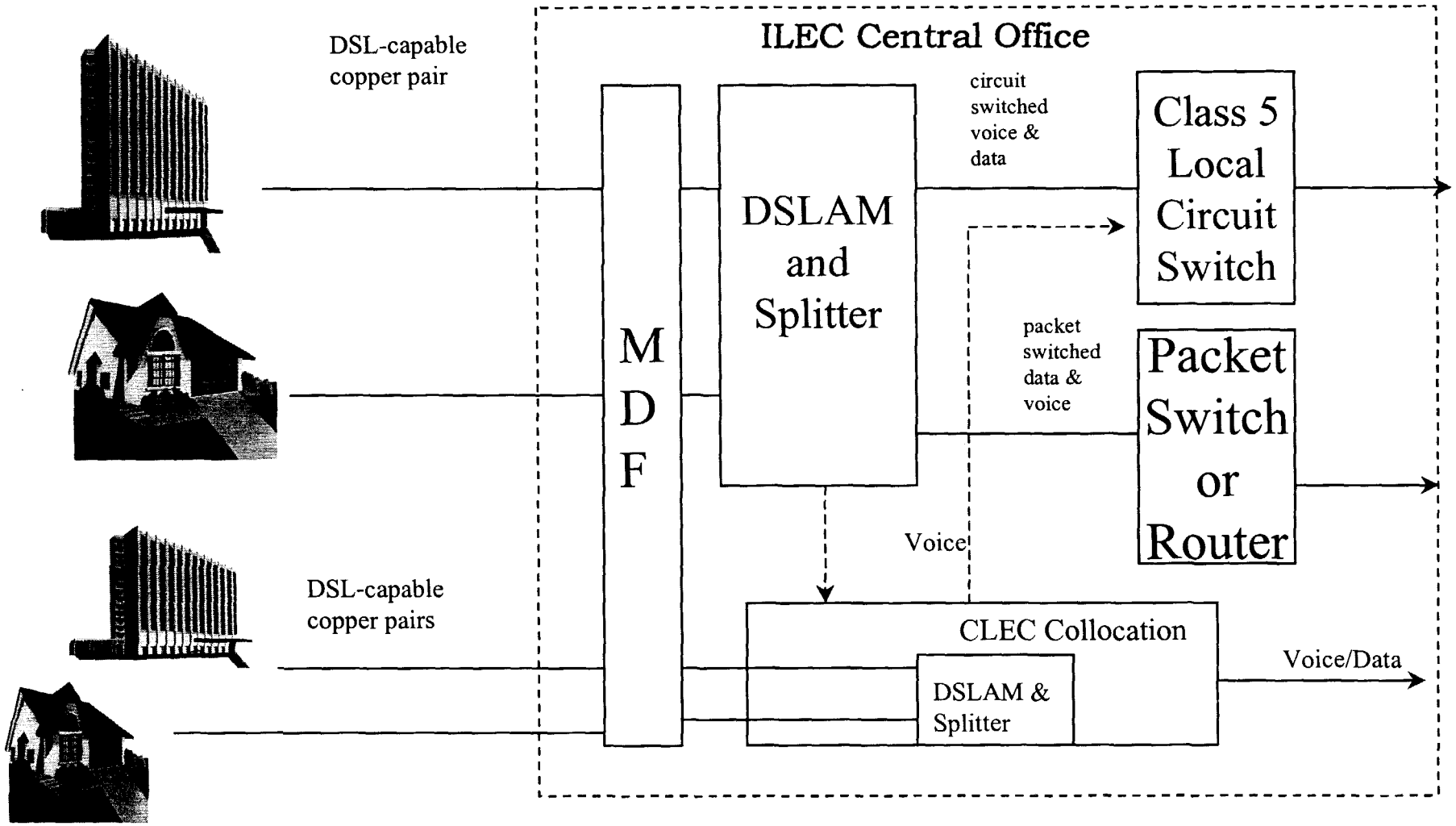

Copper Between Customer Premises and Universal Digital Loop Carrier

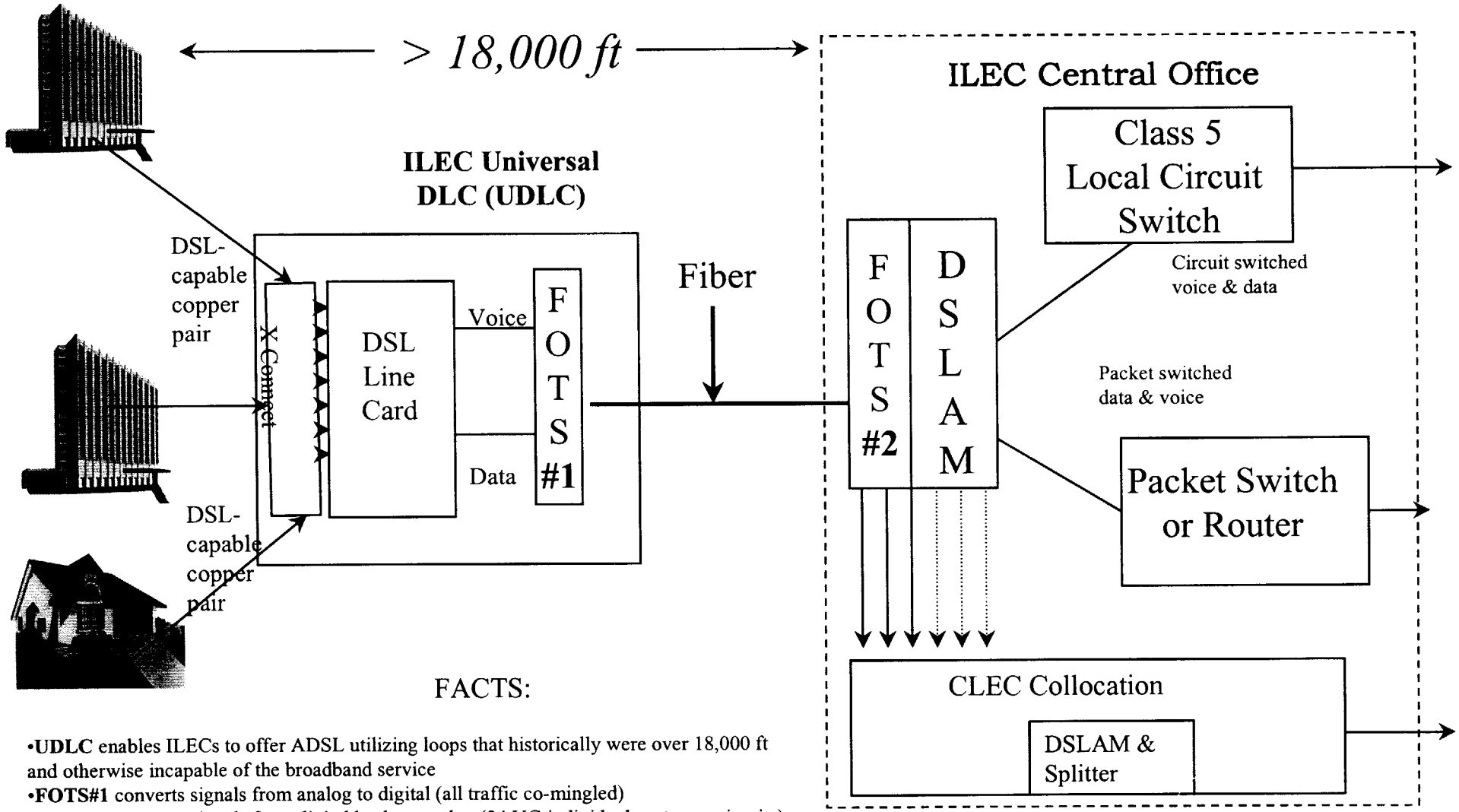

FACTS:

- **UDLC** enables ILECs to offer ADSL utilizing loops that historically were over 18,000 ft and otherwise incapable of the broadband service
- **FOTS#1** converts signals from analog to digital (all traffic co-mingled)
- **FOTS#2** converts signals from digital back to analog (24 VG individual customer circuits)
- **In many instances**, the RBOC refuses access to UDLC loops and alternatively offers cooper from customer to CO **BUT** the length is over 18,000 ft and therefore technically incapable of the service

Copper Between Customer Premises and Integrated Digital Loop Carrier
Next Generation of Electronics

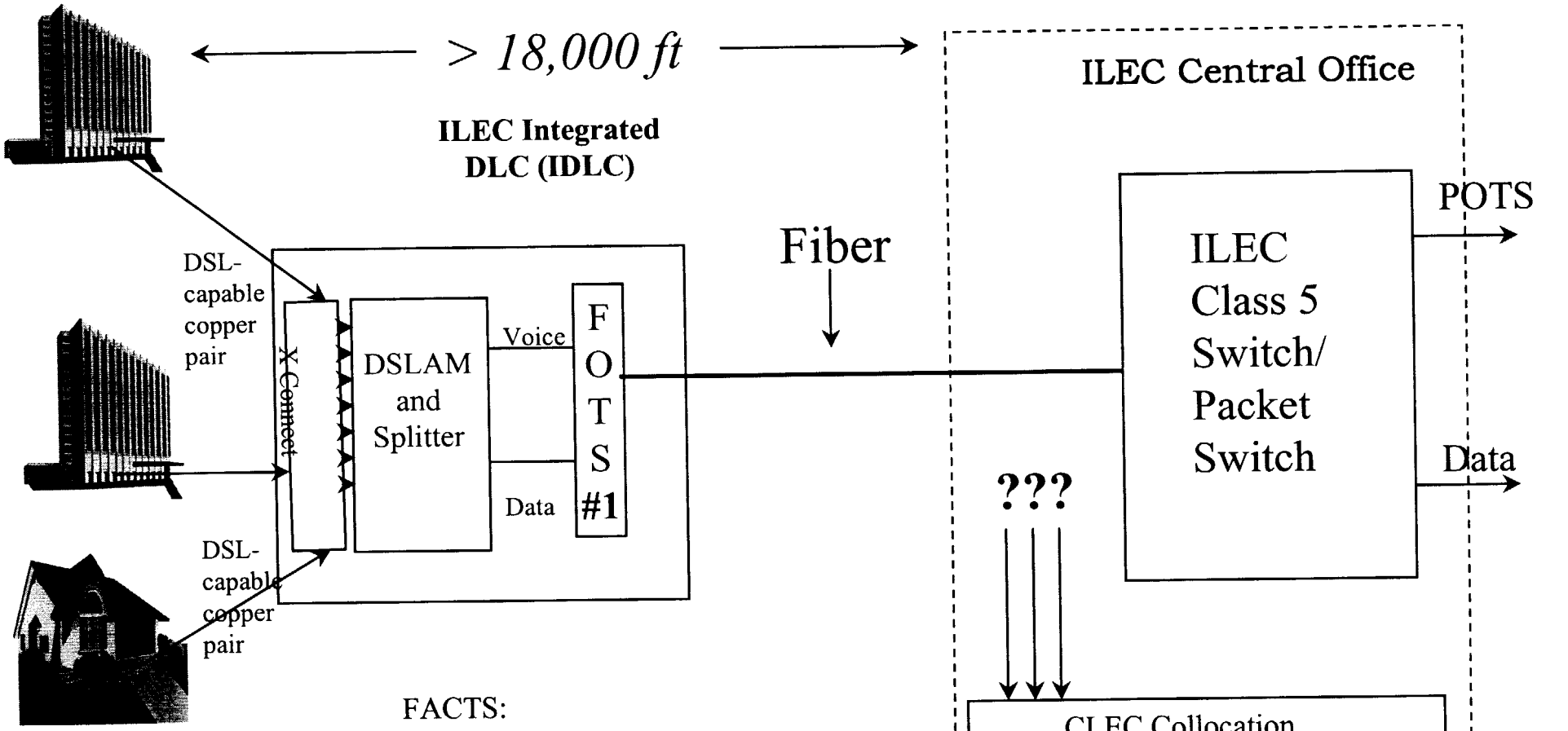

FACTS:

- **IDLC** enables ILEC to offer ADSL utilizing loops that historically were over 18,000 ft and otherwise incapable of the service
- **FOTS#1** converts signals from analog to digital (all traffic co-mingled)
- **FOTS#2 eliminated** by the IDLC technology and traffic is handed off directly to the RBOC switches as digital (DS1 level)
- **Prevents** CLEC from accessing individual VG circuits of individual customers.
- **In many instances**, the RBOC refuses access to IDLC loops and alternatively offers cooper from customer to CO **BUT** the length is over 18,000 ft and therefore technically incapable of the service

e.spire Is Bringing Advanced Telecommunications Capabilities to Consumers Today

- *e.spire* has installed 45 of the more than 331 data switches that CLECs have deployed to date.
- Provided that adequate collocation arrangements can be made, e.spire and "new-generation CLECs" will bring xDSL and other advanced technologies to millions of Americans.
- Over 41 percent of the nation's BTAs currently are covered by CLEC data facilities, including many smaller markets served by *e.spire*, such as Amarillo, Greenville, Montgomery, Baton Rouge, El Paso, Lexington and Little Rock. Customers in these "on net" locations have ready access to advanced telecommunications capabilities *today*, through the efforts of *e.spire* and other CLECs -- not the ILEC monopolies.
- Responding to competitive pressure from CLECs, ILECs have announced massive investments in digital and broadband networks. In short, there currently is neither a crisis nor any deficiency in the deployment of advanced telecommunications capability in the United States.

Section 706 Requires Full Implementation of ILEC Interconnection, Collocation, Unbundling and Resale Obligations

- The unavailability of data interconnection, collocation, unbundling and resale under the 1996 Act is the largest impediment to accelerating the deployment of advanced telecommunications capabilities.
- *e.spire* has experienced tremendous difficulties in seeking interconnection to, collocation with and unbundling of ILEC data facilities and services. Some ILECs already are refusing to provide Section 251 interconnection to frame relay networks.
- The Commission should clarify that Section 251(c) applies to data interconnection, collocation, unbundling and resale. ILEC data networks must be available for cost-based interconnection and unbundling.
- ILECs must provide unbundled access to xDSL functionality. CLECs also must have access to preordering functions that identify xDSL-capable loops.

The Commission Should Clarify That Its Unbundling Requirements Extend to Digital Loops and Subloop Electronics

- The Commission should clarify that ILECs must make the following categories of loops available on an unbundled basis:
  - 2-wire analog
  - 4-wire analog
  - 2-wire digital
  - 4-wire digital
  - Loops provided with electronics and at cost-based rates that reflect the cost of such electronics, including:
    - ILEC digital loop carriers (universal, integrated, next generation)
    - multiplexers
    - optical line terminating multiplexers and other optical-electrical converters
    - xDSL equipment, including remote DSLAMs, DSL line cards used in ISDN or DLC equipment, etc.
- Subloop electronics, including DSL, DLC, ISDN, MUX and OLTM, must be made available on an unbundled basis at cost-based rates.

The Commission Must Establish New Collocation Rules To Ensure Reasonable and Nondiscriminatory Access to ILEC Data Facilities

- The Commission must establish new rules that:
  - Provide for "cageless" physical collocation that allows CLECs to avoid the cost of constructing enclosures for their collocation space, and allows them to collocate in a total area of less than 10 square feet.
  - Provide for enclosed collocation cages of as little as 10 square feet.
  - Allow multiple CLECs to share a single collocation cage.
  - Allow collocated CLECs to establish cross-connects to cages of other collocated CLECs.
  - Eliminate restrictions on CLECs' ability to collocate remote switching modules, xDSL electronics, internet routers and other advanced data equipment.

The Commission Must Establish New Collocation Rules
- continued -

- Require ILECs: virtual and physical collocation rates and charges to reflect the costing principles of Sections 251-252.
- Establish reasonable and nondiscriminatory rules for the allocation of space preparation charges among collocated carriers.
- Establish reasonable and nondiscriminatory deployment intervals for new collocation arrangements, and expansion of existing arrangements.
- As an ongoing practice, incorporate into the Commission's collocation rules the most innovative and effective collocation provisions established by the State commissions.

Virtual Collocation Must Be Available as a Means of Connecting UNEs

- Currently, ILECs are restricting virtual collocation as a means of connecting UNEs, claiming it violates 8th Circuit's *Iowa Utilities Board* decision.
- Virtual collocation must be made available at all points of aggregation along the loop including the controlled environmental vault or its above-ground equivalent, and other points of aggregation where DLCs, MUXs, OLTMs and DSLs are deployed.
- CLECs must be able to identify the type of equipment installed at various points of aggregation.
- Line cards must be installed in aggregating equipment and CLECs must be able to cross-connect aggregating equipment to distribution or feeder plant.

Separate ILEC Data Subsidiaries Represent An Untenable Solution to a Problem That Simply Does Not Exist

- ILECs are announcing tremendous investments in advanced telecommunications networks and technologies on almost a daily basis. They have done this -- and will continue to do this -- without any promise of deregulation under Section 706. Rather, they are beginning to respond to competitive pressures from CLECs.
- The Communications Act is technology neutral. The Commission should avoid any regulatory structure that would differentiate a service based on the technology used.
- The vast majority of interoffice transmissions are made over high-capacity digital facilities -- no "separate" data networks exist. All carriers, including the ILECs, are deploying the same digital equipment for voice and data services. It is impossible to create a workable regulatory policy based on technologies that are intertwined, interchangeable and difficult to distinguish.
- Permitting ILECs to place advanced telecommunications facilities in separate subsidiaries so that they can avoid the unbundling, resale and cost-based pricing obligations of Section 251(c) impermissibly would undermine and rewrite the 1996 Act.

Freeing ILEC Data Subsidiaries from Section 251(c) Obligations Will Undermine the Act

- continued -

- Trunk-side separation is unworkable. It would give ILECs bizarre incentives to place equipment in discrete locations outside the central office -- whether or not such placement made technical or economic sense.

- The 1996 Act was intended to be forward-looking. Congress did not intend to allow ILECs to create new bottlenecks over advanced technologies by the simple device of transferring advanced capabilities to a separate subsidiary.

The Commission Should Preserve and Enhance Procompetitive Rules and Policies Adopted by State Commissions

- Section 706 jointly assigns jurisdiction to the FCC and State commissions.
- The Commission must not unilaterally take action under Section 706 that will disrupt State regulatory initiatives established under the Act, or other sources of authority.
- State-specific rules governing the combination of UNEs are critical to deployment of CLEC data services.
- State decisions requiring sub-loop unbundling facilitate the expansion of xDSL services.
- ILEC commitments to provide digital unbundled loops must be preserved.
- State actions regarding performance measurements and reporting standards should be sustained.

Glossary of Terms

- **ATM:** Asynchronous Transfer Mode is a network technology that supports real-time voice and video as well as data. The topology uses switches that establish a circuit from input to output port and maintain that connection for the duration of the transmission.
- **Broadband:** High speed transmission that is commonly used to refer to communications facilities or services at T1 rates (1.544 Mbps) and above
- **Circuit:** a fixed communications line that connects point A to point B
- **CLEC:** Competitive Local Exchange Carrier
- **DLC:** Digital Loop Carrier technology makes use of digital techniques to bring a wide range of broadband services to customers via twisted pair copper phone lines

Glossary of Terms

- **xDSL (Digital Subscriber Line) Services:**
  - **ADSL:** Asymmetric DSL is a transmission technology that sends voice and high-speed data over a pair of copper wires from 9,000 - 18,000 ft.
  - **HDSL:** High-bit rate DSL is a transmission technology for high bandwidth repeaterless, bi-directional transmission over copper wire for T1 and E1 services up to 15,000 ft.
  - **SDSL:** Symmetric DSL is a transmission technology that provides high bandwidth, bi-directional transmission over 1 copper wire pair for T1 or E1 services up to 10,000 ft.
  - **VDSL:** Very-high bit rate DSL is a transmission technology that generally refers to data transmissions at 25 -50 Mbps from 1,000 to 4,500 ft.

Glossary of Terms

- **DSLAM:** Digital Subscriber Line Access Multiplexer is the electronics attached to the central office of a "home run copper pair" that enables it to split apart (assuming the splitter is integrated in the DSLAM) voice and data as two discrete streams on the output side of the DSLAM. In the NG electronics, DSLAMs are being deployed in the remote terminals versus the central office.
- **Frame Relay:** a high-speed packet switching protocol used in wide area networks (WANs) to transport large volumes of data
- **ILEC:** Incumbent Local Exchange Carrier
- **Local loop:** the physical connection between the main distribution frame in the central office and the interface at the customer premise
- **Packet:** a block of data used for transmission in Local Area Networks (LANs) and packet switching systems.