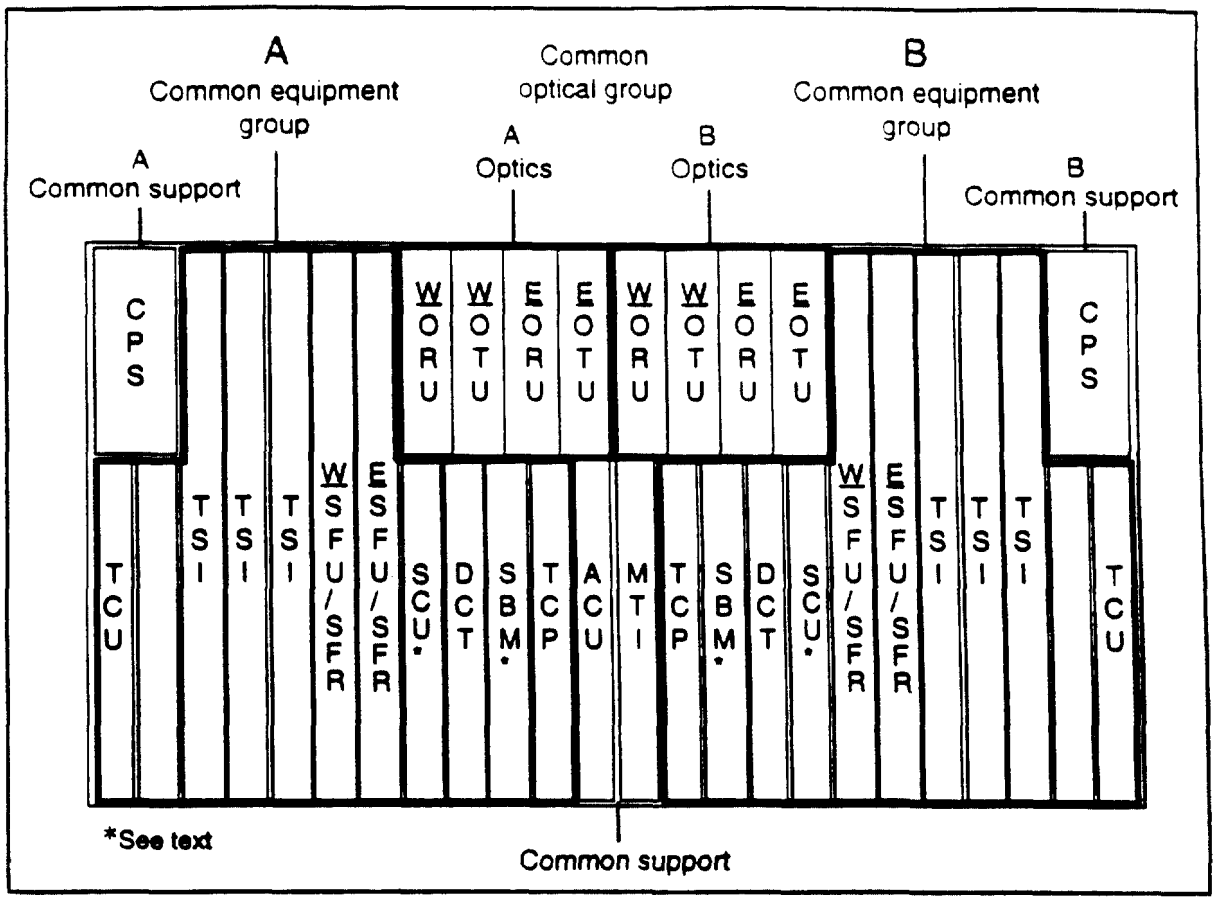

Figure 2. Litespan-2000 Common Control Assembly

2.03 The common optical group provides transmit and receive optical transmission and comprises the optical/electrical interface for the system. The optical units perform the modulation and demodulation of the SONET optical carrier between the remote node(s) and central office equipment. Both long-reach and intermediate-reach versions are available.

2.04 The Optical Transmitter Unit (OTU) performs electrical-to-optical conversion of data for transmission over the optical fiber facilities. The Optical Receiver Unit (ORU) performs optical-to-electrical conversion of data transmitted over the optical fiber facilities.

2.05 The common equipment group includes the Litespan-2000 SONET formatting circuits and provides time-slot interchange, system communications, system timing control, tone generation, memory, and overall system control. The common equipment group consists of the following modules:

- Terminal Control Processor (TCP). The Terminal Control Processor is the central control module for a Litespan node. In addition, the central office terminal (COT) TCP is the master control for the entire system.
- System Backup Memory (SBM). The System Backup Memory unit provides nonvolatile storage for the Terminal Control Processor program and database. Even in the case of catastrophic failure, the SBM retains the system program and database for reboot and restoration. The SBM is available with Release 7.1 and earlier; it is not supported by Release 8.1.

- System Communication Unit (SCU). The System Communication Unit provides nonvolatile memory for the system's software program and database. It also provides for internal communication with other elements of the Litespan system, as well as support for communication with external equipment. It is not supported by releases prior to 8.1; it is required for Release 8.1.
- SONET Formatter Unit (SFU). The SONET Formatter Unit is a bidirectional converter that operates between the Time Slot Interchanger and the optical interface units (ORU and OTU). In the transmit direction, the SFU converts the Litespan internal rate and format to the SONET transport signal. In the receive direction, it converts the SONET transport signal to the Litespan internal rate and format.
- Ring SONET Formatter (SFR). The Ring SONET Formatter performs the same functions as the SFU. It is required for an OC-3 ring configuration.
- Time Slot Interchanger (TSI). The Time Slot Interchanger is a digital cross-connection card that permits the switching of DS0s and DS1s to and from the SONET payload and between channel time slots. The TSI interfaces a service bank with the SFU/SFR. One TSI is required for every three banks. For protection, two TSIs are required for every three banks.
- Datalink Controller and Tone Generator (DCT). The Datalink Controller and Tone Generator is the major interface between the TCP and the TSI. The DCT communicates with any plug-in module that uses the TSI. Basic functions include tone pattern generation and channel unit data link control.
- Timing Control Unit (TCU). The TCU is the central timing source for the Litespan system. It accepts input from BITS, SONET stream, or T1 timing references.

2.06 The common support group controls all alarm functions and provides power distribution for the common control assembly units.

- Alarm Control Unit (ACU). The Alarm Control Unit coordinates the alarm input and output signals. The ACU also controls the operation of the adjacent Maintenance and Test Interface Unit. Since the ACU does not affect service, no provisions are made for protection.
- Maintenance and Test Interface (MTI). The Maintenance and Test Interface operates in conjunction with the ACU to coordinate the input and output of alarm signals. Since this unit does not affect service, no provisions are made for protection.
- Common Power Supply (CPS). The Common Power Supply provides the common control assembly units with the regulated voltages and currents required for operation. One CPS is required for each side of the CCA.

Channel Bank Assembly

2.07 Each common control assembly can support up to nine channel banks. The channel bank assembly (Figure 3) houses the various channel units and channel bank common equipment units.

2.08 Channel banks are available with rear or front access. They are cabled for narrowband only, wideband only, or both wideband and narrowband.

- Channel units. Each channel bank assembly can support up to 56 channel units or 224 VF lines. For descriptions of the various channel units, refer to *Channel Unit Descriptions*, OSP 363-205-260. For provisioning information, refer to *Channel Unit Provisioning Summary*, OSP 363-205-105, *Narrowband Services Application Guide*, OSP 363-205-110, and *Wideband Services Application Guide*, OSP 363-205-120.

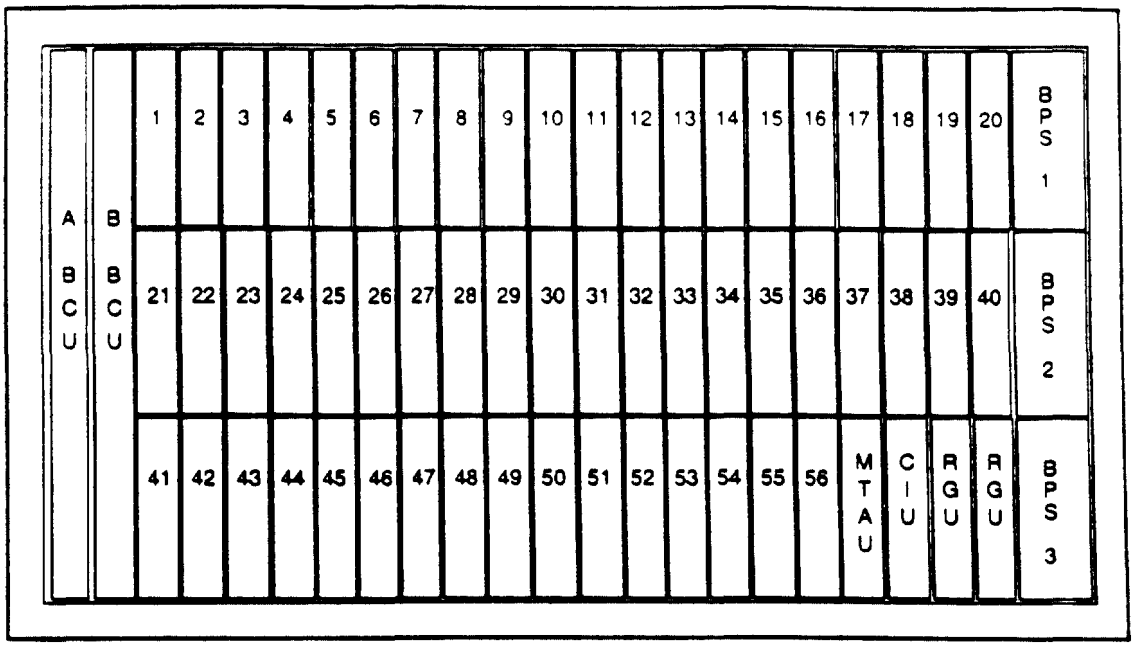

Figure 3. Channel Bank Assembly

- Bank Control Unit (BCU). The Bank Control Unit is the interface between the common control assembly equipment and the channel bank assembly equipment. It is a bidirectional, parallel-to-serial data converter.
- Bank Power Supply (BPS). The Bank Power Supply converts –48 volt battery power into voltage sources for the channel banks.
- Metallic Test Access Unit (MTAU). The Metallic Test Access Unit provides access and monitoring of channel units and T1 lines. It also provides terminations for the use of a Pair Gain Test Controller (PGTC) in the central office. The MTAU goes into the AUX1 slot.
- Communications Interface Unit (CIU). The Communications Interface Unit provides an X.25 interface to TL1-based operations support systems. The CIU goes into the AUX2 slot of the first channel bank of the COT.
- Ring Generator Unit (RGU). The Ring Generator Unit provides ringing voltage for the channel banks, eliminating the need for an external bulk ringing source. Two RGUs are required for protection. These units go into slots AUX3 and AUX4.

Power Distribution Assemblies

2.09 There are three different rack-mounted assemblies for power distribution:

- Universal Fuse and Alarm Panel (UFAP). The Universal Fuse and Alarm Panel provides battery power distribution for the equipment rack containing the common control assembly. The UFAP also includes alarm-reporting hardware, communications ports, and PGTC connections.
- Universal Fuse and Power Panel (UFPP). The Universal Fuse and Power Panel supplies power for extension bays. Extension bays contain channel and/or fiber banks, but no common control assembly. The unit differs from the UFAP in that it does not include alarm-reporting hardware, communications ports, or PGTC connections.

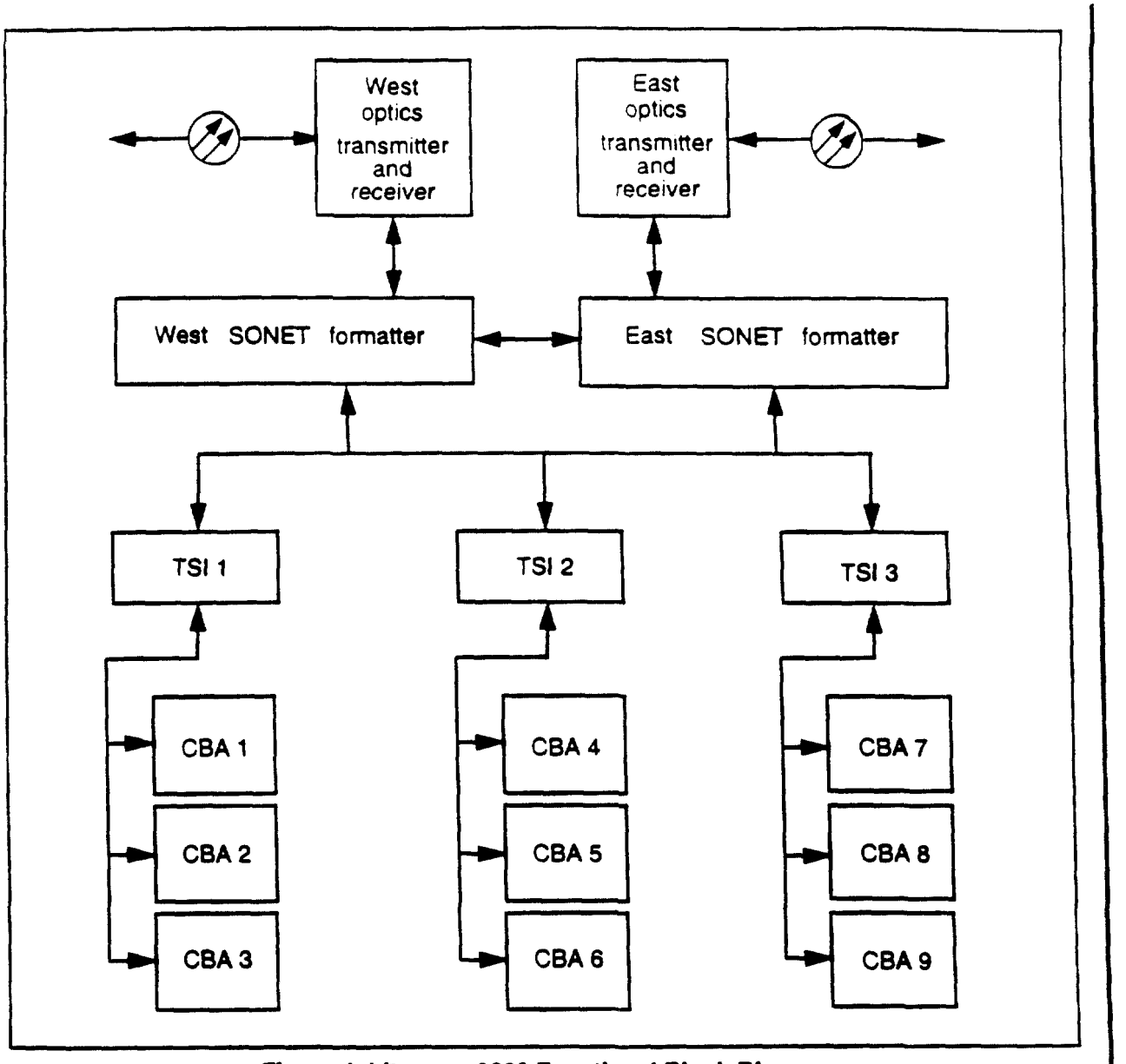

Figure 4. Litespan-2000 Functional Block Diagram

- Power Distribution Panel (PDP). The Power Distribution Panel is used in remote terminal cabinets to direct the DC power generated by the rectifier to the A-side and B-side of the UFAP. The PDP also distributes float voltage to the batteries to maintain their charge. In the event of AC loss or rectifier failure, the PDP distributes backup battery feed to the system.

3 Functional Description

3.01 Figure 4 is a block diagram of a typical Litespan-2000 node. Refer to this figure during the following discussion.

Receive

3.02 In the receive direction, information in a SONET format and rate is received by one of the ORUs, where the light signals are converted to electrical pulses. The ORU extracts clock

information from the incoming pulse stream and uses this information to regenerate each bit in the data stream.

3.03 The regenerated pulse stream is fed to an SFU/SFR. Virtual tributaries (portions of the optical transmission) that are destined for other nodes are identified, passed to the other active SFU/SFR, and sent to the appropriate OTU for transmission downstream. Information for the present node is converted to the internal format and passed to the appropriate TSI.

3.04 The TSI permits the cross-connection of DS0 or DS1 channel units. Using a time-slot interchange technique, the TSI turns the information stream into bytes that are sent through the CBAs to the appropriate channel unit.

3.05 The channel units, in turn, convert the information for use outside the Litespan system. Narrowband channel units convert the information to analog signals for connection to the customer's equipment or central office switching equipment. Wideband channel units feed the information to other digital switching equipment or customer equipment.

Transmit

3.06 In the transmit direction, a channel unit is the interface to the system. For narrowband channel units, voice frequency analog information is received from outside equipment, converted into a digital format, and sent to the TSI. In the case of DS1-rate channel units, the bipolar line signal is converted to digital format and similarly sent to the TSI.

3.07 The TSI inserts all the incoming information from the various channel units into a data stream that is sent to the SFU/SFR. The SFU/SFR inserts the TSI signals into a framed and formatted electrical SONET signal that is used to modulate a laser in the OTU and transmit the optical signal over the fiber-optic facility.

Control

3.08 Overall system control is provided by the main microprocessor on the TCP. Each plug-in unit in the Litespan system can identify itself and indicate its operational status and performance state to the TCP. This information is stored by the TCP in its database and used to issue protection switch-over commands (if the system is equipped for protection) and alarm information to the appropriate facilities. The TCP also controls the EEPROM program storage mounted on the SBM. Any new information (such as a provisioning change) is written into this nonvolatile memory, which retains the information even if there is a catastrophic power failure.

4 Configurations

4.01 "Configuration" refers to the manner in which the nodes in a Litespan system interface with each other. A system ranges from one to six nodes that can be arranged in the following configurations:

- Stand-alone configuration — a Litespan system in which there is only one node.
- Point-to-point configuration — a Litespan system in which there is one central office node (COT) and one remote node (RT).
- Multiple remotes configuration — a Litespan system in which there is more than one RT.

  a) Tandem remotes — a multiple remotes configuration in which the remotes are joined in series. If a COT is present, it is at one end of the series.

  b) Dual-feeder configuration — a multiple remotes configuration in which at least one RT is connected to each optics direction of the COT.
- OC-3 ring configuration — a Litespan system in which the nodes are interconnected to form a closed loop.

LSC-2030 Litespan
3 or 6 CBAs

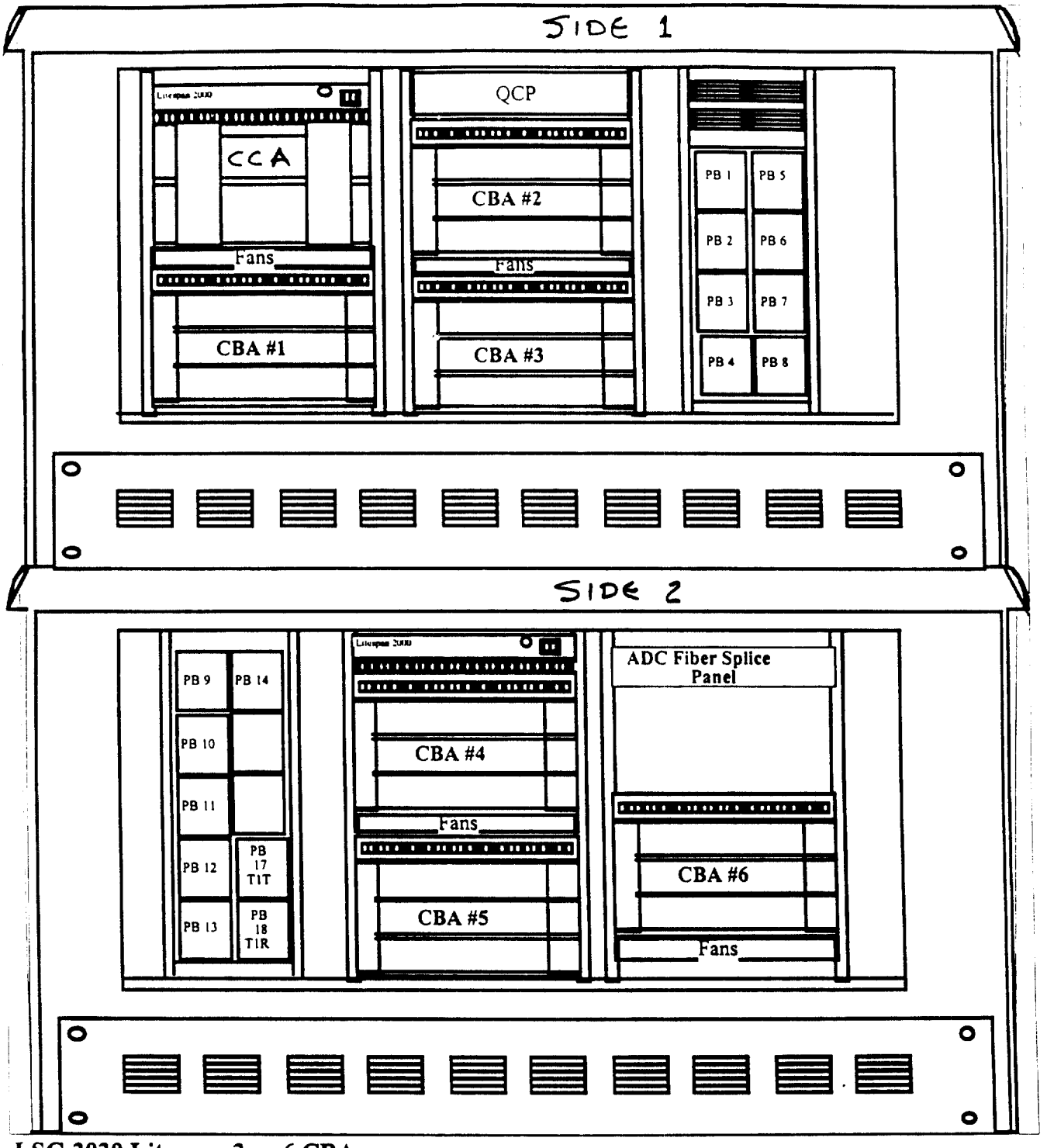

LSC-2030 Litespan 3 or 6 CBAs

Equipped with 1 Common Control Assembly, 3 or 6 Channel Banks, 1 AT&T CPS Power System (50/62.5 Amps equipped), 16 AT&T 307 Protector Blocks for VF Pairs and DS-1s. The cabinet includes an ADC QCP Panel to terminate 56 DS-1s from Channel Bank #1. An ADC fiber splice panel (12 terminations provided, capacity of 48) and 4 fiber jumpers are included. The cabinet is equipped with 4 strings of Fiamm 12SLA75 Batteries (300AH). The cabinet template may be ordered separately. The cabinet is wired for 6 Channel Banks whether 3 or 6 are ordered.

Explanation of BellSouth's Responses to the FCC's Data Request Items 14 and 21 in DA 97-1433, CC Docket 96-45, Dated September 22, 1997

Request Item #14 asked for the following information for all digital line carrier devices purchased in 1995 and 1996:

Material and installation costs separated by common costs and per line equipment costs and the number of lines served by each device at the end of its first 12 months of service.

In response, BellSouth provided an Excel spreadsheet, bsdle2.xls, which contained the following information on an allocation area basis separated by 1995 and 1996 purchases.

Devices:
Installation date, number of channel banks installed during the year (devices), the material price, the installation cost, and the sum of the material and installation costs.

Plugs:
These worksheets provided, on an allocation area basis the following:
Number of commons (corresponds to number of systems)
Number of working lines **at cutover** (As noted in the response, BellSouth does not have the number of lines served at the end of 12 months of service.)
System type (corresponds to vendor)
Total plug cost (reflects material and installation costs)
Total common costs (material and installation)
Cost per line (working plug cost divided by the number of working lines).

The following chart contains an extract of the BellSouth data provided in response to item #14 with proprietary information removed.

Devices – 1995 Placements

				------- *Proprietary Data* -----		
CLLI	Allocation Area	Install Date	Channel Banks	Device Material	Device Installation	Device Total
AGSTGAFL	3316A	20-Jun	3			
AGSTGAFL	3322A	20-Jun	4			
AGSTGAFL	3326A	2-Jun	2			
AGSTGAFL	3326B	1-Oct	2			
AGSTGAFL	5312B	4-Oct	3			
AGSTGAFL	5406D	2-Mar	3			
AGSTGAMT	5124A	25-Apr	2			
HPHZGAES	4108A	12-Apr	1			
HPHZGAES	4112A	17-Apr	1			
HPHZGAES	4230A	15-Mar	2			

Plugs – 1995 Placements

CLLI	Allocation Area	Install Date	Commons	Lines	-------- *Proprietary Data* ---- Sys Type	Total Plug $	Common $	Cost/Ln
AGSTGAFL	3316A	20-Jun	4	351				
AGSTGAFL	3322A	20-Jun	7	626				
AGSTGAFL	3326A	2-Jun	3	185				
AGSTGAFL	3326B	1-Oct	2	120				
AGSTGAFL	5312B	4-Oct	3	87				
AGSTGAFL	5406D	2-Mar	2	192				
AGSTGAMT	5124A	25-Apr	3	0				
HPHZGAES	4108A	12-Apr	2	95				
HPHZGAES	4112A	17-Apr	2	122				
HPHZGAES	4230A	15-Mar	1	5				

There is a correspondence between the Device Table and the Plugs Table. For Allocation Area 3316A, on June 20, 1995, 3 channel banks were placed, 4 sets of commons (i.e., 4 systems) and there were 351 lines working at cutover. On the surface, it may appear that there is an inconsistency between the number of channel banks (devices) placed and the number of systems. However, one must keep in mind that this information has been presented on an Allocation Area basis, not by Distribution Area. Thus, commons were placed to augment existing carrier locations.

Another piece of data that may appear odd is the lack of lines for Allocation Area 5124A. The DLC system has been placed to serve future growth. Thus, at cutover (day one) there were no working lines.

Data Request Item #21 asked for copies of current DLC contracts. BellSouth complied with this request under proprietary cover. However, interpretation of contracts requires a thorough understanding of the system design. Additionally, contract information may provide the cost of individual components, but not the quantities required at the remote terminal (RT) or at the central office. To aid in understanding the DLC equipment and its configuration, an explanation of DSC Communications Corporation Litespan® equipment, field photographs, and details on the number of units required is attached.

Data Request Items #14 and #21 provide a great deal of information about digital loop carrier (DLC) costs. However they do not provide the type of information required to populate cost proxy models. A cost proxy model requires inputs for typical DLC systems that will be deployed in the future taking into consideration the different system sizes required.

An important philosophy underlying the proxy models is the assumed scorched node. Thus, in determining the costs and in establishing the required inputs, the models build the network from the bottoms-up. The information contained in responses #14 and #21 cannot be used to accomplish this task. Some of the most important questions have not been asked: how does the equipment fit together (what are the interdependencies), what are the capacities of the equipment, what equipment is required to serve a customer, and what is the standard configuration. Again, the attachments help to answer these questions.

Remote Terminal
Equipped for 1344 Lines

ITEM	DESCRIPTION	Capacity	Units Required
1.	Pad and Site Preparation	1344	1
2.	HOUSING / CABINET @ REMOTE TERMINAL		
	Cabinet	1344	1
	Common Control Shelf Assembly	1344	1
	Channel Bank Assemblies (CBA)	1344	6
	Note: Minimum of 3 Required, 6 is Standard.		
	Fiber Splice Panel	1344	1
3.	Evergood Power Pedestal and other Miscellaneous Equipment	1344	1
4.	Power Shelf and Panel		
	Rectifier Shelf and Rectifiers	1344	1
	Batteries	1344	1
	Power Distribution Panel	1344	1
5.	Fiber Optics Multiplexer		
	Common Optics Group		
	Optical Receiver Unit (ORU)	1344	2
	Optical Transmitter Unit (OTU)	1344	2
	SONET Ring Formatter Unit (SRFU)	1344	2
	Common Equipment Group		
	Timing Control Unit, Ver. 2 (TCU2)	1344	2
	Terminal Control Processor, Ver. 2 (TCP2)	1344	2
	System Backup Memory, Ver. 2 (SBM2)	1344	2
	Datalink Controller and Tone Generator (DCT)	1344	2
	Time Slot Interchanger, Ver. 2 (TSI2)	1344	2
	Common Support Group (power, maintenance and test access, alarm, alarm control, alarm reporting)		
	Common Power Supply (CPS)	1344	2
	Alarm Control Unit, Ver. 2 (ACU2)	1344	1
	Maintenance and Test Interface (MTI)	1344	1
6.	Channel Bank Assembly at Remote Terminal (Equipped for 672 Capacity)		
	Commons (Remote Terminal)		
	Bank Control Unit Ver. 2 (BCU2)	672	6
	Bank Power Supply (BPS)	672	9
	Metallic Test Access Unit (MTU)	672	3
	Ringing Generator Unit (RGU) (RT only)	672	6
7.	Channel Unit Interface - POTS (Equipped for 672 Lines)		
	Interface Card (4 voice grade per card)	672	168*
8.	Feeder/Distribution Interface (Separate input to model & not included in DLC equipment)		

* Note: Utilization should be considered.

Central Office
Equipped for 4032 Lines
(Handles Three 1344 Systems in the Field)

ITEM	DESCRIPTION	Capacity	Units Required
1.	Hardwired Equipment at Central Office		
	7 Foot Bay Assembly	4032	1
	Common Control Shelf Assembly	4032	1
	Full Electrical Cabling	4032	1
	Fiber Jumpers (lot)	4032	1
	LGX Fiber Patch Panel	4032	1
	DSX-1 Panel	4032	1
2.	Fiber Optics Multiplexer		
	Common Optics Group		
	Optical Transmitter Unit (OTU)	4032	2
	Optical Receiver Unit (ORU)	4032	2
	SONET Ring Formatter Unit (SRFU)	4032	2
	Common Equipment Group		
	Timing Control Unit, Ver. 2 (TCU2)	4032	2
	Terminal Control Processor, Ver. 2 (TCP2)	4032	2
	System Backup Memory, Ver. 2 (SBM2)	4032	2
	Datalink Controller and Tone Generator (DCT)	4032	2
	Timing Control Unit, Ver 2 (TCU2)	4032	2
	Common Support Group (power, maintenance and test access, alarm control, alarm reporting)		
	Common Power Supply (CPS)	4032	2
	Alarm Control Unit, Ver. 2 (ACU2)	4032	1
	Maintenance and Test Interface (MTI)	4032	1
	System Communications Unit (GR-303)	4032	1
3.	Channel Bank Assembly - DS1 (GR-303)		
	Bank Control Unit Ver. 2 (BCU2)	4032	2
	Bank Power Supply (BPS)	4032	3
4.	DS1 Switch Interface Unit (4DS1s per card)	672	3
	Note: Assumes 3 to 1 concentration.		

CROSS-REFERENCE TO HAI INPUTS FOR DIGITAL LOOP CARRIER (DLC) EQUIPMENT

HAI Input Reference	Definition	BST Attachment Reference
B58	DLC Site and Power per Remote Terminal	RT 1, 3, & 4
B61	Initial Common Equipment Investment Includes:	
	Housing	RT 2
	Common Equipment at the Remote	RT 5
	Fiber Optics Multiplexer at Central Office	CO 2
	Fiber Optics Multiplexer at Remote	RT 5
	Initial Line Module at Module (672 lines)	RT 6
	Assumes GR-303 Interface to Local Switch.	
B62	DLC Channel Unit Investment - POTS	RT 7
B66	Optical Patch Panel Investment at Remote	RT 2
B68	Common Equipment Investment per Additional Line Module in an RT (672 lines)	RT 6

NOTE: HAI inputs do not include all the equipment for a DLC system.

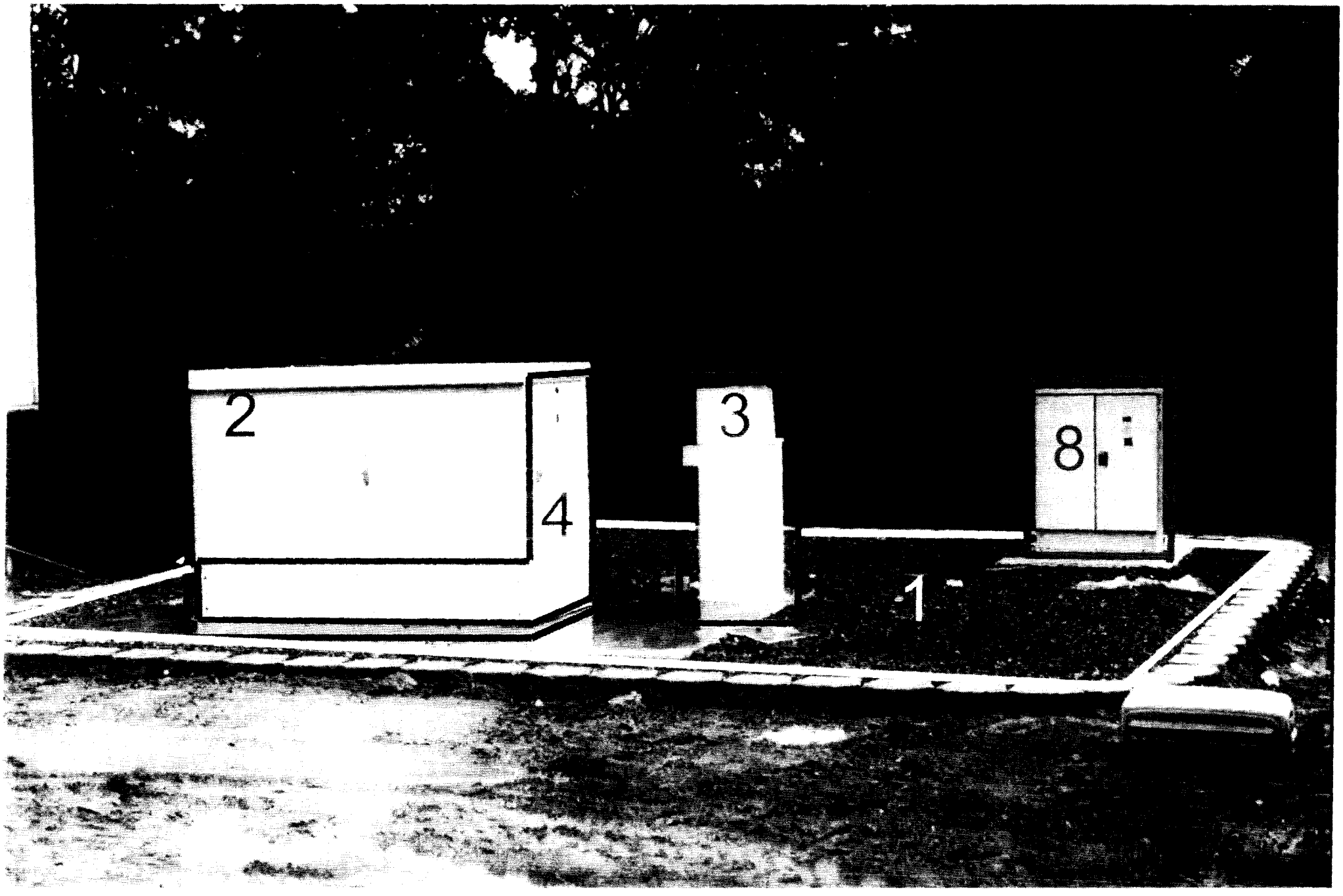
2
4
3
8
1