COMMISSIONERS
H. RUSSELL FRISBY, JR.
CHAIRMAN
CLAUDE M. LIGON
E. MASON HENDRICKSON
SUSANNE BROGAN
GERALD L. THORPE
BRYAN G. MOORHOUSE
GENERAL COUNSEL

STATE OF MARYLAND
PUBLIC SERVICE COMMISSION
STAFF COUNSEL DIVISION
6 ST. PAUL CENTRE
BALTIMORE, MARYLAND 21202-6806
(410) 767-8120
FAX (410) 333-6086

ANDREW S. KATZ
DIRECTOR
STAFF COUNSEL
M. CATHERINE DOWLING
RONALD E. ALPER
JANICE M. FLYNN
JAMES R. SCHELTEMA
CHANA S. WILKERSON
KATHRYN SIMPSON
ASSISTANT STAFF COUNSEL

WRITER'S DIRECT LINE
(410) 767-8008

December 22, 1997

Daniel P. Gahagan
Executive Secretary
Public Service Commission
of Maryland
6 St. Paul Street
Baltimore, Maryland 21202-6806

Re: Case No. 8731, Phase II (c)

Dear Mr. Gahagan:

Enclosed for filing in the above-referenced case are the original and two (2) copies of the Comments of the Telecommunication Division of the Public Service Commission Staff.

Copies of Staff's Comments have been provided to the Hearing Examiner conducting this proceeding and to all parties of record.

Very truly yours,

Janice M. Flynn

Janice M. Flynn
Assistant Staff Counsel

JMF/rt
Enclosures

cc: Joel M. Bright, Hearing Examiner
All Parties of Record

G:\rst\flynn\8731IIc.doc

BEFORE THE
PUBLIC SERVICE COMMISSION
OF MARYLAND

IN THE MATTER OF THE PETITIONS FOR APPROVAL OF AGREEMENTS AND ARBITRATION OF UNRESOLVED ISSUES ARISING UNDER SECTION 252 OF THE TELECOMMUNICATIONS ACT OF 1996	)))))	**CASE NO. 8731 - Phase II(c)**

COMMENTS OF THE
TELECOMMUNICATIONS DIVISION
OF THE STAFF OF THE
MARYLAND PUBLIC SERVICE COMMISSION

Introduction

The Hearing Examiner directed Staff to file a policy position by December 24, 1997. As described below, Staff supports the UNE platform and combined UNEs as a competitive entry option. This entry method can be and should be implemented with a minimum of complexity or additional cost.

Possible CLEC Entry Methods

A primary goal of the Telecommunications Act of 1996 (the "Act") is to get competition started in local markets quickly. There are three types of entry methods required under the Act. Unbundled network elements or UNEs (Section 251(c)(3)), resale (Section 251(c)(4)), and facilities based (Section 251(c)(2)). A competitive local exchange carrier (CLEC) has the right to any and all of these methods under the Act. As discussed in Staff Counsel's comments, the

Commission has the authority to require BA-MD to provide another method of entry to ILECs, specifically, the UNE platform.

UNE Platform and Combined-UNE Entry Methods

The UNE platform consists of all ILEC-provided UNEs needed to make up a complete service (yet permitting substitution of CLEC-provided elements if the CLEC so chooses). A combination of UNE's is any subset or subsets of the UNE platform. A UNE platform or any combination of UNEs could encourage several CLEC entry methods. A UNE platform or combined UNEs could provide the starting point for CLECs to develop innovative networks. These will bring competition sooner rather than later to all parts of the state without unnecessary or additional costs to the ILEC or CLEC.

UNE Platform Versus Resale

A CLEC could use the UNE-platform to replicate services offered by Bell Atlantic or could use it to provide services and features that Bell Atlantic does not already provide. If it happens that a CLEC provides the functional equivalent of a Bell Atlantic service, then the UNE platform functions would be equivalent to what a CLEC could obtain through resale. The sum of the combined UNE rates may be higher or lower than the equivalent retail service's wholesale rate.

CLECs may prefer to use a UNE platform instead of wholesale service because either because the platform costs less or because it provides a

stepping stone to service enhancements. These service enhancements may be self-provisioned or purchased from other CLECs or from the ILEC.

Migration to Alternative Facilities

A key benefit of the UNE platform is that it will enable CLECs to move gradually and logically toward their own self-provisioned networks. A CLEC could first start with a full service UNE platform of combined UNEs from the incumbent local exchange carrier (ILEC). At its discretion, the CLEC could progressively build over time from this platform by replacing these ILEC elements with innovative network elements of its own, or from a third party, until its service becomes a completely self-provisioned, or a facilities-based service. This is called migration.

A CLEC could replace several ILEC elements with its own elements at any time in a particular wire center depending on the supply, cost and demand characteristics in that wire center. At any point, a CLEC may require different UNEs, or UNE combinations in different wire centers in the state.

Different CLECs may be in different phases of migration in a particular wire center at any point in time, depending on their entry strategies and degree of success. In the migration to a facilities-based network, a CLEC may be able to self-provision more facilities in some locations (e.g., urban) than others (e.g., rural). Eventually, all self-provisioned facilities in a particular wire center could be provided by any CLEC, either onto itself or to other CLECs.

Many entry and migration scenarios are possible.

CLEC options and flexibility will increase the chances that competition can flourish. CLECs probably do not know at this time exactly what innovations will be winners in the marketplace. As CLECs learn more about the local market through their market research and customer demands for service, they will need the flexibility to quickly place a network in place to satisfy the demand.

Examples of Migration Strategies

One possible migration strategy to a facilities-based network is shown in Attachment, p. 1[1]. There are 15 options or steps, each shown by a column on the chart. The six major network elements[2] required are shown as rows. In each step, ILEC-provisioned network elements are replaced by CLEC-provisioned elements.

To start, a CLEC may begin at any particular step, or it may migrate gradually through all 15 steps. A multitude of CLEC strategies is possible. For example, the 15 steps could be grouped into five phases. A CLEC could migrate through each of five phases implementing all steps within each phase simultaneously. These are discussed below:

Phase 1

In the first phase, the CLEC could first provide voice mail, branded ILEC Directory Assistance (DA) and Operator Services (OS). See, Columns 1-3. Branding of Directory Assistance can be accomplished two ways: (1) automated

---

1 Prepared by MCI for an ExParte meeting with the FCC.

2 The six major network elements are loop, local switching, tandem switching, transport, signaling and database, other.

recording provided by the ILEC to the CLEC customer or live ILEC operator, or (2) a CLEC operator could make the announcement that the CLEC is providing the service. These ILEC-provided services may be migrated to enhanced services where the CLEC provides DA and OS via its own databases. See, Column 4.

To effectuate these enhanced services, programming in the ILEC switch could direct the customer's DA call to the CLEC's DA operator, who may in turn use the CLEC provided DA database. This is called "customized routing." The CLEC provided DA database could include enhancements such as faster look-up service, or additional information embedded in the database.

For the CLEC to provide DA or OS via this method, no collocation[3] of CLEC equipment in the ILEC wire center office is needed. For existing customers, there should be no need for additional wiring and cross connects on the line side. There may be a trunk-side interconnection. Some programming is

---

[3] In Case 8766, expert witnesses from both BA-MD and the ILECs have testified about physical and virtual collocation arrangments. These experts appear to agree on the following information: For physical collocated interconnection, the collocator will provide, install, and maintain transmission equipment in an enclosed space located within the Bell Atlantic central office (CO). Bell Atlantic will pull collocator-provided cable from a manhole near the CO to the collocators enclosed space. The collocator is responsible for maintenance of that cable and its transmission equipment. This allows a CLEC to locate its own telecommunications relay rack equipment in a segregated portion of the CO. The CLEC then pays the ILEC for the use of the space within the CO and is provided with the ability to enter the CO to install, repair, and maintain its collocated equipment. Virtual collocation is an arrangement which allows a CLEC to place its own telecommunications equipment in an area of a CO currently used by the ILEC to house its equipment (and not be segregated from the ILEC equipment). Typically, the CLEC purchases the equipment dedicated for its use on the ILEC's premises and sells the equipment for a nominal $1.00 sum while maintaining a repurchase option. Typically, the ILEC handles day-to-day maintenance activities and is reimbursed by the CLEC. The CLEC is permitted to enter the CO upon request, but requires a security escort. The MCI/AT&T testimony sponsored in Case No. 8766 states "it would be most efficient in a virtual collocation arrangement for a CLEC to place its own telecommunications equipment in an area of the Central Office currently used by the ILEC for its own equipment." The AT&T/MCI model includes the cost of security access cards for controlled access by CLEC representatives into the CO in a physical collocation arrangement.

required in the BA-MD switch (called customized routing) to direct the call to the proper CLEC DA or OS system. Also Line Class Codes (LCCs) or AIN programming[4] must be updated. This could be the first phase in the migration to total facilities-based service.

Phase 2

The second phase could be to include all the elements in the first phase plus the CLEC would provide its own physical transport of DA and OS calls, and the transport of all toll calls. This phase also does not require collocation. Dedicated trunking could be purchased or self-provisioned and this would require trunk-side interconnection.

Phase 3 (a or b)

In a third phase (Phase 3a), the CLEC provides all network elements including the loop and incorporates unbundled switching using the ILEC switch. The CLEC may need building entrance facilities and collocation from the ILEC on an individual case basis. This phase would require cross connects within the ILEC space to connect the CLEC elements to the ILEC switch. See, Column 10.

Another entry method (Phase 3b) would be for the CLEC to provide all switching, but use an ILEC unbundled loop. This method may also require collocation. The customer would have to be disconnected from the ILEC switch

---

[4] Line Class Codes (LCCs) are the designations that tell the switch how to treat the originating call for a line. For example, toll restriction, flat-rate or measured-rate service, and other distinctions are controlled by the LCC. The Advanced Intelligent Network (AIN) solution makes use of the AIN capability of the network and may avoid potential exhaust of wire center LCCs.

and be reconnected to the CLEC equipment (concentrator, bulk transport, switching). See, Column 11.

Phase 4

In a fourth phase, the CLEC could provision its own switching and some portions of the loop, and purchase other portions of the loop (such as unbundled distribution or feeder) and entrance facilities from the ILEC. See, Columns 12-14. Collocation may be required in this phase.

Phase 5

In a fifth phase, all facilities would be provided by the CLEC. All that is required by the CLEC in this phase is a trunk-side connection at an ILEC tandem or end office.

Comparison of Proposals for Combined UNEs

Staff Data Request

Staff asked via data request for the parties to explain their proposals from a technical, operations support system (OSS) and customer service viewpoint. This filing represents Staff's best understanding given the facts available at this time although we recognize that we may need to update some information at the January 9th hearing.

Preliminary Information

Staff asked the parties to explain what BA-MD would have to do differently from a normal service disconnect or reconnect for one of BA-MD's customers than what would have to be done to provide access to that customer to a CLEC. MCI provided Staff with a copy of a Bell Atlantic presentation made to CLECs[5] showing the proposed processes involved to disconnect and reconnect a customer e.g., cuts, splices, new wiring, programming, ordering and provisioning. These presentation materials are shown in Attachment pp. 2-13.

Bell Atlantic Proposal

Physical Connections

Under the Bell Atlantic proposal, collocation would be required for all the five phases of migration described above. For a new customer, BA-MD would connect both the UNE port and UNE loop to a CLEC collocation node required by Bell Atlantic. The CLEC must perform a cross connection of UNEs (port and loop) inside its collocation node or space. See, Attachment, p. 2.

For conversion of an existing customer, BA-MD would disconnect the existing cross connect (AB) and install a new cross connect (AH). BA-MD would install a new UNE port, reassign the telephone number to the "new" port and connect it to a CLEC collocation space (EDF). The CLEC would connect these in its collocation space. Each CLEC customer order would require a disassembly

---

[5] "CLEC Unbundling Network Elements Seminar," prepared by Telecom Industry Services, Bell Atlantic, New York City, N.Y., December 9, 1997.

and three reassemblies represented by the dotted lines. Essentially, this would amount to a complete service disconnect and reconnect. The materials required to perform the disconnect and reconnect include jumper wires, terminal blocks, and electronic equipment as well as a collocation space in each central office (CO). See, Attachment, p. 6.

For unbundled inter-office transport and unbundled dedicated trunk ports, BA-MD would connect transport and trunk port to the CLEC collocation node. The CLEC would install multiplexing equipment and cross connects within its collocation space. See, Attachment, p. 10.

In sum, BA-MD wants a CLEC to perform cross connections in a collocation space for both the line side and the trunk side of the switch. All cross connects and wiring required are exhibited as dotted lines and arrows in the Attachment pp. 2, 6, 10. Staff is unclear on the specifics of what equipment is required or allowed (and at what locations) under the BA-MD proposal.

Operations Support Systems - Ordering

Documents

For ordering, BA-MD appears to want CLECs to tender four documents per customer: (1) a local service request (LSR) for the unbundled loop, (2) a LSR for the unbundled line port, (3) an access service request (ASR) for the dedicated IOF transport, and (4) an ASR for the dedicated trunk port. See,

Attachment pp. 3, 11. It is unknown whether BA-MD would require an order-initiating charge for each ordering document.

Coordinating Entries

BA-MD wants CLECs to coordinate the documents with entries on the documents. The CLEC would specify "Cable ID and Pair [of wires in cable]" on a LSR. BA-MD wants the CLEC to request some coordination on the part of BA-MD. The CLEC must "request that orders be related" and due dates must be specified. It appears the CLEC must "connect the two elements" (Line LSR and Port LSR) via a cross reference entered on the two documents. See, Attachment, p. 3-4.

Staff Observations and Recommendations

UNE Platform and Combined UNEs

Staff believes the migration option using a UNE platform or combined UNEs is a viable competitive entry method. It must be implemented in an economical and efficient manner which is simple, requires few ordering documents and connections, and little additional wiring and space. There should also be no disassembly and reassembly of UNEs unless the CLEC request the disassembly/reassembly in order to provide its services.

Collocation should not be imposed on CLECs. Where the CLEC chooses to use collocation, the CLEC should have the option of physical or virtual collocation, space permitting.

Phases 1-2

Physical Connections

The most economical and reliable methods for providing UNE platforms and combinations of UNEs should be employed. The technical details of BA-MD's proposal concerning the physical plant still need to be clarified to the Staff. Staff is available to help the parties explore options. For example, if any assembly is required at all, it may be possible for a CLEC to assemble the UNEs in BA-MD's space without need for collocation.

Collocation Requirements

In phases 1-2, it appears to be uneconomical to require CLECs to establish collocation, and install the extra cross connects that a collocation space would require. Staff drew simplified diagrams of what may be a more efficient method for providing the service using a UNE platform or combined UNE approach. See, Attachment, p. 14-16.

If a new customer moves into an area and is attracted by a CLEC, and the CLEC wishes to serve the customer with a UNE loop and a UNE port, the CLEC should be permitted to make the connections in the most efficient manner using the existing wire center infrastructure without the need for collocation. BA-MD may require that CLEC technicians or contractors be escorted as they make the required connections. However, if BA-MD prefers to make the required

connections itself using BA-MD personnel at fair compensation[6], then the CLEC may elect this option. See, Attachment, p. 14.

If a CLEC attracts an existing customer, then existing connections to the Main Distribution Frame and the existing line-side port should be left in place. The UNE line-side port should be the existing port serving the customer. See, Attachment, p. 15.

If the CLEC needs UNE dedicated inter-office facilities for transporting calls and a UNE dedicated trunk port, the CLEC should be able to use existing connections to the digital signal cross-connect (DSX) or other suitable transport interconnect device (e.g., fiber mux or terminal, digital cross connect electronic). See, Attachment, p. 16.

This approach avoids unnecessary collocation and rewiring. Staff's proposed method requires no disassembly and reassembly of network elements where not absolutely required, and no installation of additional cross connects where existing ILEC connections can provide the combination of UNEs required by the CLEC. Only where connections do not exist, must the CLEC take responsibility for providing the connections using its own personnel or contractors.

Reassembly Requirements

It appears wasteful and inefficient for the CLEC to have its own technician present to do a reassembly, using his or her own tools and test equipment when

---

6 These rates terms and conditions are at issue in Case No. 8766.

disassembly was not necessary in the first place. Any unnecessary requirements for CLECs to reassemble UNE's would be a barrier to competition and introduce unnecessary risks to service quality. Makework should be avoided, because the cost of make work will only place upward pressure on prices paid by consumers.

Phases 3-5

Collocation Requirements

Collocation may be required at the CLEC's discretion in phases 3 through 5 depending on the circumstances. The collocation requirements of these later phases should not be mandatory in the earlier phases. When collocation is deemed necessary, CLEC's may exercise an option for physical or virtual collocation.

Reassembly Requirements

In the later phases (3-5), a CLEC (and/or BA-MD) may have to physically disassemble and reassemble the UNEs presumably either within or outside a collocation space or in conjunction with a piece of virtually collocated equipment.

Operations Support Systems (OSS) - Ordering

In an ILEC's Operations Support System pre-ordering phase, the end-user customer calls the ILEC service center, the service representative retrieves the record via computer, verifies the service and equipment, takes the customer's order, and the ordering information is transmitted to several locations

in the company. It is Staff's understanding that the ILEC wire center serving the customer receives a single document with information necessary to turn-up the service. The ordering document does not have to be matched up with other documents.[7]

CLECs want the BA-MD systems used for ordering UNEs to be as simple, risk free and timely as systems used for BA-MD's end-user customers. CLECs also want a minimum of ordering documents. Having to use many ordering documents creates a potential for error, timing and coordination problems which would be avoided with a single order. The result is increased risk of customer dissatisfaction.

Potential for Error

The BA-MD ordering process requiring multiple documents for multiple UNEs could lead to a CLEC error. The BA-MD process also requires that both orders be worked by the ILEC concurrently and accurately. This could lead to a ILEC error.

Also, the BA-MD process requires that the correct wires be identified, unwrapped or unfastened, lifted, moved and rewrapped. There are thousands of these wires in a wire center making mistakes more probable with the added complexity. If anything has not been done properly, a customer could be out of service. Hence, disassembled UNEs coupled with a multi-document ordering

[7] The exception is cross-town move orders, which require two orders (F and T) which must be matched.

method introduces a higher risk of customer dissatisfaction, to the detriment of all telephone consumers.

Optimal OSS

It appears that OSS becomes more complicated and risk prone under the BA proposal because more information is required on the customer specific document tendered by the CLEC. It appears that four separate ordering documents should not be required, as proposed by BA-MD. Fewer CLEC ordering documents may be optimal, with the ILEC "exploding" these into multiple internal documents as needed for its internal purposes to get the service provisioned.

Summary

It is sound public policy to require BA-MD to offer CLECs a UNE platform and combined UNEs in a simple and cost efficient manner. Otherwise, inefficiencies will be reflected as higher prices and decreased service quality for all consumers.

arb2c.doc

CERTIFICATE OF SERVICE

I HEREBY CERTIFY THAT on this 22nd day of December, 1997, copies of the foregoing Comments of the Telecommunications Division of the Public Service Commission Staff were either hand-delivered or Federal-expressed to all parties of record.

Janice M. Flynn
Assistant Staff Counsel
Public Service Commission
of Maryland
6 St. Paul Street
Baltimore, MD 21202-6806
(410) 767-8008

Unbundled Network Elements Migration Matrix

Indicating Relative position of Unbundled Local Switching

Exhibit 1

CLECs can progressively replace Unbundled Network Elements provided by the ILEC with elements of their own, or a third party until service becomes facilities based. This matrix depicts this migration process.			Full Unbundled Network Elements	Plus CLEC Provides Voice Mail	Plus CLEC branded DA, OS	CLEC provides own DA, OS & Voicemail	CLEC provided DA, OS, Voicemail & Transport to OS platform	CLEC provided DA, OS, Voicemail, Transport & all non-local calls llec provides Local switch, 911 & Local calls only	ILEC provides switching, switch'g intelligence, signaling & intraswitch calls only	ILEC provides switching, signaling & intraswitch calls only. CLEC provides switching intelligence	ILEC provides switching & intraswitch calls only. CLEC provides switching intelligence & signaling	Unbundled Local Switching	Unbundled Loop	CLEC provides feeder & switching (ILEC provides unbundled Distribution)	CLEC provides distribution & switching (ILEC provides Unbundled feeder)	CLEC provides switching & loop ILEC provides build'g Entr Facilities	All Facilities provided by CLEC
			1	2	3	4	5	6	7	8	9	10	11	12	13	14	15
Loop	(cs)	NID/Build'g Entr. Fac. (fr)	x	x	x	x	x	x	x	x	x	C	x	x	C	x	
	(cs)	Distribution (cables) (fr)	x	x	x	x	x	x	x	x	x	C	x	x	C	C	C
	(cs)	Feeder (cables) (fr)	x	x	x	x	x	x	x	x	x	C	x	C	x	C	C
	(cs)	Concentrator (DLCs) (fr)	x	x	x	x	x	x	x	x	x	C	x	C	x	C	C
Local Switching	(cs)	Customer (Line) Port (fr)	x	x	x	x	x	x	x	x	x	x	C	C	C	C	C
	(cs)	Vertical Features (fr/us)	x	x	x	x	x	x	x	x	x	x	C	C	C	C	C
	(cs)	CPU (switch'g) (us)	x	x	x	x	x	x	x	x	x	x	C	C	C	C	C
	(e/os)	Network (Line) Port (us)	x	x	x	x	x	x	x	x	x	x	C	C	C	C	C
	(cs)	Customized Routing (us)		x	x	x	x	x	x	x	x	x					
	(e/os)	Trunk Ports (fr)	x	x	x	x	x	x	x	x	x	x	C	C	C	C	C
	(e/os)	Bill'g Data (emr/edas) (us)	x	x	x	x	x	x	x	x	x	x	C	C	C	C	C
Tandem Switching	(e/os)	Trunk Ports (fr)	x	x	x	x	x	x	C	C	C	C	C	C	C	C	C
(for Tranalt)	(e/os)	CPU (us)	x	x	x	x	x	x	C	C	C	C	C	C	C	C	C
Transport	(e/os)	Common (us)	x	x	x	x	x	x									
	(e/os)	Dedicated (fr)		x	x	x	C	C	C	C	C	C	C	C	C	C	C
Signaling & Database	(e/os)	SS7 (us)	x	x	x	x	x	x	x	x	C	C	C	C	C	C	C
	(e/os)	LIDB (us)	x	x	x	x	x	x	x	C	C	C	C	C	C	C	C
	(e/os)	AIN (us)	x	x	x	x	x	x	x	C	C	C	C	C	C	C	C
	(e/os)	800 Portability (us)	x	x	x	x	x	x	x	C	C	C	C	C	C	C	C
Other Services	(e/os)	DA (us)	x	x	x	C	C	C	C	C	C	C	C	C	C	C	C
	(e/os)	OS (us)	x	x	x	C	C	C	C	C	C	C	C	C	C	C	C
	(e/os)	911	x	x	x	x	x	x	C	C	C	C	C	C	C	C	C
		Voicemail		C	C	C	C	C	C	C	C	C	C	C	C	C	C

(us) = Usage sensitive (fr) = Flat rated

(e/os) = End Ofc. Specific (Stage 1) (cs) = Cust. Specific (Stage 2)

C = CLEC or 3rd Party Provisioned X = ILEC Provisioned

REV. 10/03/97, SVM

Go to C: MyDoc~ UNE~ulsMat2.xls

Attachment P

New Service with UNE Loop & UNE Port

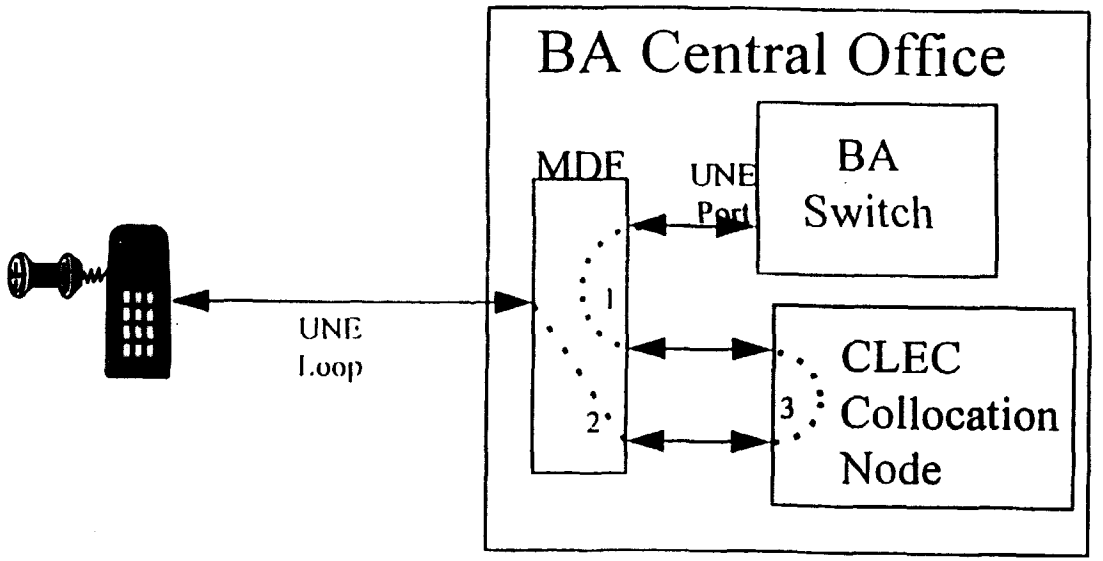

1) BA connects unbundled port to CLEC collocation node.

2) BA connects unbundled loop to CLEC collocation node.

3) CLEC performs cross-connection of UNEs (port and loop) inside its collocation node

NOTE: MDF stands for Main Distributing Frame

Ordering

- Two orders required.
- CLEC orders UNE loop on LSR with "Cable ID and Pair" specified
- CLEC orders UNE port with line features on LSR with "Cable ID and Pair" specified
- CLEC requests that orders be related and specifies due date based on normal intervals

Provisioning

- Bell Atlantic connects the loop to the "Cable ID and Pair" as specified by the CLEC
- Bell Atlantic connects the port to the "Cable ID and Pair" as specified by the CLEC
- Bell Atlantic notifies the CLEC that the work is completed
- CLEC connects the two elements in their collocation or has them preconnected

Billing

- BA bill CLEC for separate elements
- BA bills CLEC for UNE loop and SAC charge
- BA bills CLEC for UNE port with associated features and usage and SAC charge

Conversion of existing end user to UNEs

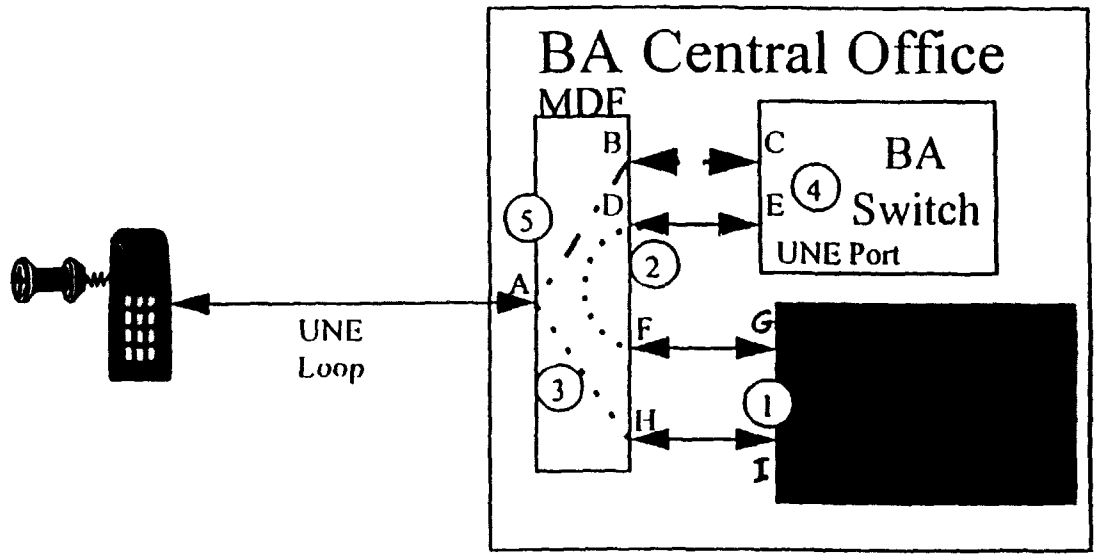

1) CLEC may pre-wire assignment to UNE loop assignment (G-I).
2) BA wires new office equipment to CLEC "Cable ID & Chan/Pair" collocation assignment (E-D-F).
3) BA cross-connects at CLEC specified "Cable ID & Chan/Pair" (H) to old loop appearance but dead ends it at the MDF (A).
4) RCMAC installs software change and turns up new office equipment (OE) at designated time (C-E).
5) BA central office technician completes loop wiring (H-A) at designated time and removes old OE to loop connection (A-B).

NOTE: MDF stands for Main Distributing Frame

Ordering

- CLEC orders UNE port with line features on LSR with "Cable ID and Pair" specified
- CLEC orders UNE loop on LSR with "Cable ID and Pair" specified
- CLEC requests that orders be related and specifies due dates based on normal intervals

Provisioning

- Bell Atlantic wires the UNE loop to the "Cable ID and Pair" as specified by the CLEC connecting the SAC and leaving the loop connection until the later specified time
- Bell Atlantic connects the port with new OE to the "Cable ID and Pair" as specified by the CLEC
- Bell Atlantic at the agreed to time effects the RCMAC changes on the new OE and the frame technician disconnects the existing loop cross connection to the old OE and connects the SAC to the UNE loop.
- Bell Atlantic notifies the CLEC that the work has been completed
- CLEC connects the two elements in their collocation or has them preconnected