# *Billing*

- BA will bill for separate elements
- BA bills CLEC for UNE loop and SAC
- BA bills CLEC for UNE port with associated features and usage and SAC

Bell Atlantic

# ❖ *Unbundled Dedicated IOF Transport and Unbundled Dedicated Trunk Port*

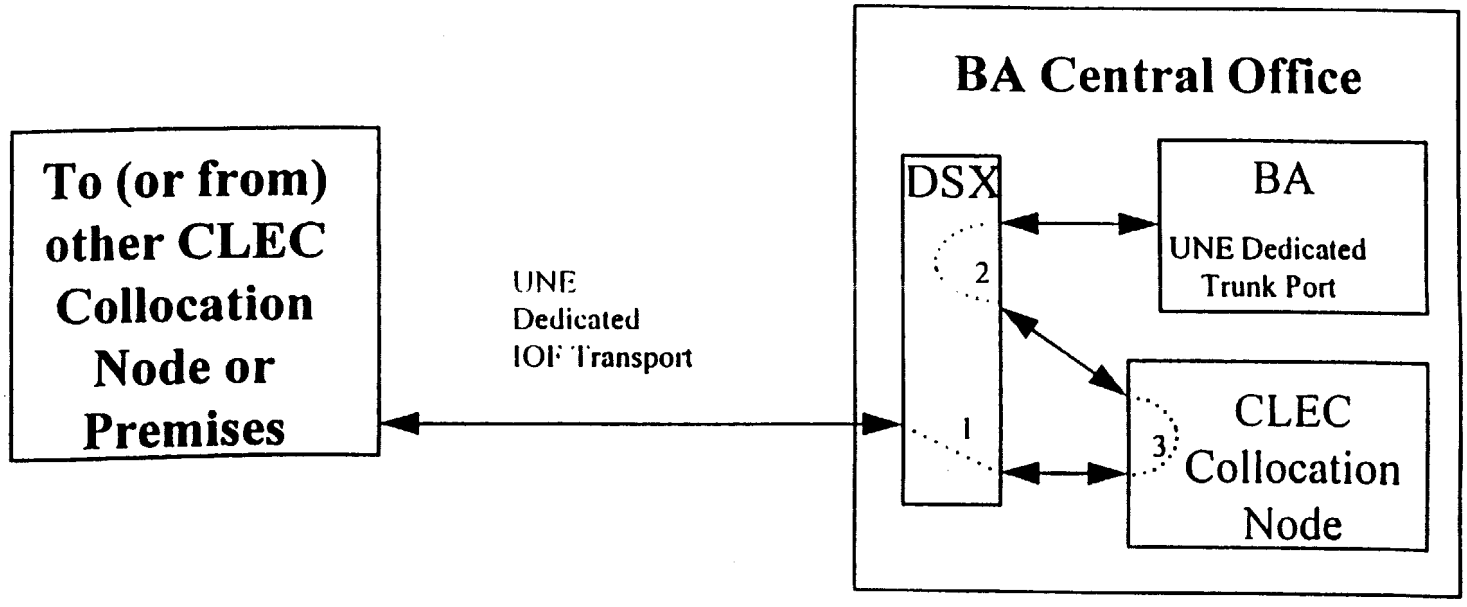


1) BA connects unbundled dedicated IOF transport to CLEC collocation node

2) BA connects unbundled dedicated trunk port to CLEC collocation node

3) CLEC performs applicable muxing and cross-connects as appropriate within its collocation node

NOTE: DSX stands for Digital Signal Cross-connect

## ❖ *Unbundled Dedicated IOF Transport and Unbundled Dedicated Trunk Port*

- ORDERING
  - CLEC orders unbundled dedicated IOF transport through an ASR with appropriate CFA specified.
  - CLEC orders unbundled dedicated trunk port through an ASR with appropriate CFA specified.
  - CLEC specifies due date for each element on applicable ASR based on normal intervals.

Bell Atlantic

## ❖ *Unbundled Dedicated IOF Transport and Unbundled Dedicated Trunk Port*

- PROVISIONING
  - Bell Atlantic connects the unbundled dedicated IOF transport to the collocation cross connect.
  - Bell Atlantic connects the unbundled dedicated trunk port to the collocation cross connect.
  - Bell Atlantic notifies the CLEC when the work for each element is completed.
  - CLEC performs any applicable muxing and connects the two elements at its collocation arrangement. (Note, CLEC may pre-connect elements.)

Bell Atlantic

## ❖ *Unbundled Dedicated IOF Transport and Unbundled Trunk Port*

- BILLING
  - Bell Atlantic bills UNEs as separate, individual elements.
  - CLEC is billed for unbundled dedicated IOF transport and collocation cross connection charges.
  - CLEC is billed for unbundled dedicated trunk port and collocation cross connection charges.
  - Both unbundled transport and trunk port bills are generated from CABS.

# Staff Recommendation (Migration Phases 1 to 2)

New Service with UNE Loop & UNE Port

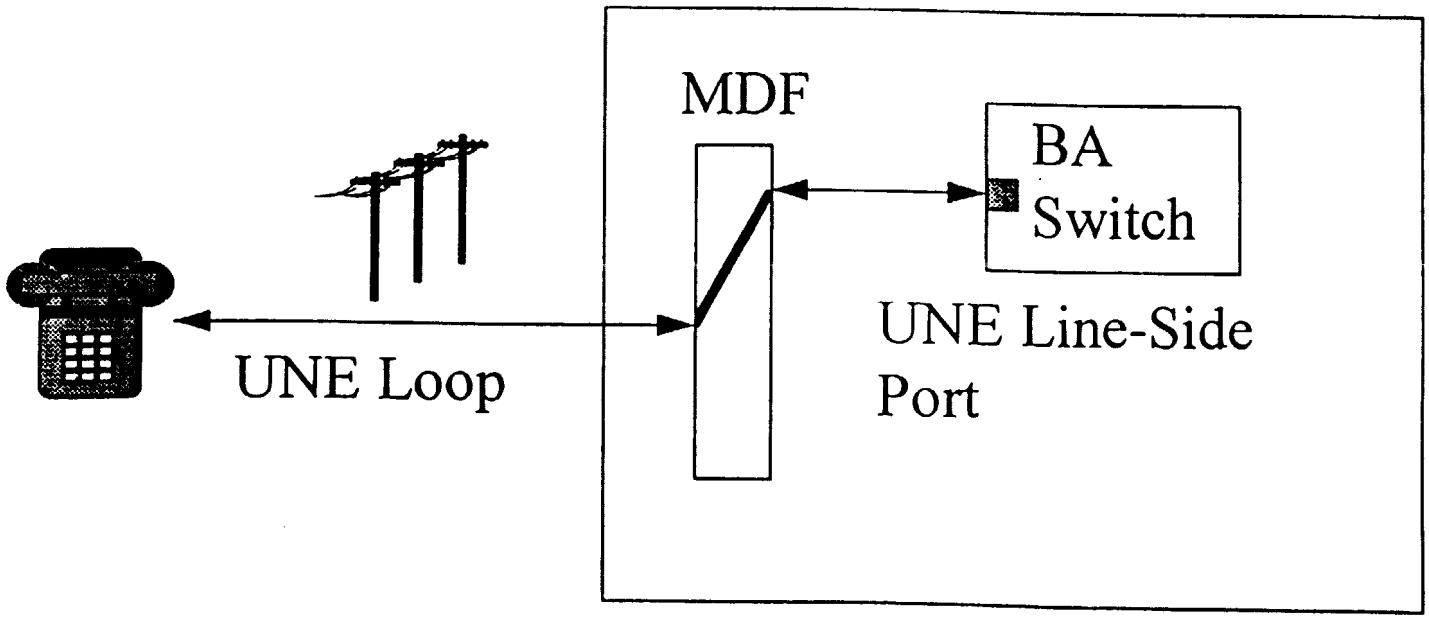


1) Create connections to existing Main Distribution Frame
2) Reprogram ILEC switch for LLC, DA, OS

# Staff Recommendation (Migration Phases 1 to 2)

Conversion of existing customer end user to UNEs

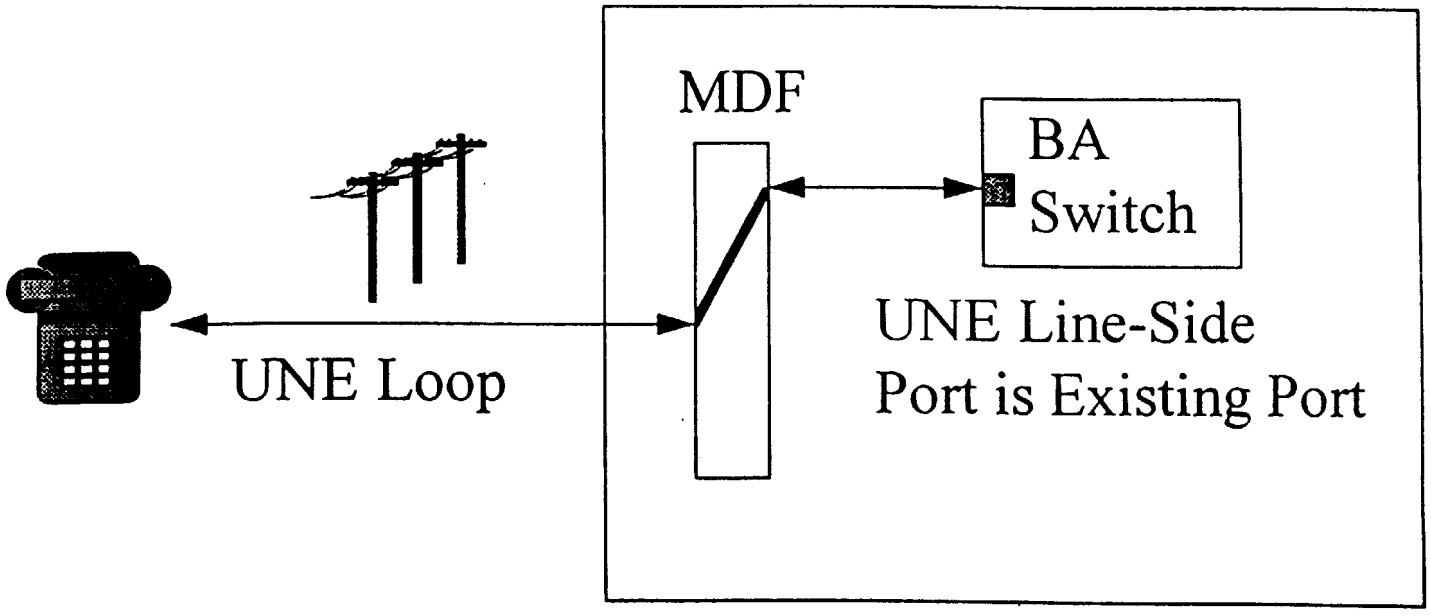


1) Leave existing connections to Main Distribution Frame in place
2) Reprogram ILEC switch for LLC, DA, OS

## Staff Recommendation (Migration Phases 1 to 2)

Unbundled Dedicated Inter-Office Facility Transport
and Unbundled Dedicated Trunk Port

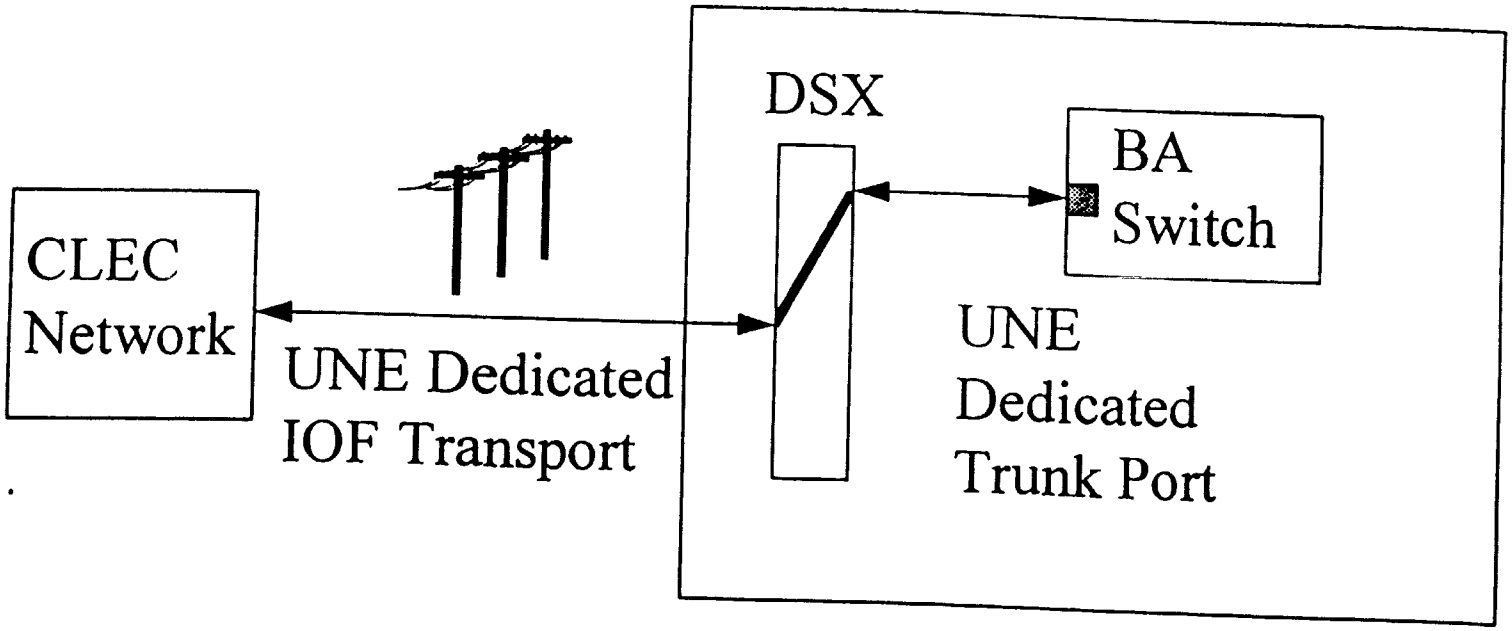


1) Leave existing connections to DSX or other suitable transport interconnect device (fiber MUX or terminal, digital cross connect electronic) in place.

# The Commonwealth of Massachusetts

## DEPARTMENT OF PUBLIC UTILITIES

March 13, 1998

D.P.U./D.T.E. 96-73/74, 96-75, 96-80/81, 96-83, 96-94-Phase 4-E

Consolidated Petitions of New England Telephone and Telegraph Company d/b/a Bell Atlantic-Massachusetts, Teleport Communications Group, Inc., Brooks Fiber Communications, AT&T Communications of New England, Inc., MCI Communications Company, and Sprint Communications Company, L.P., pursuant to Section 252(b) of the Telecommunications Act of 1996, for arbitration of interconnection agreements between Bell Atlantic-Massachusetts and the aforementioned companies.

---

APPEARANCES: Bruce P. Beausejour, Esq.
185 Franklin Street, Room 1403
Boston, MA 02107

-and-

Robert N. Werlin, Esq.
Keegan, Werlin & Pabian, LLP
21 Custom House Street
Boston, MA 02110
FOR: NEW ENGLAND TELEPHONE & TELEGRAPH COMPANY D/B/A BELL ATLANTIC-MASSACHUSETTS
Petitioner

Keith J. Roland, Esq.
Roland, Fogel, Koblenz & Carr, LLP
1 Columbia Place
Albany, New York 12207

-and-

Paul Kouroupas, Esq.
David Hirsch, Esq.
Regulatory Affairs
1133 21st Street, N.W., Suite 400
2 Lafayette Centre
Washington, DC 20036
FOR: TELEPORT COMMUNICATIONS GROUP, INC.
Petitioner

Todd J. Stein, Esq.
2855 Oak Industrial Drive
Grand Rapids, MI 49506-1277
FOR: BROOKS FIBER COMMUNICATIONS OF MASSACHUSETTS, INC.
Petitioner

Jeffrey F. Jones, Esq.
Jay E. Gruber, Esq.
Laurie S. Gill, Esq.
Palmer & Dodge
One Beacon Street
Boston, MA 02108

-and-

Michael J. Morrissey, Esq.
Eleanor R. Olarsch, Esq.
32 Avenue of the Americas
Room 2700
New York, NY 10013
FOR: AT&T COMMUNICATIONS OF NEW ENGLAND, INC.
Petitioner

Alan Mandl, Esq.
Ottenberg, Dunkless, Mandl & Mandl
260 Franklin Street
Boston, MA 02110

-and-

Hope Barbulescu. Esq.
One International Drive
Rye Brook. New York 10573
FOR: MCI TELECOMMUNICATIONS CORPORATION
Petitioner

Cathy Thurston. Esq.
1850 M Street. N.W.. Suite 1110
Washington. D.C. 20036
FOR: SPRINT COMMUNICATIONS COMPANY L.P.
Petitioner

L. Scott Harshbarger. Attorney General
By: Daniel Mitchell
Assistant Attorney General
Public Protection Bureau
Regulated Industries Division
200 Portland Street. 4th Floor
Boston. MA 02114
Intervenor

## I. INTRODUCTION

This Order concerns an arbitration proceeding held pursuant to the Telecommunications Act of 1996 ("the Act"). 47 U.S.C. § 252. The proceeding is a consolidated arbitration between New England Telephone and Telegraph Company, d/b/a Bell Atlantic ("Bell Atlantic", formerly "NYNEX") and its competitors, AT&T Communications of New England ("AT&T"), Brooks Fiber Communications of Massachusetts, Inc. ("Brooks Fiber"), MCI Telecommunications Corporation ("MCI"), Sprint Communications Company L.P. ("Sprint"), and Teleport Communications Group, Inc. ("TCG").

On December 4, 1996, the Department of Public Utilities (now, Department of Telecommunications and Energy, or "Department") issued an order in this proceeding ("Phase 4 Order") which set forth our rulings with regard to the method to be used by Bell Atlantic in carrying out total element, long-run, incremental cost ("TELRIC") studies to determine the prices to be charged by Bell Atlantic to competing local exchange carriers ("CLECs") for the use of unbundled network elements ("UNEs").[1] The Department followed the method set forth by the Federal Communications Commission ("FCC") in its First Report and Order dated August 8, 1996 ("Local Competition Order"). (A companion order, the "Phase 2 Order", set forth our rulings with regard to the wholesale discount to be applied to

---

[1] 47 U.S.C. § 153 defines network element as "a facility or equipment used in the provision of a telecommunications service." 47 U.S.C. § 251(c)(3) obligates incumbent local exchange carriers to provide access to network elements on an unbundled basis to any requesting telecommunications carrier, subject to certain conditions.

the purchase by CLECs of NYNEX retail services.) On February 5, 1997, in response to motions for clarification, recalculation, and reconsideration, the Department issued a second order ("Phase 4-A Order") with regard to the TELRIC studies and directed Bell Atlantic to submit cost studies in compliance with that Order. Most aspects of that TELRIC compliance filing (and all parts of the compliance filing with regard to resold services) were approved by the Department on May 2, 1997 ("Phase 2-B, 4-B Order"), and the remaining aspects of the TELRIC compliance filing were approved on June 27, 1997 ("Phase 4-D Order"). As part of this consolidated arbitration proceeding, the Department is currently reviewing a number of other TELRIC studies submitted by Bell Atlantic, those related to collocation, dark fiber, non-recurring charges for resold services and UNEs, and operation support systems ("OSS") for resold services and UNEs.

On November 18, 1997, Bell Atlantic informed the Department by letter that it was withdrawing one rate element -- the customer interface panel ("CIP") -- from its collocation cost study. The CIP is a digital cross-connect panel that was to have been offered by Bell Atlantic to connect individual UNEs to each other as specified by a CLEC. In its letter, Bell Atlantic asserted that in light of recent decisions by the United States Court of Appeals for the Eighth Circuit ("the Eighth Circuit Decision")[2], the Company was not required to combine UNEs on behalf of competing carriers and that it therefore declined to do so. AT&T and Sprint, on November 21 and 25, 1997, respectively, responded to Bell Atlantic's

---

[2] Iowa Utilities Board, et al. Petitioners, v. Federal Communications Commission; United States of America, Respondents, 120 F.3d 753 (8th Cir., July 18, 1997, as amended on rehearing on October 14, 1997) (1997).

letter arguing that, notwithstanding the Eighth Circuit Decision, Bell Atlantic should be required to offer combinations of UNEs in Massachusetts.

On December 16, 1997, the Department held an evidentiary hearing on facts concerning the logistical and technical aspects of how a CLEC would order and how Bell Atlantic would provide uncombined UNEs and how the CLEC would arrange for the combination of those uncombined UNEs (Tr. 20, at 34-35). Bell Atlantic presented Amy Stern, director of product development for Bell Atlantic wholesale services (Tr. 25, at 7-126). AT&T presented Robert V. Falcone, division manager, local services division (Tr. 25, at 127-158).

Initial briefs were filed by Bell Atlantic, AT&T, MCI, and Sprint on January 9, 1998. Reply briefs were filed by these parties on January 16, 1998.[3]

The parties raise two types of arguments. The first is whether the state has been preempted by the Eighth Circuit Decision from requiring Bell Atlantic to offer UNE combinations. The second is whether, in light of Bell Atlantic's agreement to offer UNE combinations in earlier stages of the interconnection negotiations, it is now contractually bound by that agreement, notwithstanding the Eighth Circuit Decision.

## II. THE PREEMPTION QUESTION

### A. Positions of the Parties

Bell Atlantic first notes that the Eighth Circuit found that the FCC's rule requiring incumbent local exchange companies ("ILEC") to recombine UNEs "cannot be squared with

---

[3] Brooks Fiber and Teleport did not file briefs in this matter.

the terms of subsection 251(c)(3) [of the Act]," and that a rule which prohibits an ILEC, such as Bell Atlantic, from separating UNEs that it may currently combine "is contrary to" that same subsection. While Bell Atlantic recognizes that a state may impose interconnection requirements on an ILEC that are not specifically mentioned in the Act, it further notes that subsection 261(c) of the Act provides that such state requirements cannot be inconsistent with the Act or with the FCC's regulations to implement the Act. Because the Court has found that an FCC requirement to offer combined UNEs "cannot be squared with" and "is contrary to" the requirements of Section 251, Bell Atlantic asserts therefore that any attempt by the state to order such a requirement would likewise be inconsistent with the Act (Bell Atlantic Initial Brief at 11-12).

Bell Atlantic further argues that the CLECs cannot attack the Eighth Circuit Decision collaterally before the Department and thereby seek, in essence, to reimpose unlawful FCC rules. It argues that the appropriate forum for review of the Eighth Circuit's Decision and this issue is the Supreme Court. Bell Atlantic asserts that the doctrine of collateral estoppel or issue preclusion is plain and applicable in this situation. It notes that AT&T, MCI, Sprint, and Bell Atlantic were all parties to the Eighth Circuit proceeding, and that Court has issued a valid final judgment deciding the question of law surrounding the recombination of UNEs. That decision, argues Bell Atlantic, is binding on those parties, and they should be precluded from relitigating this issue in the hope of attaining an inconsistent decision in another forum (id. at 11-13). Bell Atlantic argues that the Eighth Circuit decision to strike down the FCC's rules is equally applicable to a state's attempt to impose the same

requirements because the rules, in whatever jurisdiction, are contrary to the Act (Bell Atlantic Reply Brief at 1).

The CLECs in this case argue that the Department has the authority to require Bell Atlantic to offer combined UNEs pursuant to state law. Sprint, for example, argues that the Eighth Circuit Decision confirms the authority of the state to decide the issue of UNE combinations, noting that the Court recognized that "Congress intended to preserve the state's traditional authority to regulate local telephone markets . . . so long as the state rules are consistent with the requirements of section 251 and do not substantially prevent the implementation of the section 251 or the purposes of Part II" of the Act (Sprint Initial Brief at 6). Sprint further notes that the Eighth Circuit ruling was more narrow than that argued by Bell Atlantic. That ruling, argues Sprint, was a finding with regard to an FCC rule, and was not a ruling on whether any state-imposed requirement that furthers the pro-competitive policies of a state is consistent with the Act (Sprint Reply Brief at 2-4).

AT&T offers similar arguments. The Company notes that the Eighth Circuit's ruling regarding UNE combinations dealt only with a narrow question of federal law, whether the FCC had the authority under the act to require ILECs to provide UNE combinations. It argues that no question of state regulatory authority was at issue in the Eighth Circuit Decision. The Court did not have before it, and therefore did not rule on, any efforts by states acting pursuant to state law to impose obligations on ILECs beyond those provided by Section 251 of the Act. In fact, notes AT&T, the Court was explicit in acknowledging this fact, leaving "to another day any determination of whether a specific state access or

interconnection regulation is inconsistent with the Section 251 or substantially prevents the implementation of Section 251 or Part II" (AT&T Initial Brief at 13-14, citing Iowa Utilities Board, 120 F.3d at 807, n.27).

AT&T asks us to recognize that Bell Atlantic is not arguing that the provision of UNE combinations is illegal; rather Bell Atlantic is arguing that it is beyond the authority of any state or federal regulator to require it to provide such combinations when it does not choose to do so. This position, says AT&T, is unsupported by the Act or the Eighth Circuit's Decision (id. at 17). AT&T explains that if it is not inconsistent with the Act for Bell Atlantic voluntarily to provide a UNE combination, then it cannot be inconsistent with the Act for a state commission, acting under independent state law, to impose a requirement that it do so (id. at 18).

MCI also offers the view that the Eighth Circuit Decision was narrowly focused, finding that the FCC could not rely on subsection 251(c)(3) of the Act as a source of authority to promulgate rules requiring ILECs to combine UNEs. Nothing in the decision, argues MCI, prohibits a state commission, acting independently of the Act and pursuant to state authority, from requiring an ILEC to combine UNEs at the request of a CLEC (MCI Initial Brief at 10). As a general matter, says MCI, various sections of the Act expressly acknowledge independent state authority to regulate telecommunications services. Hence, the Department is not precluded from directing Bell Atlantic to combine UNEs at a CLEC's request (MCI Initial Brief at 11-12). This authority, argues MCI, is inherent in the Department's jurisdiction, as codified in G.L. c. 159 (id. at 14-16).

B. Analysis and Findings

There is no disagreement that the Eighth Circuit's Decision, unless overturned by the U.S. Supreme Court,[4] precludes the FCC from requiring an ILEC to offer UNE combinations to a CLEC. Likewise, there is no disagreement that an ILEC can voluntarily offer UNE combinations to a CLEC. The disagreement rather is whether the Act permits this Department, acting under the broad authority granted to it by the General Court, to order an ILEC to do something which the FCC, under the Act, cannot order.

We begin by quoting the relevant portion of the Eighth Circuit Decision in its entirety.

> Combination of Network Elements
>
> We also believe that the FCC's rule requiring incumbent LECs, rather than the requesting carriers, to recombine network elements that are purchased by the requesting carriers on a unbundled basis, 47 C.F.R. § 51.315(c)-(f), cannot be squared with the terms of subsection 251(c)(3). The last sentence of subsection 251(c)(3) reads, "An incumbent local exchange carrier shall provide such unbundled network elements in a manner that allows requesting carriers to combine such elements in order to provide such telecommunications service." 47 U.S.C.A. § 251(c)(3) (emphasis added). This sentence unambiguously indicates that requesting carriers will combine the unbundled elements themselves. While the Act requires incumbent LECs to provide elements in a manner that enables the competing carriers to combine them, unlike the Commission, we do not believe that this language can be read to levy a duty on the incumbent LECs to do the actual combining of elements. The FCC and its supporting intervenors argue that because the incumbent LECs maintain control over their networks it is necessary to force them to combine the network elements, and they believe that the incumbent LECs would prefer to do the combining themselves to prevent the competing carriers from interfering with their networks. Despite the Commission's arguments, the plain meaning of the Act indicates that the requesting carriers will combine the unbundled elements themselves:

---

[4] On January 12, 1998, the U.S. Supreme Court agreed to review the Eighth Circuit Decision.

> the Act does not require the incumbent LECs to do all of the work. Moreover, the fact that the incumbent LECs object to this rule indicates to us that they would rather allow entrants access to their networks than have to rebundle the unbundled elements for them.
>
> Section 251(c)(3) requires an incumbent LEC to provide access to the elements of its network only on an unbundled (as opposed to a combined) basis. Stated another way, § 251(c)(3) does not permit a new entrant to purchase the incumbent LEC's assembled platform(s) of combined network elements (or any lesser existing combination of two or more elements) in order to offer competitive telecommunications services. To permit such an acquisition of already combined elements at cost based rates for unbundled access would obliterate the careful distinctions Congress has drawn in subsections 251(c)(3) and (4) between access to unbundled network elements on the one hand and the purchase at wholesale rates of an incumbent telecommunications retail services for resale on the other. Accordingly, the Commission's rule, 47 C.F.R. § 51.315(b), which prohibits an incumbent LEC from separating network elements that it may currently combine, is contrary to § 251(c)(3) because the rule would permit the new entrant access to the incumbent LEC's network elements on a bundled rather than an unbundled basis.
>
> Consequently, we vacate rule 51.315(b)-(f) as well as the affiliated discussion sections.

Iowa Utilities Board, 120 F.3d at 813.

We also quote the section of the Act concerning reservation of state authority.

Subsection 261(c), entitled "Additional State Requirements," provides that:

> Nothing in this part [i.e., Part II, comprising sections 251 to 261] precludes a State from imposing requirements on a telecommunications carrier for intrastate services that are necessary to further competition in the provision of telephone exchange service or exchange access, as long as the State's requirements are not inconsistent with this part or the [FCC's] regulations to implement this part.

Subsection 261(c) negates any inference or argument that Congress sought to occupy the telecommunications field entirely and thereby to oust the states from any, even interstitial, regulation. See e.g., Campbell v. Hussey, 368 U.S. 297 (1961). But insofar as the Act does speak to a particular question, there must be no conflict between a state's

actions and the Congressional enactment in order for state regulation to be permitted to supplement Federal requirements. Florida Lime & Avocado Growers v. Paul, 373 U.S. 132 (1963); Rice v. Santa Fe Elevator Co., 331 U.S. 218 (1947). Where, however, state action conflicts with a Congressional act governing interstate commerce, state action is invalid. Warren Trading Post Co. v. Arizona Tax Commission, 380 U.S. 685 (1965).

Thus, as a general matter, some measure of state authority is reserved by the Act; but we would need to address whether, given this well-known principle of federalism and the Commerce Clause, U.S. Const. Art. I, § 8, cl. 3, restated in subsection 261(c), a determination by the Department to require the provision of UNE combinations would be inconsistent with subsection 251(c)(3) of the Act.

On the general question of state authority, it is quite clear that the Department has authority to rule on issues central to the furtherance of telecommunications competition in the state. The Department is granted broad supervisory authority over telecommunications companies in G.L. c. 159. No one claims that the Act preempts Chapter 159; nor have we the power so to find. Spence v. Boston Edison Co., 390 Mass. 604, 610 (1983); Dispatch Communications of New England, D.P.U./D.T.E. 95-59-B/95-80/95-112/96-13, at 12 n.11 (1998). The question is what scope the Act and Chapter 159 together afford this Commission for action on the UNE question. In particular, Sections 12 and 16 of G.L. c. 159 provide that the Department may inquire into and adjust the regulations and practices of telecommunications carriers in the state. That authority was used over a decade ago to introduce competition in the state. IntraLATA Competition, D.P.U. 1731 (1985). Since that

time. Chapter 159 has undergirded other principles established by the Department. See e.g., New England Telephone, D.P.U. 93-125 (1994); New England Telephone, D.P.U. 94-50 (1995). If it is clear that the issue of UNE combinations is relevant to the public policy goals we have set forth in the past, it would be appropriate for us to consider that issue under the broad authority granted to us by the General Court, subject to the restriction that our rulings not be inconsistent with the Act.

In this case, the Eighth Circuit Decision guides our finding. We agree with the CLECs that the Court did not expressly address the issue of state authority over UNEs in its decision. The specific issue raised was whether the FCC had the authority to order ILECs to combine UNEs, and the Court found that the FCC did not have that authority. However, in reaching the conclusion that the FCC exceeded its authority, the Eighth Circuit based its reasoning on the requirements of the Act -- not just the identity of the agency issuing the rules -- and therefore, the Court's reasoning could be applied with equal force to any similar rule or decision issued by the Department. The Department notes that the Eighth Circuit Decision is being debated widely across the country, and that the question of its applicability to the states is central to this debate.[5]

In light of the Eighth Circuit Decision and ensuing debate, the Department finds that

---

[5] To date, five states have addressed this issue, four of which have declined to find that the Act prohibits ILECs from providing UNE combinations. See Michigan Public Service Commission, Case No. U11551 (1998); Idaho Public Utilities Commission, Order No. 27236 (1997); Public Utility Commission of Texas, PUC Docket Nos. 16189, et al. (1997); Public Utilities Commission of Ohio, Case No. 96-922-TP-UNC (1997). Compare Public Service Commission of Maryland, Case No. 8731 Phase II(c).

it would not be productive in achieving our larger goal of completing the arbitrations to challenge the Eighth Circuit conclusion by requiring Bell Atlantic to combine UNEs in the exact manner prescribed by the FCC and proscribed by the Court. Therefore, we are ordering the parties back to negotiations as discussed further below.

We must address another important concern with respect to UNEs before we proceed to the negotiation and contractual issues raised by the parties in this proceeding. Relying upon the evidence brought forth in this proceeding, AT&T has succinctly set forth a number of consequences of the manner in which Bell Atlantic proposes to require a CLEC to combine UNEs, i.e., through the use of collocation facilities in every central office in which the CLEC chooses to purchase this array of services. We quote from AT&T's Initial Brief:

> First, the end result of all of Bell Atlantic's proposed network rearrangements is to recreate precisely the same service functionality that the customer had to begin with. No improvement in service quality or network efficiency is created by any of this network reengineering. See, e.g., Tr. Vol. 25, pp. 67-68. To the contrary, there will be a material degradation of service quality. Every additional interconnection is a potential point of failure. Tr. Vol. 25, pp. 66, 146. The multiple human and computer coordinations required to "hot cut" service to a CLEC customer will inevitably result in service interruptions. See, e.g., Tr. Vol. 25, pp. 82-83, 144-146.
>
> Bell Atlantic's proposed network reengineering requirements will result in substantial additional (and totally unnecessary) costs, almost all of which will be imposed on the CLECs. There will be substantial costs incurred to establish physical collocation facilities at every Bell Atlantic central office by every CLEC that wishes to purchase UNEs. There will be multiple "SAC" [service access charge] charges and nonrecurring charges for the central office interconnections. Tr. Vol. 25, pp. 11, 14. There will be undetermined but undoubtedly significant costs to "overlay" copper feeder plant where a fiber

> feeder link is already in place (or, alternatively, even greater cost for "expensive" demultiplexing equipment). Tr. Vol. 22, pp. 46-47, see also Tr. Vol. 25, pp. 103, 104.
>
> Finally, Bell Atlantic's policy will ensure that no CLEC order for UNEs will ever be able to flow through Bell Atlantic's ordering and provisioning OSSs [operational support systems] in the way that Bell Atlantic's own customer orders will flow through. See, e.g., Tr. Vol. 21, pp. 95-98; Tr. Vol. 22, pp. 53; Tr. Vol 25, pp. 39-40, 89. This fact has both quality of service and cost consequences. Bell Atlantic's OSSs are designed to provide service ordering and provisioning on an electronic basis with a minimum of human intervention. The new policy will ensure that CLECs, unlike Bell Atlantic, never have the benefits of the electronic flow through systems. Thus, while Bell Atlantic can provide service to its own new customer for a one-time charge of $13.88 (Tr. Vol. 22, pp. 34, 63), it will impose literally hundreds of dollars in NRC [nonrecurring charges], OSS and collocation charges on a CLEC wishing to provide the same service to the same customers. See Tr. Vol. 21, pp. 102-106.
>
> In conclusion, it cannot be overemphasized that all of the foregoing service quality and cost consequences are totally unnecessary. See, e.g., Tr. Vol. 21, pp. 96-98, Tr. Vol. 25, pp. 43-44. They result in no service improvement, no increase in functionality, no increase in network efficiency. They simply make it more expensive and more difficult for Bell Atlantic's competitors to serve their customers.

AT&T Initial Brief, at 9-10 (emphasis and footnote omitted).

Similar points were raised by MCI and Sprint, and these consequences are uncontroverted. Bell Atlantic has left them unaddressed and chosen instead to rely on purely legal arguments in support of the policy decision it urges upon us. Those legal arguments we have already addressed. We cannot, however, ignore the consequences, since they have important implications for the successful introduction of competition in Massachusetts, a major goal of the Department. Bell Atlantic's response to the Eighth Circuit Decision does not advance our or the Act's policy to create efficiency-enhancing conditions that would

allow local exchange competition to develop and to deliver price and service benefits to customers. Consequently, Bell Atlantic's policy is not conducive to its own goal of receiving authority from the FCC, under Section 271 of the Act, to originate interLATA calls in Massachusetts.[6]

We believe, based on the record in this case, that Bell Atlantic's chosen method of provisioning UNEs solely through collocation may not be adequate to meet the Act's UNE provisioning requirements in Subsection 251(c)(3). We cannot approve an arbitrated agreement that contains provisions not consistent with the Act's Section 251 requirements. While it is true that the Eighth Circuit found that the FCC may not require ILECs to combine network elements, the Eighth Circuit also found that "a requesting carrier may achieve the capability to provide telecommunications services completely through access to the unbundled elements of an incumbent LEC's network,"[7] and that a requesting carrier is not required "to own or control some portion of a telecommunications network before being able to purchase unbundled elements."[8] Based on the record, it is clear that collocation requires a competing carrier to own a portion of a telecommunications network, so making collocation a precondition for obtaining UNEs appears to be at odds with the Eighth Circuit's

---

[6] Under the Act, Bell Atlantic must notify this Department of its intent to seek Section 271 certification from the FCC when it requests the right to offer intra-region, interLATA, long-distance service. The Act gives this Department the obligation and the right to comment on that filing to the FCC. 47 U.S.C. § 271(d)(2)(B).

[7] Iowa Utilities Board, 120 F.3d at 814.

[8] Id.

findings.[9] Therefore unless Bell Atlantic can demonstrate convincingly that its collocation requirement is consistent with the Act and the Eighth Circuit's findings, it must develop an additional, alternative or supplemental method for provisioning UNEs in such a way that they can be recombined by competing carriers without imposing a facilities-requirement on those carriers. Without this additional method, we believe that Bell Atlantic's insistence on collocation as the only answer to the UNE question very well may not meet the Act's Section 251 interconnection requirements as they relate to the provisioning of UNEs, and, consequently, that Bell Atlantic might not meet the requirements of the Section 271 interconnection "checklist." Opportunity remains, however, to avert so untoward an outcome.

In light of the Eighth Circuit Decision, Bell Atlantic might consider a different approach -- an approach alternative or supplemental to collocation. Recognizing the network efficiencies that would result from combining UNEs in the manner proposed by the CLECs -- the method Bell Atlantic had planned to use for the months leading up to the ruling, using OSSs designed precisely for this purpose -- Bell Atlantic still may voluntarily agree to provide such combinations. Indeed, such voluntary recombination by an ILEC might well

---

[9] The FCC states that it is "still evaluating the implications of these rulings and whether they may compel a result that would require methods other than or in addition to collocation for combining network elements." FCC 97-418, Memorandum Opinion and Order, CC Docket No. 97-208, released December 24, 1997, ¶ 199 ("FCC South Carolina Order").