DOCKET FILE COPY ORIGINAL
RECEIVED
OCT - 5 1998
FEDERAL COMMUNICATIONS COMMISSION
OFFICE OF THE SECRETARY

**Before the**
**Federal Communications Commission**
**Washington, D.C. 20554**

| | | |
|---|---|---|
| In the Matter of | ) | |
| | ) | |
| Deployment of Wireline Services Offering Advanced Telecommunications Capability, et al. | ) ) ) | CC Docket Nos. 98-147/98-11, 98-26, 98-32, 98-78, 98-91, and CCB/CPD No. 98-15, RM9244 |

To: The Commission

**OPPOSITION OF NETWORK ACCESS SOLUTIONS**
**TO PETITIONS FOR RECONSIDERATION**

Network Access Solutions, Inc. ("NAS") opposes the petitions of Bell Atlantic and SBC requesting that the Commission reverse its decision to require that incumbent LECs ("ILECs") remove load coils or bridge taps from a voice-grade loop when requested by a competing carrier in order to permit the loop's use in providing DSL service. Petitioners claim that the Commission's decision requiring that ILECs remove coils and taps is illegal under an Eighth Circuit ruling that prohibits the FCC from mandating that a LEC provide "superior quality access to network elements" than the LEC provides to itself.[1] In fact, we show below that the FCC's ruling is not prohibited by the Eighth Circuit's order. We also show that reversing the FCC's ruling would be tantamount to giving some ILECs, including Bell Atlantic, a *de facto* monopoly in DSL service in their respective exchange areas.

1. Bell Atlantic Pet. at 3-4 and SBC Pet. at 4 (quoting from *Iowa Util. Bd. v. FCC*, 120 F.3d 753, 812 (8th Cir. 1997), *cert. granted*, 118 S.Ct. 879 (1998)).

0010536.01

No. of Copies rec'd 0+4
List ABCDE

## BACKGROUND

NAS plans to begin providing DSL service on a commercial basis within Bell Atlantic's exchange territory this fall. In order to offer service, NAS requires that Bell Atlantic provide it with loops, collocation arrangements, and OSS. Since July, NAS has applied for collocation arrangements in 62 central offices in five states and the District of Columbia. Ten of those arrangements should be in place by the end of this year.

Last November, Bell Atlantic defined the technical specifications that a loop must meet in order for a carrier to provide DSL service on that loop. Those specifications are based to a significant extent on a cooperative work effort between Bell Atlantic and NAS that began in May 1997 and culminated this past summer in a three month DSL trial. NAS will provide DSL service in accordance with Bell Atlantic's specifications.

The Bell Atlantic DSL specifications provide that a voice-grade loop can be used to provide DSL service if the loop contains (i) less than 18,000 feet of copper, including the length of bridge taps, and (ii) no load coils.[2] A copy of the specifications is attached as Exhibit No. 1.

## DISCUSSION

### I. Requiring ILECS to Remove Load Coils or Bridge Taps from a Loop in Order to Make that Loop DSL-Compatible Is Lawful Since the Resulting Loop is Neither Created from an "Unbuilt" Network Nor "Superior to Loops Used by the ILEC Itself

The Commission should deny the petitioners' request for exemption from the obligation to remove coils or taps from a loop at the request of a competing carrier in order to make

2. *See* Bell Atlantic Tech. Ref. 72575, Issue 2 (Draft 3, Nov. 1997).

the loop DSL-compatible since requiring that ILECs perform these functions does not force them to engage in the kind of activity that the Eighth Circuit found to be outside of an ILEC's responsibility in providing loops. The Eighth Circuit held that the FCC may not require an ILEC to provide a particular loop only when the requested loop is both (i) presently "unbuilt" rather than part of the ILEC's "existing" network and (ii) "superior [in] quality" to that which the ILEC uses itself.[3] The FCC's ruling requiring ILECs to comply with a carrier's request to remove coils or taps from a loop in order to make it DSL-compatible meets neither condition. First, the ruling plainly mandates that the ILEC take action with respect to its "existing network" rather than an "unbuilt" one. Moreover, it does not require that the ILEC provide a "superior quality" loop to that which the ILEC itself uses since removal of coils or taps merely conforms the loop to the longstanding Bellcore technical specification applicable to loops used for telephony. Under that Bellcore standard, no loop used for telephony containing less than 18,000 feet of copper, including bridge taps, should contain any load coil.[4] A copy of this Bellcore standard is attached as Exhibit No. 2.

Requiring an ILEC to remove coils or taps also does *not* constitute an unlawful demand to provide a superior quality loop because ILECs remove coils and taps from loops for their own business. For example, ILECs often remove coils when deploying digital loop concentrators ("DLCs") in order to provide regular telephone service to new housing developments since the distribution portion of a loop provisioned through a DLC technologically cannot contain

---

3. *Iowa Util. Bd. v. FCC, supra*, 120 F.3d at 813.

4. *See* BOC Notes on the LEC Networks - 1994, Issue 2, SR-TSV-002275 (April 1994).

any coils. ILECs also occasionally must remove coils from loops to serve their own DSL customers, even though doing so should not be necessary given the Bellcore technical specification for telephony loops discussed above, since ILECs sometimes place coils on loops used to provide telephony in violation of the Bellcore specification. ILECs sometimes must remove coils or taps in order to provide T-1 service too since some methods of providing T-1 cannot be provided over a loop with coils or excessive taps.[5]

## II. Granting the Petitions is Not in the Public Interest Since a Grant Would Permit Some ILECs, Including Bell Atlantic, to Monopolize the DSL Market

Granting the petitions also would be contrary to the public interest because it could permit Bell Atlantic to squelch DSL competition by dividing the DSL market into two segments and using a different strategy to frustrate competition in each segment. The first segment of the DSL

---

5. Even if mandating the removal of coils or taps for a competitor unlawfully required the ILEC to provide a superior loop to the competitor if the ILEC had never removed coils or taps for its own business (which it does not do as shown above), the Commission still should reject GTE's proposal for how to determine when an ILEC would be deemed not to have removed these facilities for its own business. Under the GTE proposal, an ILEC would be deemed not to have removed taps or coils if it had not previously removed such facilities from another loop terminating in the same central office where the competitor's loop terminates. Comments of GTE at 3-4. The FCC should reject this proposal for two reasons. First, it is not obvious that making this determination on a central office by central office basis is rational, and GTE offers no explanation for why it thinks doing so would be rational. Moreover, adopting GTE's proposal would be contrary to the public interest because it would create a huge loophole in the obligation of ILECs to provide network elements. Deeming an ILEC to provide a superior quality loop unless the ILEC has removed taps or coils for its own purposes from loops terminating in the precise central office as the one where the competitor's loop terminates would be tantamout to exempting an ILEC from providing numerous types of network elements from a given central office merely because it has not provided those elements to itself from that particular central office even though it provides them to itself from other central offices.

market is the provision of DSL service over loops containing less than 10,000 feet of copper. This is the market segment in which Bell Atlantic itself participates. Bell Atlantic already has obtained substantial market power in this part of the market by prohibiting other carriers from placing DSL line cards in its remote terminals.[6] Roughly half of all loops having less than 10,000 feet of copper are provisioned through remote terminals. DSL service cannot technically be provided over a loop provisioned through a remote terminal unless a DSL line card is placed inside the remote terminal through which the loop is provisioned.

Bell Atlantic also has been able to obtain market power in the provision of DSL service over loops having less than 10,000 feet of copper by structuring its DSL offering in a manner that permits it to leverage, into that DSL market, its existing power in the exchange market. The company first ties its exchange and DSL offerings together by offering exchange and DSL service over a single loop and then prohibiting an end user desiring DSL service from retaining (or obtaining) Bell Atlantic's exchange service unless that user selects DSL service offered by Bell Atlantic rather than by another carrier.[7] The company also makes it virtually impossible for anyone

---

6. Bell's Atlantic's refusal to permit carriers to place line cards in its remote terminals violates Section 251(c)(6) of the Act. That provision requires ILECs to permit carriers to collocate their equipment at any technically feasible point. *Local Competition Order*, 11 FCC Rcd. 15499, ¶¶ 573-74 (1996). It is technically feasible for a carrier to collocate its DSL line cards in an ILEC's remote terminals.

7. *See* Comments of Network Access Solutions at 30-32 (CC Dkt. No. 98-147, filed Sept. 25, 1998).

to compete with its DSL service price by allocating no loop costs or DSLAM collocation costs to its DSL revenue requirement even though they are direct costs of providing DSL service.[8]

Granting the present petitions would permit Bell Atlantic to monopolize the second segment of the DSL market too. That segment consists of providing DSL service over loops having between 10,000 feet and 18,000 feet of copper. This is the only market segment that is open to Bell Atlantic's DSL competitors since Bell Atlantic already has foreclosed competition in providing service over loops having less than 10,000 feet of copper as explained above and since Bell Atlantic's DSL technical specifications prohibit provision of DSL over a loop having more than 18,000 feet of copper. Granting the present petitions would permit Bell Atlantic to monopolize this second part of the DSL market by giving it authority to deny carriers the specialized OSS information they need in the loop pre-ordering process. A carrier cannot provide DSL service to a given end user regardless of whether loops capable of serving that user contain coils or bridge taps unless the ILEC provides the carrier as part of OSS with a variety of information about those loops, as the FCC has recognized.[9] If the present petitions were granted, Bell Atlantic has hinted elsewhere that it would refuse to provide the necessary information to a carrier desiring to provide

---

8. *See* Bell Atlantic Telephone Companies Tariff No. 1, Trans. No. 1076, *Order Suspending Tariff and Designating Issues for Investigation*, CC Dkt No. 98-168 (Sept. 15, 1998) (ordering an investigation into whether Bell Atlantic's DSL service is interstate service but not into whether Bell Atlantic's failure to allocate any loop or collocation costs to its DSL offering constitutes unlawful discrimination even though seven parties, including NAS, had petitioned the agency to reject or suspend the tariff for failure to allocate any loop or collocation costs to its DSL offering).

9. *See Deployment of Wireline Services Offering Advanced Telecommunications Capability, Notice of Prop. Rulemaking* at ¶ 157 (FCC 98-188, rel. Aug. 7, 1998).

DSL over loops having more than 10,000 feet of copper. It would defend this action at the FCC by claiming that requiring it to provide this information to those carriers would unlawfully mandate that it provide its DSL competitors with superior quality OSS than the OSS than it provides to itself given that it provides this information to itself only for loops having less than 10,000 feet of copper.[10]

## CONCLUSION

The Commission should deny the petitions for reconsideration.

Respectfully submitted,

NETWORK ACCESS SOLUTIONS, INC.

By: _____

Rodney L. Joyce
J. Thomas Nolan
Shook, Hardy & Bacon, L.L.P.
801 Pennsylvania Avenue, N.W.
Suite 600
Washington, D.C. 20004
202-452-1450
Its Attorneys

October 5, 1998

---

10. *See* Bell Atlantic Comments at 45-46 (CC Dkt. No. 98-147, filed September 25, 1998).

EXHIBIT NO. 1

Bell Atlantic

TR 72575
Issue 2, November 1997

Bell Atlantic Technical Reference

# DRAFT 3

# Digital Unbundled Loop Services Technical Specifications

© 1997 Bell Atlantic Network Operations
All Rights Reserved
Printed in U.S.A.

# DRAFT 3

## Notice

This Technical Reference is published by Bell Atlantic to provide a technical description of Digital Unbundled Loop Services. To the extent feasible, the description references or duplicates existing published technical references utilized by the industry.

Bell Atlantic reserves the right to revise this technical reference for any reason including, but not limited to, changes in tariffs, laws, or regulations, conformity with updates and changes in standards promulgated by various agencies, utilization of advances in the state of technical arts, or the reflection of changes in the design of any facilities, equipment, techniques, or procedures described or referred to herein. Liability for difficulties arising from technical limitations or changes herein is disclaimed.

Bell Atlantic reserves the right not to offer any or all of these services and to withdraw any or all of them at any future time. In addition, the services described herein are based on available facilities and equipment and may not be universally available.

With respect to services offered pursuant to tariff, however, the terms and conditions of the service offering are determined by the tariff itself and applicable laws and regulations. This reference is intended to be supplemental to the tariffs. In the event of a conflict between the tariffs, laws or regulations and this reference, the tariffs, laws, and regulations shall govern.

For additional copies, please contact:

Bell Atlantic Document and Information Delivery Services
1310 N. Court House Road
Arlington, VA 22201
703-974- 5887

For information about the technical specifications in this TR, contact:

Trone Bishop
2E13
1 East Pratt Street
Baltimore, MD 21202
410-736-7622

# TR 72575, Issue 2, November 1997

# DRAFT 3

**Bell Atlantic Technical Reference**

**Digital Unbundled Loop Services**
**Technical Specifications**

**Contents** **Page**


1. General 3
2. Service Description 3
   A. General 3
   B. ISDN Basic Rate Unbundled Loop Service (IBRULS) 3
   C. DS1 Unbundled Loop Service (DS1ULS) 5
   D. Digital Data System Unbundled Loop Service (DDSULS) 6
   E. HDS L Unbundled Loop Service (HDULS) 7
      i. 2-Wire HDULS 7
      ii. 4-Wire HDULS 8
      iii. HDULS Limitations 8
   F. ADSL Unbundled Loop Service (ADULS) 9
      i. ADULS-R 9
      ii. ADULS-C 11
      iii. ADULS Limitations 12
3. Element Specifications 13
   A. General 13
   B. CODF Wiring and Tie Cable(s) 14
   C. DSX-1 Wiring and Repeatered Tie Cable(s) 14
   D. Subscriber Loop Facilities 15
      i. IBRULS 15
      ii. DS1ULS 17
      iii. DDSULS 17
      iv. 2-Wire and 4-Wire HDULS 18
      v. ADULS-R and ADULS-C 19
   E. Transmission Enhancement Equipment 21
4. Service Specifications 22
   A. General 22
   B. IBRULS 22
   C. DS1ULS 23
   D. DDSULS 25
   E. HDULS 26
   F. ADULS-R 27
   G. ADULS-C 28
5. OTC Equipment and CO Cabling Requirements 29
   A. OTC Equipment Requirements 29
   B. OTC Equipment CO Cabling Requirements 30
   C. OTC DSX-1 Cabling Requirements 30
6. References 31
   A. Definitions 31
   B. Acronyms 35
7. Bibliography 36


**Figures** **Page**

Figure 2-1: Typical 2-Wire IBRULS configuration 4
Figure 2-2: Power Spectral Density Mask for IBRULS 4
Figure 2-3: Typical 4-Wire DS1ULS configuration 5
Figure 2-4: Typical 4-Wire DDSULS configuration 6
Figure 2-5: Typical 2-Wire HDULS configuration 7
Figure 2-6: Typical 4-Wire HDULS configuration 8
Figure 2-7: Power Spectral Density Mask for HDULS 9
Figure 2-8: Typical 2-Wire ADULS configuration 10
Figure 2-9: Upstream Power Spectral Density Mask for ADULS 10
Figure 2-10: Downstream Power Spectral Density Mask for ADULS-R 11
Figure 2-11: Downstream Power Spectral Density Mask for ADULS-C 11
Figure 3-1: IBRULS, 2-Wire HDULS, or ADULS Service Elements 13
Figure 3-2: DDSULS and 4-Wires HDULS Service Elements 13
Figure 3-3: DS1ULS Service Elements 14
Figure 4-1: IBRULS NC Codes 22
Figure 4-2: IBRULS NCI Code Combinations 22
Figure 4-3: IBRULS Acceptance Limits (AL) and Immediate Action Limits (IAL) 23
Figure 4-4: DS1ULS NC Codes 23
Figure 4-5: DS1ULS NCI Code Combinations 24
Figure 4-6: DS1ULS Performance Objectives 24
Figure 4-7: DS1ULS Test Limits 24
Figure 4-8: Pattern Sensitivity Test Criteria 25
Figure 4-9: DDSULS NC Codes 25
Figure 4-10: DSDULS NCI Code Combinations 26
Figure 4-11: DSDULS Acceptance Limits (AL) and Immediate Action Limits (IAL) 26
Figure 4-12: HDULS NC Codes 26
Figure 4-13: HDULS NCI Code Combinations 26
Figure 4-14: HDULS Acceptance Limits (AL) and Immediate Action Limits (IAL) 27
Figure 4-15: ADULS-R NC Codes 27
Figure 4-16: ADULS-R NCI Code Combinations 27
Figure 4-17: ADULS-R Acceptance Limits (AL) and Immediate Action Limits (IAL) 27
Figure 4-18: ADULS-C NC Codes 28
Figure 4-19: ADULS-C NCI Code Combinations 28
Figure 4-20: ADULS-C Acceptance Limits (AL) and Immediate Action Limits (IAL) 28

## 1. General

**1.01** This technical reference provides the technical specifications associated with the Digital Unbundled Loop Services offered by Bell Atlantic (BA) in the co-carrier section of some local exchange tariffs or via contract. All of the services described in this document may not be available in every jurisdiction.

**1.02** This technical reference has been reissued to provide:

- A Power Spectral Density (PSD) mask for the ISDN Basic Rate unbundled loop service;
- The specifications associated with Digital Data Service (DDS), High Bit Rate Digital Subscriber Line (HDSL), and Asymmetrical Digital Subscriber Line (ADSL) unbundled loop services; and,
- DS1 pattern sensitivity test criteria that conforms with American National Standards.

**1.03** Digital unbundled loop services enable Other Telephone Companies (OTC) that are collocated in a BA Central Office to connect to BA subscriber loops that are designed to support digital services including Integrated Services Digital Network (ISDN) services.

**1.04** The following digital unbundled loop services are defined: ISDN Basic Rate, DS1, DDS, HDSL, and ADSL.

**1.05** The technical specifications in this document assume that the OTC is collocated in the same CO as the digital unbundled loop service. In the future, BA may offer transport services for digital unbundled loop services. In that case, the technical specifications associated with the transport service should be consulted.

## 2. Service Description

### A. General

**2.01** The description, terms and conditions, rates, regulations, and Universal Service Order Codes (USOCs) for digital unbundled loop services are contained in applicable tariffs or contracts.

**2.02** Digital unbundled loop services are provided subject to availability on a first-come first-served basis. Special construction charges apply when appropriate facilities are not available.

**2.03** Digital unbundled loop services provide the OTC with a transmission channel suitable for the transport of certain digital services. The channel is between the Central Office Distributing Frame (CODF) or DSX-1 termination of OTC equipment in a BA Central Office (CO) and the Rate Demarcation Point (RDP) at an End User (EU) customer location.

### B. ISDN Basic Rate Unbundled Loop Service (IBRULS)

**2.04** IBRULS provides the OTC with an effective 2-wire channel that is suitable for the transport of 160 kbps digital signals in both directions simultaneously using the 2B1Q line code described in ANSI T1.601-1992 [1}.

**2.05** The interface at the OTC CODF termination is 2-wire and the interface at the EU-RDP is 2-wire. If a single circuit NID is provided at the EU-RDP, an RJ11C or an RJ49C connector will be used. At each interface one conductor is called tip and the other conductor is called ring.

**2.06** The transmission channel between the IBRULS 2-wire interfaces is effective 2-wire. An effective 2-wire channel may be entirely 2-wire or it may contain a 4-wire facility portion (such as a Digital Loop Carrier) with a 2-wire metallic extension to the EU-RDP. A typical IBRULS configuration is shown in Figure 2-1.

**2.07** IBRULS supports full duplex 160 kbps digital transmission. The 160 kbps ISDN Basic Rate supports a 16 kbps overhead channel for performance monitoring, framing, synchronization, and maintenance. In addition, the line rate supports 144 kbps of payload data which is divided into three channels, two 64 kbps "B" (Bearer) channels and one 16 kbps "D" (Data) channel.

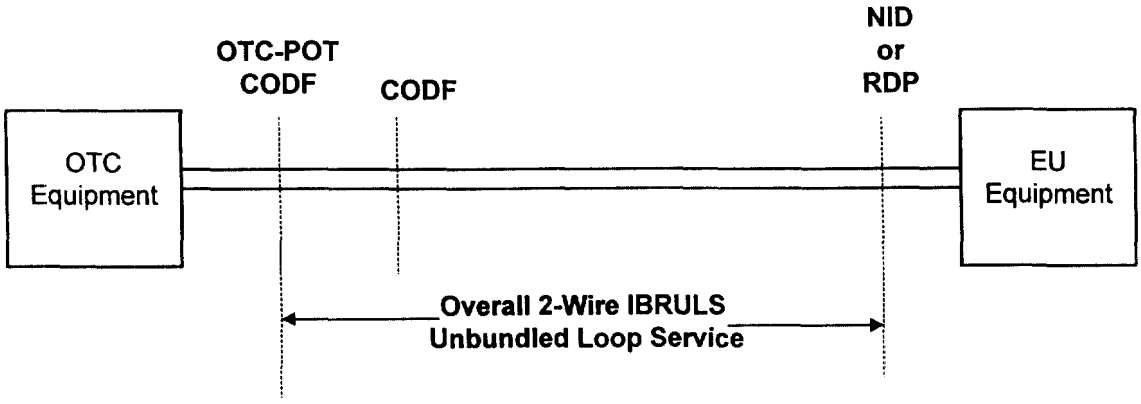


**Figure 2-1. Typical 2-Wire IBRULS Configuration**

**2.08** IBRULS may be provided using a variety of loop transmission technologies, including but not limited to, metallic cable, metallic cable based digital loop carrier, and fiber optic digital loop carrier systems.

**2.09** IBRULS supports the ISDN Basic Rate Two-Binary One-Quaternary (2B1Q) line code described in ANSI T1.601. Vendor-specific, non-standard line codes are not supported and the BA spectrum management guidelines do not permit their deployment.

**2.10** OTC or CPE equipment connected to an IBRULS shall meet the Power Spectral Density mask in Figure 2-2 below. To verify compliance with this requirement, measurements shall use a noise power bandwidth of 1 kHz.

**2.11** CPE that is connected to an IBRULS shall also meet the applicable signal power limits in Part 68 of the FCC Rules [3].

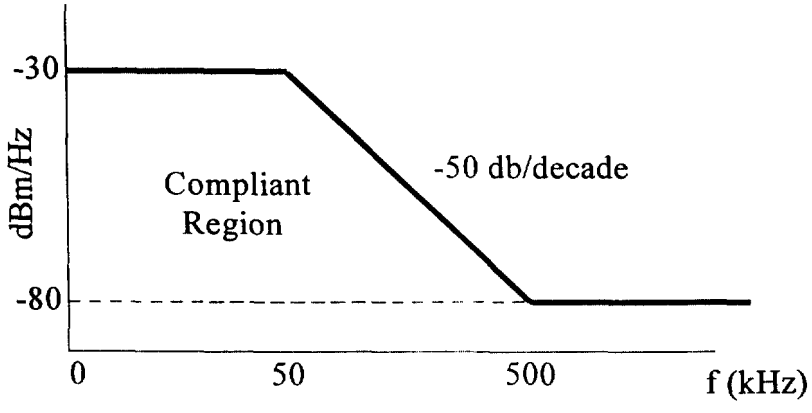


**Figure 2-2. Power Spectral Density Mask for ISDN Basic Rate Technology**

**2.12** IBRULS may not be spectrally compatible in the same cable or binder group with 15 kHz Program Audio services, Type I or Type II Public Switched Digital Service (PSDS), Data-Voice Multiplexers (DVM) associated with CO-LAN services, or Analog Carrier. Additional information about spectrum compatibility may be found in Section 3D(i).

**2.13** IBRULS utilizes subscriber loop facilities that were originally designed for Plain Ordinary (analog) Telephone Service (POTS). For this reason, some loops, such as loaded metallic facilities or analog carrier systems, may not be suitable for IBRULS.

**2.14** Bell Atlantic will work with the OTC to resolve facility problems should the IBRULS loop facility require enhancement equipment to support BRI service.

### C. DS1 (1.544 Mbps) Unbundled Loop Service (DS1ULS)

**2.15** DS1ULS provides the OTC with a 4-wire transmission channel that is suitable for the transport of 1.544 Mbps (DS1) digital signals in both directions simultaneously.

**2.16** The interface at the OTC DSX-1 termination in the BA CO is 4-wire and the interface at the EU-RDP is 4-wire. If a single circuit NID is provided at the EU-RDP, an RJ48C or an RJ48X connector will be used. The conductors of the OTC or EU transmit pair are called tip and ring and the conductors of the OTC or EU receive pair are called tip 1 and ring 1.

**2.17** The transmission channel between the DS1ULS interfaces consists of 4-wire facilities. DS1ULS may be provided using a variety of loop transmission technologies, including but not limited to, metallic cable, metallic cable with a mid-span repeater, metallic cable with High-Bit-Rate Digital Subscriber Line (HDSL) technology, or fiber optic transport systems. A typical DS1ULS configuration is shown in Figure 2-3.

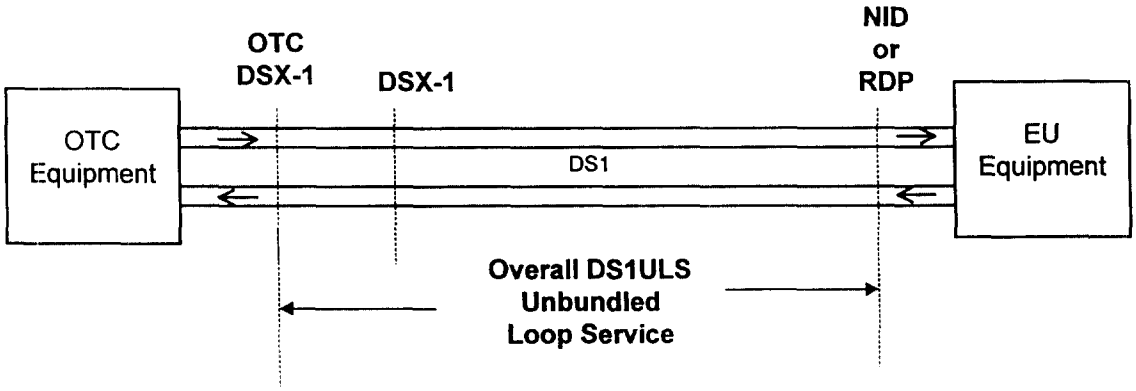


**Figure 2-3. Typical 4-Wire DS1ULS Configuration**

**2.18** DS1ULS enables full duplex 1.544 Mbps digital transmission. The 1.544 Mbps line rate supports an 8 kbps framing format and 1.536 Mbps of payload data. DS1ULS will support either the Superframe (SF) or Extended Superframe (ESF) framing formats as specified in ANSI T1.403-1995 [2].

**2.19** DS1ULS is available with either the AMI or B8ZS line codes as specified in ANSI T1.403-1995 [2].

**2.20** The DS1 interface provided by BA does not ordinarily deliver direct-current power to the EU-RDP via the simplex leads of the transmit and receive pairs, however when BA employs metallic facilities and no loopback device is deployed, direct-current power will appear at the EU-RDP on the simplex leads. In such cases, the EU equipment shall provide a direct-current connection between the simplexes of the transmit and receive pairs.

**2.21** Direct-current power shall not be delivered to the EU-POT by EU customer equipment. In addition, EU customer equipment shall not apply voltages to the EU-POT other than those described in ANSI T1.403-1995 [2].

**2.22** The OTC will be responsible for providing synchronization timing for the DS1ULS.

**2.23** OTC equipment that is connected to DS1ULS shall meet the applicable signal power limits in ANSI T1.102 [8].

**2.24** CPE that is connected to DS1ULS shall meet the applicable signal power limits in ANSI T1.403 [7] and Part 68 of the FCC Rules [3].

**2.25** DS1ULS is not spectrally compatible in the same binder group with ADSL technologies or in the same cable with Analog Carrier. Additional information about spectrum compatibility may be found in Section 3D(ii).

**2.26** Subscriber loop facilities were originally designed for POTS. For this reason, some loops may not be suitable for DS1ULS.

## D. DDS Unbundled Loop Service (DDSULS)

**2.27** DDSULS provides the OTC with a 4-wire transmission channel that is suitable for the transport of digital data at a synchronous rate of 56 or 64 kbps simultaneously in both directions. An optional secondary channel operating at 8 kbps is available with the 56 Kbps service. In addition, DDSULS may be used to transport 56 kbps Type I Public Switched Digital Service (PSDS).

**2.28** The interface at the OTC CODF termination in the BA CO is 4-wire and the interface at the EU-RDP is 4-wire. If a single circuit NID is provided at the EU-RDP, an RJ48S connector will be used. The conductors of the OTC or EU transmit pair are called tip and ring and the conductors of the OTC or EU receive pair are called tip 1 and ring 1.

**2.29** The transmission channel between the DDSULS interfaces consists of 4-wire facilities. DS1ULS may be provided using a variety of loop transmission technologies, including but not limited to, metallic cable, metallic cable with a mid-span repeater, metallic cable based digital loop carrier, and fiber optic digital loop carrier systems. A typical DDSULS configuration is shown in Figure 2-4.

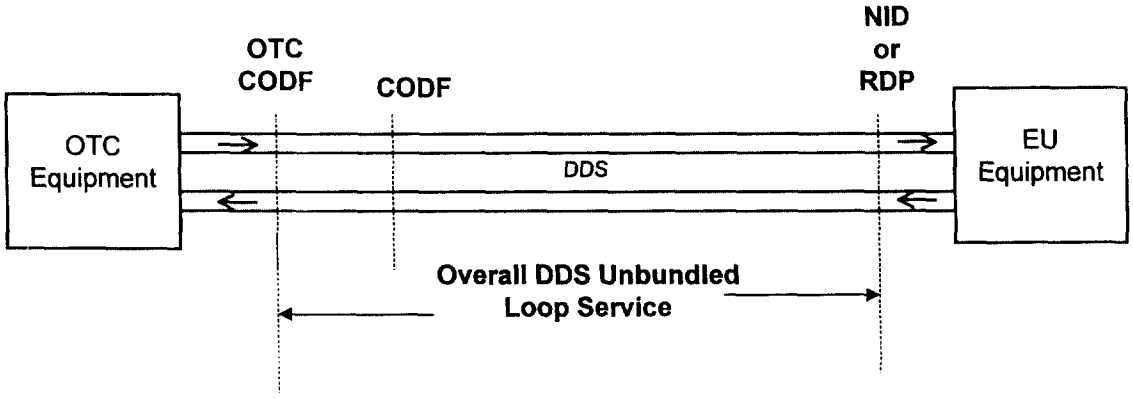


**Figure 2-4. Typical 4-Wire DDSULS Configuration**

**2.30** When metallic cable facilities are used for DDSULS, the OTC is expected to provide byte organization and synchronization timing on the DDS signal to the EU-RDP. The end-user is expected to provide byte organization and synchronization timing on the DDS signal to the OTC.

**2.31** When metallic cable facilities are used for DDSULS, the OTC is expected to provide sealing current on the simplex path to the EU-RDP. The end-user is expected to provide a simplex path termination to the OTC. Sealing current is used to seal splices and control a loopback relay in the CPE. The DDSULS sealing current is limited to 120 mA maximum and -130 Vdc maximum. Only dc voltages that are negative with respect to ground may be used for sealing current.

**2.32** When metallic cable facilities are used to provide DDSULS, the loops shall be non-loaded and shall meet selected DDS design criteria (see 3.27).

**2.33** When metallic cable facilities are used to provide DDSULS, the interface to the OTC shall consist of balanced modified bipolar return-to-zero (BPRZ) signals at the customer data rate. The bipolar format is modified by the inclusion of bipolar violations for network control.

**2.34** When universal digital loop carrier (UDLC) is used to provide DDSULS, the UDLC will provide an interface at the EU-RDP that meets the network requirements in ANSI T1.410-1992 [3].

**2.35** When UDLC facilities are used to provide DDSULS, interconnection with the OTC will be a DS0 interconnection that meets the DS0-A specifications in ANSI T1.102-1992.

**2.36** Since a DS0 interface requires phase alignment between transmitter and receiver in addition to frequency alignment, the collocated OTC must obtain a 64 kbps Composite Clock (CC) timing signal from the same source as the BA UDLC COT. This source will be the BA Building Integrated Timing Supply (BITS) master clock in the particular BA CO.

**2.37** Direct-current power shall not be delivered to the EU-POT by CPE. In addition, CPE shall not apply voltages to the EU-POT other than those described in ANSI T1.410-1992 [3] and Part 68 of the FCC Rules.

**2.38** Subscriber loop facilities were originally designed for POTS. For this reason, some loops may not be suitable for DDSULS.

### E. High-Bit-Rate Digital Subscriber Line Unbundled Loop Service (HDULS)

**2.39** Two types of HDULS are available: 2-wire or 4-wire. 2-Wire HDULS provides the OTC with an effective 2-wire channel suitable for the transport of 784 kbps digital signals simultaneously in both directions. 4-Wire HDULS provides the OTC with an effective 4-wire channel suitable for the transport of 1.568 Mbps digital signals simultaneously in both directions. 2-Wire and 4-Wire HDULS channels are suitable for the transport of 2B1Q signals as described in Committee T1 Technical Report No. 28 [4].

**2.40** HDULS is currently provided by using suitable non-loaded metallic cable facilities. In the future HDULS may be provided by using other loop transmission technologies, including but not limited to, metallic cable, metallic cable based digital loop carrier, and fiber optic digital loop carrier systems.

#### i. 2-Wire HDULS

**2.41** The 2-wire HDULS channel provides transport for bi-directional full duplex 784 kbps digital signals that support a 768 kbps payload plus framing (8 kbps) and overhead (8 kbps). This is sometimes called single-loop operation.

**2.42** The OTC interface at the CODF termination for the effective 2-wire HDULS channel is 2-wire and the interface at the EU-RDP is also 2-wire. If a single circuit NID is provided at the EU-RDP, an RJ11C connector will be used. The effective 2-wire channel ordinarily consists entirely of 2-wire metallic facilities however in the future if Digital Loop Carrier can be used for HDULS then the channel may contain a 4-wire facility portion. A typical 2-wire HDULS configuration is shown in Figure 2-5.

**2.43** When metallic facilities are used to provide 2-wire HDULS, the loop shall meet selected Carrier Serving Area design criteria (see 3.27).

**ii. 4-Wire HDULS**

**2.44** The 4-wire HDULS channel provides transport for two bi-directional full duplex 784 kbps digital signals each of which supports a 768 kbps payload plus framing (8 kbps) and overhead (8 kbps). This is sometimes called dual duplex or two full pair full duplex operation.

**2.45** The OTC CODF and EU-RDP interfaces for the HDULS channel are 4-wire. If a single circuit NID is provided at the EU-RDP, an RJ48S connector will be used. A typical 4-wire HDULS configuration is shown in Figure 2-6.

**2.46** 4-Wire HDULS supports the 2B1Q line code. Other line codes are not supported and Bell Atlantic spectrum management rules do not permit their use on HDULS services.

**2.47** If and when digital loop carrier (DLC) is used to provide 4-wire HDULS, the DLC will provide two 2-wire interfaces at the OTC-POT and EU-RDP each of which meets the specifications in T1 Technical Report No. 28 [4].

**2.48** When metallic facilities are used to provide 4-wire HDULS, both 2-wire loops shall meet selected Carrier Serving Area design criteria (see 3.27). In addition, each 2-wire loop may have different characteristics. The difference in working length plus bridged tap may be as much as 3.3 kft. The pairs may differ in wire gauge, bridged tap, and exposure to crosstalk. The difference in the transmission characteristics of each pair may change slowly due to temperature differences between each loop.

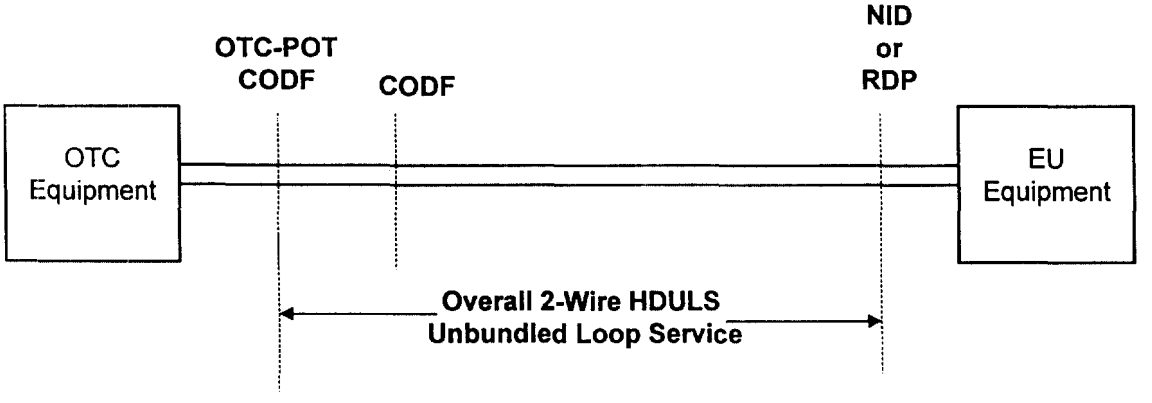


**Figure 2-5. Typical 2-Wire HDULS Configuration**

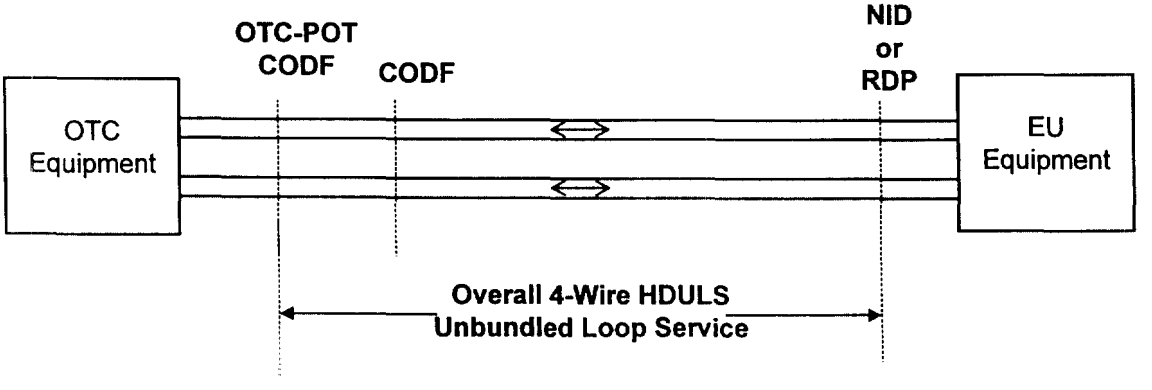


**Figure 2-6: Typical 4-Wire HDULS Configuration**

### iii. HDULS Limitations

**2.49** 2-Wire HDULS is not intended to support single-pair 1.544 Mbps full duplex HDSL systems that use a single pair and an echo canceled hybrid method to carry a 1.544 Mbps payload plus overhead in both directions simultaneously. Bell Atlantic spectrum management rules do not permit the use of such systems with HDULS services.

**2.50** 4-wire HDULS is not intended to support Dual-Simplex (2-pair simplex) HDSL systems that use two pairs each carrying a unidirectional signal at a nominal 1.544 Mbps rate plus overhead and Bell Atlantic spectrum management rules do not permit the use of such systems with HDULS services..

**2.51** HDULS may not be spectrally compatible in the same cable or binder group with 15 kHz Program Audio services, Type I or Type II Public Switched Digital Service (PSDS), Data-Voice Multiplexers (DVM) associated with CO-LAN services, or Analog Carrier. Additional information about spectral compatibility may be found in Section 3D(iv).

**2.52** OTC or CPE equipment connected to an HDULS shall meet the applicable signal power limits in T1 Technical Report No. 28 [10], Part 68 of the FCC Rules [3], and the Power Spectral Density mask in Figure 2-7 below.

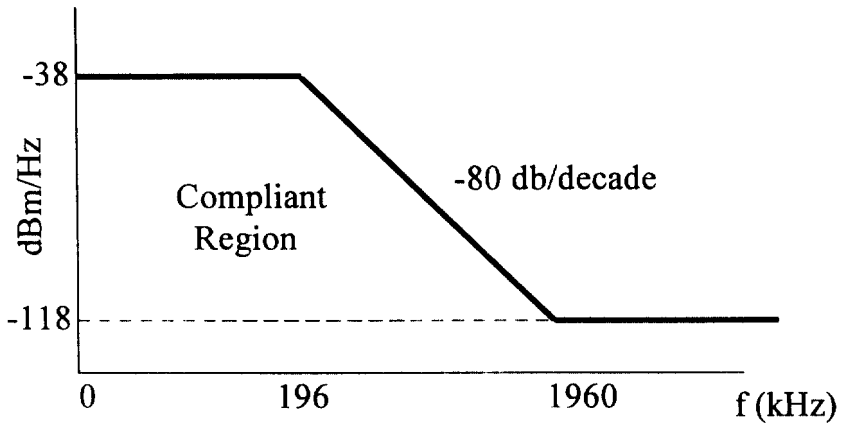


**Figure 2-7. Power Spectral Density Mask for HDSL Technology**

**2.53** Loop power or sealing current applied to an HDULS is limited to the Class A3 voltage limits in Bellcore GR-1089-CORE [14}. Only dc voltages that are negative with respect to ground may be used for sealing current.

**2.54** HDULS utilizes subscriber loop facilities that were originally designed for POTS. For this reason, some loops, such as loaded metallic facilities, are not suitable for HDULS.

## F. Asymmetrical Digital Subscriber Line (ADSL) Unbundled Loop Service

**2.55** ADSL Unbundled Loop Service (ADULS) provides the OTC with an effective 2-wire channel that is suitable for the transport of POTS as well as digital signals. Two types of ADULS are available: ADULS-R (Revised Resistance Design) and ADULS-C (Carrier Serving Area design). The ADULS channels are suitable for the transport of ADSL signals that meet the specifications of ANSI T1.413-1995 [5] or T1E1/97-104R2 [6].

**2.56** The ADULS interface at the CODF termination is 2-wire and the interface at the RDP is 2-wire. If a single circuit NID is provided at the EU-RDP, an RJ11C connector will be used. One conductor of the pair is called tip and the other conductor is called ring.

**2.57** ADULS is currently provided by using 2-wire non-loaded metallic cable facilities that meet selected Revised Resistance Design (RRD) or Carrier Serving Area (CSA) design criteria, if available. A typical ADULS configuration is shown in Figure 2-8.

### i. ADULS-R

**2.58** In addition to analog POTS signals, an ADULS-R unbundled loop service is suitable for the transport of Discrete Mulit-Tone (DMT) or Carrierless AM/PM (CAP) signals at rates up to 1.5 Mbps downstream (toward the EU-POT) and up to 176 kbps upstream (from the EU-POT).

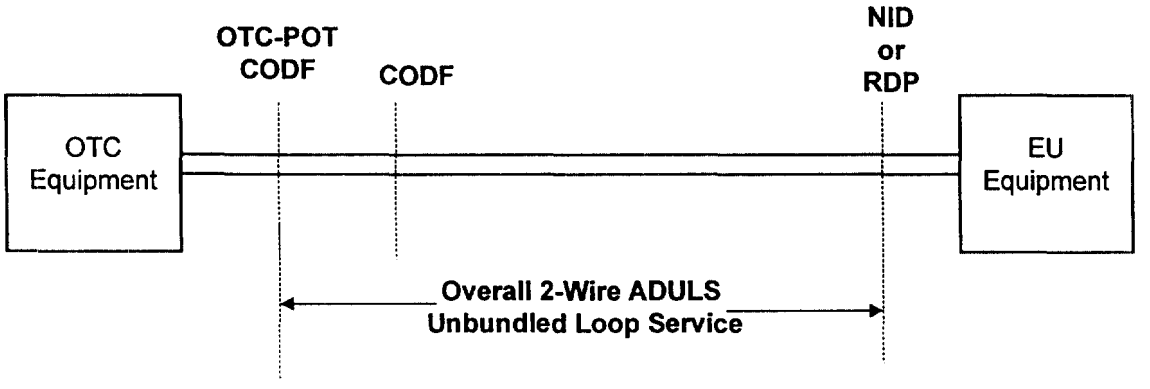


**Figure 2-8. Typical 2-Wire ADULS Configuration**

**2.59** CPE equipment connected to an ADULS-R service shall meet the applicable signal power limits in Part 68 of the FCC Rules [3] and the Power Spectral Density mask in Figure 2-9.

**2.60** OTC equipment connected to an ADULS-R service shall meet the Downstream Power Spectral Density mask in Figure 2-10.

**2.61** The metallic facilities used to provide ADULS-R shall meet selected RRD design criteria (see 3.30).

**2.62** ADULS-R supports loop-start signaling that meets the specifications of ANSI T1.401-1995 [6].

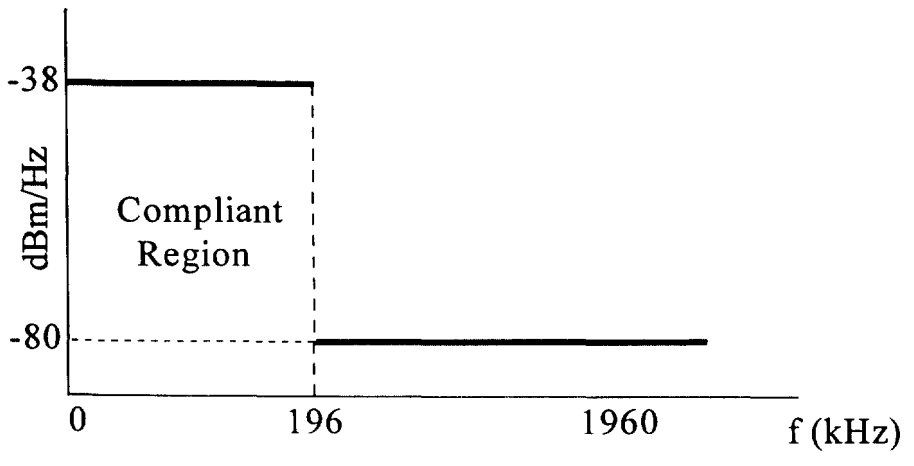


**Figure 2-9. Upstream Power Spectral Density Mask for ADSL Technology**

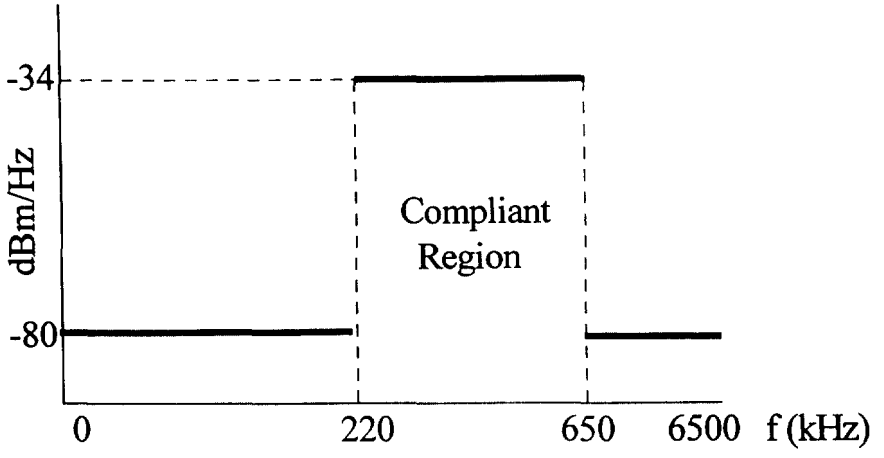


**Figure 2-10. Downstream Power Spectral Density Mask for ADULS-R**

**ii. ADULS-C**

**2.63** In addition to analog POTS signals, an ADULS-C service is suitable for the transport of Discrete Mulit-Tone (DMT) or Carrierless AM/PM (CAP) signals at rates up to 6 Mbps downstream (toward the EU-POT) and up to 640 kbps upstream (from the EU-POT).

**2.64** ADULS-C supports loop-start signaling that meets the specifications of ANSI T1.401-1995 [6].

**2.65** CPE equipment connected to an ADULS-C service shall meet the applicable signal power limits in Part 68 of the FCC Rules [3] and the Power Spectral Density mask in Figure 2-9.

**2.66** OTC equipment connected to an ADULS-C service shall meet the Downstream Power Spectral Density mask in Figure 2-11.

**2.67** The metallic facilities used to provide ADULS-C shall meet selected CSA design criteria (see 3.31).

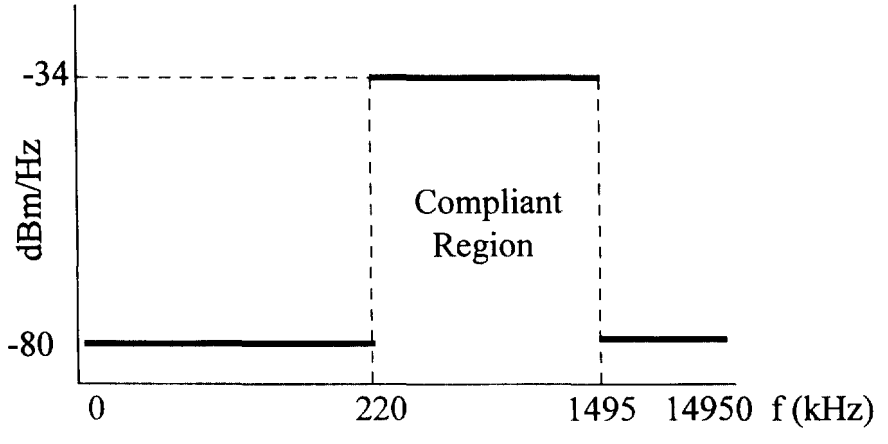


**Figure 2-11. Downstream Power Spectral Density Mask for ADULS-C**

### iii. ADULS Limitations

**2.68** ADULS services may not be spectrally compatible in the same cable or binder group with the Data-Voice Multiplexer (DVM) technology associated with CO-LAN services, Analog Carrier systems, T1 technology (including DS1ULS), or some types of ADSL technology. Additional information about spectral compatibility may be found in Section 3D(v).

**2.69** ADULS utilizes subscriber loop facilities that were originally designed for POTS. For this reason, some loops, such as loaded metallic facilities, are not suitable for ADULS.

## 3. Element Specifications

### A. General

**3.01** Two elements are always used with IBRULS, DDSULS, HDULS, and ADULS services. They are: CODF wire and tie cable(s), and subscriber loop facilities. Figure 3-1 illustrates the service elements and identifies the sections of this document that contain the requirements for each of the elements associated with IBRULS, 2-wire HDULS, and ADULS services. Figure 3-2 illustrates the service elements associated with the DDSULS and 4-wire HDULS services.

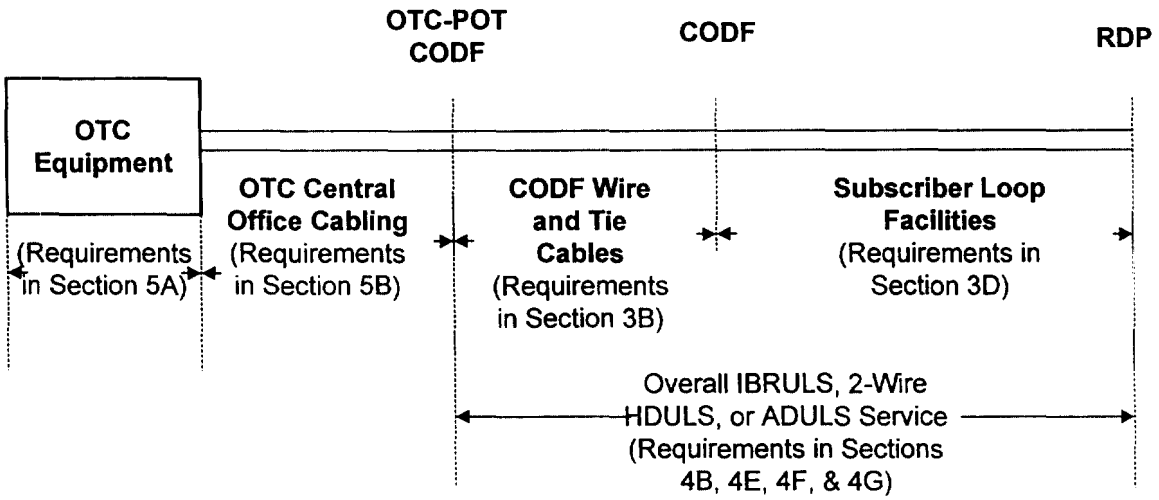


**Figure 3-1. IBRULS, 2-Wire HDULS, or ADULS Service Elements**

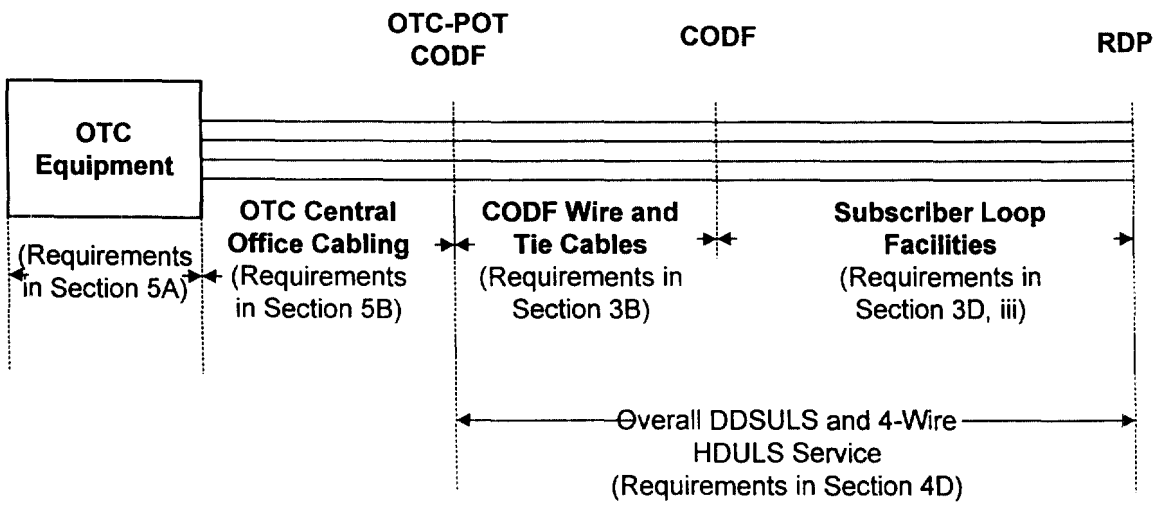


**Figure 3-2. DDSULS and 4-Wire HDULS Service Elements**

**3.02** A third element, electronic transmission enhancement equipment, is sometimes used with IBRULS and DDSULS services. The requirements for IBRULS and DDSULS transmission enhancement equipment are found in section 3E.

**3.03** Two elements are always used with DS1ULS services. They are: DSX-1 cross-connect wiring and tie cable(s), and subscriber loop facilities. Figure 3-2 illustrates the DS1ULS service elements and identifies the sections of this document that contain the specifications for each of the elements.

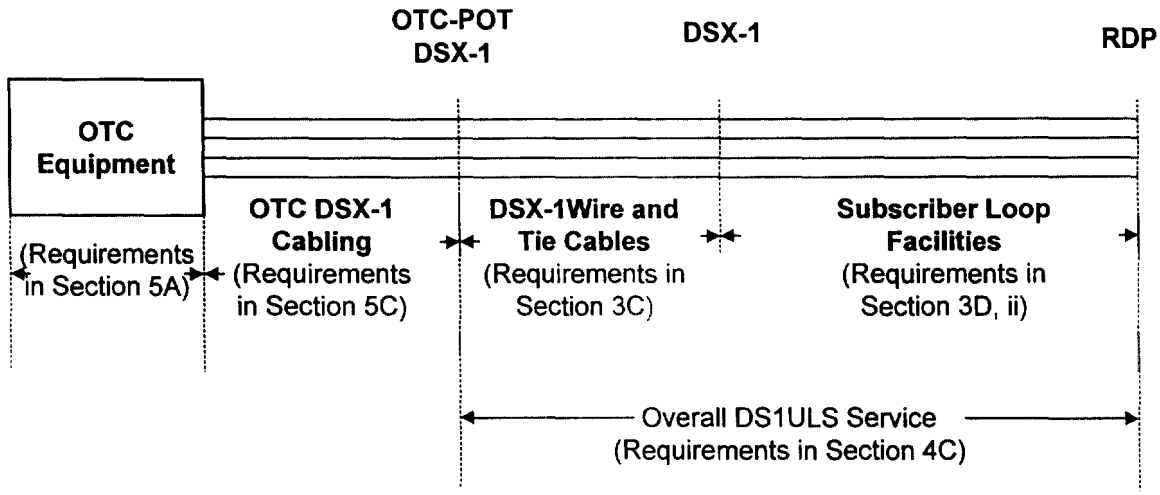


**Figure 3-3. DS1ULS Service Elements**

## B. CODF Wiring and Tie Cable(s)

**3.04** CODF cross-connect wiring and tie cable(s) are used to link the CODF termination of collocated OTC equipment to the CODF termination of metallic subscriber loops, DLC COTs, and electronic transmission enhancement equipment.

**3.05** The total combined length of all CODF cross-connect wiring and all CODF-to-CODF tie cables between the CODF termination of the OTC equipment and the CODF termination of any subscriber loop in the same CO should be less than 1500 feet. No bridged tap is permitted in the CO.

**3.06** The direct-current resistance between the CODF termination of the OTC equipment and the CODF termination of any subscriber loop in the same CO should be less than 80 ohms. This is equal to 1500 or less feet of 24 gauge cable.

**3.07** The 1 kHz loss measured on the CODF wiring and tie cables when measured between 900 ohm impedances should be .85 dB or less.

**3.08** The C-message noise measured on the wiring and tie cables between the CODF termination of the OTC equipment and the CODF termination of a subscriber loop in the same CO shall be 20 dBrnC or less.

## C. DSX-1 Wiring and Repeatered Tie Cable(s)

**3.09** DSX-1 cross-connect wiring and tie cable(s) are used to link the DSX-1 termination of OTC equipment to the DSX-1 termination of the BA DS1 subscriber loop. In some cases, an electronic digital cross-connect system may be substituted for the DSX-1.

**3.10** The total length of all DSX-1 cross-connect wiring should be less than 85 feet of 22 gauge cable.

**3.11** When repeatered tie cables are used to link OTC DSX-1 terminations to BA DSX-1 terminations, the cabling between the repeaters and the DSX-1 panels shall be built-out in each direction of transmission such that the overall cabling and build-out is the equivalent of 655 feet of 22 gauge ABAM cable.

## D. Subscriber Loop Facilities

**3.12** Subscriber loop facilities consist of feeder and distribution plant between the CODF or DSX-1 and the EU customer's RDP. Feeder plant uses a variety of transmission technologies, including but not limited to, twisted-pair metallic cables, twisted-pair metallic cable based digital loop carrier, and fiber optic based digital loop carrier. Distribution plant usually consists of multipair metallic cables. Additional information about subscriber loops may be found in Bellcore SR-TSV-002275 [7].

**3.13** Subscriber loop facilities have been designed on a global basis primarily to accommodate POTS and guarantee that loop transmission loss at 1 kHz is statistically distributed and that no single loop exceeds the signaling range of the CO.

**3.14** Prior to 1980, loops were designed using one of the following design plans: Resistance Design, Long Route Design, or Unigauge Design. From 1980 to 1986, the Modified Resistance Design, Modified Long Route Design, and Concentrated Range Extension with Gain plans were applied on a going-forward basis (i.e., retroactive redesign was not implemented). In 1986, the Revised Resistance Design (RRD) plan was applied on a going-forward basis.

**3.15** Most metallic loop facilities (98%) were designed using the RD, MRD, or RRD design rules. The RRD design rules currently in use limit the loop resistance to the design range of the CO switch (1300 or 1500 ohms) or 1500 ohms whichever is less. The vast majority of non-loaded loops, designed using these rules, are < 1300 ohms and will support IBRULS without the need for additional transmission enhancement.

### i. IBRULS

**3.16** IBRULS uses a subscriber loop facility between the BA CO and the EU-RDP. The IBRULS loop is either:

(a) a qualified metallic non-loaded facility consisting of cable and wire between the CODF and the RDP wire with no intermediate electronics; or,

(b) a metallic loop facility with intermediate transmission enhancement equipment that consists of a qualified metallic non-loaded facility between the CODF and intermediate transmission enhancement equipment and a qualified metallic non-loaded facility between the intermediate transmission enhancement equipment and the RDP; or,

(c) a universal digital loop carrier (DLC) facility with 2B+1D ISDN Basic Rate transport capability via three DS0 channels. The DLC facility consists of:

- CO cabling between the CODF and a DLC Central Office Terminal (COT) equipped with an ISDN Basic Rate Interface Terminal Equipment (BRITE) channel unit with NT functionality;

- a fiber or metallic facility from the DLC COT to the DLC Remote Terminal (RT) equipped with an ISDN BRITE channel unit with LT functionality; and,

- a qualified metallic non-loaded facility consisting of cable and wire between the DLC RT and the RDP.