ctc technology & energy

engineering & business consulting

The State of the Art and Evolution of Cable Television and Broadband Technology

Prepared for Public Knowledge

November 2014

Columbia Telecommunications Corporation

10613 Concord Street • Kensington, MD 20895 • Tel: 301-933-1488 • Fax: 301-933-3340 • www.ctcnet.us

TABLE OF CONTENTS

1. Executive Summary 1

2. Overview of Cable TV Technology 4

2.1 Hybrid Fiber-Coaxial Architecture 4

2.2 Fiber Optics Form the Backbone of Cable TV Systems 7

3. Cable vs. Other Technologies 9

3.1 Comparison Between Coaxial Cable and Copper Technologies 9

3.2 Comparison Between HFC and Fiber-to-the-Premises 11

3.3 Comparison Between Cable and Wireless Technology 13

3.3.1 Mobile 3G/4G Technology 14

3.3.2 Fixed Wireless Carrier Technology 17

3.3.3 Wi-Fi Technology 19

3.3.4 Wireless Performance Is Physically Limited by Scarce and Costly Electromagnetic Spectrum 20

3.3.5 Both Wireless and HFC Wireline Technologies Can Scale but Wireline Technologies Always Hold a Capacity Advantage 22

4. Cable Operators Are Increasing Capacity Through Incremental Evolution 25

4.1 Potential Upgrades to Cable System Electronics 27

4.1.1 Upgrade from DOCSIS 3.0 to DOCSIS 3.1 27

4.1.2 Ethernet PON over Coax (EPoC) Architecture 30

4.2 Internet Protocol (IP) Migration and Convergence 31

4.2.1 Converged Cable Access Platform (CCAP) 32

4.2.2 Multicasting—IP Transport of Video Channels 35

4.3 Other Evolutions of Cable-Related Infrastructure 37

4.3.1 Migration from MPEG-2 to MPEG-4 and Higher Compression Standards 37

4.3.2 Introduction of Ultra High Definition Television (UHDTV) 38

4.3.3 Evolution of Set-Top Boxes 39

5. Evolution of Applications and Video Content Presentation over Cable 42

5.1 Multi-Screen Video 42

5.2 Over-the-Top (OTT) Programming 43

5.3 Integration of Wireless Communications 44

5.3.1 Mobile Backhaul 45

5.3.2 Partnerships with Wireless Carriers 46

5.3.3 Wireless Services by Cable Provider 46

5.3.3.1 Residential Wireless Services—Wi-Fi and New Technologies 46

5.3.3.2 Roaming Wi-Fi Networks 48

Appendix A: Glossary of Terms 50

TABLE OF FIGURES

Figure 1: HFC Network Architecture 5

Figure 2: DOCSIS 3.0 Network Architecture 6

Figure 3: FTTP-PON Network Architecture 13

Figure 4: Spectrum Allocation 21

Figure 5: Wireless and Wireline Capacity 23

Figure 6: Representation of OFDM Channel 28

Figure 7: Typical Headend 33

Figure 8: Headend with CCAP 34

Figure 9: Unicast IP Network Carries Multiple Copies of Single Video Channel 36

Figure 10: Multicast IP Network Carries Single Copy of Single Video Channel 36

Figure 11: Cable Operator Providing Fiber Backhaul to Cell Sites and Micro/Nanocells 45

1. Executive Summary

Cable broadband technology is currently the primary means of providing broadband services to homes and businesses in most of the United States. Because of its ubiquity and its inherently greater capacity than commercial wireless solutions and copper telephone lines (the medium underlying digital subscriber line, or DSL, service), hybrid fiber-coaxial (HFC) cable networks will be the main pathway for broadband communications for most homes and businesses for the foreseeable future.

Copper cable is also ubiquitous throughout the United States, but its bandwidth limitations (which are directly related to the underlying physical properties of the medium) and the age and condition of the majority of the existing installed copper cable together limit its scalability. This is especially true as average user demand for broadband communications increases to hundreds of Mbps and, eventually, Gbps of capacity.

The most advanced broadband technologies using copper cable in the U.S.—AT&T's U-verse and other comparable very-high-bit-rate digital subscriber line (VDSL) services—can deliver 25 Mbps[1] over a single pair of copper. However, these systems have extensive fiber deep to the node—to within 3,000 feet of the customer[2]—while the average copper line is 10,000 feet for large phone companies and 20,000 feet for small ones.[3] Given those distances, the average available DSL download speeds are 1.5 Mbps to 6.0 Mbps for the large companies and less than 1.5 Mbps for the small ones.[4] DSL technology will not be able to increase capacity far beyond those speeds or consistently provide service across typical copper lines without substantial upgrades, such as fiber-to-the-curb (FTTC) or other costly re-engineering and construction.

---

[1] *AT&T U-verse Offer Details*, http://www.att.com/shop/internet/internet-service.html#fbid=NU8PvQM6mlj (accessed September 2, 2014). If multiple pairs of copper wires are available to the premises, 45 Mbps service is available. Maximum speeds vary based on address and are not consistent within the provider service area.
[2] Richard Bennett, Luke A. Stewart and Robert D. Atkinson, "The Whole Picture: Where America's Broadband Networks Really Stand," February 2013, The Information Technology and Innovation Foundation (ITIF)," http://www2.itif.org/2013-whole-picture-america-broadband-networks.pdf, accessed September 8, 2014.
[3] Bruce L. Egan, "TVA Rural Studies: Improving Rural Telecommunications Infrastructure," Columbia University http://www.rural.org/workshops/rural_telecom/egan/4.htm, p. 1, accessed September 8, 2014.
[4] Ryan McCowan, "Overview of Copper DSL and FTTN Solutions," November 16, 2010, http://www.adtran.com/pub/Library/Channel%20Programs/Reseller%20Partner%20Program/Power&Tel%202010/Power&Tel_2010_Overview_FTTN_and_Copper_DSL_Breakout.pdf, accessed September 8, 2014.

Wireless networks offer tremendous benefits with respect to mobility and convenience, but are limited in speed and cannot provide the consistency that wireline networks provide.[5] Wireless will therefore always serve as complements—not alternatives—to high-bandwidth wired connections like cable. Moreover, wireless networks rely on wired connections between towers and antennas—so those antennas are essentially extensions of the underlying wired technology.

Fiber optics can deliver greater capacity than cable networks, but the high cost of deploying fully fiber networks such as Verizon FiOS and Google Fiber has limited the availability of direct fiber connection to a small percentage of U.S. homes and businesses. Thus, cable networks compete against fiber networks in relatively few markets nationwide.

In addition, cable operators have shown a commitment to maintaining and upgrading their HFC networks. The cable industry is pursuing several strategies to increase the capacity and performance of cable infrastructure, and to optimize it for user applications.[6] Although there are a number of significant limitations inherent in cable systems relative to fully fiber optic networks, the cable industry plans to incrementally upgrade its infrastructure. Cable system capabilities will increase over the next few years, with the deployment of technologies such as data over cable service interface specifications (DOCSIS) 3.1 and Ethernet Passive Optical Network (PON) over Coax (EPoC), as well as modifications in the capacity of the coaxial portions of the cable system.

The cable industry also plans to leverage the fiber that it has built to within a mile of its customers—massively increasing the capability of the fiber and incrementally extending the fiber closer to the premises as needed. In the words of the Senior Vice President of Engineering and Chief Technical Officer of the Society of Cable Television Engineers (SCTE), the operators are "ramming 880 Gbps via DWDM [multi-frequency high-speed fiber services] to the fiber node and then peeling out whatever is needed

---

[5] "…the 'level' of service afforded to wireless data traffic often varies substantially numerous times every second," from Altschul, M.F., Bergmann, S.K., Witanowski, K.L, Before the FCC, *Comments of CTIA, In the Matter of Protecting and Promoting the Open Internet Framework for Broadband Internet Service,* p.31, GN Docket No. 14-28, GN Docket No. 10-127, July 18, 2014, http://www.ctia.org/docs/default-source/fcc-filings/140718-ctia-open-internet-comments.pdf, accessed September 11, 2014.

[6] Cable is not as scalable "out of the box" as communications systems that were designed from the outset to provide Internet-type broadband data services. Issues include coaxial cable's limitations in terms of physical capacity, a physical architecture optimized for broadcast communications, and a significant remaining migration path to full end-to-end Internet Protocol (IP) operations.

from the node—EPON, GPON, RFoG, DOCSIS HFC, EPoC, [various existing and planned high-speed fiber and coaxial services], etc.—to serve the neighborhood." [7]

In layman's terms, the cable operators have firmly established a strategy to invest in the ongoing operation and improvement of their cable systems—upgrading electronics and protocols, then slowly extending fiber closer to the customer as needed.

[7] Daniel Howard, "Engineering-Wise: Boosting the last mile access speed," *CED*, September 11, 2013, http://www.cedmagazine.com/articles/2013/09/engineering-wise-boosting-the-last-mile-access-speed.

2. Overview of Cable TV Technology

2.1 Hybrid Fiber-Coaxial Architecture

Cable technology is commonly called "hybrid fiber-coaxial" or HFC. This is because most cable systems consist of fiber connections from the operator's headend or hub facility (the cable counterpart of the telephone central office) to an optical "node" near the customer premises, and thereafter comprise coaxial cable to the premises.

Cable operators have extended fiber optics progressively closer to their subscribers but have generally stopped at nodes about one mile from the premises. Comcast, for example, typically only constructs fiber optics to the premises of businesses that subscribe to Metro Ethernet and other advanced services (i.e., generally for symmetrical services faster than 50 Mbps).

Advances in HFC networks and technologies and the emergence of fiber-to-the-premises (FTTP) networks are a consequence of the attempts by service providers to deliver high quality, high-bandwidth service offerings to their customers. In many respects, the differences between these networks relate to the geographic scale of their components rather than fundamentally different technologies or approaches to service delivery.

Both HFC and FTTP networks use optical fibers as the primary physical medium to carry communication signals. Additionally, both HFC and FTTP networks leverage some degree of copper or coaxial cabling for connecting devices such as television set-top boxes, computers, routers, and telephones at the customer premises. Both types of networks can carry broadcast analog or digital video signals, provide telephone services with guaranteed availability of network capacity to ensure quality of service (QoS), and deliver Internet and data connections using standards-based Ethernet interfaces to the customers' equipment.

The most significant distinction between these networks is how closely fiber carries the connection to individual subscribers. A conversion to copper wiring occurs within the "last mile" between a provider and a customer for all HFC networks, while FTTP networks make this conversion at the customer premises.

In the case of an HFC network, headend or hub locations house the core transmission equipment and components necessary for the various service offerings. Fiber optic connections extend from these hubs

to multiple nodes, each of which serves a given geographical area (e.g., a neighborhood). These optical nodes are electronic devices located outdoors, attached to aerial utility lines or placed in pedestals. The equipment in the node converts the optical signals carried on fiber into electronic signals carried over coaxial (coax) cables. From this point onward, coax cable carries the video, data, and telephony services to individual customer locations (Figure 1).

Figure 1: HFC Network Architecture

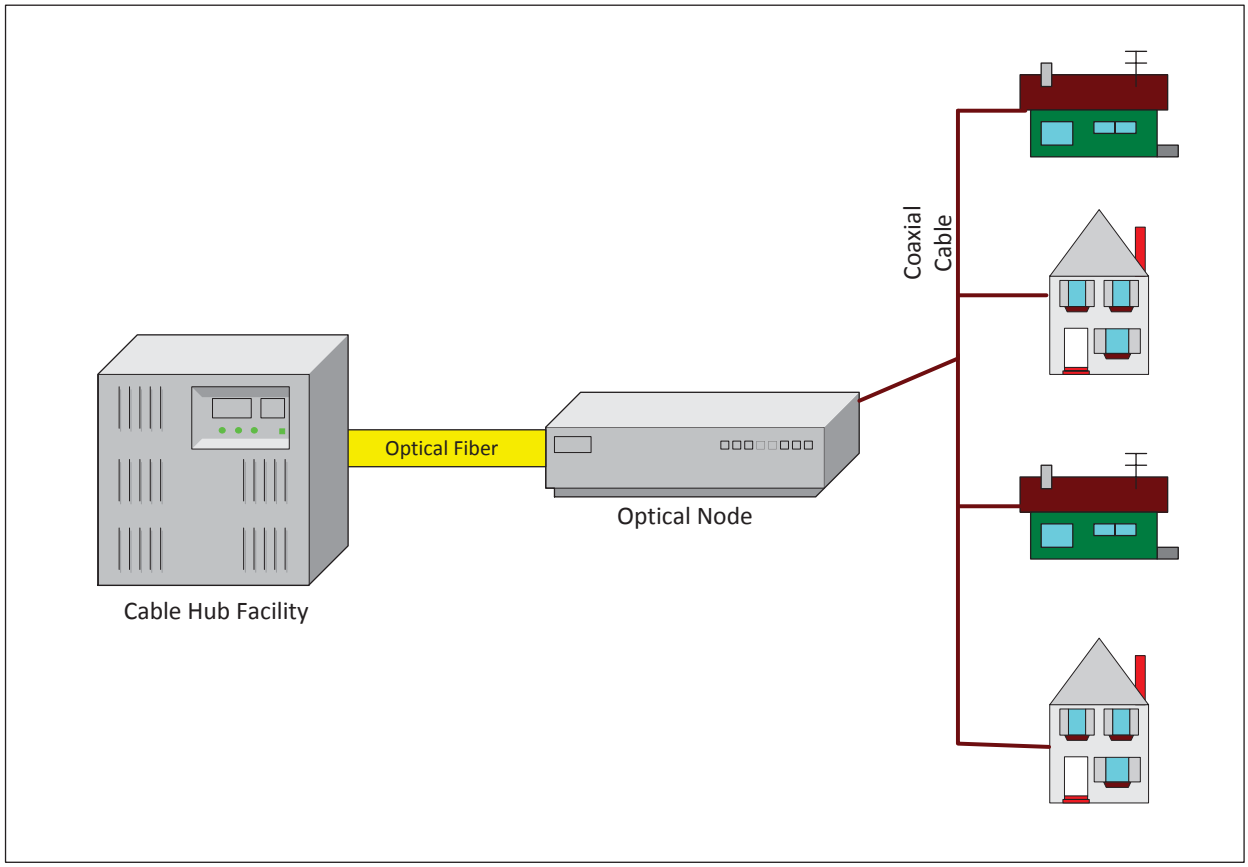

The current leading cable technology for broadband data, known as data over cable service interface specifications version 3.0 (DOCSIS 3.0), makes it possible for cable operators to increase capacity relative to earlier cable technologies by bonding multiple channels together (Figure 2). The DOCSIS 3.0 standard requires that cable modems bond at least four channels, for connection speeds of up to 200 Mbps downstream and 108 Mbps upstream (assuming use of four channels in each direction). A cable operator can carry more capacity by bonding more channels.

It is critical to note that these are peak speeds, and that the capacity is shared by all customers—typically hundreds of homes or businesses—on a particular segment of coaxial cable; this is. Speeds may decrease during bandwidth "rush hours" when more users simultaneously use greater amounts of bandwidth. For example, residential bandwidth use typically goes up considerably during evening hours, when more people use streaming video services and other large data applications.

Figure 2: DOCSIS 3.0 Network Architecture

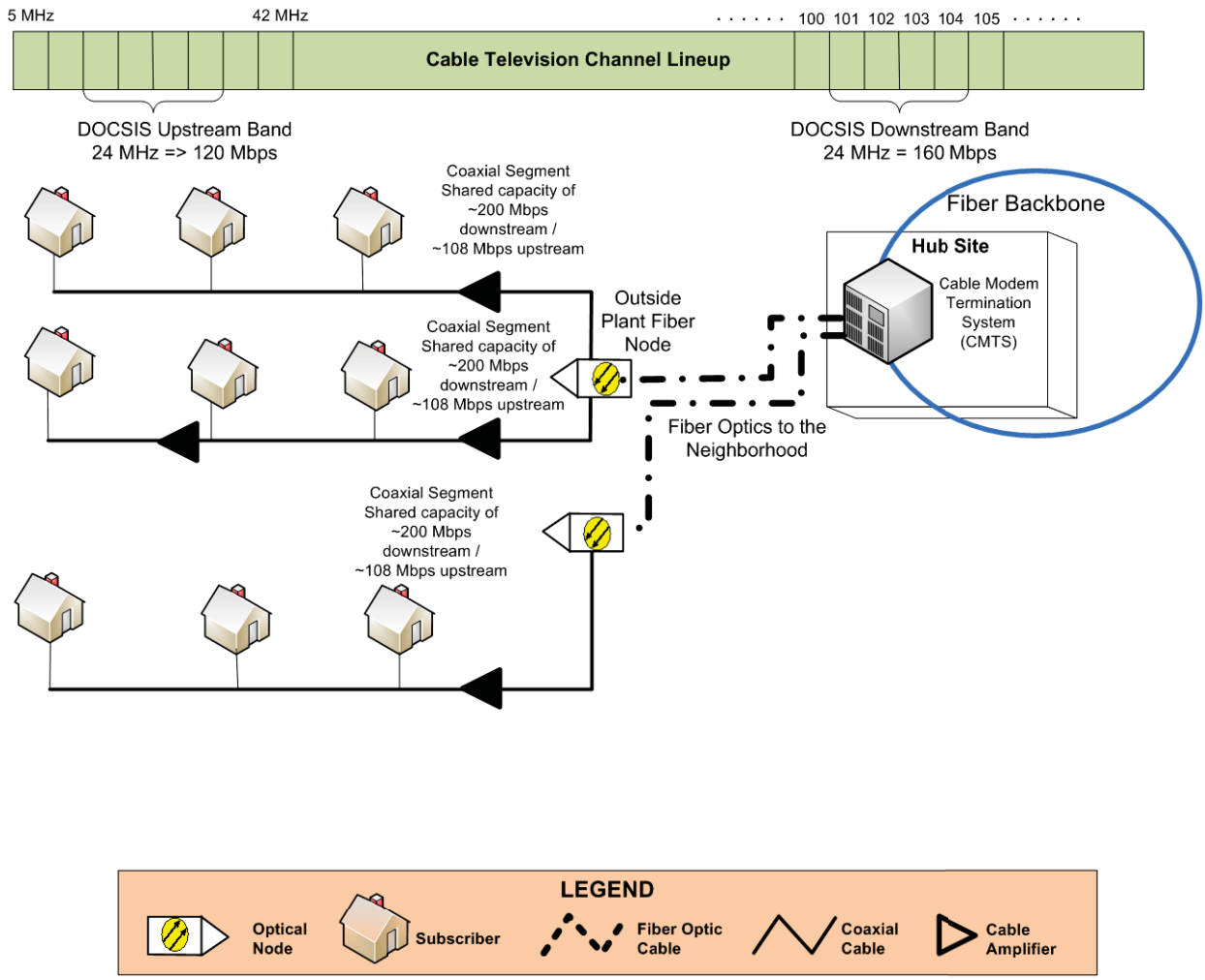

Ultimately, the maximum speed over an HFC network is limited by the physics of the cable plant; the coaxial connection to the customer is generally limited to less than 1 GHz of usable spectrum in total.

2.2 Fiber Optics Form the Backbone of Cable TV Systems

Both coax and twisted-pair copper cables were originally designed to provide video and voice services, and were sufficient in the early years of data communications when usage was low relative to our current expectations. However, as demand for data capacity increased, networks built with these media became insufficient to support high-speed services. On an increasingly large scale, communications carriers and cable operators are deploying fiber to replace large portions of their networks—because for a given expenditure in communications hardware, fiber optics can reliably carry many times more capacity over many times greater distances than any other communications medium.

Fiber is one of the few technologies that can legitimately be referred to as "future-proof," meaning that it will be able to provide customers with better and faster service offerings to accommodate growing demand.

The biggest advantage that fiber holds is bandwidth. A strand of standard single-mode fiber optic cable has a theoretical physical capacity in excess of 10,000 GHz,[8] and capacity can be symmetrically allocated between upstream and downstream data flows using off-the-shelf technology. Fiber optics are not subject to outside signal interference and do not require amplifiers to boost signals in a metropolitan area broadband network.[9]

Within a fiber optic strand, an optical communications signal (essentially a ray of light) behaves according to a principle referred to as "Total Internal Reflection" that guides it through the optical cable. Optical cables do not use electrical conduction and thus do not require a metallic conductor, such as copper, as their propagation medium. Unlike electrical signals over copper cables, optical communications signals also do not experience significantly increased losses as a function of higher-frequency transmission.

Further, technological innovations in the development of fiber optics have enabled the manufacturing of very high quality, low impurity glass; these optics can provide extremely low losses within a wide range of frequencies, or wavelengths, of transmitted optical signals, enabling long-range transmissions.

[8] Conservative estimate derived from the channel widths of the 1285 to 1330 nm and 1525 to 1575 nm bands in G.652 industry-standard single-mode fiber optics.
[9] Maximum distances depend on specific electronics—6 to 25 miles is typical for fiber optic access networks.

Compared to a signal loss on the order of tens of decibels (dB) over hundreds of feet of coaxial cable, a fiber optic cable can carry a signal of equivalent capacity over several miles with only a few tenths of a dB in signal loss.

Moreover, weather and environmental conditions do not cause fiber optic cables to corrode over time in the way that metallic components can, which means that fiber has lower maintenance costs.

One criticism often directed at fiber networks is the cost involved in constructing and deploying the network. However, while optical fiber is often more expensive per foot than many types of copper wire, the costs including construction have become almost comparable over the past decade. Despite the higher material cost of the fiber, new outside plant construction for copper and optical fiber is generally equivalent, because the vast majority of plant construction cost is due to labor.

3. Cable vs. Other Technologies

3.1 Comparison Between Coaxial Cable and Copper Technologies

Despite the rapid evolution in technologies surrounding telecommunications and computing in the past few decades, the underlying physical media supporting electronic communications within the U.S. are still comprised extensively of copper wiring similar to that used at the turn of the twentieth century. Even the most advanced local area networks (LANs) often use "twisted-pair" copper wire of a design resembling a patent awarded to Alexander Graham Bell in 1881. Notwithstanding tremendous leaps in the capabilities of communications technologies leveraging copper wiring, the fundamental physical properties and limitations of this medium are no different today than when the first telephone exchange was opened in 1877 by the Bell Telephone Company.[10]

The history and long life of copper-based communications infrastructure is both a testament to our ability to derive new value from simple concepts through technological innovation, and a warning that copper communications infrastructure has reached a threshold of providing diminishing returns on continued investments.

Due to rising demands for Internet connectivity, cable TV companies and traditional phone companies adapted their infrastructure with new technologies, including cable modems and digital subscriber line (DSL), to begin offering higher-speed data services than simple telephone lines could support.

Bandwidth limits on copper cables are directly related to the underlying physical properties of the medium. Higher data rates require a broader frequency range of operation—wider channels. Twisted-pair wire is limited to a few tens of megahertz in usable bandwidth (at most), with dramatic signal loss increasing with distance at higher frequencies. This physical limitation is why DSL service is only available within a close proximity to the telephone central office.

[10] In-building local area networks (LAN) can carry 100 Mbps and 1000 Mbps (1 Gbps) over copper cables by using two (100 Mbps) or four (1 Gbps) pairs of copper wires (instead of the single pairs used by DSL, U-verse and other services operated by carriers over copper cables in outside plant) and by limiting the maximum distance to 330 feet. LANs also use relatively new cables, while cable outside plant is often the same cabling that was used for telephone service decades ago.

In comparison, coaxial cable has a frequency bandwidth of approximately 1 GHz, approximately 100 times greater than copper cable; therefore its capacity is substantially greater than that of twisted pair. As a result, almost no cable operators are abandoning the HFC architecture—but many telecommunications companies are minimizing their investment in copper lines, and some are abandoning copper lines for wireless services or migrating to FTTP.

The main determinant of DSL speed is the length of the copper line. In systems operated by large telecommunications companies, the average length is 10,000 feet, corresponding to available DSL speeds between 1.5 Mbps and 6 Mbps. In systems operated by small companies in rural areas, the average length is 20,000 feet, corresponding to maximum speeds below 1.5 Mbps.

The fastest copper telephone line technologies in the United States are VDSL and VDSL-2, the technologies underlying AT&T's U-verse and other services. Because these technologies use high frequencies, they are limited to 3,000 feet over typical copper lines and require fiber to the node (FTTN)—much closer than in most HFC systems. Therefore, in order to operate VDSL and VDSL-2, telecommunications companies must invest in large-scale fiber optic construction and install remote cabinets in each neighborhood.

In practice, telephone companies using VDSL-2 over highly upgraded copper lines have been able to provide 25 Mbps over a single copper pair and 45 Mbps over two pairs to the home or business—but it took a significant investment to make it possible for a small percentage of the copper phone lines to temporarily keep pace with cable. Providing even greater speeds will require some combination of even deeper fiber construction, a breakthrough in transmission technology over copper lines, and conditioning and upgrading of the existing copper lines.

The Alcatel-Lucent G.Fast DSL product in development has reached speeds of 500 to 800 Mbps in various environments—but is limited to 330 feet, requiring fiber in front of each home or business.[11] Currently, the only widespread transmission of 100+ Mbps speeds over copper lines is local area network (LAN) technology used within residential and business environments. That technology requires

[11] Mikael Ricknas, "Alcatel-Lucent gives DSL networks a gigabit boost," *PC World*, July 2, 2013, http://www.pcworld.com/article/2043483/alcatellucent-gives-dsl-networks-a-gigabit-boost.html (accessed September 2, 2014).

the use of highly conditioned, new copper (Category 5+ or better), maximum copper distances of 330 feet, and the use of two or four copper pairs for each connection.

3.2 Comparison Between HFC and Fiber-to-the-Premises

As discussed in Section 2.2, HFC and FTTP networks differ in that HFC extends fiber to a node within a mile of the home or business, while FTTP extends fiber all the way to the home or business—typically terminating the fiber at a customer premises device, which then provides service to devices in the home over copper lines, coaxial cable, or wireless connections. As a result, FTTP networks have greater capacity and significant functional benefits over HFC networks. However, HFC can scale in capacity, both through expansion of fiber and upgrading of electronics, and HFC provides a logical evolution path for the hundreds of millions of homes and businesses connected by the technology to gradually reach gigabit speeds.

Because of the properties of fiber optics and the capabilities and scalability of fiber optic electronics, FTTP provides many capabilities that HFC cannot provide. Among current communications technologies, only fiber has the "off-the-shelf" capacity to support gigabit and higher speeds to the majority of users on a network. FTTP is also the only technology with the option of high-speed symmetrical services. At the root of the difference is the superior physical capacity of a fiber optic strand, as compared with coaxial cable. (See Section 2.2 for more details.)

As an example, inexpensive, off-the-shelf equipment used by Google Fiber and other providers can provide symmetrical 1 Gbps service. This is not feasible on an HFC system unless fiber has been extended almost all the way to the subscriber—and even then the service will not be symmetrical. A 1 Gbps cable service will not be a reality until DOCSIS 3.1 is introduced over the next few years, by which time the FTTP state of the art will be 10 Gbps or faster. Therefore, in any 'greenfield' setting, or where a telecommunications operator is not leveraging substantial legacy infrastructure, FTTP is the logical choice for a new wired broadband network.

With the cable lengths and components in a typical cable system, coaxial cable is limited to approximately 1 GHz of physical capacity (spectrum), and operators allocate this capacity with roughly 20 times as much downstream (network to user) as upstream (user to network). An additional limitation arises from the shared nature of cable modem service. Because bandwidth within a neighborhood is

shared rather than dedicated, speeds may be significantly decreased by one's neighbors' simultaneous use of their cable modems.

So far, cable operators have found an effective work-around to address the limitations of coaxial cable—a strategy that can help them scale their services for the coming years while they selectively build fiber where demand is highest. This is to use progressively more advanced technologies and protocols over their coaxial cable and to selectively extend fiber backbones deeper into their networks.

The effect of expanding fiber is twofold:

1) Extending fiber reduces the number of homes and businesses sharing a segment of coaxial cable, thereby incrementally increasing the available capacity per customer.

2) Extending fiber reduces the accumulated effect of the limitations of coaxial cable in the system; with progressively shorter stretches of coaxial cable, the inherent problems with reliability and interference decrease.

For high-value locations (e.g., business parks, "power users," and secure users such as banks, hospitals, and government), the cable operator may extend fiber all the way to the customer, often alongside the existing coaxial cable (thereby reducing the cost of construction relative to totally "new" construction). By pursuing this strategy, HFC systems can come within range of the capacity of FTTP systems without investing in substantial new cable construction.

Similar to HFC networks, central equipment in an FTTP network is housed at a central office (CO) or video headend office (VHO). From the CO, fiber optics extend directly to each customer premises, often with some type of intermediate device located near the customer to split or aggregate connections, depending on the specific technology chosen. For example, an FTTP network using PON technology would employ a passive optical splitter between the CO and the customer locations. The role of the splitter is to simply "split" the signal from the CO into individual customer signals, typically supporting either 32 or 64 customers per fiber strand (Figure 3).

Figure 3: FTTP-PON Network Architecture

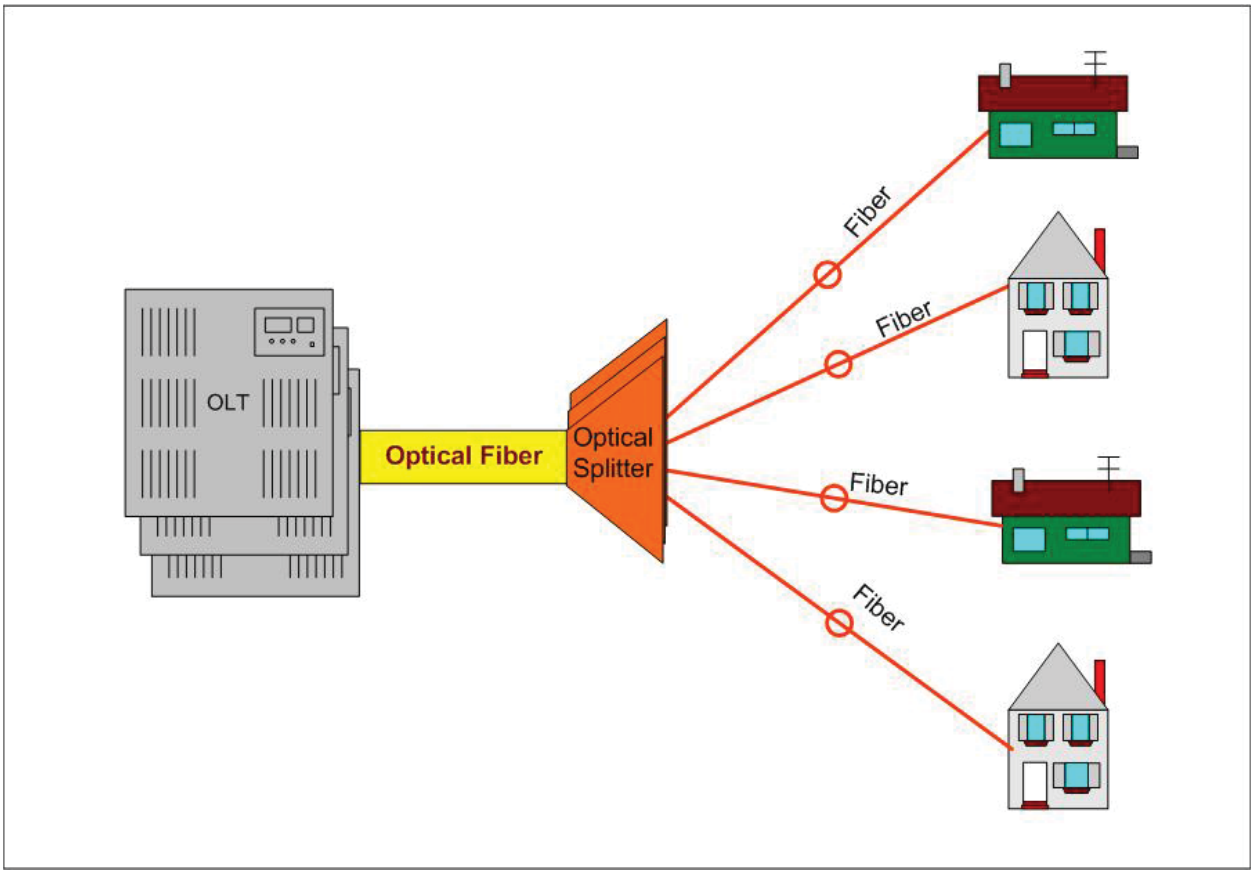

3.3 Comparison Between Cable and Wireless Technology

Mobile and wireless broadband consumption has skyrocketed since the introduction of iPhones, Android devices, and tablets starting in 2007. Consumers now expect robust and ubiquitous wireless connectivity. Increasingly, the connection to individual customers' devices is wireless—either a Wi-Fi connection to a wired HFC, DSL, or fiber network, or a direct connection to a commercial mobile broadband network.

No matter the type of wireless technology, the quality of wireless connections is affected by several factors, such as:

- The over-the-air radio frequencies or spectrum utilized
- The user's proximity to a transmission tower or antenna
- Physical barriers such as buildings, trees, or terrain

- Challenges in providing wireless services indoors, especially inside large buildings, in basements, and in underground garages
- Weather
- The type of wireline or "backhaul" connection at the tower or router (i.e., whether it is connected to a DSL, point-to-point wireless, or fiber optic service—and the speed of that connection)

The variable nature of all of these factors means that wireless performance can be unpredictable. High speeds are possible, but only if environmental and other conditions allow. It is also important to note that wireless networks are largely composed of wireline technology. For example, when a user accesses the Internet on a smartphone, the initial connection is from the device wirelessly to the provider's nearest tower. But all subsequent data transmission from the antenna onward through the network likely occurs via wireline copper or fiber networks. Similarly, in a residence or in a local Wi-Fi deployment by a cable or wireless provider, a Wi-Fi router provides wireless flexibility and allows multiple users to connect to the underlying DSL, cable, or fiber broadband connection.

Wireless technologies provide flexible, convenient, and mobile communication, but have tradeoffs with respect to data capacity and reliability. While the speed of mobile and wireless technologies is constantly improving, under most scenarios these technologies are not capable of supporting applications for telehealth, interactive distance learning, or high-definition "virtual presence" video conferencing, all of which require very large amounts of bandwidth and reliable connections.

3.3.1 Mobile 3G/4G Technology

3G and 4G are terms used to describe a cellular provider's different mobile broadband offerings. However, 3G and 4G stand for "third-" or "fourth- generation" of mobile broadband and do not refer to specific mobile technologies. The term 4G was originally intended to designate wireless services with 1 Gbps capability, but is now mostly a marketing term that encompasses a number of different mobile technologies. In practice, 4G refers to mobile technologies such as Evolved High Speed Packet Access (HSPA+), WiMAX, and Long-Term Evolution Release 8 (LTE).

The greatest advantage of 3G/4G services is mobility. Users' basic feature phones, smartphones, and other mobile devices connect to a series of antennas and base stations that are attached to cell phone towers or, in more urban settings, located on tall buildings. If placed on a mountain top or high tower

with minimal line-of-sight restrictions, the antennas have a transmission distance of more than 40 miles. However, wireless networks are more typically designed with coverage and data capacity, not point-to-point distance, as the main goals. Therefore, the transmission radius for most 3G/4G towers is less than a few miles. The smaller radius is intended to ensure adequate bandwidth for all customers accessing that tower, avoid scenarios in which too many individuals are competing for limited capacity, and provide the capability for users to simultaneously connect to more than one antenna.

As is the case with all wireless technologies, the main limitation on 3G/4G networks is the variability of connection quality and speeds. Typical 3G technologies have maximum download speeds of 1 to 2 Mbps and upload speeds of less than 1 Mbps. Typical 4G technologies have theoretical maximum download speeds from 42 Mbps to 100 Mbps and upload speeds from 11.5 Mbps to 50 Mbps. The speeds users actually experience, however, may be significantly lower due to environmental factors or a large number of devices sharing access at a tower.

Even when a 3G/4G network is designed with a small cell radius to decrease the number of subscribers covered by each cell, the number of user devices simultaneously trying to communicate with the antenna can still cause congestion. Likewise, the technology used to connect the wireless antenna to the rest of the network, whether copper or fiber optic cable, can influence the actual data speeds available to users. Recent testing has shown that typical 4G speeds are usually 4 Mbps to 13 Mbps download and 2 Mbps to 6 Mbps upload.

3G/4G networks are most limited with regard to upload speeds. This limitation is a byproduct of the technology itself. Upload speeds will always be slower than download speeds given that 3G/4G wireless antennas are point-to-multipoint, meaning that a single antenna broadcasts a signal to and receives signals from many devices. This approach makes it simpler for transmission to go downstream to cellular users, from the single point out to the many devices. It is more difficult to manage incoming traffic from multiple devices to the single antenna, as is the case when users send data. In addition, power and battery limitations mean that the signal strength of transmissions from smartphones or other end-user devices is significantly weaker than signals from the tower, further limiting upload speeds unless a user is very close to a tower. Thus, 3G/4G networks will be optimized to deliver significantly faster download speeds than upload speeds.

The asymmetrical service of 3G/4G networks limits the types of applications they can sustain, such as high-definition video conferencing applications or large-scale online file backup services that require

access to higher upload speeds. Furthermore, even where wireless capacity exists for video and other bandwidth-demanding services, wireless service providers typically charge for usage, limiting how much capacity and what applications can be affordably used.

Table 1: Download/Upload Speeds of Wireless Technologies

Applications	**Technology (Download/Upload Service Speeds)**[12]		
	2G/2.5G–EDGE/GPRS, 1xRTT (50 Kbps–300 Kbps / 20 Kbps–100 Kbps)	**3G–EVDO Rev A, HSPA+ (600 Kbps–1.5 Mbps / 500 Kbps–1.2 Mbps)**	**4G – LTE (1.5 Mbps–6 Mbps / 500 Kbps–1.2 Mbps)**
Simple text e-mails without attachments (50 KB)	Bad to Good (2 to 40 seconds)	Good (1 second)	Good (1 second)
Web browsing	Bad to Good	Good	Good
E-mail with large attachments (500 KB)	Bad to OK (14 to 200 seconds)	Good (3 seconds)	Good (1 second)
Play MP3 music files (5 MB)	Bad (134 to 2000 seconds)	OK (27 seconds)	Good (7 seconds)
Play video files (100 MB for a typical 10-min. YouTube video)	Bad (45+ minutes)	OK (9 minutes)	Good (3 minutes)
Maps and GPS for smartphones	Bad	OK	Good
Internet for home	Bad	OK	Good

A 3G/4G service provider can typically enter a new area more quickly than a wired service provider. It can add capacity or coverage by adding base stations and antennas, typically without directly causing a high impact on miles of public rights-of-way. However, there are significant challenges in providing effective wireless service. Design limitations such as power levels, spectrum availability, and required data capacity mean that individual antennas or base stations serve limited areas, often one mile or less. This requires the provider to expend resources and time in placing more base stations.

[12] These data assume a single user. For downloading small files up to 50 KB, it assumes that less than 5 seconds is good, 5-10 seconds is OK, and more than 10 seconds is bad. For downloading large files up to 500 KB, it assumes that less than 5 seconds is good, 5-15 seconds is OK, and more than 25 seconds is bad. For playing music, it assumes that less than 30 seconds is good, 30-60 seconds is OK, and more than 100 seconds is bad. For playing videos, it assumes that less than 5 minutes is good, 5-15 minutes is OK, and more than 15 minutes is bad.

In order for the network to be effective, each base station requires power, backup power (such as generators and batteries), a tall structure for mounting the antennas, coordination with other wireless providers for interference, aesthetic compatibility with the surroundings, connections to the Internet and core network, and security. The provider must address the concerns of the community and the zoning authorities, and must typically pay significant rental fees. Every time the provider desires to improve coverage quality or add capacity, it must face these challenges in placing new facilities.

In addition, to serve customers who are indoors, providers must increase the density of their base stations or add facilities such as microcells or picocells inside buildings.

The challenge of deploying and managing a wireless network may be greater if an unlicensed technology such as Wi-Fi (Section 3.3.2) is used. While the provider does not need to obtain a Federal Communications Commission (FCC) license, it must operate lower-power equipment in accordance with FCC requirements. This requires the use of significantly greater densities of antennas, typically one for each street block. In addition to the challenge of placing and powering the devices, the service provider must accept and cope with all existing and potential future interference from other users of the unlicensed frequency band. It must have a technique to ensure that sufficient data bandwidth is available at the many antenna points and to address the unique capacity and interference problems at each antenna site.

Finally, when a provider needs to migrate to a more advanced technology platform, it may need to re-engineer and redesign its entire system. Antennas, receivers, and transmitters may become obsolete, and spacing between base stations may need to be changed. Power and backbone connectivity may need to be upgraded. A thorough wireless upgrade, as may be required a few times per decade, may require the provider to replace a significant percentage of its capital investment.

3.3.2 Fixed Wireless Carrier Technology

Wireless carriers such as AT&T, Verizon, Sprint, and T-Mobile offer fixed 3G/4G-based wireless Internet services for residential and small business customers across the nation. These services involve the purchase[13] or rental of customer premises equipment (CPE) that connects to the carrier's 3G/4G

[13] The average CPE purchase cost among the national carriers is $175.

network. The CPE then acts as a Wi-Fi hotspot or Ethernet switch for customer devices to connect to the Internet, similar to a cable or DSL modem.

The CPE typically utilizes the same LTE or 3G mobile network as cellphones, but is optimized to provide better reception through the use of enhanced antenna techniques such as multiple input, multiple output (MIMO) and higher gains—which can translate to higher speeds during actual use. The CPE can either be a professionally installed, fixed unit or a portable unit that can be moved to different locations by the customer.

The carriers offer fixed wireless service with maximum download speeds between 5 Mbps and 12 Mbps and maximum upload speeds between 2 Mbps and 5 Mbps. However, customers must adhere to strict limits on their data usage or face high charges for overages.

The CPE may also provide voice services through standard voice jacks. At this stage, the voice service is carried by the wireless carrier on its 2G frequencies, using the same technology as the standard cellular voice service. Like the cellular voice services, this is expected to migrate to an IP service over the LTE network.

Because of their relatively high cost and low capacity, compared to cable, these services are best suited for scenarios in which other connectivity options are unavailable—in rural or remote areas, for example. Fixed carrier wireless is also relatively more desirable if a user frequently moves between fixed locations, such as for work, in college environments, or at a vacation home that is only used for part of the year.

The various fixed wireless service offerings[14] are not cost-effective compared to cable or fiber-based services that do not assign such low data limits. It is interesting to note that carriers like Verizon and AT&T initially positioned their fixed wireless services as an alternative in areas where they did not provide wired services. However, due to the inherent limitations in the availability of wireless spectrum and the design principles of wireless carriers—which cater to mobile users who have less intensive data

[14] The national carriers offer fixed wireless data plans ranging from $20 per month for 500 MB of data to $120 per month for 30 GB of data. There are also equipment charges (with or without a contract) and activation fees. Overage charges are additional and range from $10 to $50 per GB.

needs—it is unlikely that the value proposition offered by fixed wireless services will lead it to replace wired services in the near future.

The implementation of new technologies such as LTE-Advanced and beyond, which promise much higher speeds (up to 1 Gbps), has the potential to increase individual user speeds in excess of 100 Mbps. However, although this exceeds what is available from DSL services, it is still significantly less than what is projected in the same period for fiber and cable technologies.

3.3.3 Wi-Fi Technology

Wi-Fi is a wireless networking standard known as 802.11 developed by the Institute of Electrical and Electronics Engineers (IEEE). Wi-Fi currently operates in the United States within the 2.4 GHz and 5 GHz frequency bands allocated by the FCC for unlicensed use. This designation means that individual users do not require a license from the FCC; the public can purchase Wi-Fi equipment approved by the FCC and operate it freely. This is different than 3G/4G networks that have equipment designed to operate only on the frequencies where a mobile operator has a license (which the operators typically purchase through an auction carried out by the FCC).

Wi-Fi routers have become commonplace in households, offices, coffee shops, airports, and public spaces. They have also been deployed by Comcast and other wired providers to sell Internet service to individuals in those public spaces.

There are several advantages to operating on unlicensed spectrum. With worldwide access to those frequencies, manufacturers of Wi-Fi equipment can take advantage of significant economies of scale, as equipment does not need to be designed for a single operator or licensee. As a result, Wi-Fi equipment is substantially less expensive than 3G/4G technology.

In addition, Wi-Fi has access to larger and more contiguous frequencies compared to most licensed frequencies, which are broken into smaller and more discrete sections in order to allow multiple operators to obtain exclusive licenses. The shared common pool of frequencies in the 2.4 GHz and 5 GHz bands allows Wi-Fi devices to operate on wider channels to increase capacity and speeds. As a result, Wi-Fi technologies are able to operate at high speeds, often faster than the wireline services provided by cable operators. Most Wi-Fi equipment offers maximum download and upload speeds between 50 and 100 Mbps, and updates to the 802.11ac standard could allow for maximum speeds up to 500 Mbps—comparable to the highest speeds being considered for HFC.

The drawback of operating on unlicensed spectrum is that Wi-Fi devices must coexist with other Wi-Fi devices in the band, as well as with other unrelated consumer devices. For example, in the 2.4 GHz band, Wi-Fi devices share spectrum with garage door openers, TV remote controls, and microwave ovens. These devices create interference in the band that can inhibit the performance of Wi-Fi connections. The density of other Wi-Fi devices in the area can also have an impact. The Wi-Fi standard has a built-in contention protocol to manage this issue; Wi-Fi devices are designed to detect other Wi-Fi devices and not broadcast at the same time. However, too many Wi-Fi radios operating in a small area and all on the same frequencies can cause significant performance degradation.

The FCC also regulates the operation of devices within the unlicensed bands used by Wi-Fi, including limitations on devices' transmission power in order to accommodate more devices and users in the band. Thus, Wi-Fi networks have limited range compared to 3G/4G networks. High-end Wi-Fi routers have a range of around 800 feet, or approximately one to two city blocks. Typical consumer-grade Wi-Fi devices only serve a single residence. These devices are called "omnidirectional" in that they broadcast their signal equally in all directions. (Directional Wi-Fi antennas that broadcast their signal in a focused path toward a single business or home can have a range of two to four miles, depending on environmental conditions.) Further limiting the range is the fact that Wi-Fi utilizes higher-frequency spectrum; those signals cannot penetrate walls and foliage or travel as far as signals operating at lower frequencies.

Wi-Fi was designed as a wireless local area networking solution, and is therefore ideal for supporting and sharing connectivity over a small area such as a home, office, campus, or public park. It is largely a complementary technology to a wireline connection; thus, the speeds provided by Wi-Fi connections are usually a reflection of the speeds of the underlying DSL, cable, or fiber optic connection to the Wi-Fi router. Over small areas and with a small number of users, Wi-Fi networks can support most widely available Internet applications including higher-bandwidth streaming video or video conferencing. However, as one expands the coverage area and adds more users, a Wi-Fi network's ability to support higher-bandwidth uses diminishes and it offers connectivity and speeds similar to 3G/4G service.

3.3.4 Wireless Performance Is Physically Limited by Scarce and Costly Electromagnetic Spectrum

All wireless devices use the electromagnetic spectrum. The spectrum is shared by a wide range of users and devices. Most of the spectrum is assigned to particular uses by the FCC and by international

agreement (Figure 4). Commercial licensed spectrum bands for voice and broadband services include 700 and 800 MHz, and 1.7, 1.9, 2.1, 2.5, and 3.5 GHz. Popular unlicensed bands include 900 MHz, 2.4 GHz, and 5.8 GHz.

Figure 4: Spectrum Allocation

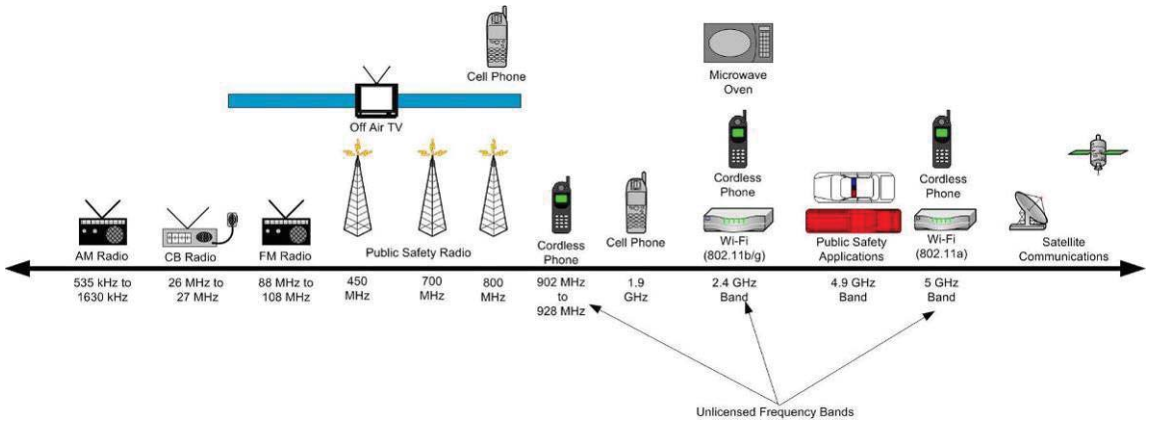

Higher-speed services typically use the higher-frequency spectrum. The higher-frequency spectrum typically has broader channel widths and therefore is capable of providing more capacity. Lower-frequency spectrum typically only has smaller channels available, but has the advantage of penetrating buildings and materials and not requiring as much of a direct line of sight.

Examples of wide channel widths are tens of MHz available in the Advanced Wireless Spectrum and former “Wireless Cable” spectrum. The actual capacity (speed) available will vary according to specific conditions and the technology used, but a reasonable estimate is that the maximum available speed from current technology is within an order of magnitude of the spectral width of a channel. Therefore, tens of MHz of spectrum in a particular large communications channel can theoretically provide the wireless users in a particular area with hundreds of megabits per second of aggregate capacity.

The available speed can be increased by narrowing the wireless beam to smaller areas, and even particular users. Technologies can exploit multiple simultaneous paths between the two endpoints of communications. They can transmit in multiple senses of polarization. They can use sophisticated coding techniques to maximize spectral efficiency.

More spectrum will be opened up to unlicensed “secondary” broadband use through access to unused television channels (also known as TV “white spaces” or TVWS). TVWS technology is in its initial deployments and operates at speeds up to a few Mbps, but can be expected to become cheaper and

faster as it develops and becomes standardized. Also, a new generation of ultrawideband wireless technology uses very large channels at high frequencies, but must operate at low power to not interfere with other users—which limits the technology to short-range or point-to-point use.

Nonetheless, even if the entire electromagnetic spectrum were to somehow simultaneously become available for particular wireless users, *the laws of physics dictate that this theoretical wireless capacity would still be less than the terabits per second (Tbps) currently available in one fiber optic cable with existing off-the-shelf technology*.

The same general comparison holds true for the capacity of an HFC network, which makes 1 GHz available over each node segment (i.e., up to a few hundred homes). Although this capacity is less than over fiber, it is still several times greater than all commercial wireless spectrum combined. In other words, even if a single entity were able to aggregate all available commercial spectrum and focus its antenna beams on a neighborhood with a few hundred homes, it would still have only a fraction of the capacity currently available to the local cable provider. And it would still be subject to all the wireless technical limitations discussed above—including the need for wired capacity (usually fiber optic capacity) to connect the wireless communication system to its core and to other networks.[15]

3.3.5 Both Wireless and HFC Wireline Technologies Can Scale but Wireline Technologies Always Hold a Capacity Advantage

Communications equipment is big business, and researchers and manufacturers are constantly improving both wireless and fiber technologies. As a result, both can be expected to grow in their capability to offer more speed and capacity. However, while it is likely that broadband wireless technology will provide sufficient bidirectional capacity for many additional applications in future years, the capacity of a service over a single pair of fiber optics has consistently been five to 50 times the capacity of comparable carrier-provided wireless links and services over the past 10 years.

For example, off-the-shelf CDMA wireless technologies provides typical speeds of a few Mbps—at a time when typical fiber connectivity supports 10 to 100 Mbps Metro Ethernet technologies. Now, the cutting

[15] Additionally, it would need to depend on a wired service provider, such as a fiber optic company or cable operator, to connect its antenna back to the Internet and backbone network.

edge of carrier wireless solution is LTE networking with peak speeds around 20 Mbps—while cutting-edge fiber service is symmetrical 1 Gbps service.

This gap will likely remain. In coming years, we anticipate the development of advanced wireless technologies, including adaptive antennas,[16] using multiple simultaneous wireless transmission routes, advance spectrum reuse techniques, and point-to-point laser optical technologies. At the same time, HFC cable and fiber optic advances will likely include faster electronics, a wider range of wavelengths, and optical switching.

Figure 5 provides examples of broadband wireless and wireline technologies, including licensed, unlicensed, private, and carrier technologies. Because the actual capacity available to a user will vary according to specific circumstances, the capacity is shown as a range for each technology.

Figure 5: Wireless and Wireline Capacity

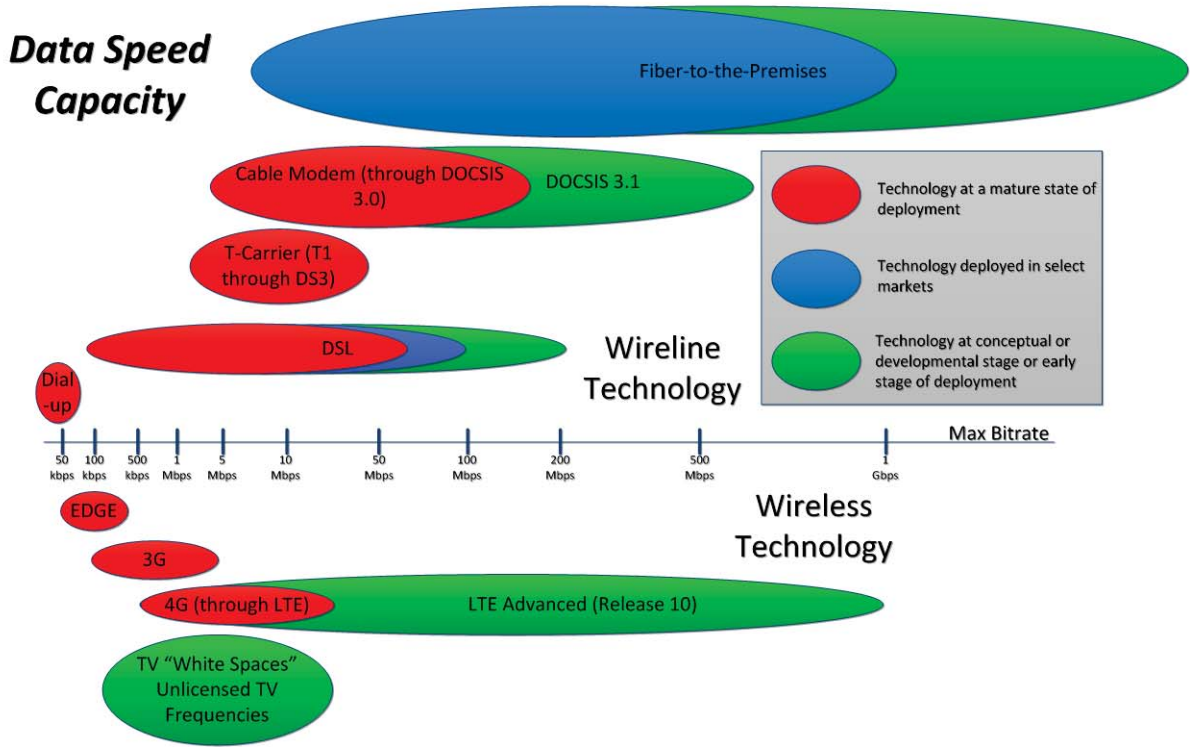

[16] Including multiple input multiple output (MIMO) antennas

4. Cable Operators Are Increasing Capacity Through Incremental Evolution

Cable system subscribers are using the systems in profoundly new ways that were envisioned neither in the design of the systems nor in the operators' near- to mid-term business plans. As an example, more users are seeking third-party, "over-the-top" (OTT) programming—streaming video content (both fully produced channels and programs, and consumer-produced media found on YouTube or social media sites) delivered via a consumer's Internet connection to a television, tablet, smartphone, or other compatible device. The change is technically challenging because this content comes from outside the cable system and the cable operator's programming arrangements, through external Internet connections, and is growing in a rapid and unpredictable way.

Notably, too, cable operators are broadening their public and subscriber Wi-Fi offerings, as well as seeking ways to utilize their infrastructure to provide additional capacity to commercial wireless carriers (i.e., backhaul from cell sites). Wi-Fi and other wireless technologies can be placed in and alongside the cable operator's infrastructure in the right-of-way, in cable hub facilities, and at the customer premises. By themselves or in collaboration with other wireless carriers, cable operators are positioned to become serious wireless service providers.

This need for growth, juxtaposed against the technical limitations of the cable systems, implies that cable operators nationwide will need to continually update their systems over the next five years and beyond to be able to support new consumer applications and remain competitive with other technologies such as FTTP.

It is not possible to fully foresee the evolution of the various hardware and software strategies the cable companies will eventually pursue—just as it is impossible to accurately predict the exact growth of broadband demand. We know with some confidence, however, that the cable industry is seeking to avoid or at least delay the need to replace their networks with fully fiber infrastructure because the cost of such an upgrade would be extremely high.

The likelihood is that, in the next five to 10 years, cable operators will introduce significant upgrades in electronics (as opposed to wholesale replacement of coax with fiber) such as DOCSIS 3.1 advanced cable modem technology, and will need to continue incremental improvements in their cable physical plant and headends. Cable operators may reallocate spectrum between upstream and downstream directions

to make the capacity more symmetrical. They may also attempt to increase the coaxial cable bandwidth beyond 860 MHz and 1 GHz, up to 1.7 GHz.[17]

The cable operators' goal will be to develop new applications to meet consumers' demand for multi-screen video (i.e., a seamless ability to watch content on not just televisions, but also tablets, smartphones, and computers), OTT, and improved navigation among the variety of content options available to them.

Two potentially complementary evolutionary steps on the horizon for cable infrastructure are the upgrade to DOCSIS 3.1 and the move toward EPOC. Each can improve the performance and capabilities of the HFC architecture—and each is consistent with the industry's eventual transition to an Internet Protocol (IP)-centric high-capacity network.

Internet Protocol (IP) migration is the primary evolutionary path for cable networks. Standard IP protocols (software code) govern how the Internet operates, as well as how communications travel over the Internet (or Intranets—internal, private networks resembling the Internet). IP communications are organized in packets; as they travel on a network from their source to their destination, they are guided by router devices, which direct the packets based on their destination addresses and other information. Because of the efficiency, effectiveness, and widespread adoption of IP networking—as well as the ubiquity of the Internet as a conduit for all types of communications—data, video, and voice communications are increasingly becoming IP-based and converging toward common IP platforms.

In line with this convergence, cable companies are increasingly using IP technologies in their systems, even in parts not associated with the Internet or the cable modem data service. For example, the operators' backbone video transport (between programmers, centralized cable operator locations, regional system headends, and operations centers) is now mostly IP-based.

---

[17] Neil Geary, "HFC Evolution, What's Left?", *Proceedings Cable Congress Amsterdam*, http://cablecongress.com/wp-content/uploads/cablecongress/2014/03/Geary-Neil.pdf (accessed August 31, 2014) and Brian Santo, "The Cable Show: Hey, do you remember the future?", http://www.cedmagazine.com/news/2012/05/the-cable-show-hey-do-you-remember-the-future, (accessed August 31, 2014).

4.1 Potential Upgrades to Cable System Electronics

4.1.1 Upgrade from DOCSIS 3.0 to DOCSIS 3.1

In most of its systems, Comcast uses the current industry-standard cable technology known as Data over Cable Service Interface Specification version 3.0 (DOCSIS 3.0) for data provisioning. DOCSIS 3.0, which was first released in 2006,[18] makes it possible for cable operators to increase cable modem capacity relative to earlier technologies by bonding multiple channels together.

The DOCSIS 3.0 standard requires that cable modems and their associated backbone components be able to bond at least four 6 MHz channels (that is, use at least the same amount of channel spectrum as four analog television channels). With four channels of capacity in each direction, DOCSIS 3.0 provides aggregate speeds of approximately 160 Mbps downstream and 120 Mbps upstream, shared by the users in a segment of the cable system.[19] A cable operator can carry more capacity by bonding more channels, up to the limit of the cable modem termination system (CMTS) installed at the operator headend or hub facility.

The cable industry is now actively developing the DOCSIS 3.1 standard (also referred to as "Gigasphere"), which will make it possible to:

- Aggregate the available capacity on the system into larger, more usable blocks rather than 6 MHz analog television channel blocks,
- Increase the capacity and flexibility of the system, and
- Create an architecture more consistent with migrating the non-IP traffic (i.e., TV channels) to an IP format.

[18] "CableLabs issues DOCSIS 3.0 Specifications enabling 160 Mbps," August 7, 2006, http://www.cablelabs.com/news/pr/2006/06_pr_docsis30_080706.html

[19] Segment (or node) sizes depend on the specific cable system, but are typically a few hundred homes or businesses. Typical cable industry practice is to reduce the segment size or add channel capacity when the peak utilization reaches a particular threshold. This is typically done in a case-by-case, incremental way, for the part of the cable system with the need.

DOCSIS 3.1 is an evolution of DOCSIS 3.0 that uses a technique called the Orthogonal Frequency Division Multiplexing (OFDM) modulation scheme,[20] which is also used by technologies such as DSL, LTE, WiMAX, and Wi-Fi. The OFDM scheme spreads aggregated IP traffic over a number of much smaller "channels," or subcarriers, that are between 10 KHz and 50 KHz wide (Figure 6); these small channels are "orthogonal" to each other in the sense that they can be efficiently placed into much larger spectrum blocks than the 6 MHz blocks currently used by TV channels. And, despite having less guard spacing between then, the channels do not interfere with each other—meaning that the data subcarriers can mitigate the loss of data (or signal attenuation) during transmission.

Figure 6: Representation of OFDM Channel

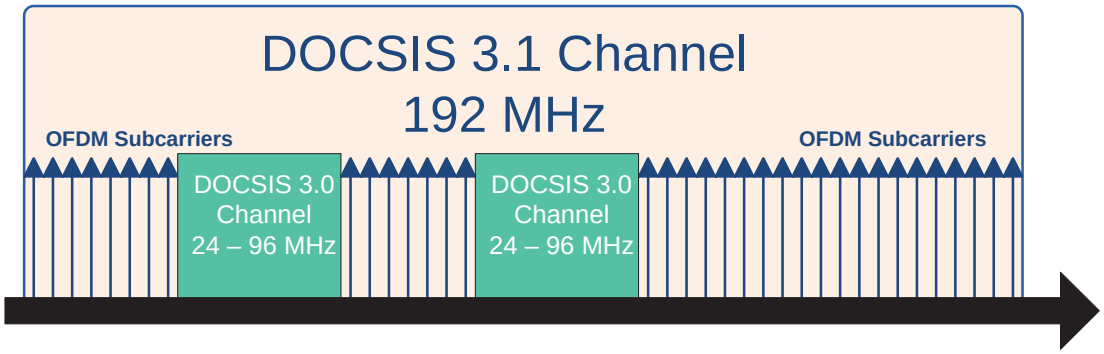

DOCSIS 3.1 will also be able to implement higher-order data encoding rates (namely 4096-QAM in place of the existing 256-QAM)[21] using advanced OFDM-based electronics as discussed and by incorporating better error correction techniques such as Forward Error Correction (FEC) and Low Density Parity Check

[20] A modulation scheme spreads data on a carrier signal by using different combinations of the amplitude and/or phase of the carrier signal.

[21] The number "X" in the X-QAM modulation refers to the number of possible combinations in the modulation scheme—the combinations of distinct types of changes in amplitude and/or phase in a signal. More speed requires higher-order modulation schemes, but higher-order schemes are more sophisticated to design and build and more sensitive to noise and imperfections in the signal. In the most commonly used scheme in a cable system, 256-QAM, there are 256 combinations changes in amplitude or phase. 256 is also 2^8, and 256 combinations can be depicted mathematically in the full range of combinations of eight digits of "0" or "1." In a 256-QAM (2^8-QAM) channel of a given bandwidth, the theoretical capacity is [channel width in bps] x 8. Assuming use of a typical 6 MHz analog television channel, the theoretical channel capacity is 6 Mbps x 8 = 48 Mbps. With four channels, this becomes 192 Mbps. There is typically communications overhead and interference, so the real aggregate capacity is lower. If a cable operator is able to use 4096-QAM (which requires a less noisy environment than current cable systems), the theoretical capacity for the 6 MHz channel becomes 6 Mbps x 12 = 72 Mbps, or 296 Mbps for four channels.

(LDPC). This, in turn, will make data transmission more spectrally efficient (i.e., more data (bps) within the limited amount of spectrum (Hz)).

DOCSIS 3.1 also proposes to include electronics to reallocate the spectrum balance between upstream and downstream directions, so that a larger amount of spectrum can be allocated to upstream traffic and cable systems can better support interactive applications. Reallocating the balance between the downstream and upstream directions will require modification or replacement of many components in the outside plant of the cable system.

The cable industry claims that DOCSIS 3.1 will provide 10 Gbps downstream capacity and 1 Gbps upstream. This will not be possible for most actual cable systems—a typical system with 860 MHz capacity might have the first 192 MHz assigned to upstream, leaving approximately 660 MHz for downstream.[22] Even with 10 bps/Hz efficiency, the actual downstream capacity for a shared node area would be closer to 6 Gbps than 10 Gbps, and that capacity will be aggregated among a few hundred users.

On the other hand, expansion of downstream spectrum to 1.2 GHz (and maybe up to 1.7 GHz) is also being considered,[23] but this is still under evaluation and would require significant changes in network hardware. It is also important to note that higher-order QAM, such as 4096-QAM, will likely require improvement in the quality of the cables in the system and replacement of drop cables to subscriber residences.[24]

Also, while DOCSIS 3.1 is designed to be backward-compatible to DOCSIS 3.0, a customer will need a DOCSIS 3.1 modem to have DOCSIS 3.1 speeds.[25] The deployment of DOCSIS 3.1 on cable company

---

[22] Almost all cable systems in the U.S. currently have less than 50 MHz of bandwidth in the upstream direction.
[23] "An evolutionary approach to Gigabit-class DOCSIS," *CED Magazine*, July 5,2012, http://www.cedmagazine.com/articles/2012/07/an-evolutionary-approach-to-gigabit-class-docsis
[24] Leo Montreuil and Rich Prodan, "EXAMINATION OF SPECTRAL LIMITATIONS IN HFC PLANTS," Meeting Material, IEEE 802.3 EPoC Study Group – July 2012, San Diego, CA, http://www.ieee802.org/3/epoc/public/jul12/montreuil_01a_0712.pdf.
[25] "ARRIS Proposals for the Next Generation- Cable Access Network," *IAMU Broadband Conference*, April 10, 2013, http://www.iamu.org/documents/filelibrary/broadband_images__docs/2013_broadband_conference/BentonDOCSIS_3_D10CAA25B6946.pdf.

networks is expected to begin in late 2014 or early 2015,[26] with large-scale deployments now expected in 2016 or 2017.[27]

4.1.2 Ethernet PON over Coax (EPoC) Architecture

One possibility being considered by the cable industry for next-generation cable architecture, beyond simply upgrading DOCSIS on cable systems, is to reconfigure the cable system to operate with new electronics architecture resembling the PON architecture used by many FTTP operators. Again, the upgrade would enable the cable operator to obtain more capacity and make the system more compatible with full IP data and video applications, and would be a way to make progress without wholesale replacement of the coaxial cable with fiber.

The FTTP PON architecture consists of a series of unpowered optical splitters that are used to provide access to multiple premises over fiber optic cable alone, as opposed to a hybrid fiber/coax network. There are two main components in a PON—the OLT (Optical Line Terminal) and ONU (Optical Network Unit), which are similar to the CMTS and cable modem, respectively.

The cable TV PON architecture standard proposed by the IEEE is called Ethernet PON over Coax (EPoC). EPoC could potentially provide 10 Gbps speeds over the existing hybrid fiber/coaxial (HFC) architecture and further delay the need for cable operators to extend fiber. EPoC standards are currently in development and are scheduled to be complete by 2015.[28]

EPoC uses the same headend/hub optical equipment and user electronics as an FTTP operator, but with the existing cable TV system sitting-in between these components. At the locations of the current cable TV neighborhood node,[29] there would be a new device that would convert the communications on the

---

[26] "Cable Show 2013:CTOs say DOCSIS 3.1 will save Cable's Upstream," *Multichannel News,* June 10 2013, http://www.multichannel.com/technology/cable-show-2013-ctos-say-docsis-31-will-save-cable%E2%80%99s-upstream/143819.

[27] "DOCSIS 3.1 Speeds Ahead," *Multichannel News,* April 28, 2014, http://www.multichannel.com/news/news-articles/docsis-31-speeds-ahead/374179.

[28] " EPoC: Is Ethernet over Coax the Next Big Step?," *Broadband Technology Report,* December 14,2011, http://btreport.net/2011/12/epoc-is-ethernet-over-coax-the-next-big-step/.

[29] The node is the device in the HFC cable system that sits in each neighborhood, between the fiber and coaxial portions of the cable system. The placement of the node determines the coaxial segment size of the cable system, and therefore is the one of the most important parameters in determining the capacity and speed that a customer is provided on the system.

fiber to separate Ethernet communications streams over the coaxial cable to each premises. The user would access the EPoC system with a device resembling the FTTP PON ONT user electronics, but with a coaxial network interface. The user would receive a fully IP Ethernet service, similar to what a user of an FTTP network would receive, but would still be constrained by the bandwidth limitations of the coaxial cable.

EPoC is conceived to coexist with other cable services, so a cable operator could transition to it while still providing traditional DOCSIS and digital television services over other parts of the channel spectrum.

The advantage of EPoC relative to the current cable system is that, once operational, it would allow a cable operator to virtually provide a dedicated IP Ethernet connection to each customer in a more efficient and direct way than using DOCSIS cable modems. It would also allow cable operators and FTTP operators to be in the same marketplace for headend, hub, and user premises equipment—thus creating economies of scale.

However, it is important to note that there is no magic or free lunch in the EPoC architecture. If the coaxial portion of the cable system is not upgraded to fiber, the customers on the network will still be constrained by the physical capacity of that part of the system, even if a more efficient architecture sits on top. And, as cable operators push for spectral efficiency (bits per Hz) through more demanding modulation schemes, the communications traveling over the network become even more sensitive to imperfections in the cable plant, requiring the cable operator to replace the drop cables to the home[30] or perform other costly work on the outside cable plant.

In addition, the claimed 10 Gbps speed is still an aggregated 10 Gbps, shared by all users on a segment of the cable system. The per-user speeds will depend on the amount of fiber optics in the system. If the cable operator does not expand its fiber, the likely average speeds are in the 100 Mbps downstream and 25 Mbps upstream range—as in the case of DOCSIS 3.1.

4.2 Internet Protocol (IP) Migration and Convergence

[30] Leo Montreuil and Rich Prodan, "EXAMINATION OF SPECTRAL LIMITATIONS IN HFC PLANTS," Meeting Material, IEEE 802.3 EPoC Study Group – July 2012, San Diego, CA, http://www.ieee802.org/3/epoc/public/jul12/montreuil_01a_0712.pdf (accessed September 8, 2014).

Transition to an all-IP platform is a scalable and cost-effective strategy in the long run, allowing the operator to reduce ongoing costs; increase economies of scale with other network, communications, and media industries; and operate a more uniform and scalable network. For example, after the transition of video from separate digital video channels to the IP data (cable modem) network, there would not need to be a separate set of video transport equipment in the headend or hubs, nor a set of dedicated video channels. The transport equipment and the spectrum would become uniform and converged to a single IP platform. Thereafter, network upgrades could be carried out solely based on the evolution of high-speed networking architecture, independent of video processing capabilities.

4.2.1 Converged Cable Access Platform (CCAP)

The cable industry sees the Converged Cable Access Platform (CCAP) as the next step on the road to an all-IP-based content delivery model for most cable operators in the United States. CCAP represents CableLabs'[31] consolidation of two separate data and video convergence projects—the Converged Multiservice Access Platform (CMAP) initiative led by Comcast and the Converged Edge Service Access Router (CESAR) project by Time Warner Cable.[32]

CCAP is designed to merge the hardware for DOCSIS IP data and digital video channels (also known as Quadrature Amplitude Modulation (QAM) video) into one platform. Cable networks now assign distinct blocks of available bandwidth to different types of services—such as video on demand (VoD), high-definition TV (HDTV), and Switched Digital Video. The current technique of assigning bandwidth is relatively fixed, and requires planning and effort to reallocate when customer demand or technologies change. CCAP is a converged IP platform that allows more dynamic provisioning of bandwidth that adapts to users' demand for a particular type of service.

Because many separate components of the video and data/voice platforms will be consolidated, operators will require less headend space and power. At the same time, the network will become more

[31] Cable Television Labs (CableLabs) is a non-profit research and development consortium founded in 1988 which pursues advancements in cable telecommunications technologies and its integration by the cable industry. *See:* http://www.cablelabs.com/about/overview/.

[32] "CableLabs Updates Technical Report on Converged Cable Access Platform," June 14, 2011, http://www.cablelabs.com/news/pr/2011/11_pr_ccap_061411.html.

scalable and flexible—to support the future demand for data and advanced video services, including over-the-top (OTT) video accessed from third parties over the cable modem system.

The transport portion of the cable headend or hub typically consists of 1) the CMTS, which is the headend/hub component of the IP cable modem network, and 2) QAM modulators that insert the digital video into the cable system (Figure 7).

By integrating the functions of the CMTS and QAM modulators into a single architecture (Figure 8), CCAP will reduce the number of interfaces (RF ports) and associated combining hardware that cable operators need to support a greater variety of video content and access devices.

Figure 7: Typical Headend

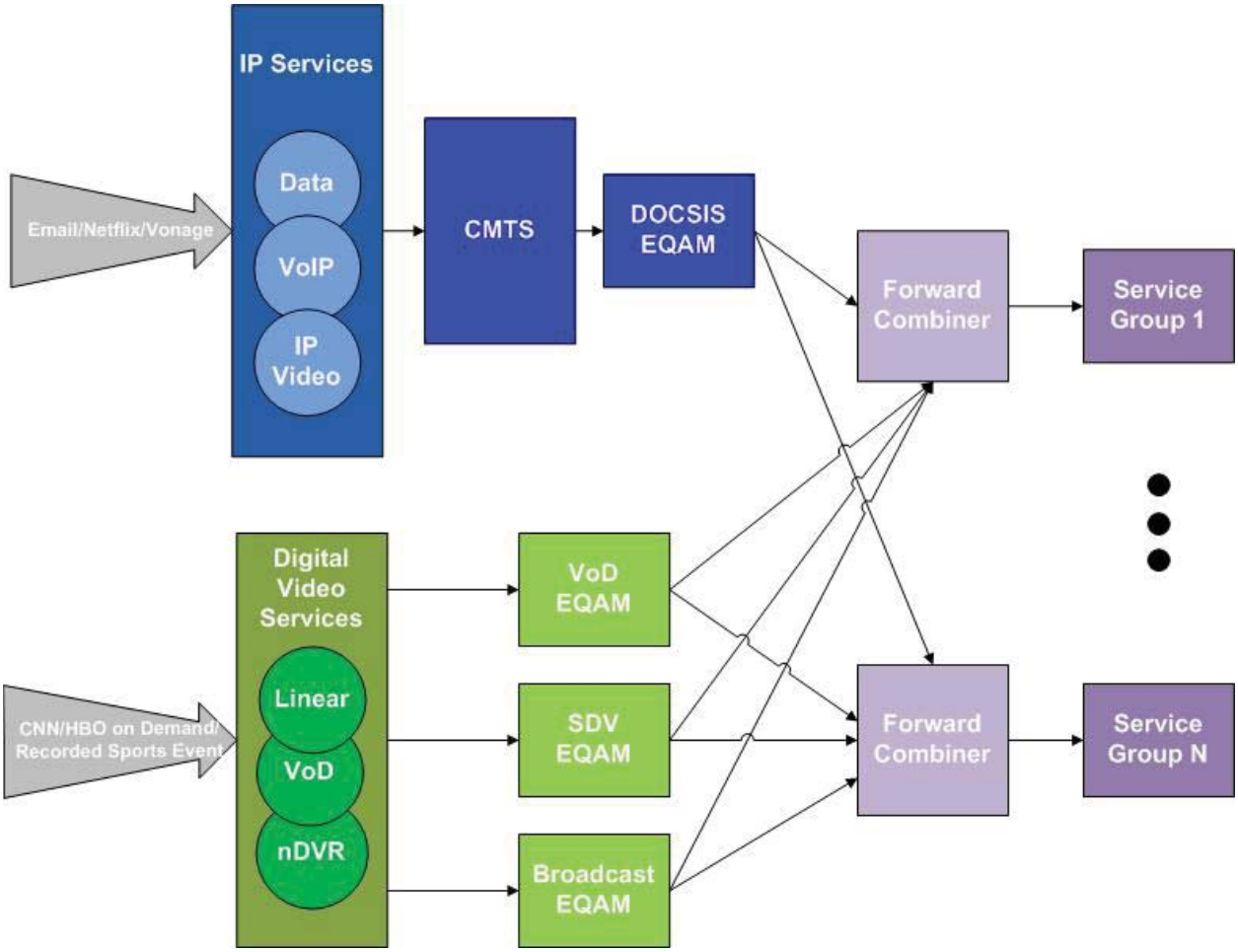

Figure 8: Headend with CCAP

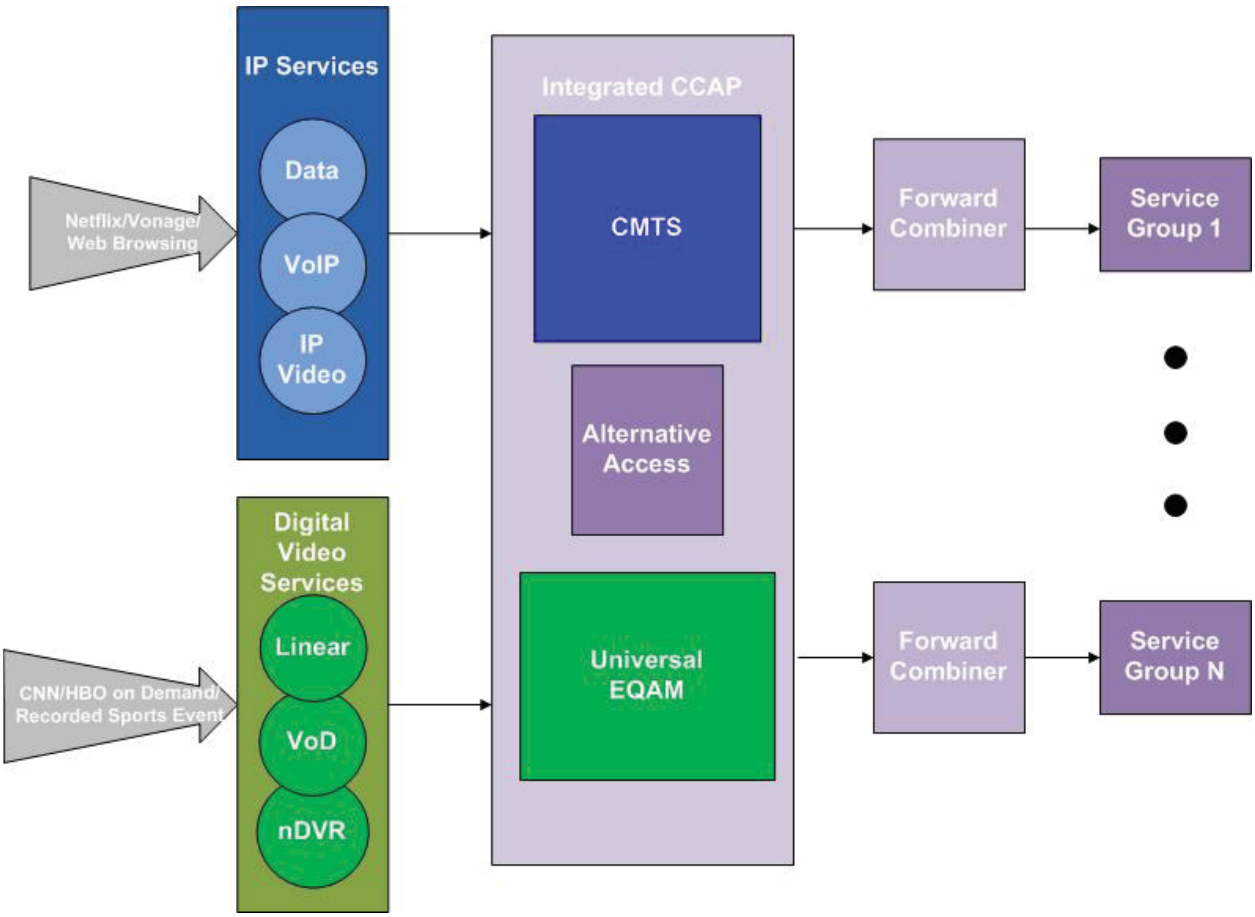

Comcast has completed an operational readiness trial of the CCAP architecture in the northeast United States and is now deploying it in several markets. IP Transport of Video on Demand (VoD)

The popularity of video on demand (VoD) continues to increase, both in the content provided by the cable operator and for OTT video provided by third parties and viewed using the cable modem system. In most cable systems, the backbone network delivers the requested content from a central server (or, potentially from a cached location in the headend or hub) and sends it to a QAM modulator to reach a specific user's set-top box.

With the introduction of IP-ready set-top devices, cable operators can begin to migrate VoD service to the IP network, essentially streaming it to the set-top box from the headend or hub DOCSIS CMTS. This change will enable the migration of VoD from the video portion of the cable system into the data

platform. While the migration will increase the utilization of the DOCSIS cable modem platform, the change will also be able to provide the benefits and long-term economies of IP convergence, as well as more functionality for both the cable operator and the customer, such as the opportunity to view and manage both IP-originated content (e.g., YouTube) and cable operator video-on-demand on the same home platform, and to draw on all of the viewing for targeting personalized advertising at the viewer.

4.2.2 Multicasting—IP Transport of Video Channels

Traditional Internet video can waste capacity, especially in a "channel" video environment, because it sets up a new stream from the source to each viewer. Even if many people are watching the same program at the same time, a separate copy is streamed all the way from the server or source to the user (Figure 9). Multicasting is a method of transmitting data to multiple destinations by a single transmission operation in an IP network.

Using multicasting, a cable operator can send a program to multiple viewers in a more efficient way. A multicast-aware network sends only a single copy of the program (known as a multicast stream) from the server or source through the various network routers (in this case, through the cable modem system). When a viewer selects the program, the viewer's device (set-top converter or computer) connects to the multicast stream. The stream exists only once on the network, so even if the viewer and many neighbors are viewing the same stream, there is only one copy being sent through the network (Figure 10).

Figure 9: Unicast IP Network Carries Multiple Copies of Single Video Channel

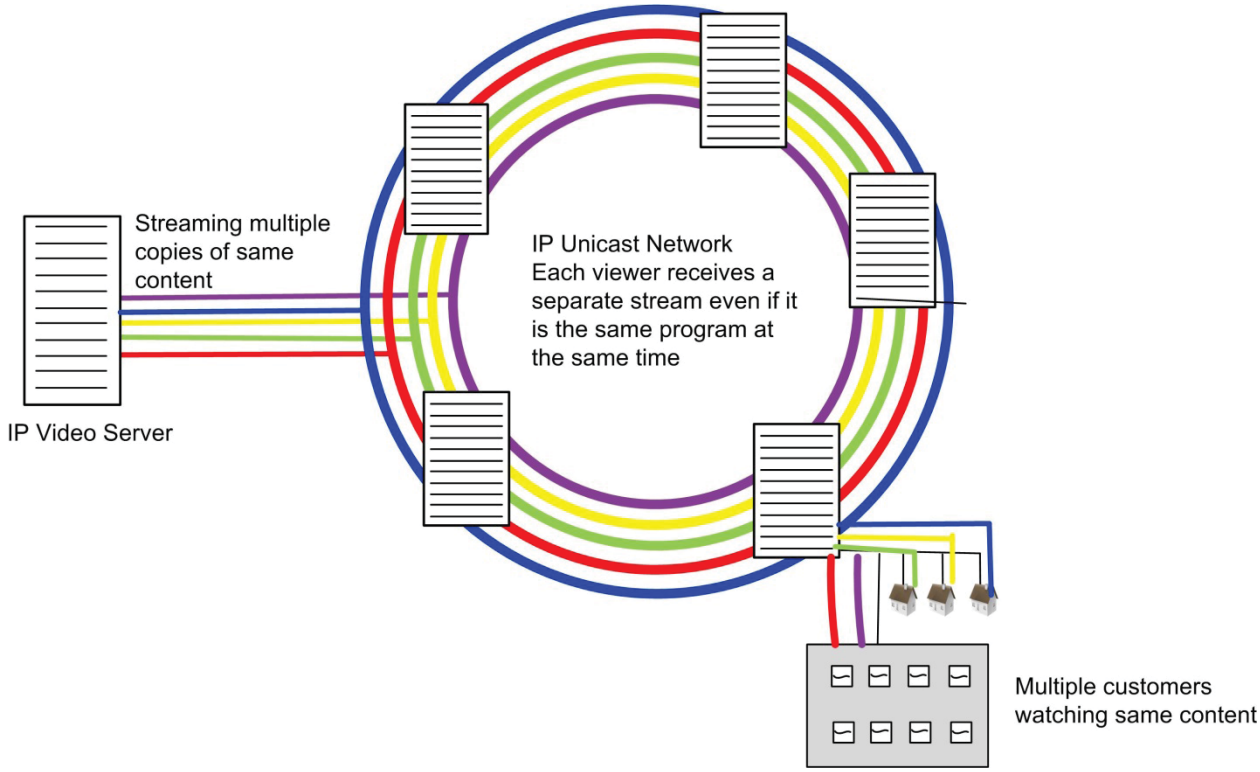

Figure 10: Multicast IP Network Carries Single Copy of Single Video Channel

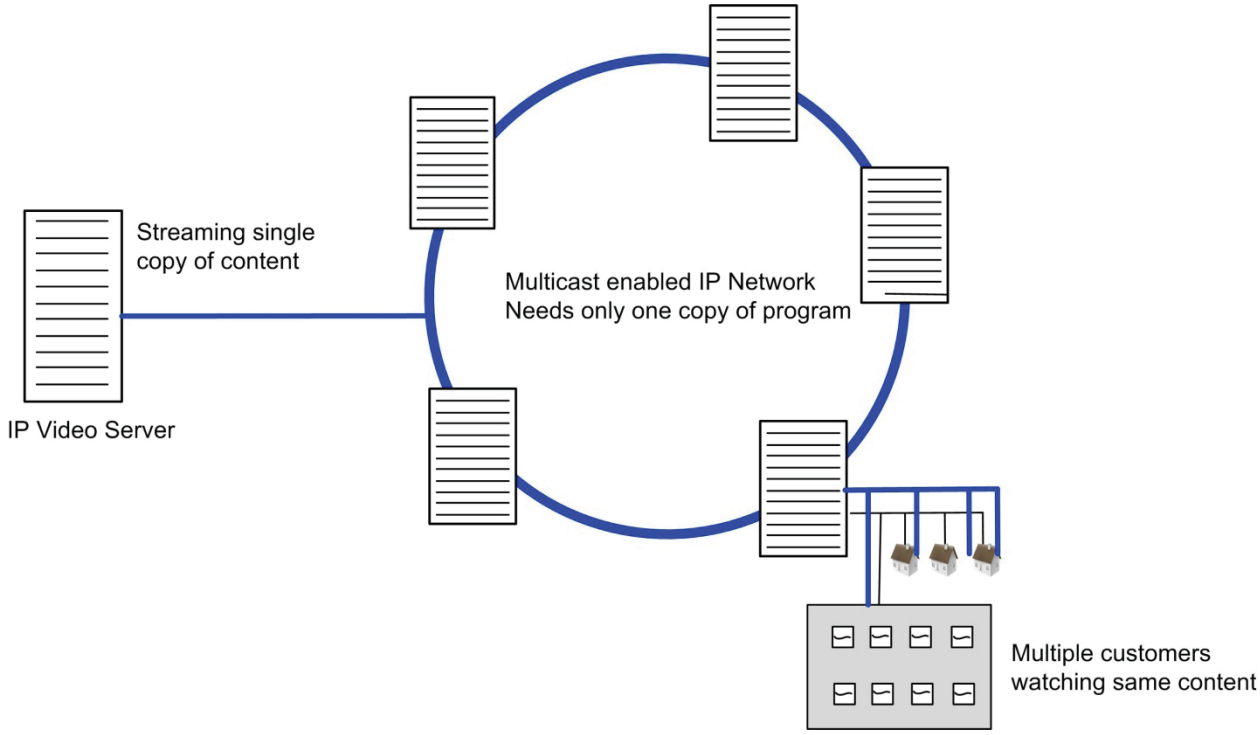

Multicast is a feature that was optional in traditional IPv4 networks but standard in IPv6. As multicast-capable and multicast-aware routers and set-top converters become standard, the cable operator can consider migrating all video programming to IP (not just video-on-demand), because multicast provides a means to carry traditional channels over IP without wasting the backbone capacity.

4.3 Other Evolutions of Cable-Related Infrastructure

4.3.1 Migration from MPEG-2 to MPEG-4 and Higher Compression Standards

Video compression is a powerful tool that can carry high-quality video over a relatively low-rate data link. Compression is part of almost all digital video systems. HDTV and standard-definition digital video use compression, as does most video streamed over the Internet.

Compression takes advantage of the amount of repetition and symmetry within a single image, and the stability of video over time. Without compression, full-motion, high-quality video requires over 100 Mbps. With compression, the same quality video can be provided using only a few Mbps. Cable operators compress video with a codec device at the headend or programming source.

Cable operators typically use Moving Picture Experts Group-2 (MPEG-2) standards for the programming stream from the system to the cable set-top converters. MPEG-2 has been the standard on cable systems since the introduction of digital video on cable systems. Using MPEG-2, the cable operator can select the level of compression based on available capacity, the demand of the video signal (sports and movies have more motion than other programming, so compression can be more noticeable), and tolerance for the artifacts of video compression, such as picture freezing or pixilation. With MPEG-2 compression, cable operators typically place two to three HDTV signals in a 6 MHz channel block.

Migrating to more advanced compression has the advantage of freeing up bandwidth for more programming and cable modem capacity. Ideally, increasing compression is done in a judicious manner, where the benefits are achieved through faster and better hardware and software, not simply by crudely “dialing up” the compression on existing systems. Most codecs have variable compression ratios, but selecting too high a ratio can result in freezing and blocking of the picture, and washed out color.

MPEG-4 (also known as H.264) is one means of increasing compression without sacrificing picture quality. H.264 was completed in 2004 and is now utilized in Blu-ray, high-definition DVD (HD DVD), and

Verizon FiOS HDTV programming; it provides about twice the compression ratio of the previous version (MPEG-2). Many existing devices, including set-top converters, are not MPEG-4 compatible, so cable operators cannot offer MPEG-4 (or any other higher compression) unless the subscriber has a compatible converter.

The availability of greater processing power and parallel computing architectures has led to the establishment of a successor for H.264 video compression—the H.265 standard, which is also known as High Efficiency Video Coding (HEVC). H.265 is primarily envisioned for the next generations of ultra-high-definition video, as well as mobile video content and applications where only software upgrades are needed to decode HEVC.

H.265 carries out compression in a different manner than H.264. Instead of using a grid of small squares to segment a picture for compression, H.265 utilizes a variety of shapes that more efficiently segment and store information about changes across a picture. This scheme will offer significant savings in bandwidth over its predecessor and ultimately reduce the costs associated with transmission; H.265 is capable of providing better quality video at around 50 percent of the bit rate of H.264.

4.3.2 Introduction of Ultra High Definition Television (UHDTV)

H.265 and other recent advancements in video encoding have facilitated the next phase in consumer video: Ultra High Definition Television (UHDTV). UHDTV improves picture resolution from 1280 x 720 /1920 x 1080 pixels (HDTV) to 7680 x 4320 pixels. UHDTV comes in two flavors—4k (also called UHDTV1) with 2160 pixels, and 8k (UHDTV2) at 4320 pixels. This means that UHDTV at the lower 4k resolution has about four times the pixels of HDTV, while 8k would boost it to 16 times. Therefore, even though this technology uses high compression ratios, implementing 4K and 8K technologies will significantly increase the demand for bandwidth on a system.

UHDTV will easily be able to translate into the mobile space due to the more efficient processors and software integration capabilities on new phones. However, the full scope of this technology will only be realized on larger screens. UHDTV will provide viewers with 60 degrees of field of view, which is almost double what is available today with HDTV, thus portraying a greater amount of detail and better zooming capabilities. It also decreases the viewing distance needed to convey a noticeable difference in picture quality, hence promoting the use of larger displays in smaller areas to provide a more immersive experience.

An important potential application of UHDTV could be the development of glasses-free 3DTV. This might be facilitated by UHDTV's large number of additional pixels, which could present the different display angles required for 3D viewing.

At NCTA's *The Cable Show 2013*, Comcast CEO Brian L. Roberts demonstrated the first public U.S.-based transmission of 4K Ultra HD video.[33] The UHDTV displays currently available on the market have access to only a limited amount of 4k programming content; the rest is upconverted HD content.

4.3.3 Evolution of Set-Top Boxes

Since the 1980s, set-top boxes (STBs) have been an integral part of the television ecosystem as a means for accessing video programming signals from cable, satellite, or IP sources and delivering them to televisions. Within the cable industry, STBs are typically proprietary leased equipment that act as gateways performing the functions of user authentication, digital rights management, and the decryption of video channels. The cable operator's STB is the default input device attached to many Americans' televisions, which may make the STB the primary viewing choice for those users.[34]

Over the course of the past few decades, cable television programming has evolved from being primarily one-directional analog channels to an all-digital environment that consists of a mix of digital QAM and two-way IP-based communications. With the launch of digital TV channels, HD content, and interactive programming, new proprietary gateways and adapters such as digital transport adapters (DTAs) and their HD-equivalent, HD-DTAs, are needed to interconnect TV sets for viewing subscription-based content. The costs associated with the purchase/renting and powering requirements of this equipment have caused a considerable amount of dissatisfaction among many subscribers.

---

[33] "Comcast demonstrates the future of broadband speed and 4k Ultra HD Video," Comcast Corp., Jun 11, 2013, http://corporate.comcast.com/news-information/news-feed/comcast-demonstrates-the-future-of-broadband-speed-and-4k-ultra-hd-video.

[34] See, for example: Ben Drawbaugh, "The Xbox One and live TV – here's what to expect," *Engadget*, June 19, 2013. http://www.engadget.com/2013/06/19/xbox-one-live-tv-microsoft-history-what-to-expect/

In 1998, in order to resolve this issue, the FCC promoted the development and adoption[35] of standards-based embedded technology for televisions and STBs, namely CableCard/tru2way in place of a cable provider's leased STB. However, various complexities in implementation, additional expenditure by the cable operators, and several other factors led the cable industry to resist adopting the technology.

A replacement technology called AllVid was proposed to create a competitive market for network-agnostic gateways and adapters in 2010.[36] By this time, there was a proliferation of IP-based video content (OTT) providers such as Netflix, Amazon Instant, and Hulu, as well as primarily IP-based retail media gateways and digital video recorders (DVR) such as Apple TV, Xbox 360, Roku, Boxee, and TiVo. The AllVid hardware was meant to serve as a universal adapter and navigation device for all types of video content from a variety of sources, including cable, satellite, and IP-based platforms. Subsequently, the cable industry tried to discourage the FCC's new initiative,[37] claiming that the rising number of IP-based video-capable retail devices had supplanted the need for standards-based hardware. At the time of this writing there seems to be limited development toward a platform (such as AllVid) that would eliminate the need for consumers to purchase/lease additional equipment from cable operators.

New STBs recently introduced by cable operators can deliver video content from cable operators both to televisions and IP-based user electronics (such as tablet computers or PCs) by converting encrypted QAM cable channels to IP video provided through Wi-Fi or Ethernet[38,39]—indicating that a strategy of collaboration is being pursued between cable operators and independent retailers. Also, the latest STBs offered by cable operators have cloud-based[40] user interfaces and remote video storage mechanisms that move much of the complex computational processing and data caching space from the

---

[35] "First FCC Report and Order: Commercial Availability of Navigation Devices," FCC, June 06,1998, http://transition.fcc.gov/Bureaus/Cable/Orders/1998/fcc98116.pdf.

[36] "All about the FCCs AllVid," *LightReading, April 23,2010,* http://www.lightreading.com/dvrs/all-about-the-fccs-allvid/240118222.

[37]" NCTA to FCC: Call Off AllVid," *LightReading*, January 26,2011 http://www.lightreading.com/blog/internet-video/ncta-to-fcc-call-off-allvid/240128956?queryText=allvid.

[38]" New DTA will extend Cable TV to Retail Devices," *LightReading*, March 11,2013http://www.lightreading.com/internet-video/new-dta-will-extend-cable-tv-to-retail-devices/240150431?queryText=allvid.

[39]"Comcast begins to connect Boxees cloud DVR," *Multichannel News,* April 11, 2013, http://www.multichannel.com/cable-operators/comcast-begins-connect-boxees-cloud-dvr/142668.

[40] Cloud Computing is a broad term used to depict software or services delivered over a network (typically the Internet).The processing capabilities and data storage servers are located remotely on a pool of computing resources.

consumers' hardware to the network—potentially reducing consumer power consumption from approximately 25 watts to approximately 15 watts.[41]

[41] EnergyStar Set Top Box Qualified Product List, http://www.energystar.gov/ia/products/prod_lists/set_top_boxes_prod_list.pdf.

5. Evolution of Applications and Video Content Presentation over Cable

Along with enhancements to the underlying medium of content delivery, there have been improvements in applications and services that contribute to the overall cable consumer experience. These are diverse items, but they collectively point to increasingly interactive IP communications over the cable system—communications that are likely to continue to grow.

In terms of the cable system, these enhancements are each likely to 1) increase utilization of the cable system capacity, 2) increase the use of IP-based communications, relative to the traditional QAM digital video fixed "channels," 3) increase the use of narrowcast content, relative to traditional broadcast communications, and 4) increase the use of *continuous* streaming media content, relative to highly variable downloadable communications (such as e-mail or traditional point-and-click Web downloading).

5.1 Multi-Screen Video

Most U.S. cable subscribers view content on a variety of stationary and mobile screens, including computers, TVs, smartphones, tablets, and game consoles. TVs still dominate the landscape for multimedia entertainment—both for cable programming and over-the-top programming (see Section 5.2). However, more often than not, consumers are also simultaneously using another device.[42] This has created an immense need for seamless "multi-screen viewing" across consumer equipment. To offer this, however, each video has to be converted (or transcoded) into formats and resolutions that would be compatible with the different devices, and a consistent user interface, such as a website or home media gateway, needs to be present.

The demand for multi-screen video led to the implementation of the concept of "TV Everywhere" across the industry. Launched in 2009 by Comcast and Time Warner,[43] TV Everywhere means that subscribers can receive the same content on their TVs and other multimedia devices. More recently, in order to

[42] "The New Multi-Screen World Study," Google Research Study, August 2012, http://www.google.com/think/research-studies/the-new-multi-screen-world-study.html.
[43] "Time Warner, Comcast Depart from Hulu Model With 'TV Everywhere,'" Wired, June 24, 2009, http://www.wired.com/2009/06/time-warner-comcast-depart-from-hulu-model-with-tv-everywhere/. *See also:* "Comcast TV Everywhere scorecard: 1.5B and counting," *CED Magazine*, September 14, 2012, http://www.cedmagazine.com/blogs/2012/09/comcast-tv-everywhere-scorecard-15b-and-counting.

improve the multi-screen usage experience, Comcast introduced the "Home Pass," which enabled the automatic authentication of subscribers on various devices within a home (over their Wi-Fi network).[44]

5.2 Over-the-Top (OTT) Programming

Over-the-top (OTT) programming typically refers to streaming content delivered via a consumer's Internet connection on a compatible device. Consumers' ubiquitous access to broadband networks and their increasing use of multiple Internet-connected devices has led to OTT being considered a disruptive technology for video-based entertainment. The OTT market, which includes providers like Netflix, Hulu, Amazon Instant Video, and iTunes, is expected to grow from about $3 billion in 2011 to $15 billion, by 2016.[45]

In order to provision content, OTT services obtain the rights to distribute TV and movie content, then transform it into IP data packets that are transmitted over the Internet to a display platform such as a TV, tablet, or smartphone. Consumers view the content through a Web-based portal (i.e., a browser) or an IP streaming device such as Google Chromecast, Roku, Apple TV, Xbox 360, or an Internet-enabled TV/Smart TV. (Notably, for cable customers whose STBs are the default devices attached to their TVs, viewing OTT over one of these other devices requires switching among input options.)

Given the ubiquity of cable broadband, OTT providers depend on cable operators' DOCSIS-based IP bandwidth to reach many of their end users. At the same time, OTT is seen as a major threat to cable television programming, provided by the very same cable operators, due to its low cost. As a result of this, many cable operators have introduced their own OTT video services to reach beyond the constraints of their TV-oriented platforms and to facilitate multi-screen delivery.[46]

While the nature of OTT video lends itself nicely to VoD, time-shifted programming, and sleek user interfaces, OTT providers have limited control over the IP transport of content to users, which can cause strains on network bandwidth due to the unpredictable nature of video demand. Cable operators have

---

[44] "Comcast Makes Home Pass," *LightReading*, July 5 2013, http://www.lightreading.com/document.asp?doc_id=703307.
[45] "Over-the-Top-Video – "First to Scale Wins," Arthur D Little, 2012 http://www.adlittle.com/downloads/tx_adlreports/TIME_2012_OTT_Video_v2.pdf.
[46] "Cable operators embrace over the top," *FierceCable*, July 2,2013, http://www.fiercecable.com/special-reports/cable-operators-embrace-over-top-video-studios-thwart-netflix-hulu-options.

recently experimented with bandwidth caps,[47] which would reduce subscribers' ability to access streaming video content. It is also technically possible for cable operators to prioritize their own traffic over OTT video streams, limit the capacity available to OTT on their systems, or stop individual OTT streams or downloads.

Some cable operators have attempted to manage OTT on their networks by caching OTT video content from third-party providers (e.g., Netflix) in their data centers to improve QoS and reduce congestion on their backbone network. This also improves the quality of OTT video for viewers.

5.3 Integration of Wireless Communications

With the improvement of the quality and speed of wireless communications, the public has become accustomed to accessing Internet services over wireless technologies, either on a communications link managed by a wireless service provider (i.e., a cellular data plan), on local infrastructure typically managed at a home or business (i.e., a Wi-Fi hotspot), or through a mixture of those two approaches (e.g., a hotspot operated by a service provider, municipality, landlord, or homeowners association).

The ability to deliver cable TV content to consumer devices anywhere, at any time, is highly dependent on the evolution of wireless technologies. Nationwide, cellular service providers operate a mixture of third-generation (3G) and emerging fourth-generation (4G) wireless technologies.[48] The latest 4G LTE (Long Term Evolution) technologies have been rolled out by every major U.S carrier, creating an environment for better access to streaming video. In the near term, the challenges for wireless carriers are for greater capacity, extending network coverage, and efficiently utilizing the limited amount of wireless spectrum. Cable operators are well positioned to mitigate some of these issues with their extensive hybrid fiber/coaxial (HFC) infrastructure and Wi-Fi capabilities. As described in the following

[47] "Comcast tests new usage based internet tier in Fresno," *Multichannel News*, August 1, 2013http://www.multichannel.com/distribution/comcast-test-new-usage-based-internet-tier-fresno/144718.

[48] The strict definition of 4G from the International Telecommunications Union (ITU) was originally limited to networks capable of peak speeds of 100 Mbps to 1+ Gbps depending on the user environment; according to that definition, 4G technologies are not yet deployed. In practice, a number of existing technologies (e.g., LTE Revision 8, WiMAX) are called 4G by the carriers that provide them and represent a speed increase over 3G technologies as well as a difference of architecture—more like a data cloud than a cellular telephone network overlaid with data services. Furthermore, a transition technology called HSPA+, an outgrowth of 3G GSM technology (previously considered a 3G or 3.5G technology, with less capability than LTE or WiMAX), has been marketed as "4G" by certain carriers—so the definition of 4G is now fairly diluted. The ITU and other expert groups have more or less accepted this.

section, they have recently been pursuing synergies with wireless carriers by exploring ways to utilize and extend each other's communication networks.

5.3.1 Mobile Backhaul

One area for greater collaboration between cable and wireless carrier networks is the provision of backhaul from cell sites to core network locations. In a carrier wireless network, cell towers are typically connected (backhauled) to the wired telecommunication network through low-bandwidth circuits. Given the fact that cable operators have infrastructure that is spread out in a pattern that can easily reach cell towers, a relatively small investment in upgrading the fiber portion of cable operator networks for robust Metro Ethernet services will equip them with capabilities for mobile backhaul (Figure 11).[49]

Figure 11: Cable Operator Providing Fiber Backhaul to Cell Sites and Micro/Nanocells

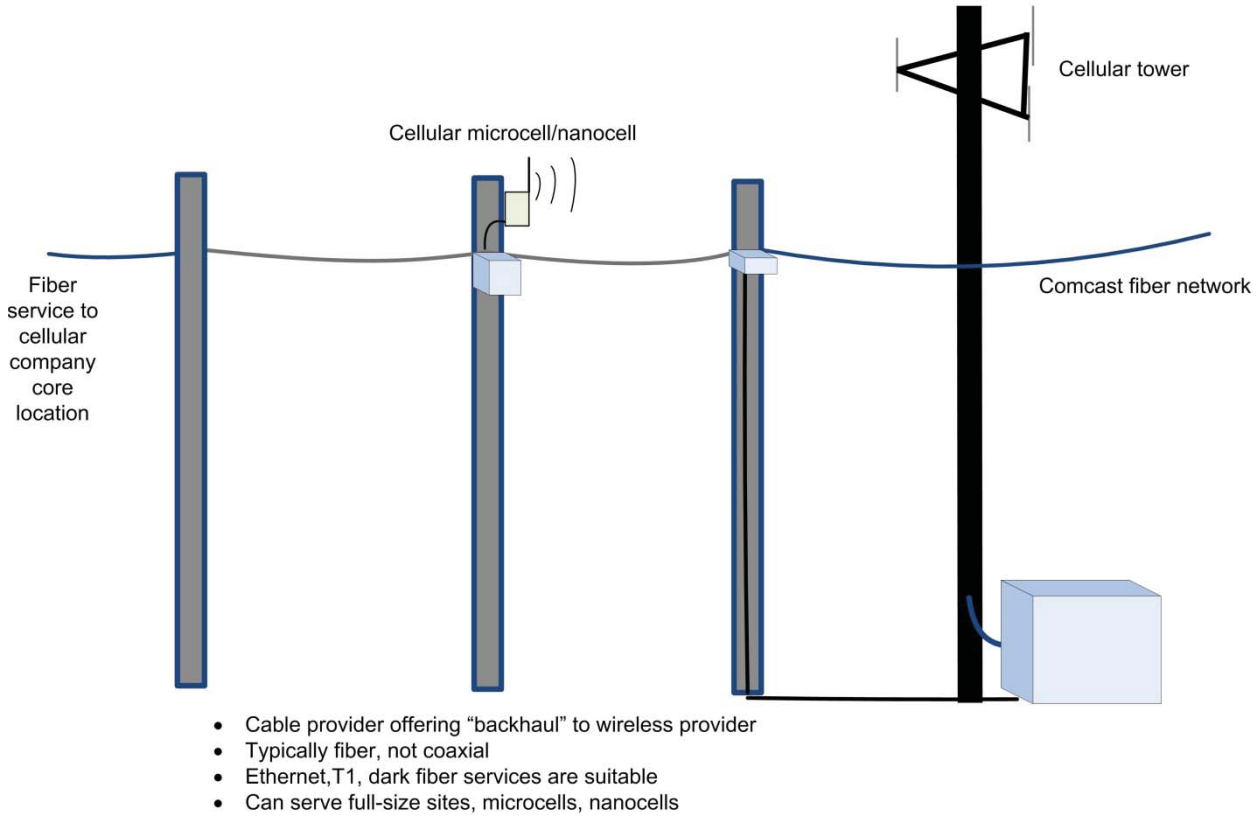

[49] "Mobile backhaul opportunity knocks for cable operators," *CED Magazine*, Feb. 28, 2011, http://www.cedmagazine.com/articles/2011/02/mobile-backhaul%3A-opportunity-knocks-for-cable-operators.

Additionally, the coaxial portion of the cable system (as well as customer premises) may be suitable for small "picocell" devices—miniature cell sites resembling Wi-Fi hotspots that can connect a handful of wireless users to a carrier, typically for indoor locations with poor wireless coverage.

5.3.2 Partnerships with Wireless Carriers

In addition to the greater speeds available on the latest LTE networks, wireless carriers can also promote the usage of video streaming on mobile devices (such as smartphones and tablets) by implementing functionalities that optimize the broadcast of premium TV content on the wireless network. A technique called Evolved Multimedia Broadcast Multicast Service (eMBMS) along with the implementation of new adaptive streaming protocols (in place of buffering) and High Efficiency Video Coding (HEVC, see Section 4.3.1) enables the spectrum to be utilized more efficiently for the provision of TV content by wireless carriers. Verizon Wireless is already providing an NFL Mobile Service that delivers a separate session to each individual user (i.e., unicasting), but eMBMS will enable the broadcasting of live video similar to how TV signals are delivered.[50]

Some cable companies are also offering customers a "Quad Play" of Internet, voice, cable, and wireless services (by reselling wireless phone services). This strategy also provides another portal for extending the reach of cable television and associated services.

5.3.3 Wireless Services by Cable Provider

Wi-Fi enables the delivery of content to multiple TVs, tablets, PCs, and smartphones without the limits of cabling. Cable providers have been offering wireless Internet services for several years through Wi-Fi routers connected to DOCSIS-based cable modems. Comcast and other video content providers are now increasingly pursuing ways to offer wireless transmission of video content on home networks as well as on large-scale roaming networks. Theoretically, Wi-Fi may also enable a provider to offer some of its services from its cable plant to a home or business without installing a cable into the premises.

5.3.3.1 Residential Wireless Services—Wi-Fi and New Technologies

[50] "Verizon's McAdam Sees Broadcast Video over LTE in 2014,"*Multichannel News*, Jan 8,2013 http://www.multichannel.com/telco-tv/ces-verizons-mcadam-sees-broadcast-video-over-lte-2014/141109

Wi-Fi or Wireless Local Area Network (WLAN) technology is based on the IEEE 802.11 standard. WLANs have been able to provide greater bandwidth over the course of their evolution and may potentially create a completely wire-free future for connectivity within the home.

One of the latest versions of the 802.11 standard, 802.11ac, positions WLANs to target the exponential wireless market growth expected over the next few years.[51] The new standard (operating only in the 5 GHz band as opposed to both the 5 GHz and 2.4 GHz bands) has various design enhancements, including:

- Increase in channel sizes up to 160 MHz from a maximum of 40 MHz in 802.11n
- Use of higher modulation and coding schemes such as 256 QAM (an improvement over 64 QAM)
- Greater number of multiple input, multiple output (MIMO) antenna streams (i.e., eight antenna streams instead of four) separated spatially in a manner that improves data rates and performance
- Use of multi-user MIMO, which supports simultaneous transmission to multiple clients, thus more effectively utilizing channel bandwidth

The Wi-Fi Alliance, a trade association that ensures the interoperability of equipment from different vendors, had recently approved 802.11ac technology on various new devices. The relatively faster adoption of this new technology has become a necessary step in order to support the pervasive bandwidth being demanded by mobile applications and the increasing number of devices per user. Backward-compatibility to older standards and 2.4 GHz equipment will be a feature that will be present on most devices for the foreseeable future.

Another standard, 802.11ad—which will offer functionalities closer to peer-to-peer (P2P) applications—has been in development by the IEEE committee to enable the use of the 60 GHz band of radio

[51] "802.11ac: The Fifth Generation of Wi-Fi ," Technical White Paper, Cisco Systems, August 2012. http://www.cisco.com/c/en/us/products/collateral/wireless/aironet-3600-series/white_paper_c11-713103.html (accessed September 8, 2014).

spectrum. It has the capability to transfer up to 7 Gbps.[52] This technology is more suited for high-capacity, line-of-sight links (such as in-room wireless connection) and has the potential to be a highly effective way to communicate between content delivery mediums and user screens—similar to how an HDMI cable or docking station would work, but at greater distances.

5.3.3.2 Roaming Wi-Fi Networks

Cable providers have been able to broaden their wireless service footprints by creating a nationwide roaming Wi-Fi network. Comcast has expanded its Wi-Fi hotspot network, "Xfinity WiFi," to several densely populated areas within its service region to provide wireless Internet access to both subscribers (at no additional charge) and non-subscribers (at a pay-per-time-block rate). In addition, Comcast and four other cable companies—Time Warner Cable, Cox Communications, Cablevision, and Bright House Networks—have collaborated to create "CableWiFi," a Wi-Fi roaming network across the United States. This network allows cable subscribers to access the Internet within the coverage of 250,000 hotspots (as of September 2014) belonging to any of the cable providers in more than a dozen major cities.[53]

In June 2013, Comcast launched a "homespot" network[54] that sets up an additional sub-network on the Wi-Fi gateways deployed in individual customer premises that is accessible to all Comcast subscribers. This model has already been demonstrated in Europe and has the potential to provide millions of hotspots across Comcast's service footprint, enabling roaming access to video and data content.

The expansion of roaming Wi-Fi networks either collaboratively (e.g., CableWiFi) or by individual cable providers (e.g., Comcast's homespot) does not appear to create bandwidth bottlenecks on cable operator networks at the moment. Rather, the networks benefit cellular wireless carriers, which have a new avenue to relieve their network congestion by offloading their data services to cable operators' public Wi-Fi networks. At the same time, wireless subscribers can also direct their traffic to Wi-Fi networks whenever possible to avoid the data caps set by cellular providers.

---

[52] "Amendments in IEEE 802.11ad enable multi-gigabit data throughput and groundbreaking improvements in capacity," Press Release, IEEE Standards Association, January 8, 2013. http://standards.ieee.org/news/2013/802.11ad.html (accessed September 8, 2014).
[53] "Cable WiFi," http://www.cablewifi.com/ (accessed September 11, 2014).
[54] "Comcast unveils plans for millions of Xfinity WiFi Hotspots," press release, Comcast Corp., June 10, 2013, http://corporate.comcast.com/news-information/news-feed/comcast-unveils-plans-for-millions-of-xfinity-wifi-hotspots-through-its-home-based-neighborhood-hotspot-initiative-2.

Appendix A: Glossary of Terms

Asymmetric Data service with more capacity in the downstream (network to user) direction than the upstream (user to network) direction. Asymmetric services are often less costly to deploy and, because many uses of the Internet are heavier in the downstream direction, asymmetric services can suit the needs of many types of users. Asymmetric services are less well-suited to users who host data, who use many interactive multimedia applications, or who frequently upload large files.

Bandwidth Available range of frequencies (or number of channels) over a cable or over the air. Bandwidth is typically measured in the frequency range available (kHz or MHz).

Backhaul The transport of telecommunications network traffic from the outer edge of the network back to the central core. A common example is wireless backhaul, which is the connection from a wireless base station or tower to the wireless network core.

CableCard A device that is provided by the cable service provider or embedded in a retail device (e.g., television monitor) that allows access to digital cable services and maintains signal security without having to use a cable provider's set-top-box.

CCAP Converged Cable Access Platform – Integration of the data and video portion of the cable architecture into one platform.

CODEC EnCOder-DECoder – converts between different types of video streams. A CODEC provides video in a known format, such as MPEG-2 or H.264.

Compression Reduction in the size of a video stream by computer processing, which takes advantage of symmetry and repetition in images and the stillness of a video picture over time. Widely available compression algorithms reduce the size of video by factors of tens or hundreds.

DOCSIS 3.X The latest version of a Data Over Cable Service Interface Specification telecommunication standard that enables the transmission of high-speed IP-based data and voice over the cable network and provides interoperability between devices of different manufacturers. Like Wi-Fi and Ethernet, DOCSIS made it possible to build less-expensive mass-produced devices.

Ethernet The name of the technology invented by the Xerox Corporation for a 10 Mbps shared resources LAN, subsequently incorporated into Institute of Electrical and Electronics Engineers standard

IEEE 802.3. Ethernet, like Wi-Fi, is a widely adopted standard that creates interoperability between different vendor devices and a widely adopted technical approach to networking. Almost all wired computer network interfaces are Ethernet, and Ethernet is now a typical interface on a digital television.

Headend A cable system operator's central cable TV facility, which receives satellite and off-air video feeds and inserts signals into the cable system. The headend also includes data and voice switching and administrative services.

HFC Hybrid Fiber Coax – A standard cable TV architecture in which the backbone network is fiber optic cable and the last-mile access network is coaxial cable. HFC is a scalable architecture, in which capacity can be increased by building fiber closer to users.

HDTV High-Definition Television – Video/images of higher resolution than standard definition (SD), resulting in enhanced picture quality. Common HDTV signal resolutions are 1920 x 1080 and 1280 x 720.

Hub Key facilities on a network that are served by the network backbone. Typically hubs are connected to each other and the headend over redundant fiber paths.

IP Internet Protocol – A set of networking standards and an addressing scheme which emerged with the Internet and is also frequently used in private networks.

MHz Megahertz – Unit of measuring frequency and bandwidth. One MHz is one million cycles per second. AM radio is between 0.54 and 1.6 MHz; FM radio is between 88 and 108 MHz; and over-the-air television frequencies range between 54 and 700 MHz.

Modem MOdulator-DEModulator, typically providing an interface between a cable (telephone, cable TV, or fiber optic) and data terminal equipment.

MPEG Motion Picture Experts Group – A video standard for full-motion entertainment quality television. Most cable television uses the MPEG-2 standard.

Node A component in a Hybrid Fiber Coaxial network that converts between optical and electrical signals and resides at the boundary between the fiber optic cable and coaxial cable. Since the capacity of fiber optics is much greater than coaxial cable, a cable system with optical service nodes serving fewer subscribers provides greater capacity for interactive services.

PEG Public, Educational, and Governmental programming. PEG channels, studios, and equipment are provided in cable franchise agreements. Public access is typically operated by a nonprofit entity or by the cable operator and is intended to provide members of the public with the ability to produce and broadcast television programs. Educational channels are operated by schools or higher education institutions. Government channels are operated by local governments and typically air public meetings and government information.

QAM Quadrature Amplitude Modulation – The presentation of data on a carrier signal in a cable or over the air by using different combinations of its phase and amplitude. QAM is the technique used on cable systems for digital video and cable modem services. It makes it possible for a cable system to carry six (64-QAM), eight (256-QAM), or 10 (1024-QAM) Mbps of data for each MHz of frequency used.

Spectral Efficiency A measure of the efficiency of data transmission over bandwidth (or spectrum), which determines the amount of useful information per unit of spectrum (devoid of error correction and other parameters aiding smooth transmission). It is usually measured in bps/Hz.