Before the
FEDERAL COMMUNICATIONS COMMISSION
Washington, D.C. 20554

In the Matter of	)	
	)	
Use of Spectrum Bands Above 24 GHz For Mobile Radio Services	)	GN Docket No. 14-177
	)	
Amendment of the Commission's Rules Regarding the 37.0-38.6 GHz and 38.6-40.0 GHz Bands	)	ET Docket No. 95-183 (Terminated)
	)	
Implementation of Section 309(j) of the Communications Act – Competitive Bidding, 37.0-38.6 GHz and 38.6-40.0 GHz Bands	)	PP Docket No. 93-253 (Terminated)
	)	
Petition for Rulemaking of the Fixed Wireless Communications Coalition to Create Service Rules for the 42-43.5 GHz Band	)	RM-11664

REPLY COMMENTS OF FIBERTOWER SPECTRUM HOLDINGS, LLC

Joseph Sandri
FiberTower Spectrum Holdings, LLC
1875 Eye Street, NW
Washington, DC 20016
jsandri@fibertower.com
(202) 223-1028

Tom W. Davidson
Douglas I. Brandon
Benjamin C. Bartlett
Akin Gump Strauss Hauer & Feld LLP
1333 New Hampshire Avenue, NW
Washington, DC 20036
(202) 887-4000
Counsel to FiberTower Spectrum Holdings, LLC

February 17, 2015

EXECUTIVE SUMMARY

FiberTower Spectrum Holdings, LLC ("FiberTower") appreciates the opportunity to submit reply comments in this important proceeding. Initial comments filed by industry stakeholders and other interested parties reflect broad support for the Commission's examination of the use of spectrum bands above 24 GHz for mobile radio services, while preserving and expanding existing fixed service deployments. The next-generation mobile and fixed service initiatives are collaborative and inextricably intertwined. For example, fixed service industry players have led the way in demonstrating that fixed service millimeter wave ("mmWave")[1] equipment can achieve broadband connectivity in both mobile and non-line-of-sight configurations. By taking steps to permit mobile uses of these bands, the Commission has the opportunity to drive the critical investment, research and development, and innovation necessary to fuel the creation of Fifth Generation ("5G") mobile services and meet the growing consumer demand for high-speed broadband.

Commenters agree with FiberTower that maintaining existing fixed wireless services – and providing existing and future wide-area mmWave licensees the ability to flexibly deploy fixed, portable, and mobile systems as market forces dictate (while observing border interference standards) – will be essential to enabling the successful development and deployment of advanced mobile solutions in the bands above 24 GHz. Furthermore, development of existing fixed wireless technologies will be integral to expanding high-speed broadband service to currently underserved areas. Accordingly, in addition to permitting mobile uses in bands above 24 GHz, it is essential to mobile development that the Commission adopt rules that protect, and encourage the further development of, existing fixed wireless technologies in these bands. By so doing, the Commission

[1] The bands at 24 GHz and above are referred to as mmWave for purposes of simplicity in FiberTower's initial comments and reply comments in this proceeding.

will facilitate greater access to high-speed broadband services across the country, and ensure the U.S. remains a global leader in the development of next-generation mobile services in 5G and small cell markets.

TABLE OF CONTENTS

Page

EXECUTIVE SUMMARY.....i

I. THE PATH FOR DEVELOPING AND DEPLOYING ADVANCED MOBILE SOLUTIONS IN THE BANDS ABOVE 24 GHZ REQUIRES ENCOURAGING FURTHER DEVELOPMENT OF EXISTING FIXED WIRELESS TECHNOLOGIES. 2

A. Commenters Agree That the Path for Developing and Deploying Advanced Mobile Solutions in the Bands Above 24 GHz Requires Encouraging Further Development of Existing Fixed Wireless Technologies. 4

B. Point-to-Multipoint (PMP) and Point-to-Point (PTP) Systems Share Essentially the Same Core Technology as the Emerging Advanced mmWave Mobile Systems. 5

II. THE NEED FOR WIDE-AREA LICENSED, FIXED WIRELESS BROADBAND IS ACUTE, EVEN IN NEW YORK CITY, LET ALONE IN OTHER URBAN AND RURAL U.S. MARKETS. 7

III. THE 24 GHZ AND 39 GHZ WIDE-AREA LICENSED BANDS ARE PROVEN TO HOLD THE PHYSICAL CAPACITY TO DELIVER MORE BITS PER CHANNEL PER LICENSE AREA COMPARED TO CHANNELS AT 700 MHz, 2.4 GHz, 3.5 GHz and 5.8 GHz 8

IV. BY ENSURING THAT BOTH MOBILE AND EXISTING FIXED WIRELESS SERVICES ARE ABLE TO THRIVE IN THE BANDS ABOVE 24 GHZ, THE COMMISSION CAN SOLIDIFY THE U.S. AS A GLOBAL LEADER IN THE DEVELOPMENT OF NEXT-GENERATION SOLUTIONS. 11

V. CONCLUSION. 12

Before the
FEDERAL COMMUNICATIONS COMMISSION
Washington, D.C. 20554

In the Matter of	)	
	)	
Use of Spectrum Bands Above 24 GHz For Mobile Radio Services	)	GN Docket No. 14-177
	)	
Amendment of the Commission's Rules Regarding the 37.0-38.6 GHz and 38.6-40.0 GHz Bands	)	ET Docket No. 95-183 (Terminated)
	)	
Implementation of Section 309(j) of the Communications Act – Competitive Bidding, 37.0-38.6 GHz and 38.6-40.0 GHz Bands	)	PP Docket No. 93-253 (Terminated)
	)	
Petition for Rulemaking of the Fixed Wireless Communications Coalition to Create Service Rules for the 42-43.5 GHz Band	)	RM-11664

REPLY COMMENTS OF FIBERTOWER SPECTRUM HOLDINGS, LLC

FiberTower Spectrum Holdings, LLC ("FiberTower") hereby submits reply comments in response to the Notice of Inquiry ("NOI") of the Federal Communications Commission (the "Commission") in the above-captioned proceeding.[2] Initial comments filed by industry stakeholders and other interested parties in this proceeding reflect broad support for the Commission's examination of the use of spectrum bands above 24 GHz for mobile radio services.[3] By taking

[2] *See Use of Spectrum Bands Above 24 GHz for Mobile Radio Services, et al.,* GN Docket No. 14-177, *et al.*, Notice of Inquiry, 29 FCC Rcd 13020 (2014); *see also* Comments of FiberTower Spectrum Holdings, LLC, GN Docket No. 14-177 (filed Jan. 15, 2015) ("FiberTower Comments").

[3] *See, e.g,* FiberTower Comments at 1; Comments of the Consumer Electronics Association, GN Docket No. 14-177, at 9 (filed Jan. 15, 2015) ("… CEA applauds the FCC for issuing the NOI as a forum for developing a complete record on the current and potential future uses of the mmW bands and the technical and regulatory issues raised by those various uses.") ("CEA Comments"); Comments of Alcatel-Lucent, GN Docket No. 14-177, at 12 (filed Jan 15, 2015) ("Alcatel-Lucent applauds the Commission's efforts to explore spectrum bands above 24 GHz… .") ("Alcatel-Lucent Comments"); Comments of Fixed Wireless Communications Coalition, GN Docket No. 14-177, at

steps to permit mobile uses of these bands, the Commission has the opportunity to drive the critical investment, research and development, and innovation necessary to fuel the creation of Fifth Generation ("5G") mobile services and meet the growing consumer demand for high-speed broadband.

As discussed below, commenters agree with FiberTower that existing fixed wireless services in the bands above 24 GHz will be essential to enabling the successful development and deployment of advanced mobile solutions. Furthermore, continued development of existing fixed wireless technologies in these bands is integral to expanding high-speed, wireless broadband service to consumers in areas that are presently underserved by fiber. Accordingly, in addition to permitting mobile uses in bands above 24 GHz, it is essential that the Commission maintain, and encourage the further development of, existing fixed wireless technologies in these bands.

I. THE PATH FOR DEVELOPING AND DEPLOYING ADVANCED MOBILE SOLUTIONS IN THE BANDS ABOVE 24 GHZ REQUIRES ENCOURAGING FURTHER DEVELOPMENT OF EXISTING FIXED WIRELESS TECHNOLOGIES.

Protecting and encouraging further innovative development of existing fixed wireless technologies in the bands above 24 GHz is necessary to facilitate the successful development and deployment of 5G mobile services.[4] Fixed services in these bands, especially multiple point-to-point

---

2 (filed Jan. 15, 2015) ("FWCC Comments"); Comments of CTIA – The Wireless Association, GN Docket No. 14-177, at 2 (filed Jan. 15, 2015).

[4] Through substantial investments, FiberTower has taken significant steps to develop and deploy the network infrastructure and equipment necessary to enable innovative uses of the wide-area licensed 24 and 39 GHz bands, and to support the deployment of next-generation wireless solutions. FiberTower has continued its work as an industry leader dedicated to driving innovation, research and development, and real-world product launches in the bands above 24 GHz. The company's work has included building out the then largest fixed wireless backhaul network in the country, working with vendors to develop viable wireless backhaul equipment for these bands, and partnering with vendors to offer customers ready-to-deploy "spectrum-in-a-box" systems. Certain FiberTower efforts were set back by the determination of the Wireless Telecommunications Bureau in 2012 that FiberTower had failed to adequately demonstrate substantial service for some of its licenses in the 24 and 39 GHz bands. FiberTower subsequently filed an application for review of the Bureau's

("PTP") and point-to-multipoint ("PMP"), are recognized by leading engineers as the precursor technologies to advanced mobile deployments. Additionally, further development of existing fixed wireless services is critical to overcoming bottlenecks in broadband connectivity that prevent consumers and businesses in both rural and urban markets across the country from receiving adequate high-speed broadband.

The path to ensuring U.S. leadership in developing millimeter wave ("mmWave") advanced mobile broadband requires providing continuing encouragement to the licensees of the wide-area licensed bands. These licensees must be encouraged, in particular, to persist in developing PTP, PMP, portable and advanced mobile solutions on their existing licenses. Accordingly, disrupting existing fixed wireless networks and their equipment development, and network growth plans, would have a significant, detrimental impact on (i) the development of 5G services and the expansion of high-speed broadband service to underserved areas nationwide, and (ii) U.S. global 5G leadership. By ensuring that both mobile and existing fixed wireless services are able to thrive in the bands above 24 GHz, the Commission has the opportunity to solidify the position of the U.S. as a global leader in the development of next-generation spectrum solutions.

---

decision. FiberTower's application for review, as well as its subsequent petition for reconsideration, was denied by the Commission. Currently, FiberTower has an appeal pending before the United States Court of Appeals for the District of Columbia. In the event FiberTower's appeal is successful and those previously cancelled licenses are ultimately reinstated, FiberTower is prepared to quickly invest in these licenses in order to advance the Commission's goals in the NOI of driving innovation and accelerating the development and deployment of next-generation mobile services in the bands above 24 GHz. *See* FiberTower Comments at 3-7.

A. Commenters Agree That the Path for Developing and Deploying Advanced Mobile Solutions in the Bands Above 24 GHz Requires Encouraging Further Development of Existing Fixed Wireless Technologies.

Commenters agree with FiberTower that the successful development and deployment of advanced mobile solutions in bands above 24 GHz will require maintaining and further developing existing fixed wireless technologies in these bands.[5] For example, Alcatel-Lucent emphasizes:

> While the new capabilities available with 5G mobile services have great potential, the Commission must ensure that technologies that enable these capabilities, such as fixed wireless, also receive appropriate attention. The primary use of microwave links currently is for mobile infrastructure backhauling. Wireless backhauling will be even more strongly associated in 5G. … [S]mall cells are expected to be widely deployed to support 5G. These small cells will all require backhaul, and a significant percentage will require high-quality licensed fixed services connections, possibly in the 24 GHz and above frequency range. As we look to provide needed spectrum to support new mobile services, we must also ensure that the underpinnings on which these services are built are protected.[6]

The Fixed Wireless Communications Coalition further explains that "[t]here is one certainty at the outset: demand for mobile data will continue to expand. A corollary to that certainty is that wireless backhaul capacity must keep pace. … The implementation of '5G' services and the growing use of small cell technologies for data delivery will only further demand for Fixed Service wireless backhaul solutions."[7] Additionally, Qualcomm Incorporated emphasizes that a number of the mmWave bands "already support point-to-point microwave links. 5G operations in these bands may be able to seamlessly integrate and dynamically share spectral resources in a single band between mobile access links and backhaul links."[8] Other commenters similarly agree that existing

---

[5] *See* FiberTower Comments at 14; *see also, e.g.,* Alcatel-Lucent Comments at 11; FWCC Comments at 2.

[6] Alcatel-Lucent Comments at 11.

[7] FWCC Comments at 2.

[8] *See* Comments of Qualcomm Incorporated, GN Docket No. 14-177, at 14 (filed Jan. 15, 2015). Although Qualcomm mentions the possibility of clearing certain incumbents from the bands above 24 GHz to make room for mobile use, it should be noted that almost all other commenters find that

fixed wireless services in these bands should be protected.[9]

B. Point-to-Multipoint (PMP) and Point-to-Point (PTP) Systems Share Essentially the Same Core Technology as the Emerging Advanced mmWave Mobile Systems.

Maintaining and further developing existing fixed wireless services in the bands above 24 GHz will support and accelerate the eventual deployment of 5G mobile services because existing PMP and PTP systems in these bands share essentially the same core technology that will be utilized by emerging advanced mobile systems in the mmWave spectrum.[10] In the NOI, the Commission rightly asks about which characteristics of the anticipated mobile technologies are relevant to the choices of frequency bands above 24 GHz.[11] Such characteristics include bandwidth requirements, propagation metrics, , interference standards, availability of electronic components, antenna designs and deployment costs. These questions are directly relevant to the reality that the current mmWave PMP technology provides a blueprint for many of the future components and designs necessary to deploy advanced mobile services. In fact, as noted in FiberTower's initial comments, laboratory

---

such a move would not make sense. *See id.* at 7-8; *see generally,* Comments of Vivint Wireless, Inc., GN Docket No. 14-177 (filed Jan. 15, 2015) ("Vivint Comments); Alcatel-Lucent Comments; Comments of Straight Path Communications, GN Docket No. 14-177 (filed Jan. 15, 2015) ("Straight Path Comments"), Comments of T-Mobile USA, Inc., GN Docket No. 14-177 (filed Jan. 15, 2015); FWCC Comments. Clearing the bands above 24 GHz that host incumbent fixed wireless services would not make sense because existing wide-area licensees who are actively deploying small cell backhaul and other innovative solutions are providing precisely the building blocks upon which 5G access and backhaul will depend.

[9] *See, e.g.,* CEA Comments at 9 ("…[T]he FCC should provide adequate protection to incumbents that are already utilizing the mmW bands, as well as to promote their expansion of services, while facilitating the widest possible range of future uses."); Straight Path Comments at 23 ("Moreover, authorizing mmW incumbents to provide mobile operations would ensure that their fixed operations are protected."); Comments of Nokia, GN Docket No. 14-177, at 31 (filed Jan. 15, 2015) ("We further support protecting incumbent operations and considering them as part of any potential service rules.") ("Nokia Comments"); Vivint Comments at 3.

[10] *See generally*, IEEE IMS (June 2014, Tampa, FL).

[11] *See* NOI, ¶ 17.

study results show that mobility is indeed possible today using existing PMP 24 GHz technology, let alone custom-designed mmWave mobile equipment.[12]

Furthermore, the NOI seeks comment on whether mobile handset use in the bands above 24 GHz can overcome non-line-of-sight ("NLOS") limitations.[13] The answer is yes, bands above 24 GHz do support mobile and NLOS connections.[14] With that said, the lower bands will be better utilized for NLOS connectivity in many situations, and the mmWave bands will be better utilized for high-capacity LOS connectivity in many situations. Especially once handsets deploy both low-band and mmWave band antenna configurations, NLOS concerns will be largely overcome. Of course, it is highly recommended that the existing mmWave technology be refined specifically for practical mobile use.

Additionally, the small cell and fixed wireless backhaul sites necessary to support current 4G growth are in the same locations that will be the springboards for deploying 5G base stations and associated backhaul services.[15] As noted by Alcatel-Lucent, the primary use of microwave links is currently for mobile infrastructure backhaul.[16] Such backhaul will be even more important for 5G, and the licensed bands above 24 GHz appear situated to play an increasingly important role.[17] Small cell backhaul for 4G systems will bring anywhere from 10Mbps to +100Mbps to a pole or other small cell location, and that location also will feature the retail-side 4G mobile small cell base station

---

[12] *See* FiberTower Comments at 8-14.

[13] *See* NOI, ¶ 24.

[14] *See* FiberTower Comments at 8-14.

[15] *See id.*

[16] *See* Alcatel-Lucent Comments at 11.

[17] *See id.*

or repeater.[18] The form factor, location, and power-supply needs for those 4G small cell systems will generally replicate the form factor, location, and power-supply needs of 5G small cell systems.[19] In other words, the growing mmWave 4G infrastructure is a key transitional component for future 5G deployments. Fixed service mmWave 4G deployment and development are inherently embedded in, and directly support, fixed and mobile 5G development. Thus, it is critical that the Commission adopt a regulatory framework that both maintains and encourages the further development of existing fixed wireless services in these bands in order to facilitate and accelerate the efficient development and deployment of 5G services.

II. THE NEED FOR WIDE-AREA LICENSED, FIXED WIRELESS BROADBAND IS ACUTE, EVEN IN NEW YORK CITY, LET ALONE IN OTHER URBAN AND RURAL U.S. MARKETS.

The consumer need for fixed wireless broadband service is acute in both urban and rural areas – even in highly populated urban areas. For example, according to a recent report, as many as 90% of the approximately 13,000 commercial buildings in New York City are underserved by high-speed broadband due to the high cost of running fiber to the buildings.[20] This bottleneck problem, however, is not confined to New York City, and the problem can be exacerbated in other urban or rural areas that have fewer economic resources than a highly populated urban area.[21]

---

[18] *See* http://nsma.org/docs/conferences/2014/NSMA-2014-Small-Cell-NLOS-Joe-Sandri.pdf.

[19] *See id.*

[20] *See* "Building Better Wireless," Crain's New York Business (Nov. 3, 2014), *available at:* http://www.crainsnewyork.com/article/20141102/TECHNOLOGY/141039948/building-better-wireless.

[21] For example, more than 80% of educators say their Internet connections fail to meet their teaching needs. *See* ConnectED: President Obama's Plan for Connecting All Schools to the Digital Age, *available at:* http://www.whitehouse.gov/sites/default/ files/docs/connected_fact_sheet.pdf. Moreover, over 64 million Americans are without internet access, and over 50% of libraries say their Internet connections fail to meet their patrons' needs. *See* www.mobilebeacon.org. FiberTower customers have validated that this dynamic of underserved commercial and community buildings is wide-spread in other U.S. cities.

To overcome this connectivity bottleneck, businesses are focusing on deployment of fixed wireless services to provide high-speed connectivity to underserved buildings and consumers.[22] Through its investment, research and development, and real-world product launches, FiberTower supplies the spectrum, equipment, and technology necessary to remedy exactly these types of issues through utilization of wide-area licensed, fixed wireless services in the 24 and 39 GHz bands.[23]

III. THE 24 GHZ AND 39 GHZ WIDE-AREA LICENSED BANDS ARE PROVEN TO HOLD THE PHYSICAL CAPACITY TO DELIVER MORE BITS PER CHANNEL PER LICENSE AREA COMPARED TO CHANNELS AT 700 MHz, 2.4 GHz, 3.5 GHz and 5.8 GHz

In its initial comments, FiberTower provided data from a recent Comsearch study illustrating that the 24 and 39 GHz bands utilized by FiberTower contain physical characteristics for providing more efficient, higher-capacity spectrum use compared to lower bands such as the 700 MHz, 2.4 GHz, 3.5 GHz, and 5.8 GHz.[24] By using wide-area licensed bands above 24 GHz to deliver ultra-high capacity mobile connections to hundreds of links for mobile customers in a small area using the same channel, significant relief can be given to mobile operations in, for example, the 700 MHz, 800 MHz, 900 MHz and AWS-3 bands.

The NOI generally asks for data on multiband mobile architectures and on "simplicity versus efficiency" tradeoffs in such architectures.[25] It already has been proven that mobile and NLOS deployments are possible in the bands above 24 GHz and that they can provide connections

---

[22] *See* footnote 20, *supra*.

[23] *See* FiberTower Comments at 3-7 (explaining the significant steps taken by FiberTower to develop and deploy the network infrastructure and equipment necessary to enable innovative uses of the 24 and 39 GHz bands).

[24] *See* FiberTower Comments at 24, Exhibit B.

[25] *See* NOI, ¶¶ 26, 32.

ranging from 10 Mbps to +1Gbps.[26] Moreover, the Comsearch study demonstrated that antennas operating in the 24 and 39 GHz bands are more directional than lower bands, making it possible to utilize a channel repeatedly within the same geographic area. **Figure 1** below reflects additional data from the Comsearch study, comparing antenna patterns by band.

Figure 1

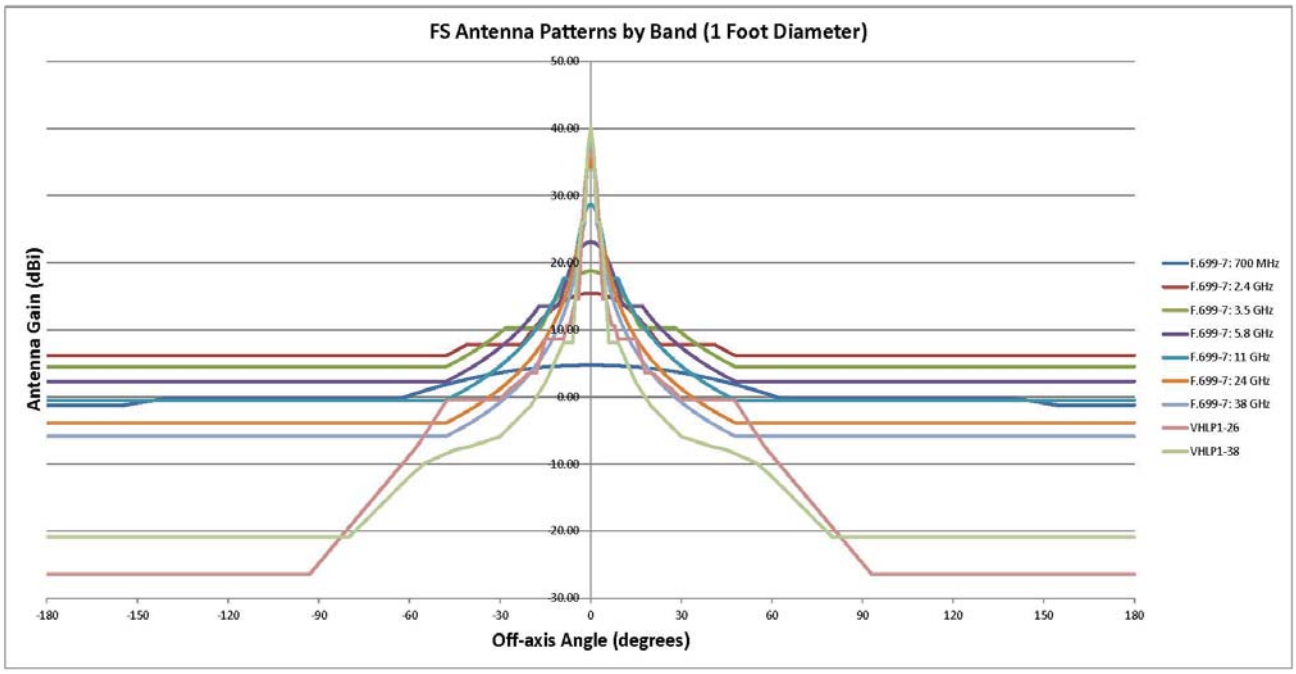

For example, the larger the antenna, the more directionality can be achieved in shaping the signal.[27] As demonstrated by **Figure 1**, even using a one-foot antenna at 700 MHz, the operational beamwidth is 97.4 degrees.[28] At 24-26 GHz, the operational beamwidth is an exponentially tighter

[26] *See* FiberTower Comments at 8-14.

[27] A standard method for calculating the directionality of an antenna is to see at what angle the gain is reduced 3 db from the main beam value.

[28] Using a one-foot antenna for this study is for illustrative purposes. Of course, a handset would possess an antenna much smaller than one foot. Attachments 1 and 2 hereto provide relevant antenna configuration specifications.

2.5 degrees. At 38 GHz, the operational beamwidth is 1.6 degrees. As illustrated in **Figure 2** below, the ability to reuse the channel increases as the operational beamwidth becomes tighter.

Figure 2: Beamwidth and Channel Reuse Analysis Using Data from Figure 1

	700 MHz	**24-26 GHz**	**38 GHz**
Beamwidth	97.4º	2.5º	1.6º
Channel Reuse: [The maximum times the same channel (with shielded sectors) could theoretically be reused in the same 360º from the same location.]	Less than 4	144	225

Beyond the accurate and tight beamwidths in mmWave spectrum, transmissions in the 24 and 39 GHz bands further lend themselves to extensive reuse because they are easier to control as they do not propagate as extensively as similarly powered spectrum transmissions in lower bands. In other words, if a transmission over a typical 700 MHz channel "burns through" a variety of structures and also spreads for multiple miles, then it is more difficult to reuse that same channel in the area already covered (*i.e.*, "polluted") by the initial transmission. Alternatively, a transmission over a 24 GHz channel, using the same amount of power, will not burn through buildings or cover nearly the same amount of geographic area. Yet, that channel can be repurposed again and again in the same area.[29] This dynamic therefore allows for many more bits per hertz per area to be transmitted over the same channel in the same area. Additionally, channels in the 24 and 39 GHz bands are typically wider and can typically carry more bits per channel than thinner channels in lower bands.

[29] It has long been known that the bands above 24 GHz possess superior channel reuse characteristics. *See, e.g.*, ITU-R F.1498-1, *Deployment Characteristics of fixed service systems in the band 37-40 GHz for use in sharing studies* (5/2002), a copy of which is attached at Attachment 3 hereto. *See also* NOI, ¶¶ 17, 26 and 32.

IV. BY ENSURING THAT BOTH MOBILE AND EXISTING FIXED WIRELESS SERVICES ARE ABLE TO THRIVE IN THE BANDS ABOVE 24 GHZ, THE COMMISSION CAN SOLIDIFY THE U.S. AS A GLOBAL LEADER IN THE DEVELOPMENT OF NEXT-GENERATION SOLUTIONS.

At a time when other countries are competing vigorously with the U.S. in terms of mobile and fixed broadband deployment, speeds and innovation,[30] this proceeding presents the U.S. with a key opportunity to take the global lead in the development of cutting-edge, next generation spectrum solutions rather than falling any further behind. As Nokia explains, "The United States has been an early adopter in each generation of wireless technology, a major driver of innovation, and remains among the most vibrant wireless markets in the world. … The U.S. can be a driving force in 5G. Indeed, 5G will be a key technology for many growing U.S. business sectors . . . . Significant early investment in 5G would help close the gap in ultrafast mobile broadband between the U.S. and other countries."[31] Nokia also has warned that the U.S. is behind in this critical, developing market.[32]

The Commission should use this proceeding to signal to existing wide-area licensees in bands above 24 GHz that it will vigorously encourage investment in mmWave innovation. Clearly and concisely acknowledging that message will embolden licensees, manufacturers and customers, and motivate service providers to expand, modernize, and transform their services.

In contrast, disrupting existing fixed wireless networks and their growth plans would hinder, rather than accelerate, the development and deployment of 5G mobile technologies by disrupting the essential underlying infrastructure and human capital that will be needed to support next-

---

[30] *See, e.g., International Comparison Requirements Pursuant to the Broadband Data Improvement Act*, GN Docket No. 14-126, Fourth Report, DA 15-132 (rel. Feb. 4, 2015).

[31] Nokia Comments at 3.

[32] *See* Letter from Brian Hendricks, Nokia, to Marlene H. Dortch, Secretary, FCC, Docket Nos. 14-28, 12-354, 14-177, 12-268, Notice of Ex Parte (filed Dec. 12, 2014). A relevant excerpt of this ex parte is provided at Attachment 4 hereto.

generation mobile services. As stakeholders have emphasized, fixed wireless services, including backhauling, will be critical for supporting the deployment of 5G small cell technologies.[33] Disrupting fixed wireless infrastructure in the bands above 24 GHz would slow 5G development and discourage investment in further innovation in these bands, thereby undermining the global competitiveness of the U.S. Instead, the Commission should seize the opportunity to establish the U.S. as a global leader in the development of 5G services by ensuring that both mobile and existing fixed wireless services are able to thrive in the bands above 24 GHz, provided that border interference standards are satisfied. Doing so will encourage the investment, research and development, and technological innovation that is needed to accelerate the deployment of 5G services and further develop innovative fixed wireless technologies in these bands. This, in turn, will bolster U.S. global competitiveness, benefit the U.S. economy, and serve the public interest by expanding high-speed broadband deployment to meet growing consumer demand.

V. CONCLUSION.

Industry stakeholders broadly support the Commission's examination of the use of spectrum bands above 24 GHz for mobile radio services, while preserving and expanding existing fixed service deployments. The next-generation mobile and fixed service initiatives are collaborative and inextricably intertwined. For example, fixed service industry players have led the way in demonstrating that fixed service mmWave equipment can achieve broadband connectivity in both mobile and non-line-of-sight configurations. By taking steps to permit mobile uses of these bands, the Commission has the opportunity to drive the critical investment, research and development, and innovation necessary to fuel the creation of 5G mobile services and meet growing consumer

[33] *See, e.g.,* Alcatel-Lucent Comments at 11; FWCC Comments at 2; *see also* "Developments in Small Cells and Non-Line-of-Sight (NOLS)," National Spectrum Managers Association, at 24-25, 47, 54-72 (May 13, 2014), *available at:* http://www.nsma.org/docs/conferences/2014/NSMA-2014-Small-Cell-NLOS-Joe-Sandri.pdf; *see also* "Samsung Says New Superfast 5G Works With Handsets in Motion," MIT Technology Review (June 13, 2013).

demand for high-speed broadband. Maintaining existing fixed wireless services and providing existing and future wide-area mmWave licensees the ability to flexibly deploy fixed, portable, and mobile systems as market forces dictate (while observing border interference standards), will be essential to enabling the successful development and deployment of advanced mobile solutions in the bands above 24 GHz. Development of existing fixed wireless technologies also will be integral to expanding high-speed broadband service to currently underserved areas. Millimeter wave 4G fixed, small cell backhaul networks will serve as infrastructure sites for future 5G mmWave access and backhaul systems. Accordingly, in addition to permitting mobile uses in bands above 24 GHz, it is essential that the Commission adopt rules that protect, and encourage the further development of, existing fixed wireless technologies in these bands. By so doing, the Commission will facilitated greater access to high-speed broadband services across the country, and ensure the U.S. remains a global leader in the development of next-generation mobile services in 5G and small cell markets.

Respectfully submitted,

/s/
Joseph Sandri
FiberTower Spectrum Holdings, LLC
1875 Eye Street, NW
Washington, DC 20016
jsandri@fibertower.com
(202) 223-1028

/s/
Tom W. Davidson
Douglas I. Brandon
Benjamin C. Bartlett
Akin Gump Strauss Hauer & Feld LLP
1333 New Hampshire Avenue, NW
Washington, DC 20036
(202) 887-4000
Counsel to FiberTower Spectrum Holdings, LLC

February 17, 2015

ATTACHMENT 1

Product Specifications

VHLP1-26-1GR

0.3 m | 1 ft ValuLine® High Performance Low Profile Antenna, single-polarized, 24.250–26.500 GHz, UG-595, gray antenna, polymer gray radome without flash, standard pack—one-piece reflector

General Specifications

Antenna Type	VHLP - ValuLine® High Performance Low Profile Antenna, single-polarized
Diameter, nominal	0.3 m | 1 ft
Packing	Standard pack
Radome Color	Gray
Radome Material	Polymer
Reflector Construction	One-piece reflector
Antenna Input	UG-595
Antenna Color	Gray
Antenna Type	VHLP - ValuLine® High Performance Low Profile Antenna, single-polarized
Diameter, nominal	0.3 m | 1 ft
Flash Included	No
Polarization	Single

Electrical Specifications

Operating Frequency Band	24.250 – 26.500 GHz
Beamwidth, Horizontal	2.5 °
Beamwidth, Vertical	2.5 °
Cross Polarization Discrimination (XPD)	30 dB
Electrical Compliance	Brazil Anatel Class 2 | ETSI 302 217 Class 3
Front-to-Back Ratio	63 dB
Gain, Low Band	36.2 dBi
Gain, Mid Band	36.6 dBi
Gain, Top Band	37.1 dBi
Operating Frequency Band	24.250 – 26.500 GHz
Radiation Pattern Envelope Reference (RPE)	7018A
Return Loss	17.7 dB
VSWR	1.30

Mechanical Specifications

Fine Azimuth Adjustment	±15°
Fine Elevation Adjustment	±15°
Mounting Pipe Diameter	50 mm–115 mm | 2.0 in–4.5 in
Net Weight	7 kg | 14 lb
Side Struts, Included	0
Side Struts, Optional	0
Wind Velocity Operational	200 km/h | 124 mph

©2015 CommScope, Inc. All rights reserved. All trademarks identified by ® or ™ are registered trademarks, respectively, of CommScope.
All specifications are subject to change without notice. See www.commscope.com for the most current information. Revised: June 11, 2014

VHLP1-26-1GR

Wind Velocity Survival Rating	250 km/h | 155 mph

Wind Forces At Wind Velocity Survival Rating

Axial Force (FA)	445 N | 100 lbf
Side Force (FS)	221 N | 50 lbf
Twisting Moment (MT)	166 N•m
Weight with 1/2 in (12 mm) Radial Ice	13 kg | 28 lb
Zcg with 1/2 in (12 mm) Radial Ice	50 mm | 2 in
Zcg without Ice	25 mm | 1 in

©2015 CommScope, Inc. All rights reserved. All trademarks identified by ® or ™ are registered trademarks, respectively, of CommScope.
All specifications are subject to change without notice. See www.commscope.com for the most current information. Revised: June 11, 2014

VHLP1-26-1GR

Wind Forces At Wind Velocity Survival Rating Image

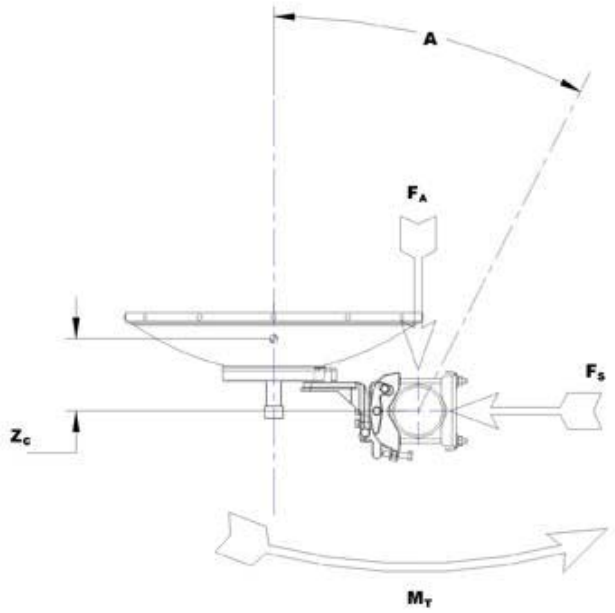

Packed Dimensions

Gross Weight, Packed Antenna	8.2 kg | 18.1 lb
Height	325.0 mm | 12.8 in
Length	640.0 mm | 25.2 in
Volume	0.1 m³
Width	460.0 mm | 18.1 in

©2015 CommScope, Inc. All rights reserved. All trademarks identified by ® or ™ are registered trademarks, respectively, of CommScope.
All specifications are subject to change without notice. See www.commscope.com for the most current information. Revised: June 11, 2014

Antenna Dimensions And Mounting Information

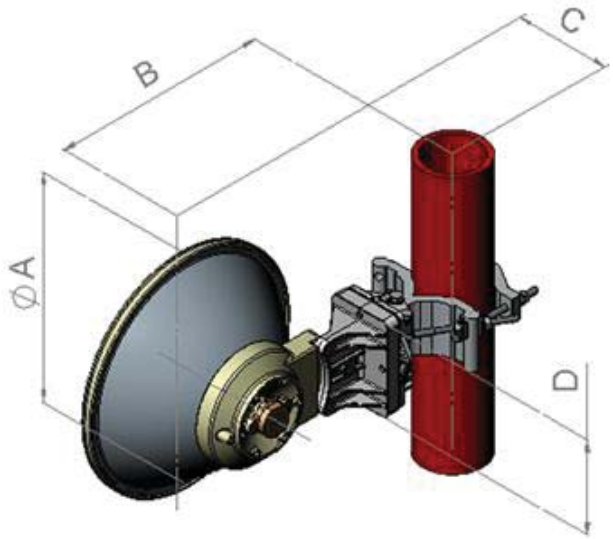

Dimensions in inches (mm)				
Antenna size, ft (m)	ØA	B	C	D
1 (0.3)	15.3 (388)	147 (372)	6.5 (166)	6.3 (160)

Regulatory Compliance/Certifications

Agency	Classification
ISO 9001:2008	Designed, manufactured and/or distributed under this quality management system

Included Products

VHLP1-26 (Product Component—not orderable) — 0.3 m | 1 ft ValuLine® High Performance Low Profile Antenna, single-polarized, 24.250–26.500 GHz

* Footnotes

Axial Force (FA)	Maximum forces exerted on a supporting structure as a result of wind from the most critical direction for this parameter. The individual maximums specified may not occur simultaneously. All forces are referenced to the mounting pipe.
Cross Polarization Discrimination (XPD)	The difference between the peak of the co-polarized main beam and the maximum cross-polarized signal over an angle twice the 3 dB beamwidth of the co-polarized main beam.
Front-to-Back Ratio	Denotes highest radiation relative to the main beam, at 180° ±40°, across the band. Production antennas do not exceed rated values by more than 2 dB unless stated otherwise.
Gain, Mid Band	For a given frequency band, gain is primarily a function of antenna size. The gain of Andrew antennas is determined by either gain by comparison or by computer integration of the measured antenna patterns.

©2015 CommScope, Inc. All rights reserved. All trademarks identified by ® or ™ are registered trademarks, respectively, of CommScope.
All specifications are subject to change without notice. See www.commscope.com for the most current information. Revised: June 11, 2014

VHLP1-26-1GR

Operating Frequency Band	Bands correspond with CCIR recommendations or common allocations used throughout the world. Other ranges can be accommodated on special order.
Packing	Andrew standard packing is suitable for export. Antennas are shipped as standard in totally recyclable cardboard or wire-bound crates (dependent on product). For your convenience, Andrew offers heavy duty export packing options.
Radiation Pattern Envelope Reference (RPE)	Radiation patterns determine an antenna's ability to discriminate against unwanted signals under conditions of radio congestion. Radiation patterns are dependent on antenna series, size, and frequency.
Return Loss	The figure that indicates the proportion of radio waves incident upon the antenna that are rejected as a ratio of those that are accepted.
Side Force (FS)	Maximum side force exerted on the mounting pipe as a result of wind from the most critical direction for this parameter. The individual maximums specified may not occur simultaneously. All forces are referenced to the mounting pipe.
Twisting Moment (MT)	Maximum forces exerted on a supporting structure as a result of wind from the most critical direction for this parameter. The individual maximums specified may not occur simultaneously. All forces are referenced to the mounting pipe.
VSWR	Maximum; is the guaranteed Peak Voltage-Standing-Wave-Ratio within the operating band.
Wind Velocity Operational	The wind speed where the antenna deflection is equal to or less than 0.1 degrees. In the case of ValuLine antennas, it is defined as a maximum deflection of 0.3 x the 3 dB beam width of the antenna.
Wind Velocity Survival Rating	The maximum wind speed the antenna, including mounts and radomes, where applicable, will withstand without permanent deformation. Realignment may be required. This wind speed is applicable to antenna with the specified amount of radial ice.

©2015 CommScope, Inc. All rights reserved. All trademarks identified by ® or ™ are registered trademarks, respectively, of CommScope.
All specifications are subject to change without notice. See www.commscope.com for the most current information. Revised: June 11, 2014

ATTACHMENT 2

Product Specifications

VHLP1-38-1GR

0.3 m | 1 ft ValuLine® High Performance Low Profile Antenna, single-polarized, 37.000–40.000 GHz, UG-599, gray antenna, polymer gray radome without flash, standard pack—one-piece reflector

General Specifications

Antenna Type	VHLP - ValuLine® High Performance Low Profile Antenna, single-polarized
Diameter, nominal	0.3 m | 1 ft
Packing	Standard pack
Radome Color	Gray
Radome Material	Polymer
Reflector Construction	One-piece reflector
Antenna Input	UG-599
Antenna Color	Gray
Antenna Type	VHLP - ValuLine® High Performance Low Profile Antenna, single-polarized
Diameter, nominal	0.3 m | 1 ft
Flash Included	No
Polarization	Single

Electrical Specifications

Operating Frequency Band	37.000 – 40.000 GHz
Beamwidth, Horizontal	1.6 °
Beamwidth, Vertical	1.6 °
Cross Polarization Discrimination (XPD)	30 dB
Electrical Compliance	Brazil Anatel Class 2 | Canada SRSP 338.6 Part A | ETSI 302 2172 Class 3B | US FCC Part 101A
Front-to-Back Ratio	61 dB
Gain, Low Band	39.6 dBi
Gain, Mid Band	40.1 dBi
Gain, Top Band	40.5 dBi
Operating Frequency Band	37.000 – 40.000 GHz
Radiation Pattern Envelope Reference (RPE)	7030
Return Loss	17.7 dB
VSWR	1.30

Mechanical Specifications

Fine Azimuth Adjustment	±15°
Fine Elevation Adjustment	±15°
Mounting Pipe Diameter	50 mm–115 mm | 2.0 in–4.5 in
Net Weight	7 kg | 14 lb
Side Struts, Included	0
Side Struts, Optional	0
Wind Velocity Operational	200 km/h | 124 mph

©2015 CommScope, Inc. All rights reserved. All trademarks identified by ® or ™ are registered trademarks, respectively, of CommScope.
All specifications are subject to change without notice. See www.commscope.com for the most current information. Revised: June 11, 2014

VHLP1-38-1GR

Wind Velocity Survival Rating	250 km/h | 155 mph

Wind Forces At Wind Velocity Survival Rating

Axial Force (FA)	445 N | 100 lbf
Side Force (FS)	221 N | 50 lbf
Twisting Moment (MT)	166 N•m
Weight with 1/2 in (12 mm) Radial Ice	13 kg | 28 lb
Zcg with 1/2 in (12 mm) Radial Ice	50 mm | 2 in
Zcg without Ice	25 mm | 1 in

©2015 CommScope, Inc. All rights reserved. All trademarks identified by ® or ™ are registered trademarks, respectively, of CommScope.
All specifications are subject to change without notice. See www.commscope.com for the most current information. Revised: June 11, 2014

VHLP1-38-1GR

Wind Forces At Wind Velocity Survival Rating Image

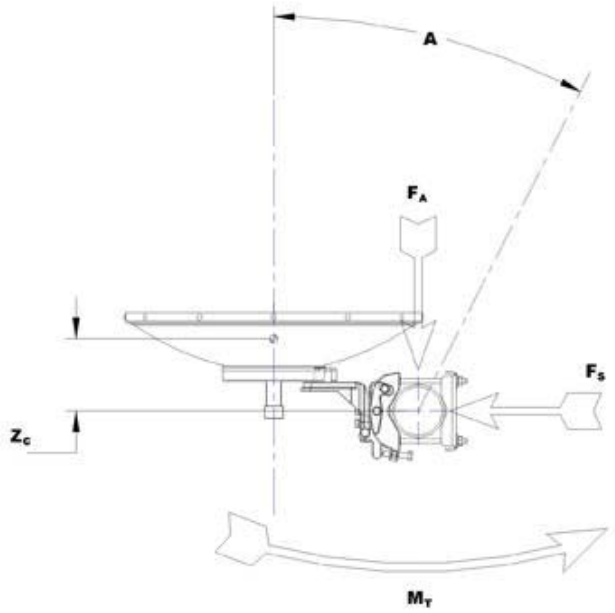

Packed Dimensions

Gross Weight, Packed Antenna	8.2 kg | 18.1 lb
Height	325.0 mm | 12.8 in
Length	640.0 mm | 25.2 in
Volume	0.1 m³
Width	460.0 mm | 18.1 in

©2015 CommScope, Inc. All rights reserved. All trademarks identified by ® or ™ are registered trademarks, respectively, of CommScope.
All specifications are subject to change without notice. See www.commscope.com for the most current information. Revised: June 11, 2014

Antenna Dimensions And Mounting Information

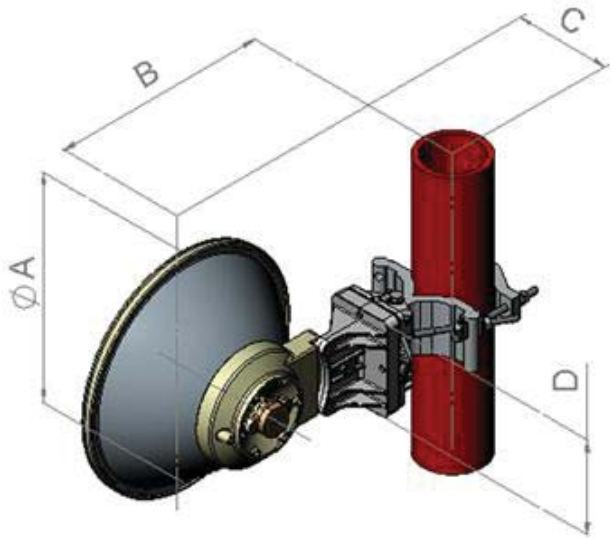

Dimensions in inches (mm)				
Antenna size, ft (m)	ØA	B	C	D
1 (0.3)	15.3 (388)	14.7 (372)	6.5 (166)	6.3 (160)

Regulatory Compliance/Certifications

Agency	Classification
ISO 9001:2008	Designed, manufactured and/or distributed under this quality management system

Included Products

VHLP1-38 (Product Component—not orderable) — 0.3 m | 1 ft ValuLine® High Performance Low Profile Antenna, single-polarized, 37.000–40.000 GHz

* Footnotes

Axial Force (FA)	Maximum forces exerted on a supporting structure as a result of wind from the most critical direction for this parameter. The individual maximums specified may not occur simultaneously. All forces are referenced to the mounting pipe.
Cross Polarization Discrimination (XPD)	The difference between the peak of the co-polarized main beam and the maximum cross-polarized signal over an angle twice the 3 dB beamwidth of the co-polarized main beam.
Front-to-Back Ratio	Denotes highest radiation relative to the main beam, at 180° ±40°, across the band. Production antennas do not exceed rated values by more than 2 dB unless stated otherwise.
Gain, Mid Band	For a given frequency band, gain is primarily a function of antenna size. The gain of Andrew antennas is determined by either gain by comparison or by computer integration of the measured antenna patterns.

©2015 CommScope, Inc. All rights reserved. All trademarks identified by ® or ™ are registered trademarks, respectively, of CommScope.
All specifications are subject to change without notice. See www.commscope.com for the most current information. Revised: June 11, 2014

Product Specifications

VHLP1-38-1GR

Operating Frequency Band	Bands correspond with CCIR recommendations or common allocations used throughout the world. Other ranges can be accommodated on special order.
Packing	Andrew standard packing is suitable for export. Antennas are shipped as standard in totally recyclable cardboard or wire-bound crates (dependent on product). For your convenience, Andrew offers heavy duty export packing options.
Radiation Pattern Envelope Reference (RPE)	Radiation patterns determine an antenna's ability to discriminate against unwanted signals under conditions of radio congestion. Radiation patterns are dependent on antenna series, size, and frequency.
Return Loss	The figure that indicates the proportion of radio waves incident upon the antenna that are rejected as a ratio of those that are accepted.
Side Force (FS)	Maximum side force exerted on the mounting pipe as a result of wind from the most critical direction for this parameter. The individual maximums specified may not occur simultaneously. All forces are referenced to the mounting pipe.
Twisting Moment (MT)	Maximum forces exerted on a supporting structure as a result of wind from the most critical direction for this parameter. The individual maximums specified may not occur simultaneously. All forces are referenced to the mounting pipe.
VSWR	Maximum; is the guaranteed Peak Voltage-Standing-Wave-Ratio within the operating band.
Wind Velocity Operational	The wind speed where the antenna deflection is equal to or less than 0.1 degrees. In the case of ValuLine antennas, it is defined as a maximum deflection of 0.3 x the 3 dB beam width of the antenna.
Wind Velocity Survival Rating	The maximum wind speed the antenna, including mounts and radomes, where applicable, will withstand without permanent deformation. Realignment may be required. This wind speed is applicable to antenna with the specified amount of radial ice.

©2015 CommScope, Inc. All rights reserved. All trademarks identified by ® or ™ are registered trademarks, respectively, of CommScope.
All specifications are subject to change without notice. See www.commscope.com for the most current information. Revised: June 11, 2014

ATTACHMENT 3

International Telecommunication Union

ITU-R

Radiocommunication Sector of ITU

Recommendation ITU-R F.1498-1

(05/2002)

Deployment characteristics of fixed service systems in the band 37-40 GHz for use in sharing studies

F Series

Fixed service

International Telecommunication Union

Foreword

The role of the Radiocommunication Sector is to ensure the rational, equitable, efficient and economical use of the radio-frequency spectrum by all radiocommunication services, including satellite services, and carry out studies without limit of frequency range on the basis of which Recommendations are adopted.

The regulatory and policy functions of the Radiocommunication Sector are performed by World and Regional Radiocommunication Conferences and Radiocommunication Assemblies supported by Study Groups.

Policy on Intellectual Property Right (IPR)

ITU-R policy on IPR is described in the Common Patent Policy for ITU-T/ITU-R/ISO/IEC referenced in Annex 1 of Resolution ITU-R 1. Forms to be used for the submission of patent statements and licensing declarations by patent holders are available from http://www.itu.int/ITU-R/go/patents/en where the Guidelines for Implementation of the Common Patent Policy for ITU-T/ITU-R/ISO/IEC and the ITU-R patent information database can also be found.

Series of ITU-R Recommendations

(Also available online at http://www.itu.int/publ/R-REC/en)

Series	Title
BO	Satellite delivery
BR	Recording for production, archival and play-out; film for television
BS	Broadcasting service (sound)
BT	Broadcasting service (television)
F	**Fixed service**
M	Mobile, radiodetermination, amateur and related satellite services
P	Radiowave propagation
RA	Radio astronomy
RS	Remote sensing systems
S	Fixed-satellite service
SA	Space applications and meteorology
SF	Frequency sharing and coordination between fixed-satellite and fixed service systems
SM	Spectrum management
SNG	Satellite news gathering
TF	Time signals and frequency standards emissions
V	Vocabulary and related subjects

Note: *This ITU-R Recommendation was approved in English under the procedure detailed in Resolution ITU-R 1.*

Electronic Publication
Geneva, 2009

© ITU 2009

All rights reserved. No part of this publication may be reproduced, by any means whatsoever, without written permission of ITU.

RECOMMENDATION ITU-R F.1498-1*

Deployment characteristics of fixed service systems in the band 37-40 GHz for use in sharing studies

(2000-2002)

Scope

This Recommendation provides deployment characteristics of fixed wireless systems for use in sharing studies, aimed at efficient spectrum utilization of the band 37-40 GHz to be utilized for high-density applications in the fixed service (HDFS). The Annex gives examples of high-density deployment situations of point-to-point systems used for links between mobile base stations and infrastructure networks as well as subscriber based point-to-point and point-to-multipoint networks that substitute for optical fibre subscriber access connections.

The ITU Radiocommunication Assembly,

considering

a) that the band 37-40 GHz is allocated to the fixed service (FS) on a primary basis;

b) that the telecommunication deregulation trend increases demand for competitive local access alternatives;

c) that point-to-point (P-P) FS systems are deployed on a large scale and their use is growing in the band 37-40 GHz;

d) that mobile network and competitive access infrastructures represent the major FS applications in this band;

e) that an increasing number of P-P and point-to-multipoint (P-MP) FS stations are deployed or being planned for local access use in the band 37-40 GHz;

f) that the high concentrations of service users in urban, suburban and industrial areas require high-density deployment of user terminals in these areas;

g) that propagation conditions in this band are predominantly controlled by rain attenuation;

h) that technological progress in system implementation and deployment are continually improving competitive local access service provisioning in this band;

j) that emerging applications in the high density fixed service (HDFS) systems such as broadband wireless access (BWA) may require availability objectives of at least 99.999% at 1×10^{-6} bit error rate (BER) threshold and nominal BERs of 1×10^{-11} under clear-sky conditions;

k) that in order to achieve such performance, link budgets may require coding gain such as forward error correction (FEC) coding gain;

l) that the band 37.5-40 GHz is also allocated on a primary basis to the fixed-satellite service (FSS) (space-to-Earth) and that an increasing number of FSS systems are being planned for this band;

---

* Radiocommunication Study Group 5 made editorial amendments to this Recommendation in 2009 in accordance with Resolution ITU-R 1.

recognizing

a) that fixed systems in the band 37-40 GHz include ubiquitous deployment of P-P and P-MP systems over specific service areas;

b) that administrations may authorize P-P and P-MP systems using discrete channelling or frequency block assignments; within a frequency block, it is common practice to permit a range of technologies, carrier frequency bandwidths and access techniques,

recommends

1 that efficient spectrum utilization and performance and availability, based on the applicable ITU-T and ITU-R Recommendations, be primary considerations for high-density deployment of systems in the FS in the band 37-40 GHz (see Note 1);

2 that the propagation conditions in this band be advantageously used in path engineering to achieve extensive frequency reuse;

3 that Annex 1 can be referred to for FS system deployment guidance in the band 37-40 GHz for use in sharing studies.

NOTE 1 – Relevant Recommendations are, *inter alia*:

ITU-T Recommendations

ITU-T Recommendation G.821 – Error performance of an international digital connection operating at a bit rate below the primary rate and forming part of an integrated services digital network.

ITU-T Recommendation G.826 – Error performance parameters and objectives for international constant bit rate digital paths at or above the primary rate.

ITU-T Recommendation G.827 – Availability parameters and objectives for path elements of international constant bit rate digital paths at or above the primary rate.

ITU-T Recommendation G.828 – Error performance parameters and objectives for international, constant bit rate synchronous digital paths.

ITU-R Recommendations

Recommendation ITU-R F.697 – Error performance and availability objectives for the local-grade portion at each end of an ISDN connection at a bit rate below the primary rate utilizing digital radio-relay systems.

Recommendation ITU-R F.1668 – Error performance objectives for real digital fixed wireless links used in 27 500 km hypothetical reference paths and connections.

Recommendation ITU-R F.1565 – Performance degradation due to interference from other services sharing the same frequency bands on a co-primary basis with real digital fixed wireless systems used in the international and national portions of a 27 500 km hypothetical reference path at or above the primary rate.

Recommendation ITU-R SM.1046 – Definition of spectrum use and efficiency of a radio system.

Recommendation ITU-R SM.1271 – Efficient spectrum utilization using probabilistic methods.

Recommendation ITU-R F.755 – Point-to-multipoint systems used in the fixed service.

Recommendation ITU-R F.758 – Considerations in the development of criteria for sharing between the terrestrial fixed service and other services.

Recommendation ITU-R F.1102 – Characteristics of fixed wireless systems operating in frequency bands above about 17 GHz.

ANNEX 1

Fixed service deployment characteristics in the frequency band 37-40 GHz considered for use in sharing studies

1 Introduction

The progressing deployment of FS stations or FSS earth stations may affect the future expansion of either service in the same frequency band. Accordingly, the FS station deployment patterns and the FSS earth station deployment patterns required for the introduction and growth of viable services have a major impact on band sharing.

A combination of different propagation and service development conditions results in substantial FS deployment differences in the bands below 14 GHz where sharing between FS and GSO FSS systems is currently practised, and in the bands above 17 GHz which are being considered for additional sharing with space services, e.g. the FSS. Propagation conditions result in usable FS hop lengths that are inversely proportional to frequency. The bands below 8 GHz are therefore best suited for long-distance transmission, whereas the much shorter usable hops at frequencies above 17 GHz are particularly well suited for cellular infrastructures and local access applications which are rapidly growing in urban, suburban and industrial areas.

In the bands below 14 GHz, the predominant deployment patterns of both services facilitate sharing, because FS deployment along major communications routes results in branching network configurations that leave large geographical areas free for FSS gateway deployment. This facilitates realizing the interservice separation distances that are needed to limit interference to tolerable levels.

In the band 37-40 GHz, however, the predominant FS deployment pattern is characterized by mobile network infrastructures and direct subscriber access in local areas of high population density, concentrated industrial activity or campus settings, and FSS deployment patterns could include these areas as well. FSS earth station deployment outside areas of dense FS deployment should present few coordination problems. The same is not necessarily true with respect to the deployment of FSS earth stations within and adjacent to the FS deployment and area-wide FS licence areas, and vice versa.

The information on FS deployment, presented in this Annex, is intended to be used in the assessment of FS/FSS earth station sharing in the 38 GHz band.

2 Basic differentiation between conventional fixed wireless systems and BWA applications in the FS

FS deployment in the 38 GHz band started with conventional applications migrating upwards from lower frequency bands that are approaching saturation due to increasing deployment or new, more restrictive regulatory measures. The 38 GHz band was particularly attractive for the fast growing mobile infrastructure applications which account for the majority of conventional FS applications in

this band. A favourable regulatory environment in many countries and progress in telecommunications deregulation stimulated a new type of deployment in this band, direct-to-user BWA, which substitutes for and competes with optical fibre access.

Although BWA deployment started by using the commercially available systems that have been developed for conventional P-P FS applications, the BWA deployment patterns and link designs are substantially different in several aspects. The fundamental difference is due to the different service needs. The deployment of conventional FS systems in the 38 GHz band instead of in a lower frequency band with more favourable propagation conditions became necessarily more restricted in usable link length, but fit very well to the requirements of GSM900/1800 systems in urban areas. Commercially available transmitters and receivers are designed for such applications based on trade-offs between high system gain, on the one hand, and low cost, low power consumption, low weight and small size, on the other. This makes it possible for conventional FS applications to satisfy, in a technically and economically viable manner, the substantial percentage of deployment requirements near the upper limit of usable link lengths in the 38 GHz band, which makes large fade margins more practical.

BWA deployment, by comparison, uses substantially smaller link lengths, and would be better served by P-P systems with substantially lower system gain. In fact, the transmitter power in most P-P BWA links is routinely set to or near the lowest adjustable level, which is necessitated by the stringent frequency reuse requirements in high-density cellular deployment. This requires operation with the lowest fade margins that assure the desired link availability. This applies also to the more recently introduced P-MP BWA systems that usually complement P-P deployment by providing service to the users that are closest to the cell hub. Nevertheless, P-MP system may not be able to serve those subscribers within their area of coverage that require higher data rates which can be provided with P-P systems. The shorter links and higher deployment densities of BWA systems result also in substantially higher elevation angles. These two distinctive characteristics of BWA systems make them more susceptible to interference from FSS systems than is the case with conventional FS systems. The net result is that, as far as band sharing capability is concerned, cellular BWA systems display great similarity to cellular mobile systems, due to the high densities and unpredictable locations of subscribers.

3 Representative examples of 38 GHz HDFS deployment

The initial large-scale deployment of P-P systems in the band 37-40 GHz was in mobile networks with a concentration mainly in and around urban and industrial areas. A more recent large-scale FS application in this band represents a new variety of fixed wireless access (FWA) using P-P links that terminate directly on subscriber premises.

3.1 Development of 38 GHz HDFS systems for mobile infrastructure applications

Figure 1 illustrates an example of the current primary application within a mobile network for 38 GHz deployment in urban areas where deployment densities have progressed into the range of 1 to 10 stations per km^2. The links are designed to satisfy availability criteria between 99.99% and 99.999%.

A large number of links in the 38 GHz band are deployed in several countries in Region 1. In Germany, for example, a total of some 11 200 P-P links had been deployed by the end of 2000. In Table 1 the development of the deployment is indicated.

It is anticipated that this number will increase significantly during the next years, with increasing FWA applications. It can also be noted that 80% of the links are concentrated in 15% of the total area (see Fig. 8). The other links are distributed over the remaining area, but there are also numerous areas with no or neglectable 38 GHz applications.

FIGURE 1

Illustrative application of 37-39.5 GHz P-P systems for mobile infrastructure (e.g. GSM1800) in dense urban areas

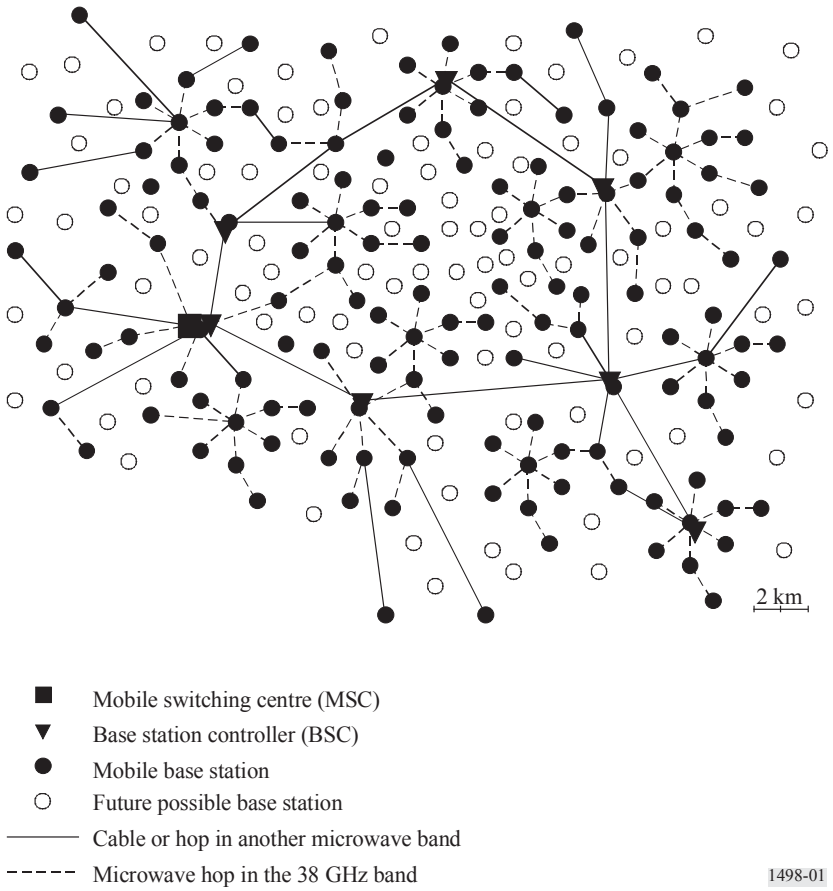

TABLE 1

Development of link deployments in the 38 GHz band in Germany

End of year	1994	1996	1998	2000
No. of links	243	1 867	6 346	11 174

FIGURE 2

Cumulative 38 GHz link length distribution statistics in Germany for mobile infrastructure networks

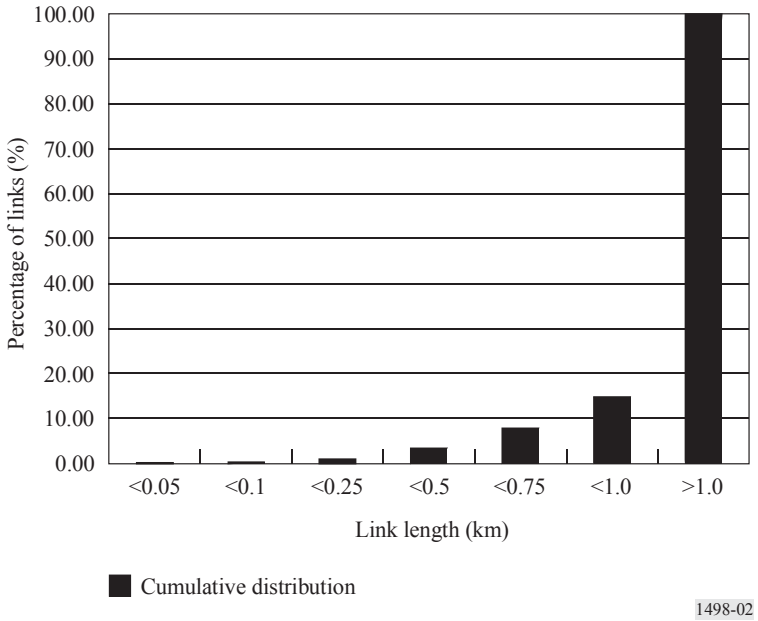

The corresponding distribution of elevation angles is presented in Fig. 3. Only 10 links are currently deployed with elevation angles higher than 25°. The following specific facts may be the main reasons that the elevation angle distribution will be significantly different compared to subscriber based HDFS networks in the United States of America in § 3.2:

– the major number of links is above 1 km (in the range of 1-4 km);

– terminal heights in mobile infrastructure networks are more commonly distributed;

– and possibly architectonic differences in metropolitan areas in Germany and the United States of America.

FIGURE 3

38 GHz link elevation angle distribution statistics in Germany

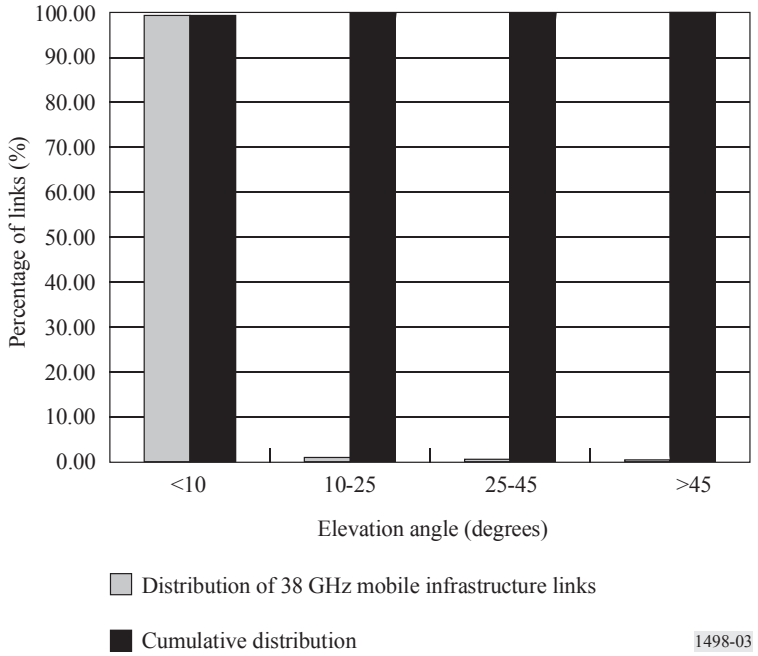

3.2 Deployment of 38 GHz links in the United States of America for subscriber-based HDFS networks

Figure 4 illustrates, for one metropolitan area in the United States of America, a deployment of hub configurations providing various transmission capacities ranging from sub-primary data rates to 155 Mbit/s.[1]

In this area, hub locations are typically on high-rise buildings, and subscriber stations are mounted on rooftops and/or elsewhere on or within the building. Line-of-sight hop lengths are limited to a few kilometres due to propagation conditions and high availability requirements. Distances may increase in low rain fade areas or due to lower availability requirements. P-P deployment densities, expressed by the number of 38 GHz stations per km^2 have already reached up to about 200 per km^2 in some instances and are moving higher. One operator reports a nationwide growth rate in link installation from January 1998 to December 2000 of approximately 400%. At the end of year 2000, one United States of America BWA provider had between 6 000 and 7 000 links.

Generally BWA links in metro areas have shorter ranges and typically operate at low fade margins. Moreover, P-P BWA systems with power control (adaptive transmitter power control (ATPC)) tend to be set up to operate much closer to the threshold in clear-sky conditions with appropriate transmitter power adjustments to meet the 99.999% availability. This can also be achieved with lowering power (ATPC, level setting and attenuator) and small antenna.

[1] Other applications in use or being tested for imminent use include 310 Mbit/s and 620 Mbit/s deployments.

FIGURE 4

Hub deployment in urban area, United States of America

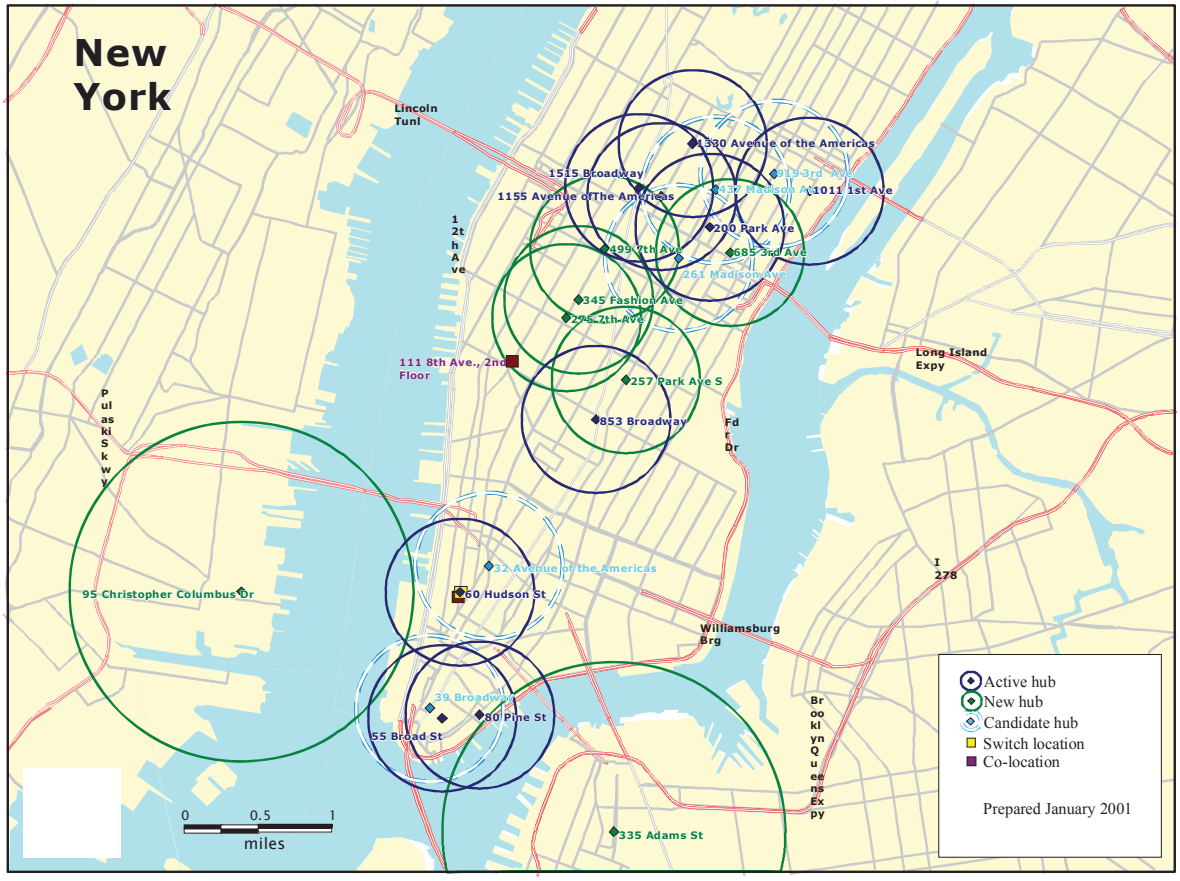

1498-04

The 38 GHz band has been extensively licensed for FS use in the United States of America. There are now approximately 100 FS licensees in the 38 GHz band with over 3 500 area-wide licences. At least three of these United States of America licensees have licences covering 180 million people or more. These 38 GHz licensees are deploying a new type of FS wireless local network providing digital links directly to subscribers. The local networks interface with the public telecommunications network through local switches and fibre rings.

Subscriber links of up to 0.5 km in length account for about one third of the total installed base in all currently served metropolitan areas in the United States of America, links up to 0.75 km for about one half, and links up to 1 km in length for about two thirds of the total. Figures 5 and 6 illustrate the updated link length and elevation angle statistics. With increasing deployment densities, the expected general trend is toward progressively shorter link lengths. The pace at which densities will increase is generally not constricted for technical reasons, but instead is governed by business considerations, such as the acquisition of building access rights. 3G mobile deployments in urban areas, which will require substantial backhaul support, will further increase the link densities.

FIGURE 5

38 GHz link length distribution statistics in the United States of America for subscriber-based HDFS networks

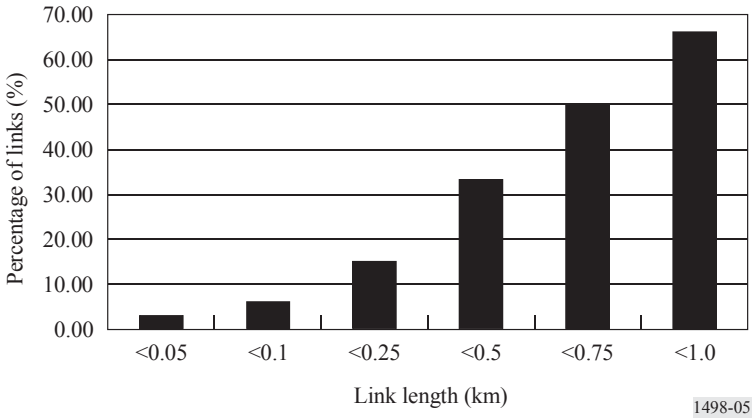

FIGURE 6

38 GHz HDFS elevation angle distribution in the United States of America

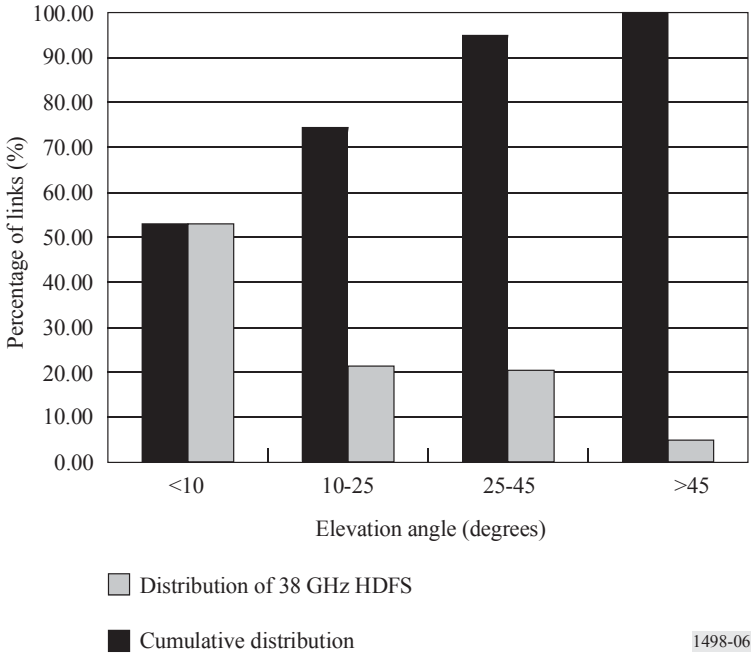

The deployment characteristics illustrated in Figs. 5 and 6 require a new set of link design trade-offs, primarily between spectral efficiency and performance and coverage, which greatly affect the competitiveness of BWA systems as substitutes for optical fibre access systems.

These links are usually engineered to provide 99.999% availability and to satisfy the up-to-date performance objectives. Due to the geographical distribution of subscriber-based BWA systems in the various ITU-R rain zones in the United States of America, about one third of all links satisfy the 99.999% requirement with rain margins up to 10 dB. Reducing the transmitter powers to levels that are as close as practicable to the required minimum satisfying the performance and availability objectives greatly helps to achieve high spectral efficiencies through frequency reuse. However, this

makes FS systems more susceptible to interference from other services. Lower power levels can also be achieved using attenuators and smaller antennas. Since P-MP base stations have fixed power levels certain subscriber locations may have extra margin. Area-licensed 50 MHz channel pairs in the band 38.6-40 GHz enhance flexible service provisioning and spectral efficiency through frequency reuse, similar to cellular and personal communications service operators' practice in the mobile bands below 2 GHz.

Whereas the initial service in the band 38.6-40 GHz was based on the use of P-P systems with a simple modulation scheme, e.g. quadraphase shilt keying (QPSK), the development trend is toward both P-MP systems and more complex modulation schemes that substantially increase the spectral efficiency and offer higher transmission capacities. For example, a 64-quadrature amplitude modulation (64-QAM) P-MP system is capable of providing up to 250 Mbit/s in a 50 MHz radio channel, and a 128-QAM P-P system up to 310 Mbit/s in the same bandwidth. In the United States of America the combined P-P and P-MP station densities per km^2 are already reaching up to about 200 in some instances and continue to increase rapidly. This anticipated growth is contemplated by the licences already granted, and requires no new authorization.

In P-MP systems, unlike P-P systems, the base station antenna is either omnidirectional or sectoral. In each case the base station antenna is oriented to serve all the subscribers within the serving area of that base station. As a result the base station antenna will have less gain and directivity than in the case of the hub end of a series of P-P hops configured in a hub and spoke configuration. In the P-MP configuration the subscriber end of the path will operate with less receive signal level and will therefore require higher gain antennas to maintain an acceptable fade margin to compensate for rain attenuation.

Consistent with vertical radiation patterns of omnidirectional and sectoral antennas, the e.i.r.p. from the base station antenna will decrease as the subscriber terminal moves closer to the base station. This reduced signal strength is somewhat compensated for by the corresponding reduction in path length. However, the net effect is a reduction in signal strength and therefore a corresponding decrease in fade margin. Also, it follows that as the path between the hub and the subscriber decreases, the elevation angle of the subscriber terminal increases, thus reducing available atmospheric loss and increasing the susceptibility of the receiver to interference from satellite emissions.

The described local access services for mobile network infrastructures and direct subscriber access achieve high spectral efficiencies due to favourable frequency reuse conditions which derive from the propagation conditions that limit the usable line-of-sight hop lengths in the band 38 GHz to a few kilometres when 99.999% availability is required. Experience shows that area licensing stimulates operation at the highest possible spectral efficiencies, and simultaneously enables several local competitors to coexist in the same local market, in the same way as cellular and personal communications service operators do in the mobile bands below 2 GHz.

3.3 Emerging deployment example of 38 GHz FS systems in Brazil

In recent years, Brazil has experienced a tremendous growth in the deployment of P-P digital radio systems, mainly with transmission capacity ranging from 2 to 34 Mbit/s, for mobile telecommunication system back-haul connections, as well as for corporate wireless access applications, and digital network at frequency bands higher than 15 GHz. Besides low transmission capacity, new applications have been deployed in 38 GHz band in 155 Mbit/s systems providing digital network. Currently, in the metropolitan areas, due to the saturation at the lower frequency bands, the 38 GHz band have been authorized for the above applications. Currently (middle of 2001), about 2 500 hops of P-P digital systems have been deployed, in the major Brazilian metropolitan cities. It is almost a 10-fold growth in 3.5 years considering that 260 hops were licensed by the end of 1997.

It is noticed that, in case of the 38 GHz band, the growth rate in the wireless access systems for data communications has been bigger than in mobile back-haul systems. Although, hops with high antenna elevation angles, as is the case in the United States of America, have not been reported yet, as consequence of the growth in the wireless access systems for data communication, it is envisaged that high elevation angles, in excess of 25° shall be deployed in the future.

It is also noticed that link length varies from a minimum value of 30 m to a maximum value of 2.8 km.

Furthermore, some trial systems of digital P-MP systems have been deployed, and the local administration is awaiting for trial's report to issue regulations in 2002 that will allow P-MP systems to enter in commercial service.

This is a good example of emerging FS systems deployments in the 38 GHz band.

3.4 Deployment example of 38 GHz FS systems in Japan

In Japan 38 GHz band has been used for subscriber-based fixed wireless links, which are operating under the 60 MHz paired frequency blocks given in Annex 3 (§ 2) to Recommendation ITU-R F.749.

On account of heavy rainfall in most parts of Japan it is a significant issue for operators to consider trade-off between hop length and link availability. Since high availability above 99.999% is becoming a basic requirement of users, hop length of FWA links in the 38 GHz band is limited to the order of 1 km. The typical system capacity is 6 Mbit/s to 155 Mbit/s to meet broadband service applications.

The link length and elevation angle distributions are illustrated in Fig. 7 and Fig. 8, respectively. Since it is not long before the initial 38 GHz system was placed in service in Japan, the routes in Figs. 7 and 8 include those in the planning stage in order to provide statistically effective data.

FIGURE 7

Link length distribution of potential 38 GHz HDFS routes in Japan

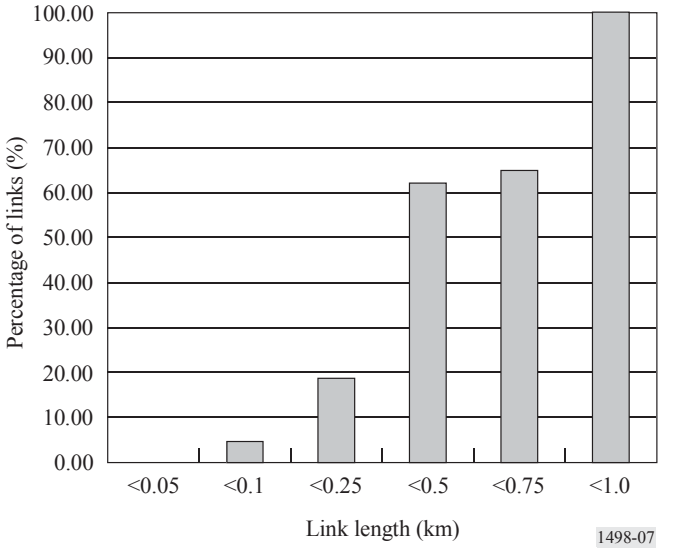

FIGURE 8

Elevation angle distribution of potential 38 GHz HDFS routes in Japan

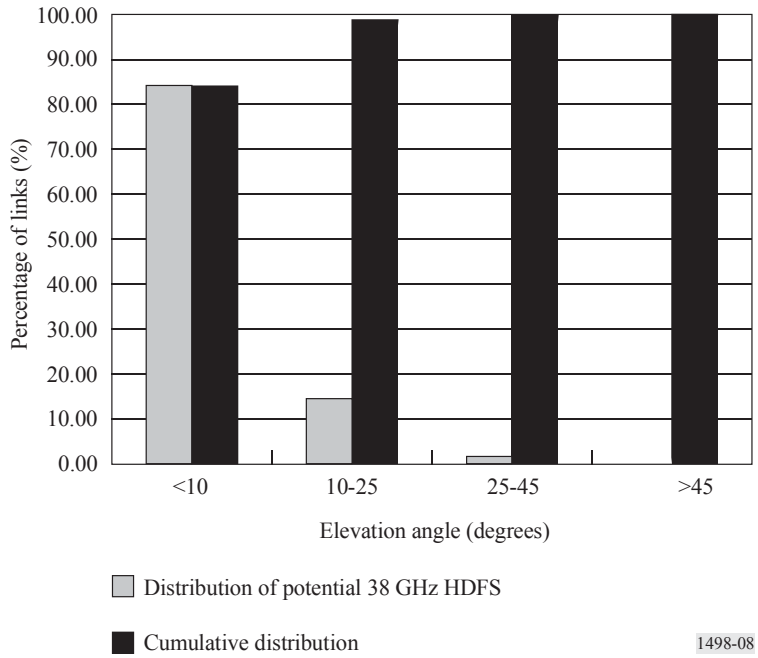

4 Expected trend of systems deployment

While the current major use of the 38 GHz band in many countries is the application of P-P systems with capacities of a multiple of the primary rate using systems with 4 level modulation methods and partly 155 Mbit/s systems with 16 level modulation, in the future higher capacities up to $n \times 155$ Mbit/s can be expected; these higher capacities might use higher level modulation methods (e.g. 128-QAM).

For all types of P-MP systems adaptive modulation schemes (i.e. between 4 to 64 levels) partly already known from frequency division multiple access systems, fast capacity switching to support asynchronous transfer mode (ATM)-traffic and steering antennas might improve future systems in terms of availability, link length, required bandwidth and interference.

The key to all future deployment is to increase the capacity that can be provided to potential customer locations. Certainly improving on technology as indicated in the preceding paragraphs is one way to increase capacity. Another way to increase capacity is to more efficiently deploy BWA systems. Below is a discussion as to how HDFS BWA systems are currently evolving to deliver more capacity in a given area.

4.1 Summary of deployments to date

Current statistics of HDFS deployments to date have been provided in earlier sections of this Annex. These statistics help portray how BWA have been deployed and how the deployment differs from a typical FS deployment. Records show that most of the links deployed to date have elevation angles that are less than 10° apart from the United States of America where almost half of the links deployed to date have elevation angles that are greater than 10°. Moreover, one third of the BWA links deployed in the United States of America are less than 0.5 km in length and about half are less than 0.75 km in length.

4.2 Discussion of frequency reuse in a star topology

Traditionally when an BWA system is deployed a strategically located building is chosen that has line-of-sight to as many potential candidate building locations as possible within the designated area in order to maximize the coverage area. This is known as a star topology. An example of star topology is shown in Fig. 9. A coverage area in a BWA star topology is limited by two factors: line-of-sight and rain outage limitations that will allow for 99.999% availability. In the continental United States these distances are limited to a radius of less than 1.9 km for 45 Mbit/s capacity within a D2 rain zone. (This equates to an area of 11.7 km^2.) While it is true that extending coverage to the maximum range possible provides the most coverage it is also true that frequency reuse is minimized in this case.

FIGURE 9

Star topology of a BWA hub location

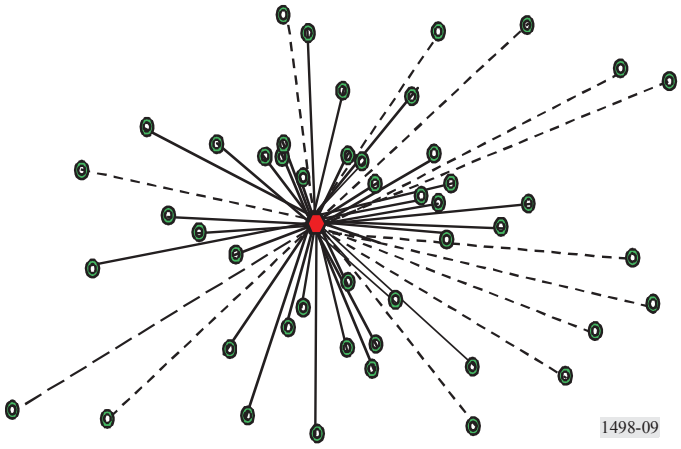

By extending the distance of a link out to the maximum distance allowed by the system gain and sensitivity of BWA equipment a frequency can only be reused every 60°. Figure 10 provides an example of how a frequency used at a hub site can be reused to the maximum extent of six times. If, on the other hand, one limits the distance to 0.8 km a frequency can be reused up to 36 times. Figure 11 shows pictorially how reuse is increased by limiting the distance to 0.8 km or less. The spectrum efficiencies are achieved by keeping the power levels at a minimum while also taking into account that rain attenuation is much more limited at smaller distances than longer distances.

FIGURE 10

Frequency reuse achieved with links at maximum distance of 1.9 km

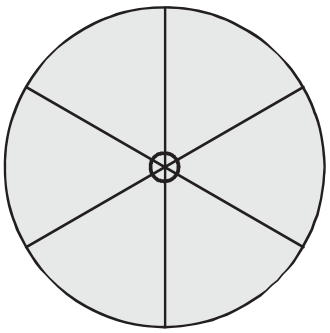

FIGURE 11

Frequency reuse achieved by limiting distance to 0.8 km

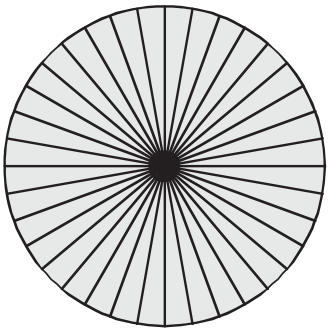

1498-11

One other limitation that exists with a BWA star topology is that line-of-sight to targeted buildings is never 100% even when one selects the tallest building in the area. This poses a challenge to reach as many buildings as possible without having to add additional and costly hub locations.

4.3 Current view of network topology

The current implementation strategy under way to maximize frequency reuse is to both reduce the range covered by a BWA hub location as well as increase the coverage. This is being done by adding small extended range points (SERPs) to existing hubs. The topology is indicated in Fig. 12. Adding these SERPs provides several benefits. It allows the link length to be reduced while also increasing the probability of having line-of-sight to candidate buildings.

FIGURE 12

Topology using SERPs using consecutive wireless links

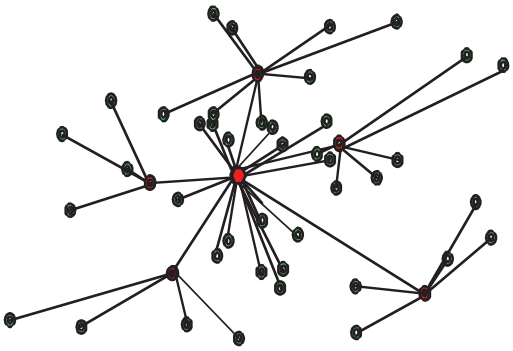

1498-12

One important aspect of this SERP topology is that access to the network will require the customer to traverse two or more wireless links. This means that in order for the end user to achieve 99.999% availability the composite availability of both link A and link B needs to be 99.999%. The implication here is that most links will be limited to the 0.8 km distance limitation and as a result be operating at very low fade margin. Additionally, along with the shorter path lengths and smaller fade margins will be a much higher percentage of links operating with high elevation angles.

4.4 Statistics on new network topology

It must be also pointed out that when the distance on a link decreases the average elevation angle increases. Clearly links that are closer in to the serving BWA hub site have a much higher probability of having a larger elevation angle than links that are further away. The degree of difference is dependent on the local building distribution and heights and is very dependent on the relative height of the serving BWA hubs site.

To evaluate the relative increase in elevation angle two hub locations were selected for evaluation; one on a tall building and a large United States of America city relative to the local environment and the other in a smaller United States of America city with relatively smaller hub height. Both of the hub locations selected are actual locations offering or targeted to offer BWA service. This analysis will provide the range of variation that one can expect for the two extremes in BWA deployment as it relates to elevation angles. Buildings heights were gathered for all targeted buildings that are within the rain radius of the two assessed hubs. Table 2 shows the average elevation angle breakdown for links that are less than 0.8 km in length and those that are greater than 0.8 km in length but still within the rain limitation for 99.999% availability. As can be seen the average elevation angle increases in both cases for small and large buildings between 230% and 380% respectively as the distance is limited to 0.8 km.

TABLE 2

Average elevation angles for two United States of America BWA hubs

Distance (km)	**Elevation angle (small city) (degrees)**	**Elevation angle (big city) (degrees)**
Less than 0.8	7.7	19.6
More than 0.8	2.0	8.6

As indicated earlier it is expected that in order to maintain spectrum efficiency there will be a continued increase in the number and percentage of links deployed within the 0.8 km radius. Even in the smaller market with a much lower hub height the average elevation angle will be close to 8°.

4.5 Adaptive modulation

Emerging BWA technologies (time division duplex and frequency division duplex) may operate on three modulations simultaneously (see Fig. 13) in the same RF carrier: QPSK, 16-QAM and 64-QAM. These deployments increase network capacity considerably and result in a single cell having three distinct rings where subscribers are at the limiting availability, say 99.999%, i.e. links to these subscribers may have no excess fade margin. This can result in an increased number of subscribers affected by inter-service interference. Statistically, the largest percentage of subscribers is close to the HDFS base station and thus has higher elevation angles coinciding with those availability thresholds. These close-in subscribers also meet the criteria for 64-QAM service which demands higher *C*/*I* ratios. It should be noted that close in P-MP subscribers may have excess margin as the hub terminal power is fixed.

FIGURE 13

BWA cell employing three different modulations simultaneously in rain zone (CRANE model in region K)

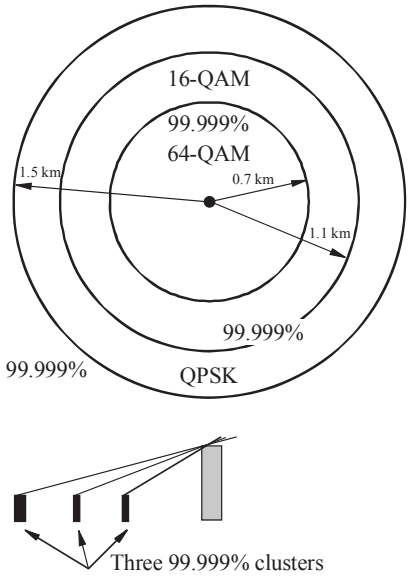

5 Considerations regarding the determination of the coordination area in respect to the FS

In general, coordination between FS stations and FSS earth stations can be exemplified by the following scenarios:

Scenario 1: Areas without FS deployment

The geographical areas in which the FSS will not need to coordinate with the FS will be larger in the 37-40 GHz band in comparison with the currently shared lower frequency bands where the FS deployment is spread out over much larger geographical areas.

Scenario 2: Areas with sparse FS deployment

In intermediate cases, where the FS is sparsely deployed, station-to-station coordination is feasible.

Scenario 3: Areas with dense FS deployment

In service deployment areas where there is dense deployment of FS stations, coordination with and by FSS earth stations should be carried out on a basis other than a station-to-station basis. CPM-97 reported in section 7.5.3.2, § 1, that because high-density FS intra-service station distances are substantially smaller than interservice separation distances, coordination with and by other services should be carried out for high-density FS service areas instead of individual high-density FS stations.

These three deployment scenarios are illustrated in Fig. 14.

FIGURE 14

38 GHz deployment in Germany by the end of 2000

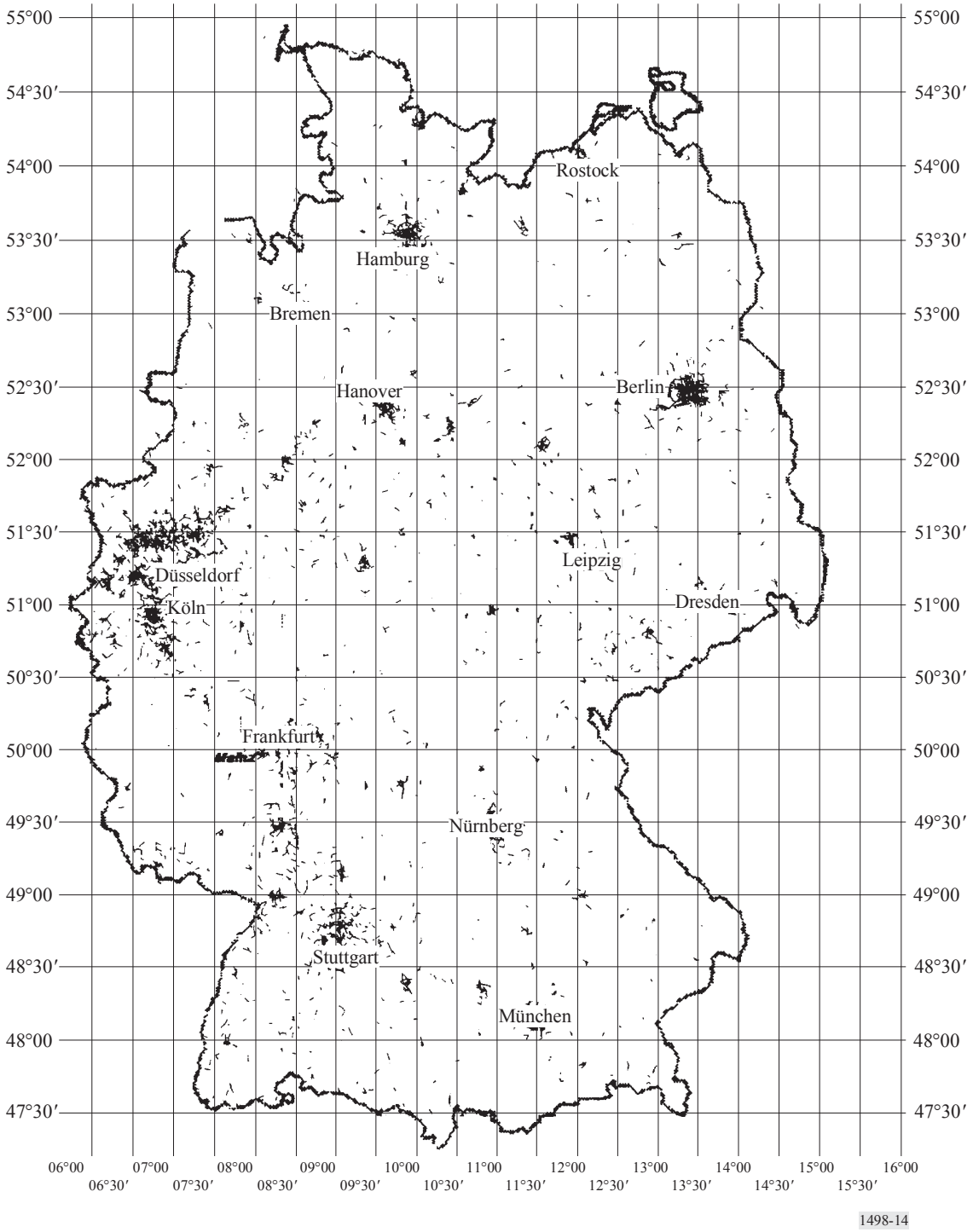

The following additional considerations are of key importance to any coordination between FS stations and FSS earth stations:

– Both the FS and the FSS need to assure line-of-sight coverage of their subscriber base. The fact that FS hub stations are being placed in exposed locations, such as on top of high-rise buildings in many cases, reduces the opportunity to use natural or man-made shielding by the FSS in order to reduce the separation distance. In those instances, most interference paths would have line-of-sight propagation conditions.

– Under area-wide licensing, service is implemented using both P-P and P-MP FS systems. The use of sectoral antennas in the hub stations of P-MP systems is more restrictive to coordination. Such antennas cover a segment of 360° or are stacked for omnidirectional service area coverage, as required. Sectoral antennas reduce the benefits of using angle discrimination in coordination, as compared to parabolic antennas. The actual required separation distance between the FS transmitter and the FSS receiver depends on the actual parameters of both systems, such as FS transmitter power density, minimum operational elevation angles of satellite systems, off-axis antenna gain of both systems, and the terrain topography.

In conclusion HDFS characteristics are uniquely different from the classical FS and backbone infrastructure links. As systems, such as 3G, *et al*. are implemented they will most likely be deployed in pico-cells within micro-cells and act as collector-distributor systems for HDFS and FS backbones as aggregators for further transport to service nodes that include switches, etc.

6 Uncorrelated fading

In cases where a satellite uses downlink power control, uncorrelated rain fading needs to be considered in sharing studies between FS and FSS deployments. A narrow FSS satellite spot beam directed at an earth station has a footprint of at least 200 km. Considering that typical rain cells range between 1 and 5 km (Recommendation ITU-R P.452), subscribers outside the rain cell could receive increased I/N levels, thereby degrading C/I. Figure 15 describes such a situation where an FSS gateway is implemented within the HDFS deployment area. A C/I degradation considered unacceptable can be mitigated by locating the gateway outside the HDFS deployment area.

It should be noted that, due to interference from HDFS, gateway earth stations are unlikely to be implemented in HDFS areas.

FIGURE 15

Uncorrelated rain fading condition

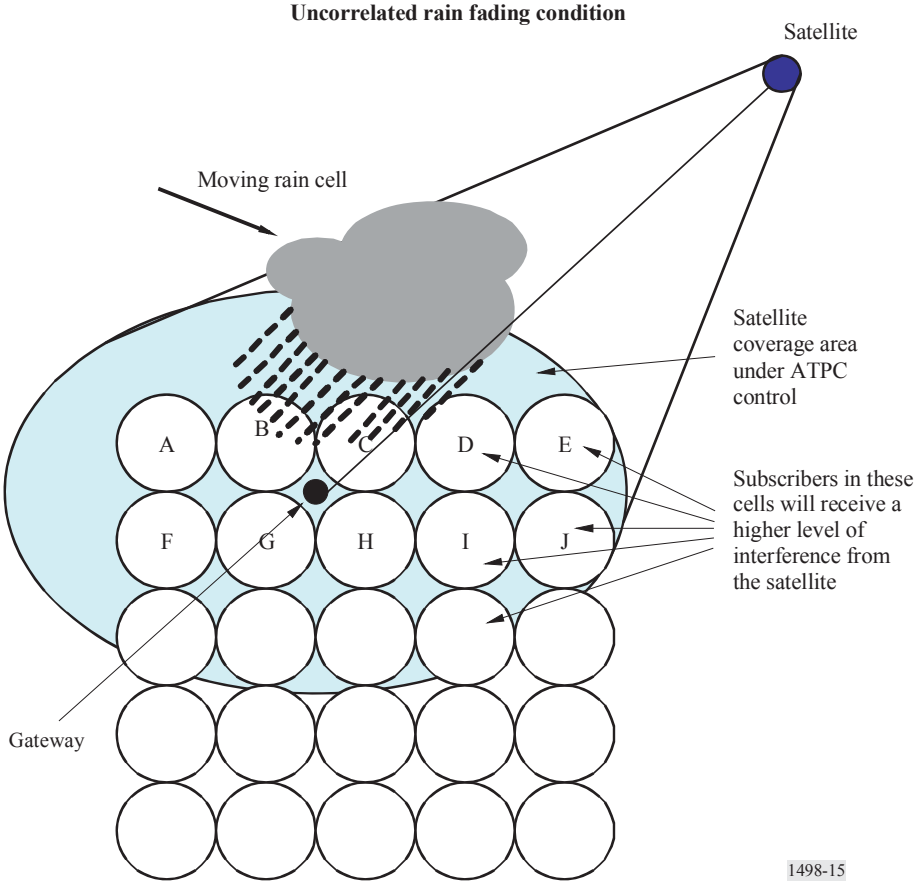

ATTACHMENT 4

5th generation (5G) of communication networks

Background

The United States has been an early adopter in each generation of wireless technology, a major driver of innovation, and remains among the most vibrant wireless markets in the world. In the current generation of technology, called 4G or Long-Term Evolution (LTE), the U.S. benefits from substantial investment by each of the four large national wireless carriers. By most measures, however, the U.S. trails other regions in LTE performance. The U.S. can improve upon 4G results and be a driving force in the next generation of mobile networks called 5G, which will arrive after 2020. For this to occur, work needs to start now.

What is at stake for the United States?

- **Jobs & growth:** 5G is a key technology for many growing U.S. business sectors including software, video, gaming, data analytics, and machine to machine (M2M) communications.
- **Investments:** significant early investment in 5G would help close the gap in ultrafast mobile broadband between the U.S. and other countries.
- **Research:** sustained investment in 5G research would begin to address limitations in mobile broadband availability in rural areas.

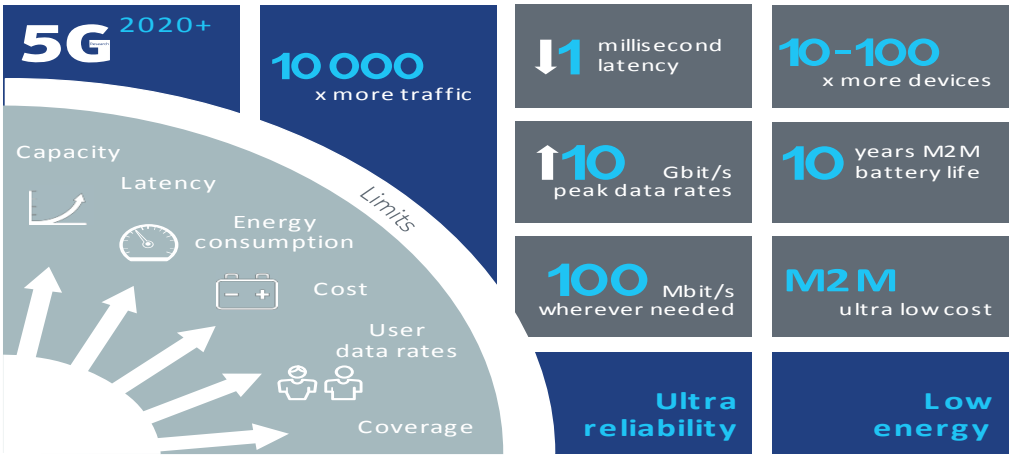

Why 5G matters for citizens?

Demand: Consumers generate an increasing amount of mobile traffic, which necessitates more capacity and lower latency. 5G will offer an expected peak data rate higher than 10 Gbit/s compared to the 300 Mbit/s LTE can offer today, combined with virtually zero latency, i.e. less than 1 ms, meaning that the radio interface will not be the bottleneck even for the most challenging use cases.

Societal innovations. 5G will support applications and industries of the future such as innovative health care services, self-driving cars and next generation of industry automation. 5G will mean stepping away from best effort towards truly reliable communication. Flexible integration of existing access technologies such as LTE and Wi-Fi with new technologies creates a design that is future proof at least until 2030.

Internet of things. 5G will be designed for use cases expanding from humans to machines requiring more of networks. 5G supports the huge growth of machine-to-machine type communication, also called Internet of Things, through flexibility, low costs and low consumption of energy. At the same time, 5G will be reliable and quick enough for even mission-critical wireless control and automation tasks such as self-driving cars.

Energy and cost. 5G will lower costs and consumption of energy. Energy efficiency is an integral part of the design paradigm of 5G, not an afterthought. Virtualized and scalable technologies will further facilitate global adoption. Taking all of these factors together, 5G could bring Internet access to a larger group of people and things.

© Nokia June 2014

Challenges

Harmonization. Various 5G initiatives compete to lead definition of 5G: EU's 5GPPP (or 5G Public-Private-Partnership), the flagship initiative under Horizon 2020; China's IMT-2020 (5G) Promotion Group and the 2020 and Beyond Ad-Hoc Group; Korea's national research program supported by 5G Forum; Russia's, 5GRUS program; and USA's 5G programs by the National Science Foundation.

Spectrum needs: Additional radio spectrum for mobile networks needs to be allocated and put into use quickly to meet the increased capacity and coverage demands of 5G. This means looking at new spectrum bands such as millimeter wave and centimeter wave, and using available spectrum efficiently.

Density: 5G we will need to use many more base stations to meet the performance needs of future applications. These dense networks will be deployed as heterogeneous networks, combining macro sites with smaller base stations and using a range of radio access technologies including LTE-A, Wi-Fi and any future 5G technologies. These technologies will be used in macro, small and super small cells and will integrate various radio technologies flexibly and in various combinations.

Performance: In 5G the best possible network performance will not be just about peak speed. There will be a wide range of performance measures to meet individual requirements imposed by each use case. Some real-time applications, such as driverless cars, will require virtually zero latency, while others, such as 3D video capture, will be more tolerant to latency but will require high capacity upload instead.

Net Neutrality regulation: Regulations in the U.S. should permit operators to innovate by offering prioritized or specialized services subject to transparency requirements and other appropriate safeguards.

Virtualization, telco cloud, big data and analytics are emerging key technologies enabling service agility, scalability, and efficiency of mobile networks. 5G networks will need to take full advantage of these technologies in order to deliver on the expectations towards 5G.

Recommendations for policy makers

- Continue to support investment in 5G research and coordinate through standardization and other initiatives to create a 5G ecosystem driven by investment and standardization activities including negotiating internationally for common definitions of 5G.
- Allocate more spectrum quickly and put a plan in place for spectrum for mobile broadband between 3.5 and 100 GHz.
- Any overhaul of telecommunications legislation should have the goal of increasing investment and reducing regulatory barriers to innovation. Clear, stable, and predictable rules of conduct backed by enforcement are preferable to ongoing rulemakings that regularly change the regulatory environment.
- Possible regulation on Net Neutrality should allow innovation in all stages of the value chain by offering higher speeds, guaranteed quality and specialized services, many of which have not been invented yet. At the same time blocking and throttling of traffic at any stage of the value chain should not be allowed.
- 5G necessitate a strong and vibrant standardization system that incentivizes companies to continue sharing innovations for inclusion in standards. For this to occur, access to injunctive relief for standard essential patents (SEPs) cannot be eliminated without having an alternative mechanism in place to facilitate licensing and consequently provide an adequate return on investment.

For further information, please contact:
Brian Hendricks, Head of Technology Policy, +1-571-355-3854, brian.hendricks@nsn.com

On the Internet: www.nsn.com/governmentrelations

© Nokia June 2014