Engineering and
Advanced Technology

DSTAC Presentation
OMS and Optimum Services

March 12, 2015

Presented by: Ken Silver, Cablevision

DSTAC Presentation
OMS Keyladder

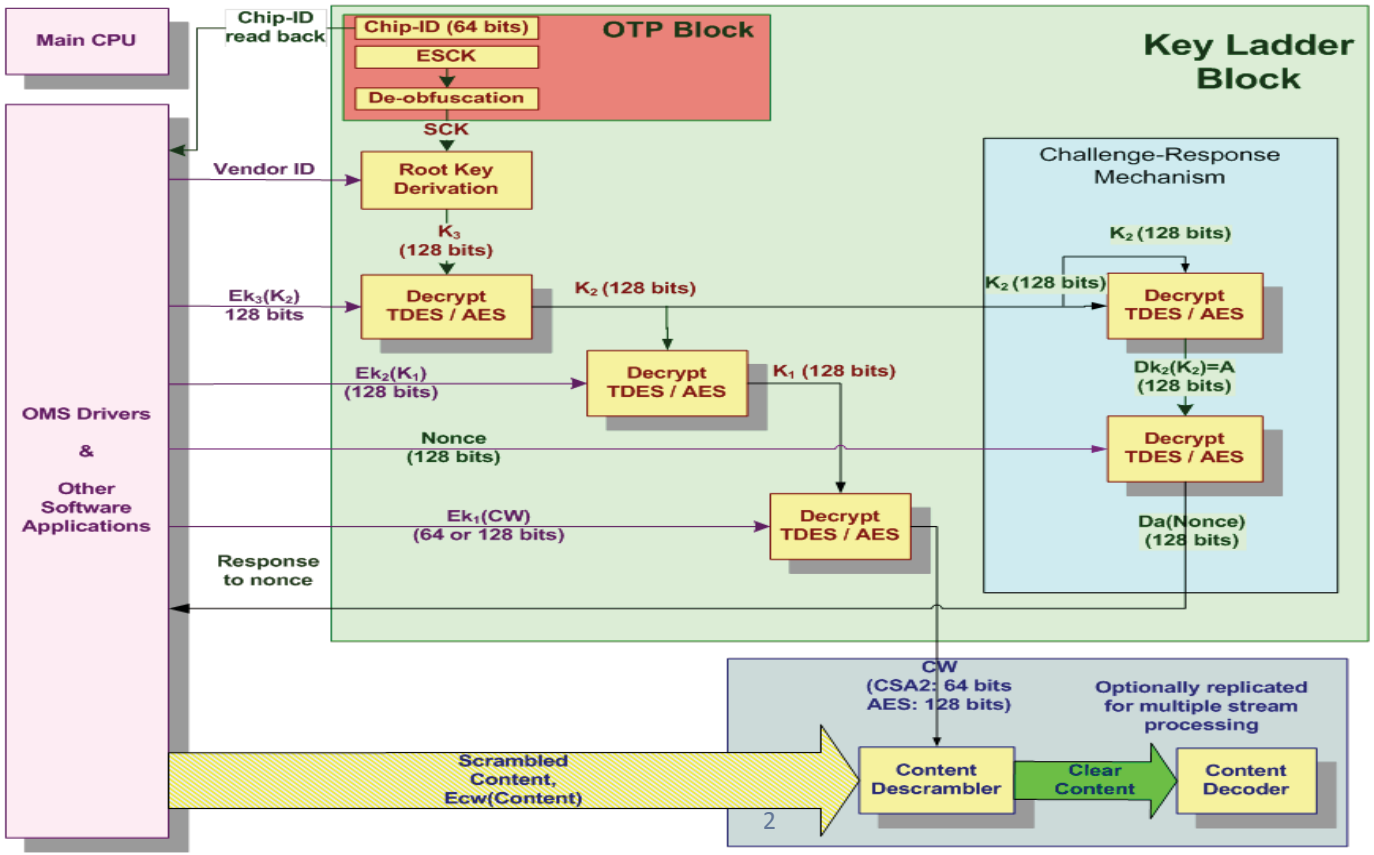

Source:
SCTE 201 2013

"Open Media Security (OMS) Root Key Derivation Profiles and Test Vectors"

DSTAC Presentation

Cablevision Technical Environment

* **Cablevision's OMS System**
  * Is a highly secure, hardware based CAS system
  * Uses unique hardware signatures for each compatible device.
    * Each device gets a unique key.
    * Supports usage licensing for the highest quality video content, including 3-D and 4K Ultra-HD
  * Provides CAS as a Service to a fully integrated User Interface product offering
  * Provides support for both local set top and cloud-based service offerings
  * Is a proven multi-vendor, multi-MSO solution for systems with high-speed trusted return paths
  * Depends on a complex set of trust relationships and contractual relationships as part of an operational ecosystem

DSTAC Presentation
The “Optimum App”

- Optimum App
  - Access to all Optimum Services
  - Full lineup of services, movies and programming
  - Available for IPAD, IPhone, Android, MAC, PC & Kindle
  - Multi-platform, multi-OS, multi-DRM support
  - In full production deployment to all Cablevision customers.

DSTAC Presentation
“Optimum App Guide”

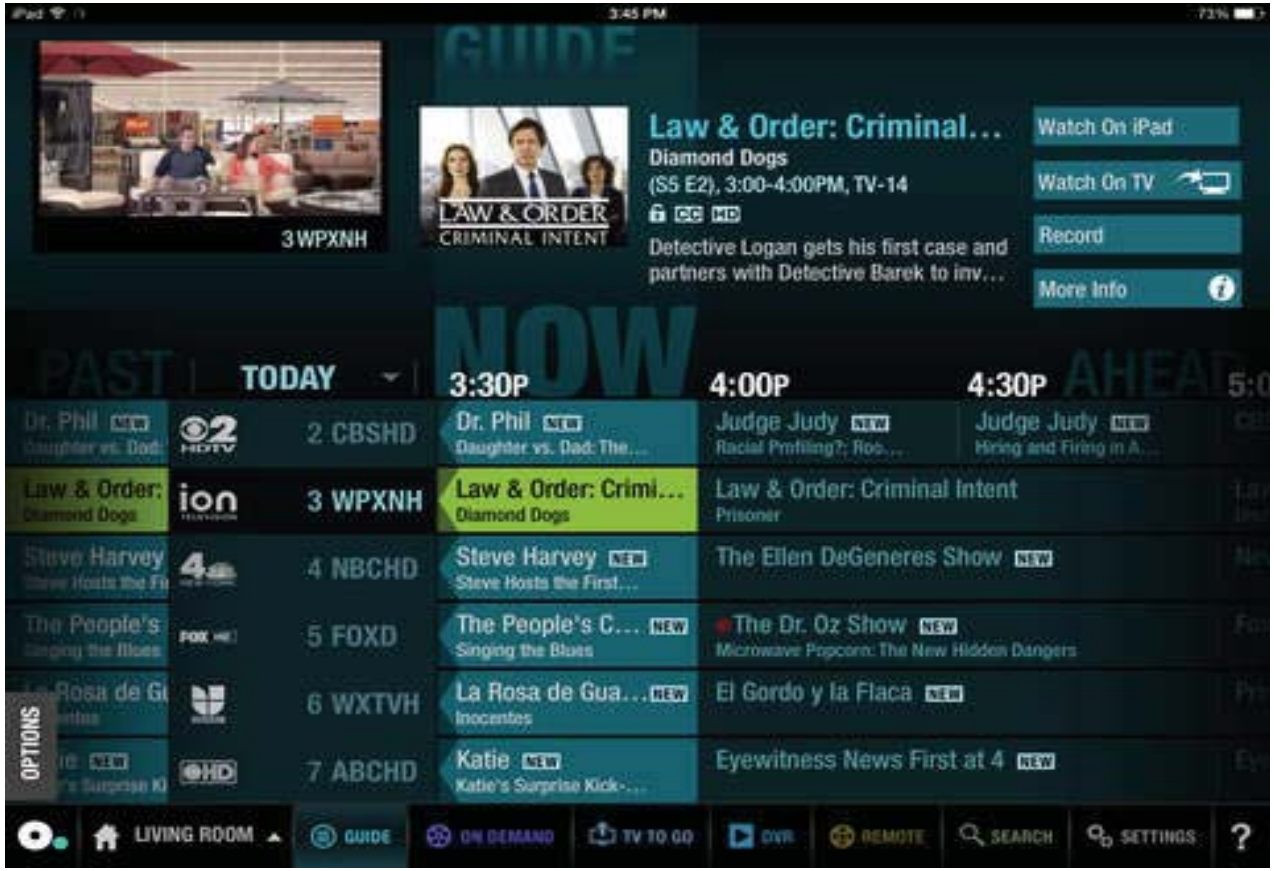

- Optimum App Guide
  - One-touch access to all entertainment content
  - Matches the features, look and feel of the Cablevision set top user interface
  - Modern, web-oriented, cloud based service approach
  - Integrated with local set tops