MINTZ LEVIN

Russell H. Fox | 202 434 7483 | rfox@mintz.com

701 Pennsylvania Avenue, N.W.
Washington, D.C. 20004
202-434-7300
202-434-7400 fax
www.mintz.com

June 19, 2015

SUBMITTED ELECTRONICALLY

Marlene H. Dortch
Secretary
Federal Communications Commission
445 12th Street, SW
Washington, DC 20554

Re: Notice of Ex Parte Presentation

IB Docket No. 11-109; IB Docket No. 12-340; IBFS File Nos. SAT-MOD-20101118-00239, SAT-MOD-20120928-00160, SAT-MOD-20120928-00161, SES-MOD-20121001-00872

Dear Ms. Dortch:

On June 17, 2015, the following individuals met with Philip Verveer, Senior Counsel to Chairman Wheeler, and Renee Gregory and Jessica Almond, Legal Advisors to the Chairman: Scott Burgett, Director, GNSS and Software Technology for Garmin International, Inc. ("Garmin"); Anne Swanson, outside counsel for Garmin; James Kirkland, General Counsel for Trimble Navigation Limited ("Trimble"); the undersigned, outside counsel for Trimble; and Catherine Wang, outside counsel for Deere & Company ("Deere") (Trimble, Garmin, and Deere are referred to herein as the "GPS Parties"). On June 18, the same representatives of the GPS Parties and Mark Lewellen, Manager of Spectrum Advocacy for Deere, met with the Commission staff shown in the attached.

In each meeting, the GPS Parties noted the continuing need to protect receivers using the Global Navigation Satellite System ("GNSS") including those using the Global Positioning System ("GPS") from desensitization by operations in adjacent bands. We noted, among other things, the favorable performance of GNSS receivers relative to other mass market receivers and the difference between protections needed for communications and navigation devices. We stated that we remain committed to working with the Commission staff, other federal stakeholders, and interested third parties to protect critical GNSS applications from interference while potentially exploring ways that currently underutilized spectrum in adjacent bands can be made more productive. We otherwise covered the points expressed in the attached presentation (dated June 2015) and made available an earlier presentation (March 2015) for additional background.

Pursuant to Section 1.1206(b)(2) of the Commission's rules, an electronic copy of this letter and the attachments are being filed for inclusion in the above-referenced dockets. Copies of this letter and attachments are being provided to all Commission employees who attended the meetings. Please direct any questions regarding this filing to the undersigned.

Very truly yours,

/s/ Russell H. Fox

Russell H. Fox
Counsel for Trimble Navigation Limited

cc: (each electronically and with attachments)
Philip Verveer
Renee Gregory
Jessica Almond
Julius Knapp
Jonathan Chambers
Ronald Repasi
Paul Murray
Charles Mathias
Michael Ha
Jennifer Tatel
Steven Jones

FCC ATTENDEES – JUNE 18, 2015 MEETING WITH GPS PARTIES

NAME	BUREAU/OFFICE
Julius Knapp	Office of Engineering and Technology (OET)
Ronald Repasi	OET
Paul Murray	OET
Steven Jones (by phone)	OET
Michael Ha	OET
Charles Mathias	Wireless Telecommunications Bureau
Jennifer Tatel	Office of General Counsel
Jonathan Chambers	Office of Strategic Planning and Policy Analysis

MSS – GNSS Technical Issues

GPS Innovation Alliance

June 2015

GPS Innovation Alliance

www.gpsalliance.org

Technical Context

- There are nearly 1 billion GNSS receivers in use in North America, in a tremendous variety of devices and form factors, supporting an equally diverse set of end user applications
- To protect continuing GNSS innovation, any change in the interference environment through authorization of increased terrestrial use of adjacent frequencies must support development of GNSS receivers across the full price/value/performance spectrum
  - For example, the Internet of Things and other new economic applications require location awareness in “things” large and small, expensive and inexpensive
- Higher precision accuracy will only become more important in safety of life applications such as intelligent transportation, including driverless cars
- To date, GNSS/terrestrial coexistence has been characterized as a matter of insufficient interference tolerance in GNSS receivers, without any objective benchmarking versus other mass market wireless devices, where reasonable price and performance expectations have been applied

Wireless Networks Rely on Significant Spectral Separation – the "Band Gap" and "Duplex Spacing" - to Avoid Self-Interference through Overload

- Mobile spectrum pairings provide wide spacing between downlink and uplink frequencies to mitigate self-interference, including overload interference
- In LTE Band 24 (pictured below as an example), the uplink and downlink frequencies are much CLOSER to the GNSS "receive" band, creating interference issues.
- This frequency spacing is much closer than typical spacing of paired wireless broadband spectrum frequencies, which helps mobile operators prevent interference - GNSS is expected to tolerate what wireless systems cannot.
- GNSS "receive" functions deserve comparable separation from terrestrial transmissions

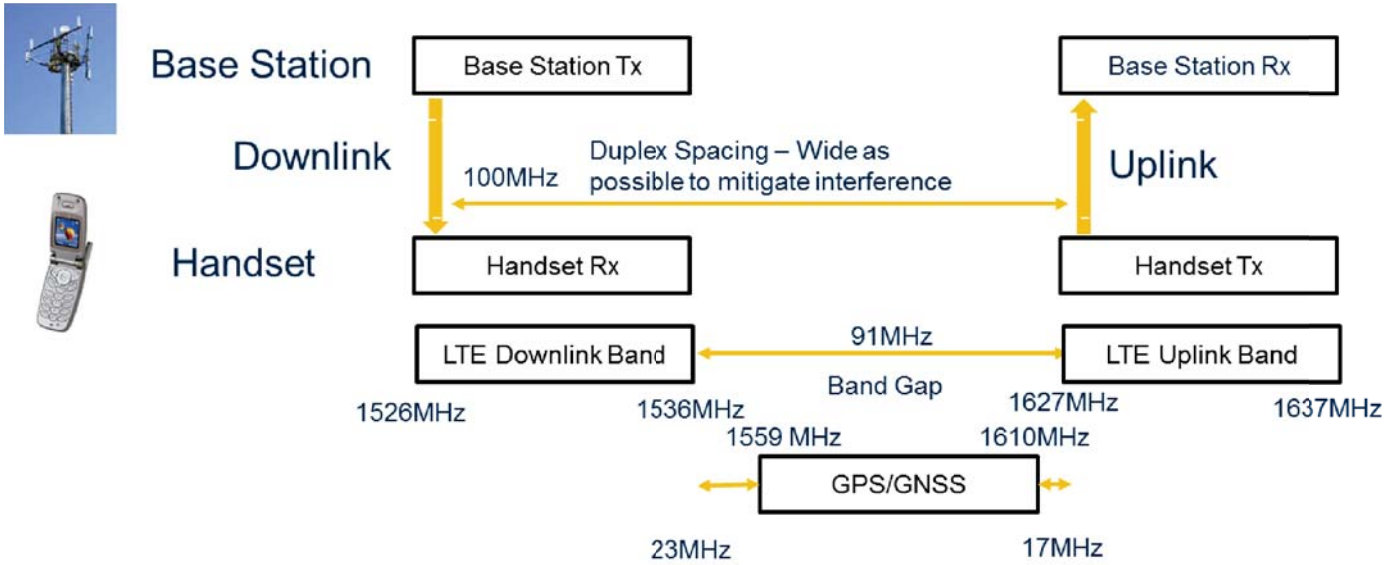

The power differential between LTE transmissions and GNSS signals is far higher, presenting much greater potential for overload

- The power disparity between handset transmission to base station and handset receive from base station is approximately 37-57 dB.
- This power disparity drives wide frequency spacing in wireless broadband band planning to prevent self interference between the Tx and Rx functions
- The disparity between handset transmissions to the base station and GNSS reception can be many billions of times more than in wireless broadband, yet the frequency spacing relative to MSS ATC is smaller

	Typical Separation (Wireless)	Tx to Rx Power Ratio (Wireless)	
Handset Tx to Handset Rx of Base	**100 – 1,000 m**	**37 – 57 dB**	**5,500 - 550,000**
Handset Tx to GPS Rx of Satellite	**1 – 100 m**	**75 – 115 dB**	**32,000,000 - 320,000,000,000**
Base Tx to GPS Rx of Satellite	**100 – 1,000 m**	**94 – 114 dB**	**25,000,000 - 2,500,000,000**

GNSS receivers currently have better interference tolerance than many commercial receive devices

- All receive devices are subject to overload by powerful adjacent band transmissions, because adjacent band transmissions raise the noise floor– this is simple physics and different from out-of-band emissions
- As discussed, LTE handsets are subject to “self-overload” between handset transmission and receive functions unless there is sufficient separation between receive and transmit frequencies
- A study conducted by Aerospace Corporation demonstrated that GNSS receivers are more tolerant of adjacent band transmissions than other mass market receivers

Aerospace Results

Test Results – (I/S)

Higher power closer to signal band edge reflects superior performance

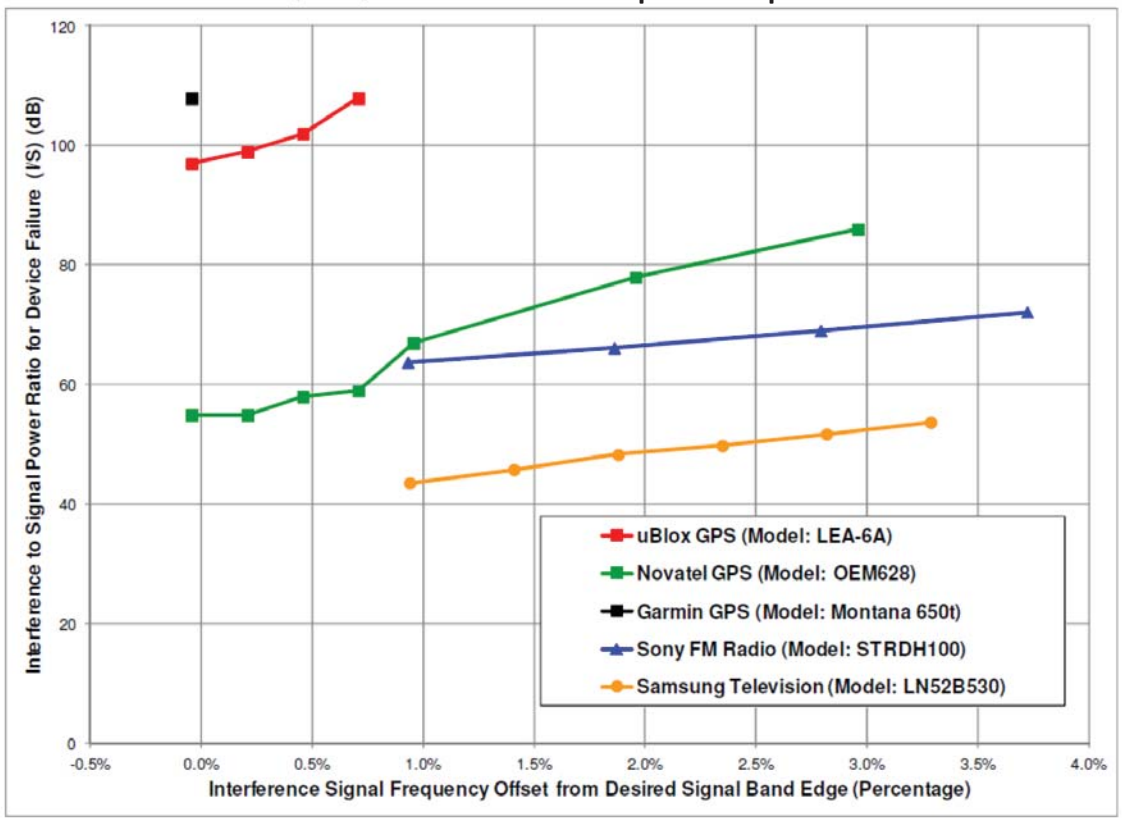

Powell_PNTAB_7_May_2013

13

AEROSPACE

Interference-induced errors have a greater impact on navigation than on communications

- Digital Radio Communications:
  - Incoming message is not known – finding it is the whole point
  - Must determine whether each signal "bit" is a one or a zero
  - Use sophisticated methods to correct errors
- Digital Radio Navigation:
  - Incoming signal sequence (ones and zeros) is known by user
  - The goal of the user is to precisely time the transition from one to zero (and zero to one) to sub-ns accuracy
- Increases in the noise floor reduce the ability of GNSS receivers to accurately time the transitions

Co-existence Considerations

- GNSS receivers should be evaluated under criteria comparable to other mass market devices, and prior innovations should not be penalized with new, overly restrictive performance criteria
- An interference mask defining the permissible transmission characteristics of adjacent band MSS operations is required
  - This mask should be forward looking, not based on the lowest common denominator of all existing GNSS receivers
  - However, the mask must protect receivers across the full price/value continuum
- The definition of harmful interference is a 1 dB increase in the noise floor
  - 1 dB is the accepted interference standard worldwide, and GNSS is a global technology
  - This represents a 25% increase in the noise floor in GNSS bands
  - This standard would be applied based on the forward looking mask

Appendix

Typical Mobile Spectrum Band Gaps and Duplex Gaps are Large

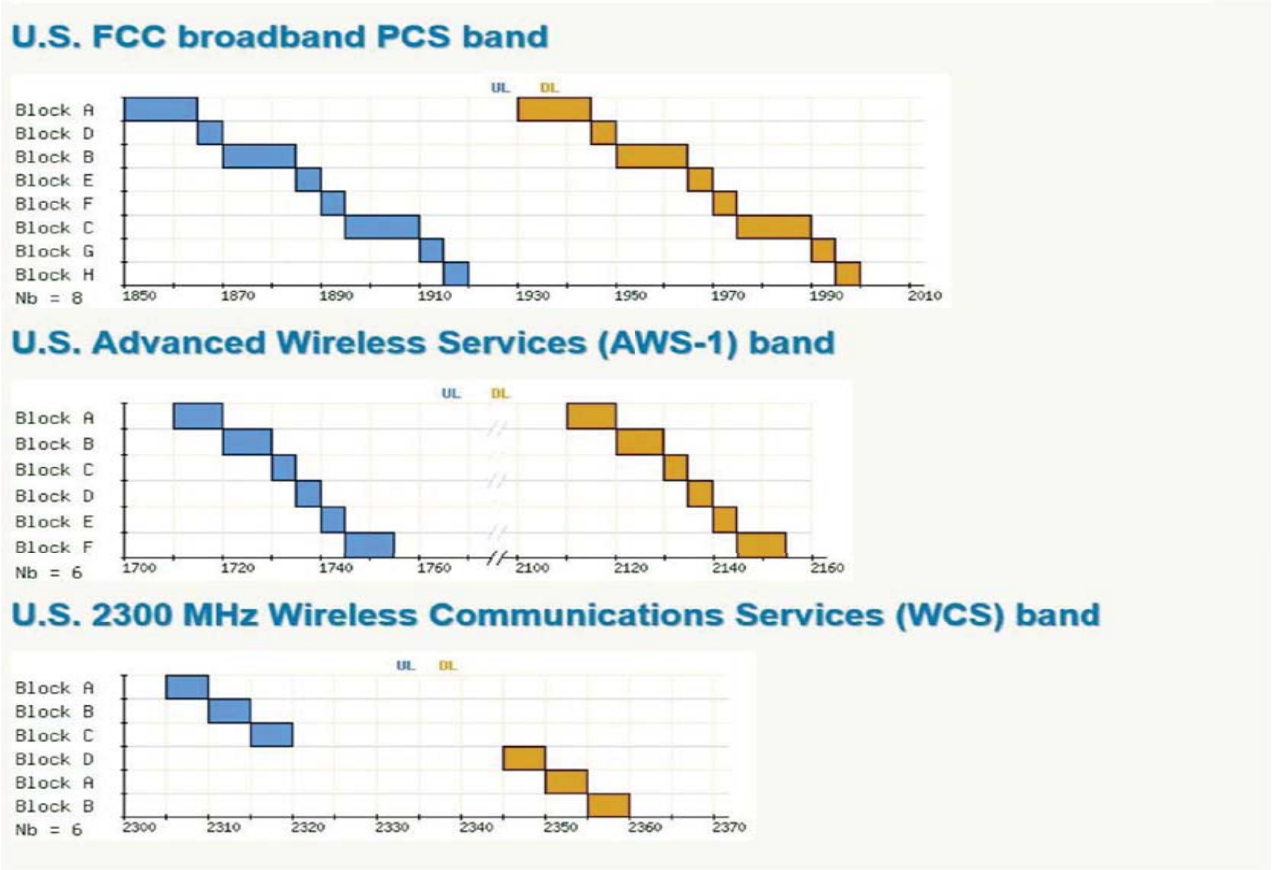

The Importance of GPS to the US Economy
Spectrum Issues Going Forward

GPS Innovation Alliance

March 2015

GPS Innovation Alliance

www.gpsalliance.org

GPS is a Critical Government Asset Supporting Many Mission Critical Tasks

- The Department of Defense has invested over $34 billion in the GPS satellite constellation, with ongoing investment of $1.7 billion per year
  - Over 1 million GPS receivers are in use by our armed forces, from sophisticated weapons systems to “off the shelf” commercial devices
- Other federal government agencies have invested at least $9 billion in GPS based technology to improve efficiency
- Federal Government agencies estimate that GPS technologies and GPS based systems produce billions of dollars in efficiency benefits per year, and these benefits will increase dramatically in the future

Example of Critical Government Use – Public Safety and Disaster Preparedness

- Public Safety, Emergency & Disaster Response professionals use GPS to reduce response times, map disasters and coordinate relief efforts. GPS is also in e911 systems to automatically determine the location of 911 calls.
- A Google commissioned research study reported that use of GPS-based technologies in the United Kingdom reduced travel times for ambulances responding to heart attack incidents by 18 percent. Each minute of response time saved improved the survival rate of heart attack victims by 7-10 percent. Based on these findings, the report estimated that the use of GPS-dependent navigation technologies annually saved 152 lives among UK heart attack victims.
- The federal government operates the GPS-based SARSAT system to detect and locate mariners, aviators, and recreational enthusiasts in distress almost anywhere in the world. Since 1982, SARSAT has contributed to more than 28,000 worldwide rescues.
- More than 23,000 environmental sensor platforms across the planet depend on GPS for accurate geo-referencing and data time stamping, and the NEXRAD weather radars and sea surface radar altimeters require GPS-based time synchronization. NEXRAD is critical to issuing timely severe storm and flood warnings, and local weather forecasts.

GPS is a Critical Enabler of US Jobs

- Google sponsored research found that the U.S. geospatial industry generated approximately $73 Billion in revenues and directly provided at least 500,000 high-wage jobs
  - The industry is composed of geo-data providers, location-enabled device manufacturers, geoapp developers, and a growing network of geospatial experts and educators which use location based information based on GPS and related technologies
- Commercial and industrial segments that make intensive use of GPS, such as construction and agriculture, employ over 3 million people
- The Google report estimated that geospatial services are used on a daily basis by roughly 5.3M U.S. workers today (over 4% of the U.S. workforce)
- Geospatial services drive $1.6 trillion in revenue and $1.4 trillion of cost savings, representing 15 to 20 times the size of the geospatial services industry itself

GPS Produces Substantial Consumer Benefits

- Hundreds of millions GPS receivers are in use in the US, with 100 million more receivers being added every year
- A recent EU report estimates that by 2022 there will be over 7 billion GNSS receivers in use worldwide
- Google sponsored research estimates that use of GPS and the mapping and navigation technologies which depend on them have reduced travel time by over 1.1 billion hours per year worldwide by getting people to their destinations more efficiently.
- More efficient travel reduced global fuel consumption by nearly 1 billion gallons. Savings in the US amount to approximately 300 million gallons, saving US consumers $5 billion
- FCC estimates that "location based services" via smart phones and portable devices will deliver $700 billion in economic value to consumers and businesses over the next decade

GPS is Critical to Air Travel and Supporting Infrastructure

- In 2009, civil aviation contributed $1.3 trillion annually to the national economy and generated more than 10 million jobs, with earnings of $397 billion. The General Aviation sector alone adds at least $150 billion to the U.S. economy annually, supports over 1.2 million jobs, and provides crucial air services to every community in the United States.
- GPS is Integrated into more than 190,000 General Aviation aircraft, and for majority of these aircraft, GPS is the primary means of navigation. GPS is used in almost 80 percent of air carriers' planes, nearly all military planes and in most foreign aircraft that enter U.S. airspace.
- GPS is the only instrument approach possible at many locations, with more than 900 of the roughly 3,000 airports and heliports in the United States and its territories having only GPS-based approaches.
- GPS is the centerpiece of the NextGen system. The FAA estimates the cumulative benefits of NextGen to be $23 billion through 2018; and by 2030, the cumulative benefits grow to $123 billion and reduce CO2 emissions by 64 million tons.
- GPS safety enhancements are expected to prevent the loss of approximately 800 lives over the next 10 years, with an estimated public safety benefit of about $5 billion

GPS Dramatically Improves the Efficiency of Agriculture and Construction

- High-precision GPS receivers are widely used in agriculture – enabling farmers to manage land, water, seed, fertilizer, pesticides and labor. This significantly minimizes costs and waste, greatly increases efficiency and crop yields, and responsibly manages important environmental concerns.
  - The United States Department of Agriculture (USDA) estimated 2012 U.S. net farm income to exceed $122 billion, with farm equity rising to nearly $2.3 trillion. More than 922 million acres are devoted to U.S. agriculture, which employs 2.6 million workers, and high-precision GPS is responsible for important crop production gains.
  - A 2011 study found that during the 2007-2010 crop years, high-precision GPS agriculture practices accounted for $19.9 billion in crop production gains through higher yields and lower input costs.
- GPS technology has become critical to improving the productivity, efficiency and safety of the $537 billon United States construction sector. GPS technology is used in all phases of construction, including surveying and mapping, locating buried and overhead utilities, facilitating heavy machinery precision grading and excavation, and enhancing material application.
  - A 2011 study found annual labor efficiencies of $32 billion, capital efficiencies of $10.6 billion and more efficient use of inputs saving input expenses $2 billion

Use of the MSS/L Band for Nationwide Mobile Broadband Service Represents a Fundamental Change to a "Quiet Spectrum Neighborhood"

- The Mobile Satellite Service MSS L-Band currently licensed to LightSquared and Inmarsat is directly adjacent to the GPS "L1" band
- This radiofrequency band has long been reserved for earth to satellite communications due to its unique physical characteristics
  - At these frequencies, radio signals propagate better through the Earth's atmosphere, improving performance and cost effectiveness of earth satellite communications
- Under pre-existing MSS rules, licensees were allowed to conduct terrestrial operations to fill in coverage gaps in satellite service
- Such coverage gaps are geographically limited – Sirius XM has authority to conduct fill-in terrestrial operations for satellite radio service. The terrestrial portion of this mature, highly utilized service covers 1% of the Continental US
- No terrestrial deployment in L-Band has ever occurred
- GPS developed in this quiet spectrum environment and GPS receivers have been designed to take advantage of it, leading to tremendous innovation

Unique Interference Concerns Due To Proximity of MSS Spectrum to GPS

The L1 GPS signal's received power on earth is 10^{-16}W. A 1500W transmission from a nearby ground transmitter in the immediately neighboring frequency will be **billions of times more powerful** at the GPS receiver's antenna. Result is "overload" of sensitive GPS receivers.

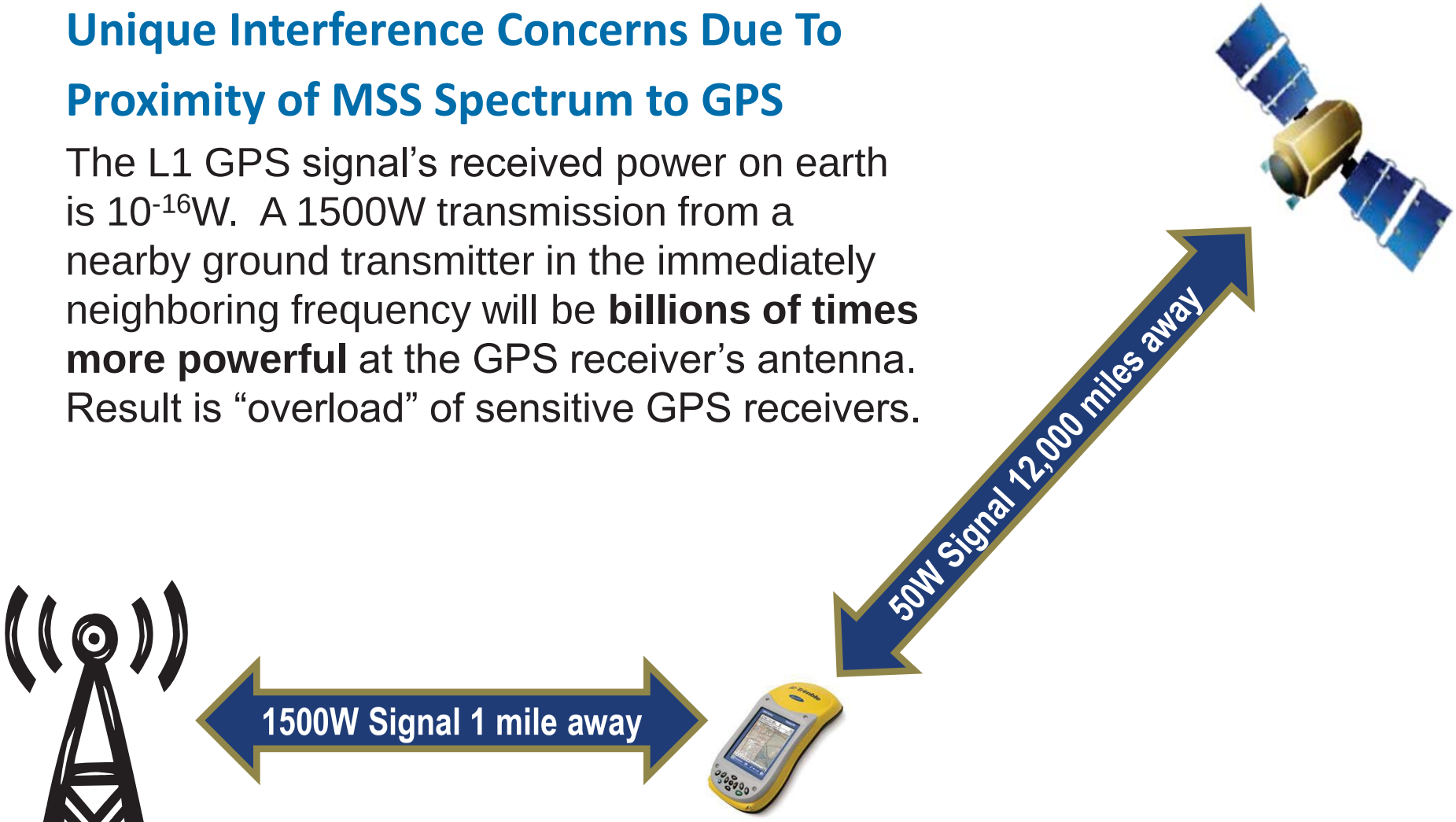

GPS Innovation Alliance

www.gpsalliance.org

No other proposed 3G or 4G broadband wireless service has created GPS interference concerns because there is far greater spectrum separation

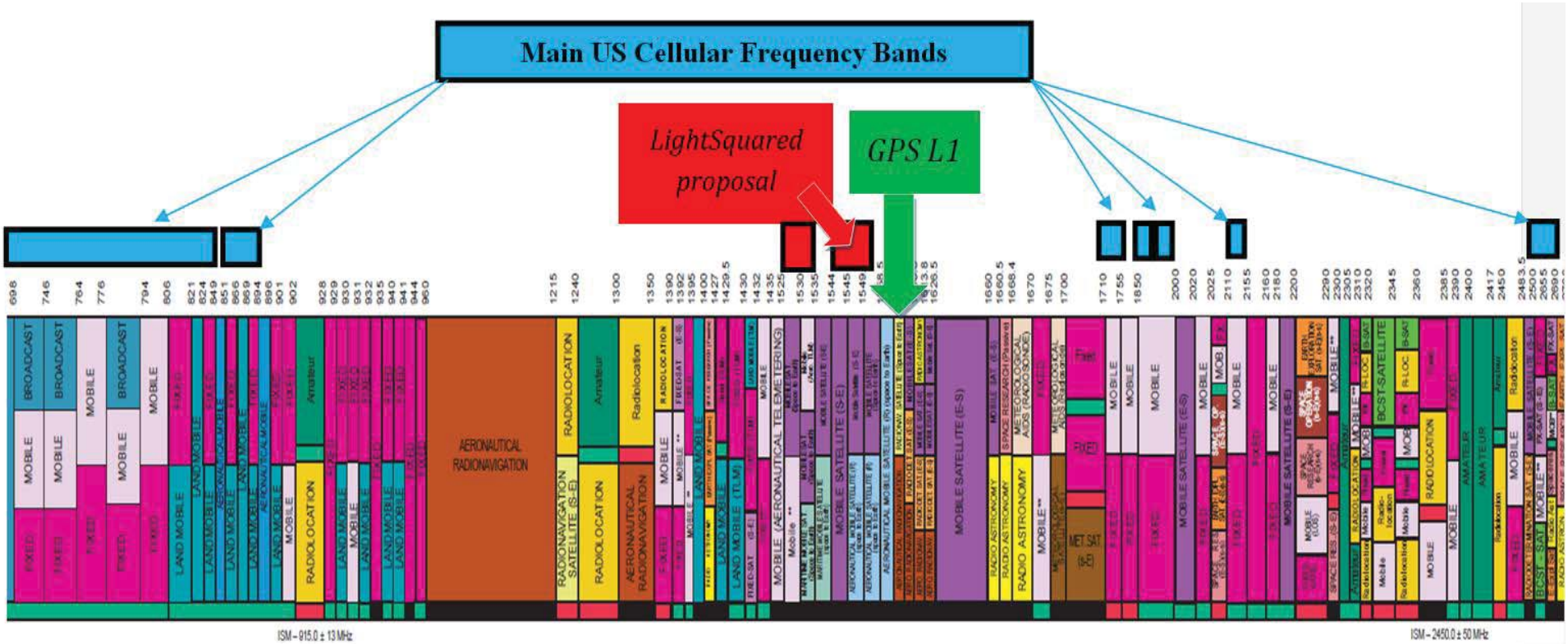

Fig 1. Frequency allocations in the 300MHz – 3GHz Spectrum, indicating GPS L1, Major Cellular Bands and LightSquared proposal
Adapted from *National Telecommunications and Information Administration U.S. Frequency Allocations Chart*

GPS Innovation Alliance

Issues and Concerns in Upcoming Spectrum Management Decisions

- The GPS Innovation Alliance is committed to constructive participation in upcoming FCC proceedings
- These proceedings must involve a thorough examination of the costs and benefits of changes in the spectrum environment near GPS, without uncritical assumptions
- Policy makers should not simply assume that high powered terrestrial mobile broadband is the "highest and best" use of all spectrum
  - Three of the most successful and efficient spectrum uses are satellite based – GPS, satellite radio, and satellite television
  - Future applications (e.g. autonomous "Google cars") require the truly ubiquitous coverage only satellite can provide
- The FCC should take a long term spectrum management approach that supports satellite based innovation by consolidating compatible uses