White Paper

UWB Technology and Regulation

Dr. A. Wilzeck, Dr. M.D. Pérez Guirao, and Dr. E. Dimitrov,
wiseSense GmbH

Contents

1 Introduction ... 1

2 Overview of UWB Technology ... 2
2.1 Definition of UWB ... 2
2.2 Definition of Bandwidth ... 2
2.3 UWB Signal and Modulation Formats ... 4
2.3.1 Introduction ... 4
2.3.2 Impulse-Radio UWB (IR-UWB) ... 4
2.3.3 Direct Sequence UWB (DS-UWB) ... 5
2.3.4 Multiband UWB ... 6
2.3.5 Non-conventional Carrier-based UWB ... 7
2.3.5.1 Frequency Hopping UWB (FH-UWB) ... 7
2.3.5.2 Stepped Frequency Hopping UWB ... 7
2.3.5.3 Swept Frequency UWB – Chirp Signalling ... 7
2.4 Conclusions ... 8

3 Current Status of Worldwide UWB Regulation ... 9
3.1 Introduction ... 9
3.2 UWB Regulation in USA ... 9
3.2.1 Minimum Bandwidth Requirement ... 9
3.2.2 Emission Limits ... 10
3.3 UWB Regulation in Europe ... 10
3.3.1 Minimum Bandwidth Requirement ... 11
3.3.2 Emission Limits ... 11
3.4 Conclusions ... 11

4 Test Methods and Certification Procedures ... 14
4.1 Introduction ... 14
4.2 Situation in USA ... 14
4.2.1 Peak Power Measurement ... 15
4.2.2 RMS-Average Power Spectral Density Measurement ... 15
4.2.3 Note regarding Unconventional UWB Modulation Formats ... 15
4.3 Situation in Europe ... 16
4.3.1 Mean Power Spectral Density Measurement ... 16
4.3.2 Peak Power Measurement ... 17
4.4 Conclusions ... 17

5 Summary and Recommendations ... 19

6 Appendix ... 20
6.1 UWB Interference Avoidance Techniques ... 20
6.1.1 Detect and Avoid Mitigation ... 20
6.1.2 Low Duty Cycle Mitigation ... 20
6.1.3 Transmit Power Control (TPC) ... 20
6.1.4 Black Listing ... 20

7 References ... 21

8 Acronyms & Abbreviations ... 23

1 Introduction

The term ultra-wideband (UWB) was introduced by the US Department of Defence (DoD) around 1989 [1] and commonly refers to signals that have a large relative bandwidth (bandwidth divided by the carrier frequency) or a large absolute bandwidth.

The use of large transmission bandwidths allows for a number of benefits, including accurate ranging, robustness to propagation fading, impressive obstacle penetration and interference rejection. However, generating, receiving and processing UWB signals poses significant challenges that require research and innovation as well as appropriate radio regulatory and standardization frameworks.

The first recognized application for UWB technology was high-speed data transmission over short distances. However, several other application areas have been discovered and are on the way to be realized. These are for instance measurement devices, location tracking, imaging, surveillance and material analysis devices. Particularly, the further development of these applications will require revisions of the current radio regulatory framework.

This white paper aims to provide a comprehensive overview on UWB technology. Section 2 discusses on the scope of the UWB definition and revisits different ways of generating UWB signals. Section 3 summarizes the current status in the UWB regulation in Europe and in the United States of America (USA). Section 4 reviews and evaluates existing measurement procedures and test methods valid today for UWB product certification. Finally, Section 5 recapitulates and draws final conclusions and recommendations to be adapted in order to encourage the technology-neutral development of economically viable UWB solutions.

2 Overview of UWB Technology

The main purpose of this section is to characterize UWB technology in a meaningful way. To do this requires that we carefully define the concept of bandwidth.

2.1 Definition of UWB

The term UWB is relatively general. It includes a variety of applications in different fields e.g. data communication, location and tracking, imaging sensors, object identification, short range radar, etc.

According to the several application areas, there are different ways of generating and modulating UWB signals.

One commonly used definition of UWB is: "*A UWB system is one that has a bandwidth considerably greater than that usually associated with conventional systems*" [4]. As already pointed out in [5] this definition implies that the **extent of the occupied bandwidth is the essential feature that distinguishes UWB** from conventional systems or signals. Of course, this statement requires further elaboration on the meaning of bandwidth. Notably, it **does not restrict the definition of UWB to a particular signal generation form**. Concretely, the term UWB is not restricted to the popular short-pulse systems that instantaneously cover a whole frequency band. Many other techniques, as described in Section 2.3, could possible be and are used to achieve ultra wideband systems or signals.

In fact, each diverse application area of UWB has formulated its own definition reflecting its specific needs and viewpoints. However, the extent of occupied bandwidth appears as an essential feature across all definitions. Additionally, regulatory authorities worldwide have defined spectrum requirements and signal parameters in order to qualify an RF signal as an UWB signal [2, 3]. Along with the minimum signal bandwidth, regulatory authorities define a maximum radiated power spectral density and peak power for UWB signals.

2.2 Definition of Bandwidth

As the extent of bandwidth is a crucial aspect in understanding UWB systems and signals, different bandwidth definitions are discussed in the following.

In general *signal bandwidth* refers to the range of frequencies containing certain energy content or a certain power level of the signal. Otherwise, *device or system bandwidth* refers to the continuous operating range of frequencies over which the device/system performs with respect to some characteristics related to a specific application or mode of operation.

From now on let us focus on *signal bandwidth* and restrict our consideration to real-valued, causal signals with finite energy, as they are used in UWB applications of interest (radar, communications, location & identification, etc.). From an information theoretic point of view, we have to distinguish here between **Fourier** and **Shannon bandwidth**.

Shannon Bandwidth was defined by Shannon [6] as one-half the minimum number of dimensions per second required for representing a modulated signal $s(t)$ in a signal space (N-dimensional Euclidean space), i.e.

$$B = \frac{1}{2}\frac{N}{T} \text{ (dim/sec)}$$

with T representing the symbol period duration of the modulated signal. Note that the concept of Shannon bandwidth makes no real sense for a deterministic signal. As an example, consider an M-PAM and an M-PSK modulated signal. While an M-PAM signal requires one dimension and has $B=1/2T$, the M-PSK signal requires 2 dimensions and has $B=1/T$.

Fourier bandwidth refers to the amount of transmission bandwidth that a signal actually *occupies*, representing the ordinary notion of bandwidth that every communication engineer is familiar with. The Fourier bandwidth is calculated from the Fourier transform. The Fourier Transform (FT) finds out the exact spectral decomposition of a signal $s(t)$.

$$S(f) = \int_{-\infty}^{\infty} s(t) e^{(-2j\pi ft)} dt$$

The values of $S(f)$ characterize entirely the signal $s(t)$, so that it can be reconstructed using the Inverse Fourier Transform (IFT).

From [7], a fundamental relationship between Shannon and Fourier bandwidth states that the Shannon bandwidth B of a modulated signal is at most equal to its Fourier bandwidth W, equality holds if and only if there is no spectrum spreading. Thus,

$$W = \gamma \cdot B$$

with γ being the spreading factor. Note that, spectrum spreading increases the Fourier bandwidth but not the Shannon bandwidth.

The bottom line of this discussion on bandwidth is that when defining UWB signals the extent of occupied bandwidth refers to the extent of Fourier bandwidth. There are many options for calculating the precise Fourier bandwidth of a signal, whereby only the x-dB bandwidth and the β-% occupied bandwidth definitions can be directly measured [8]:

- **Root Mean Square (RMS) bandwidth**

  The RMS bandwidth definition is often used in radar applications and defined as the second moment of the squared magnitude of $S(f)$ about a designated frequency, typically 0 or the spectral center, where the integration is taken over all frequencies ($-\infty < f < +\infty$). Unfortunately, this definition is ambiguous and has difficulties when used with UWB signals.

- ***β*-% Occupied bandwidth**

  This is the frequency range in which a certain percentage of the total spectral power of a signal falls. The residual part of the total power being denoted as β, which, in cases of symmetrical spectra, splits up into $\beta/2$ on each side of the spectrum.

- ***x*-dB Power-Level bandwidth**

  This bandwidth definition denotes the width of the frequency interval occupied by a signal's spectrum, which ranges from a lower cutoff frequency f_l to an upper cutoff frequency f_u, such that beyond this lower and upper cutoff frequencies any discrete spectrum component or continuous spectral power density is at least x dB lower than a predetermined 0 dB reference level. For example: 10 dB

corresponds to one 10th of the reference value. Practically, different cutoff-levels are used depending on the application.

$$L_{cutoff} = 10 \cdot lg\left(\frac{P_{cutoff}}{P_{max}}\right)$$

- ***x* Fractional Energy bandwidth**

  The fractional bandwidth is the ratio of signal bandwidth (x-dB power-level bandwidth) to the center frequency, or more specifically, $2(f_l - f_u)/(f_l + f_u)$. Where f_u and f_l are the upper and lower cutoff frequencies, measured at some fixed level relative to the peak level of the signal.

In any case it should be noted that ***it is not possible to measure bandwidth at all instances of time****. Measurement procedures have to consider always an observation (averaging) time in order to be able to capture all (relevant) spectral components of the signal under study.*

2.3 UWB Signal and Modulation Formats

2.3.1 Introduction

UWB signals can be generated based on different principles, where UWB based on impulses can be viewed as the traditional approach. Nevertheless, UWB signals can be generated in a number of different ways: frequency hopping, chirp signalling or by allowing conventional modulation schemes to work at a very high (coded) data rate. In this section some of these UWB signal generation techniques are introduced.

2.3.2 Impulse-Radio UWB (IR-UWB)

IR-UWB transmits information by means of very short pulses with a very low duty cycle. These pulses directly modulate the baseband signal in terms of position (Pulse Position Modulation, PPM), polarity (Bi-Phase Modulation, BPM) or amplitude (Pulse Amplitude Modulation, PAM). By varying the pulse characteristics (shape, duration, etc.) the characteristics of the frequency spectrum can be controlled.

Generally, the pulse shape determines the spectrum shape, or envelope, i.e. how the energy occupies the frequency domain. Typical pulse shapes are squared or Gaussian.

The pulse duration in the time domain determines the bandwidth in the frequency domain. A narrower pulse in time occupies a larger bandwidth for a shorter period of time. Usually, the IR-UWB signal spreads into several GHz due to pulse durations in time domain in the order of nanoseconds.

An IR-UWB signal can be directly generated in baseband (i.e. carrier-less) without a sinusoid-carrier, or alternatively by mixing a high frequency sinusoid-carrier with an envelope (i.e. carrier-based), this allowing the energy in DC to up-shift into the targeted band. Note that a shift in operating frequency can also be obtained by pulse shaping.

Carrier-less IR-UWB

A carrier-less IR-UWB system drives its antenna directly with a baseband signal. At the transceiver, local oscillators (LOs) and mixers for the RF up/down conversion can be eliminated. The pulse duration in the time domain is usually defined by the delay of digital gates with a sub-nanosecond duration, followed by a pulse shaping filter.

Transmitting the pulses directly to the antennas results in the pulses being filtered due to the properties of the antennas. This filtering can be modelled as a derivative operation as depicted schematically in Figure 1. The same effect occurs at the receive antenna.

Carrier-less IR-UWB frequently works with the family of Gaussian pulses. Generally, higher order derivatives are preferred since these allow moving the baseband signal from DC to the targeted UWB band without additional up-conversions (RF mixing stage). Multiple access schemes can be done by time hopping (TH) codes.

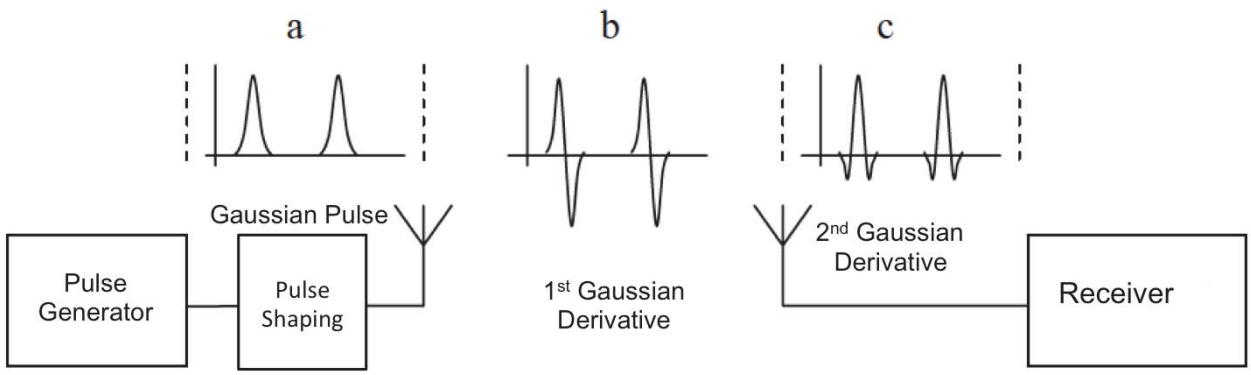

Figure 1: Simplified schematic representation of the carrier-less IR-UWB principle, based on figure 2.4 in [30]

Carrier-based IR-UWB

The IR-UWB signal can also be generated by mixing a high frequency sinusoid-carrier with an envelope, allowing the energy in DC to up-shift into the targeted UWB band. Pulse shapes include rectangular, root-raised cosine and Gaussian. Information can be transmitted using amplitude, pulse position, phase or frequency modulation. Multi-user separation can be done by time hopping (TH) codes or direct-sequence spread spectrum (DS-SS)

The transmitter can be implemented by either up-converting the baseband pulses to a center frequency, i.e. mixing the envelope by the Local Oscillator (LO) (see Figure 2), or directly switching the LO on and off (gating).

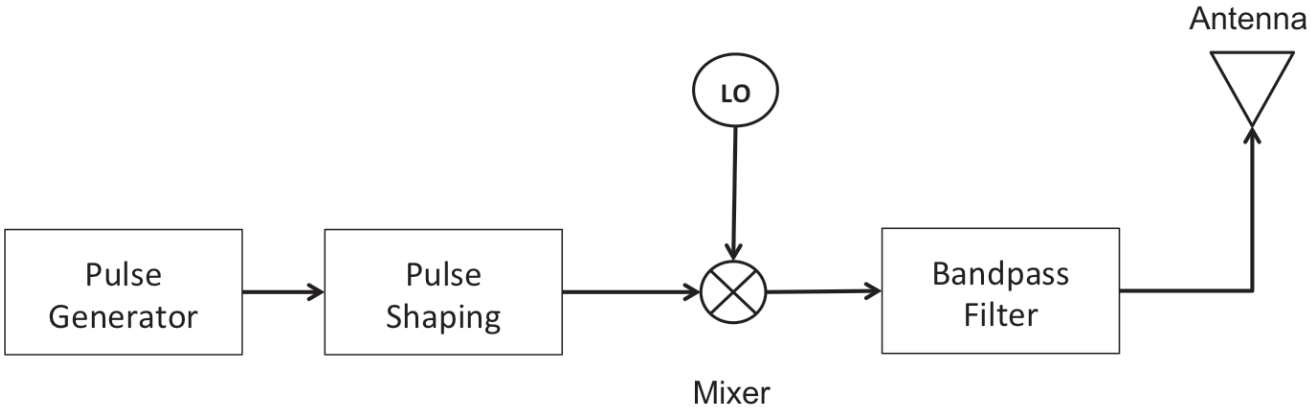

Figure 2: Simplified schematic representation of the carrier-based IR-UWB principle [31]

2.3.3 Direct Sequence UWB (DS-UWB)

DS-UWB is the IR-UWB extension of Direct-Sequence Spread Spectrum (DS-SS). Concretely, DS-UWB generates an ultra wide bandwidth signal by first coding the binary data sequence with a pseudorandom (PN) binary-

valued spreading sequence, and then amplitude modulating a train of short pulses. The bandwidth of the transmitted signal is determined by the rate of the spreading sequence, which is typically much higher than the data symbol rate. In traditional DS-SS, pulses are of Nyquist type or rectangular in time with a typical width T_c indicated as chip time. In DS-UWB the pulse width is much smaller than the chip interval.

Although in traditional DS-SS systems the base-band signal amplitude or phase modulates a carrier frequency to bring the resulting signal at RF, this up-shifting operation can be avoided in DS-UWB unless it is specifically requested. Note that a shift in operating frequency can be potentially obtained by pulse shaping.

2.3.4 Multiband UWB

The multiband UWB (MB-UWB) approach divides the UWB spectrum into multiple frequency sub-bands to efficiently exploit the UWB spectrum by eliminating the disadvantages associated with a large front-end processing bandwidth.

This approach leverages the FCC UWB definition that a signal is considered UWB if its bandwidth exceeds 500 MHz [2]. MB-UWB splits the overall 7.5-GHz UWB bandwidth under the FCC ruling into smaller frequency bands of at least 500 MHz each. Data transmission for a given user occurs on different sub-bands in different periods of time.

Different types of modulation can be adopted for data modulation within each sub-band. The most popular approach is based on the Orthogonal Frequency Division Multiplexing (OFDM) concept and is known as Multiband OFDM.

The MB-OFDM approach was originally proposed as an alternative physical layer for the IEEE 802.15.3a standard. Finally, it was adopted in the ECMA-368/ (WiMedia Alliance) specification and approved as ETSI and ISO/IEC standard.

MB-OFDM divides the whole available UWB spectrum between 3.1 - 10.6 GHz into sub-bands of 528 MHz each, resulting in 14 sub-bands assigned into five different groups. Band Groups 1 to 4 contain three sub-bands while BG#5 has 2 sub-bands. In each sub-band a conventional OFDM modulated signal with N=128 sub-carriers spaced 4.125 MHz apart and QPSK modulation is used. Figure 3 gives an explicit description of the WiMedia frequency plan including the additional overlapping band group BG#6.

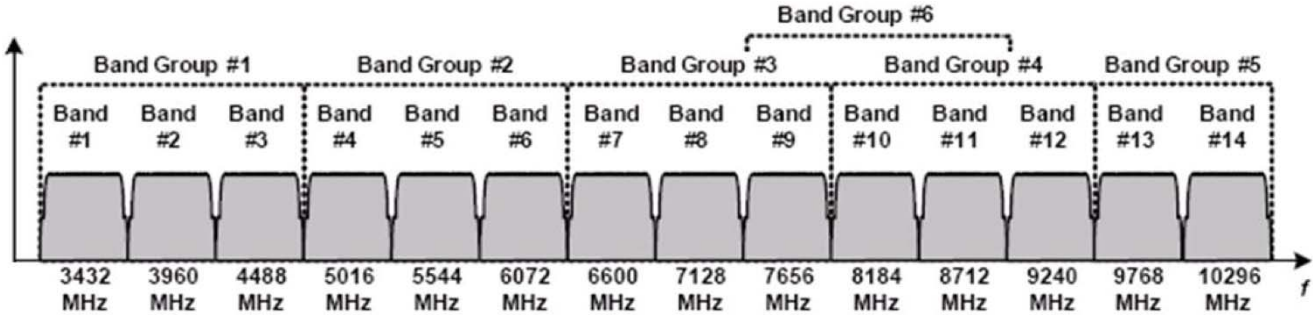

Figure 3: Band planning for the MB-OFDM system [32]

Each device uses only one sub-band group and a Time-Frequency Code (TFC). In any time slot, an OFDM symbol is transmitted in one of the sub-bands. The system hops according to a given TFC to another sub-band within the group to transmit next symbols.

2.3.5 Non-conventional Carrier-based UWB

2.3.5.1 Frequency Hopping UWB (FH-UWB)

The principle of a (stepped-) frequency hopping UWB waveform is to transmit fixed frequency hops across a very broad frequency band. In fact, different carrier frequencies are used at successive time intervals according to a user-specific spreading code. Pseudo-random and/or deterministic hopping sequences can be used. Narrow-band transmission occurs for a time interval, T_{Dwell}, on carrier frequency f_1, then at frequency f_2, and so on. The dwell time can be chosen to be *i)* smaller than a symbol duration ("fast hopping"), so that each symbol is spread over several carrier frequencies, *ii)* larger than a symbol duration ("slow hopping"), so that several adjacent symbols are transmitted on the same carrier frequency, or *iii)* equal to the symbol duration.

Note that not the data rate but the range of the hopping frequencies determines the total bandwidth occupied by a FH-UWB signal [10].

2.3.5.2 Stepped Frequency Hopping UWB

Stepped frequency hopping UWB is a special case of FH-UWB, where the spreading code selects the frequency slot(s) so as to increase the carrier frequency linearly in discrete steps until the desired bandwidth is covered (see Figure 4). Then, the frequency is reset to the start frequency, and the process is repeated. t_{ss} is the time used to collect one trace, and t_r is the reset time between traces. t_{Ms} is the time that it takes to record one measurement.

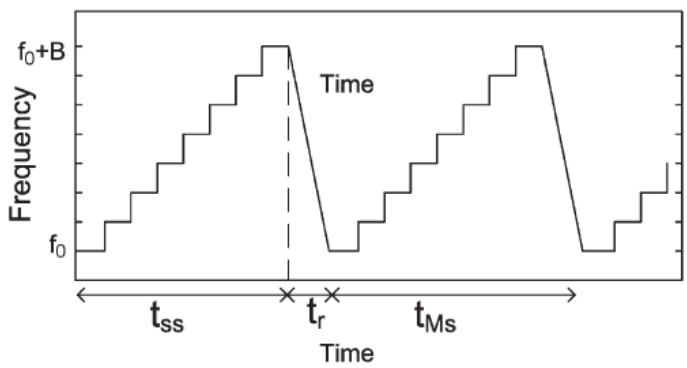

Figure 4: Step frequency waveform, [33]

2.3.5.3 Swept Frequency UWB – Chirp Signalling

Swept frequency UWB or chirp signalling is a variation of FH-UWB where the carrier frequency changes continuously. The main idea is to create an UWB signal by changing at a variable speed the working frequency of a voltage controlled oscillator (VCO).

UWB-CSS (chirp spread spectrum) was defined in the IEEE 802.15.4a standard. The CSS waveform is authorised in the 2.45-GHz ISM band with 80 MHz of bandwidth and a maximum transmit power of 100 mW. The data to be transmitted are modulated on the slope (the chirp) according to a differentially bi-orthogonal M-ary modulation. The chirps can be sent sequentially, but can also be superimposed due to the orthogonal properties of the successive slopes in order to increase aggregate rates.

Chirp signals are non-stationary. For such signals, the notion of frequency loses its effectiveness. For these signals the concept of instantaneous frequency is more adequate.

2.4 Conclusions

The extent of the occupied bandwidth is the essential feature that distinguishes UWB from conventional systems/signals. In fact, the definition of UWB is currently restricted under all worldwide regulations to constraints on minimum signal bandwidth.

Although not explicitly mentioned, bandwidth regulation constraints apply to the Fourier bandwidth of the UWB signal, which by definition includes the effects of spectrum spreading.

UWB is not restricted to the popular impulse radio (IR) systems that instantaneously cover a large frequency band. Today, many other techniques are used to achieve ultra wideband systems/signals. Note that spectrum spreading is inherent to some of these UWB signal generation techniques, for instance FH-UWB and DS-UWB.

In order to further encourage the development and deployment of UWB technology worldwide, it is beneficial that UWB definitions are consistent with each other and embrace all possible signal generation techniques. For this reason and for the sake of technology neutrality, radio regulations have the task to take care that they are not precluding the development of particular UWB signal generation techniques.

3 Current Status of Worldwide UWB Regulation

3.1 Introduction

Radio regulation for UWB devices represents when compared with the one for conventional wireless technologies a special case. This is because UWB technology shares frequency bands that are actually intended for other (narrow-band) radio services. Considering that many operators have paid huge sums for exclusive licenses it becomes clear that the UWB regulatory process entails a lot of discussion.

Products using UWB technology as described in this white paper belong to the license-exempt short-range device (SRD) category. As such they may be used on a '*non-interference, non-protected basis*', meaning that the UWB equipment must not cause harmful interference to any other authorized services and that no protection will be given from harmful interference received from other authorized services.

Main goal of UWB regulation across the world is to set the definitions of UWB, to define emission limits on UWB devices in order to minimize potential interference to licensed services, as well as to point out appropriate measurement and certification procedures needed to enable the deployment of UWB technology.

3.2 UWB Regulation in USA

The US Federal Communications Commission FCC published in 2002 the world's first radio regulatory requirements for UWB devices amending part 15 of its rules to permit marketing and the unlicensed operation of products incorporating UWB technology [11].

In addition to general provisions, *The First Report and Order* ("*First R&O*") [11] specifically distinguished between the following different categories of UWB devices and adopted for each category special rules:

- Indoor UWB systems
- Handheld UWB systems
- Ground penetrating radars and wall imaging systems
- Through-wall imaging systems
- Surveillance systems
- Medical imaging systems
- Vehicular radar systems

3.2.1 Minimum Bandwidth Requirement

The FCC defines an *UWB transmitter* as "*an intentional radiator that, at any point in time, has a fractional bandwidth equal to or greater than 0.20 or has a UWB bandwidth equal to or greater than 500 MHz, regardless of the fractional bandwidth*" (47 C.F.R. § 15.503 (d), [2]). The *UWB bandwidth* is defined as the 10-dB Power-Level bandwidth.

With this definition FCC introduced a minimum bandwidth requirement for the UWB transmitter "at any point of time" during its operation.

3.2.2 Emission Limits

Emission limits on UWB devices are proposed in order to minimize potential interference to licensed services. For each category of UWB devices the Commission defines specific emission limits (47 C.F.R. § 15.509 through §15.519, [2]).

As an example we illustrate here the radiated emission limits for indoor UWB devices (47 C.F.R. §15.417, [2]). Table 1 depicts the maximum mean power spectral density (e.i.r.p) when measured using a resolution bandwidth of 1 MHz.

Frequency range [MHz]	Maximum mean power spectral density e.i.r.p im dBm/MHz
960 – 1610	-75.3
1610-1990	-53.3
1990-3100	-51.3
3100-10600	-41.3
Above 10600	-51.3

Table 1: Emission limits for indoor UWB devices (47 C.F.R. §15.517, [2])

In addition to the radiated emission limits specified in Table 1 and in order to guarantee interference immunity for GPS-based applications, UWB indoor transmitters shall not exceed in the frequency bands 1164-1240 MHz and 1559-1610 MHz average power spectral densities of -85.3 dBm/MHz.

Further, for all device categories there is a limit of 0 dBm on the peak level of the radiated emissions contained within a 50 MHz bandwidth centred on the frequency at which the highest radiated emission occurs.

3.3 UWB Regulation in Europe

In contrast to the US, regulation for generic UWB devices in Europe was delayed. The first European Commission's decision was adopted in March 2006, ECC/DEC/(06)04 [3]. This ECC Decision was primarily intended to respond to the market demand for UWB indoor and handheld devices providing communication applications. Some categories of UWB devices characterized by predominantly outdoor usage (i.e. fixed outdoor installations, installations in road and rail vehicles, in flying models, aircraft and other aviation) were however explicitly excluded.

Decision ECC/DEC/(06)04 [3] was amended in July 2007 (2007/131/EC) [16] after the European Commission (EC) granted the European Conference of Postal and Telecommunications Administrations (CEPT) several mandates to perform technical studies related to the harmonization of UWB spectrum in the European Union. Decision (2007/131/EC) targeted the frequency range between 1600 and 10600 MHz defining maximum mean EIRP transmission power densities (per MHz) and maximum peak EIRP[1] transmit power densities. Thereby, the EC decision distinguished between devices with mitigation techniques – e.g. Low Duty Cycle (LDC), Detect-And-Avoid (DAA) – and such without. Particularly, Decision ECC/DEC/(06)12 [15] provided supplementary regulatory provisions to Decision ECC/DEC/(06)04 [3] for UWB devices using mitigation techniques (LDC, DAA).

The EC is aware that regulation has to follow up changes in UWB technology and in the use of radio spectrum, thus the Commission has issued since 2007 several additional mandates to CEPT in order to amend Decision EC/DEC/(06)04 [3] accordingly.

[1] *Peak level of transmission contained within a 50 MHz bandwidth centred on the frequency at which the highest mean radiated power occurs.*

For instance, Decisions ECC/DEC/(06)04 [3] and ECC/DEC/(06)12 [15] were merged as part of the review of the generic UWB regulation in 2010/2011 resulting in the amended ECC/DEC/(06)04 [3]. Later, in May 2012 the Commission issued a fifth Mandate to the CEPT. As response the CEPT submitted CEPT Report 45 [17] taking into account the description of mitigation techniques with all the relevant detailed parameters within the relevant European standards adopted under Directive 1999/5/EC and developed by the ETSI [18, 19, 20, 21]. CEPT Report 45 clarifies the technical conditions under which specific mitigation techniques enable UWB devices to be operated with higher transmission powers than mentioned in Commission Decision 2007/131/EC, while offering equivalent protection for existing UWB limits on generic use, automotive and railway vehicles, and location-tracking equipment.

The latest amendment of Decision ECC/DEC/(06)04 [3] is labelled as Decision 2014/702/EU [14] and includes following UWB device categories:

- Generic UWB use
- Location tracking systems
- UWB devices installed in road and rail vehicles
- UWB on-board aircraft
- Material sensing devices
- Building material analysis devices (BMA)

3.3.1 Minimum Bandwidth Requirement

Decision 2007/131/EC (article 2, point 1) defines '*Equipment using ultra-wideband technology*' as "equipment incorporating, as an integral part or as an accessory, technology for short-range radio communication, involving the intentional generation and transmission of radio-frequency energy that spreads over a frequency range wider than 50 MHz, which may overlap several frequency bands allocated to radio communication services".

3.3.2 Emission Limits

ECC Decision 2014/702/EU adopts for each UWB device category special emission limits. As an example, Figure 5 shows the technical requirements for generic UWB usage according to recent Decision 2014/702/EU [15].

3.4 Conclusions

When comparing the US and European regulation one finds out an interesting difference regarding the formal definition of the term "ultra-wideband". While the FCC defined as characteristic for "UWB" devices a minimum bandwidth of 500 MHz, or a relative bandwidth of at least 20% at any point in time, the European Commission considers devices with a minimum bandwidth of only 50 MHz already as UWB devices. A specific requirement on the time that the UWB emission has to occupy the minimum bandwidth requirement is not present in the European regulation.

In fact the FCC requirement "*at any point in time*" is not clear from a measurement point of view. If strictly applied, "*at any point in time*" could be interpreted as "at any measured sample", providing the challenge that one cannot define the bandwidth of a sample. A measurement procedure has to practically consider an observation (averaging) time in order to be able to capture all relevant spectral components of the signal under study, i.e. its Fourier Bandwidth as defined in section 2.2.

GENERIC UWB USAGE

Technical requirements		
Frequency range	Maximum mean power spectral density (e.i.r.p)	Maximum peak power (e.i.r.p) (defined in 50 MHz)
f ≤ 1,6 GHz	– 90 dBm/MHz	– 50 dBm
1,6 < f ≤ 2,7 GHz	– 85 dBm/MHz	– 45 dBm
2,7 < f ≤ 3,1 GHz	– 70 dBm/MHz	– 36 dBm
3,1 < f ≤ 3,4 GHz	– 70 dBm/MHz or – 41,3 dBm/MHz using LDC (1) or DAA (2)	– 36 dBm or 0 dBm
3,4 < f ≤ 3,8 GHz	– 80 dBm/MHz or – 41,3 dBm/MHz using LDC (1) or DAA (2)	– 40 dBm or 0 dBm
3,8 < f ≤ 4,8 GHz	– 70 dBm/MHz or – 41,3 dBm/MHz using LDC (1) or DAA (2)	– 30 dBm or 0 dBm
4,8 < f ≤ 6 GHz	– 70 dBm/MHz	– 30 dBm
6 < f ≤ 8,5 GHz	– 41,3 dBm/MHz	0 dBm
8,5 < f ≤ 9 GHz	– 65 dBm/MHz or – 41,3 dBm/MHz using DAA (2)	– 25 dBm or 0 dBm
9 < f ≤ 10,6 GHz	– 65 dBm/MHz	– 25 dBm
f > 10,6 GHz	– 85 dBm/MHz	– 45 dBm

(1) Within the band 3,1 GHz to 4,8 GHz, The Low Duty Cycle mitigation technique and its limits are defined in ETSI Standard EN 302 065-1.
(2) Within the band 3,1 GHz to 4,8 GHz and 8,5G Hz to 9 GHz. The Detect and Avoid mitigation technique and its limits are defined in ETSI Standard EN 302 065-1.

Figure 5: Technical requirements for generic UWB usage extracted from [15]

Even without willing to carry the definition that far, the requirement "*at any point in time*" in combination with the requirement that the UWB signal has to be measured with and without modulation [11] definitely exacerbates compliance for some unconventional signal generation techniques such as frequency hopping, frequency swept and frequency stepped UWB.

FCC is aware of this situation and recognized it explicitly already in its "*1stR&O*" at para. 32 [11].

Actually, the minimum bandwidth requirement has been subject of extensive discussion within the FCC. The Commission even proposed in its "2nd R&O" [12] to eliminate the definition of an UWB transmitter in 47 C.F.R. § 15.503 (d) [2]. Several comments were received and debated. Finally, the Commission decided to stick to the definition and deferred changes until additional experience has been gained regarding interference potential. However, the Commission formally recognized that it is *the limit on emissions levels, particularly on spectral power density, that primarily controls interference and not whether the minimum bandwidth is met* at all times.

Furthermore, we have observed that the current FCC regulation framework is unnecessarily forcing manufacturers of industrial applications based on unconventional UWB signal generation techniques (e.g. ground penetrating radar, building material analysis or material sensing devices) to individually waiver their products to enter in the US market [23, 24] under the UWB regulation with a considerable delay and administrative barriers.

In the light of these arguments, we consider the 47 C.F.R. § 15.503 (d) is due for review. Either the temporal restriction, "at any point in time" is to be eliminated as in the European regulation or at least it could be concretized and replaced by some practical interpretation such as "at any point in time in its normal operating mode".

Another remarkable difference between the European and the US regulation of UWB is the absence within the FCC regulatory framework of technical considerations regarding interference mitigation techniques such as Detect and Avoid (DAA), Low Duty Cycle (LDC) or Dynamic Frequency Selection (DFS).

In contrast, the European UWB regulation included interference mitigation techniques early in its considerations [15]. The use of appropriate interference mitigation techniques provides UWB equipment under European regulation with additional means to protect incumbent and licensed services so that higher EIRP limits than those established in the absence of additional interference mitigation techniques can be used.

4 Test Methods and Certification Procedures

4.1 Introduction

Regulatory authorities require devices which are subject to UWB regulation to be tested in order to demonstrate compliance with radio regulatory requirements before they can be introduced into the market. Regarding UWB devices, national regulatory authorities state requirements, and test and measurement procedures for testing conformance.

In this section we provide an overview of different measurement procedures for testing regulatory conformance of UWB devices, as defined by the national regulatory authorities in Europe and USA.

We focus on the measurement procedures targeting emission limits conformance. It is of common understanding that the *limit on emission levels*, particularly on spectral power density, is the one that *primarily controls the interference potential*.

4.2 Situation in USA

In Appendix F of its First R&O [11], FCC provided first general measurement procedures for compliance with UWB regulations. For historical reasons, those procedures seem to target only impulse-generated UWB signals. In fact, FCC recognized in [11] that the established measurement procedures do not address transmitters – UWB or otherwise – employing stepped frequency, frequency hopping, or swept frequency transmissions.

Further, FCC clearly states in [11] that the measurement procedures were based on its current understanding of UWB technology and that modifications may be necessary as measurement experience is gained.

On December 17, 2014 FCC adopted a Report and Order (FCC 14-208) [26] as part of an on-going review ad update of the rules regarding authorization of radiofrequency equipment. The order [26], released on Dec 30, 2014, incorporates a reference to IEEE/ANSI C63.10-2013 [22] into the rules as the measurement procedures for determining the compliance of intentional unlicensed radiators with FCC regulations.

The IEEE/ANSI C63.10-2013 standard provides test methods for determining compliance with regulatory requirements for many types of unlicensed wireless devices including UWB devices. In general, the IEEE/ANSI C63.10-2013 standard recognizes that both spectrum analysers and electromagnetic interference (EMI) receivers can be used for making emission measurements.

For testing ultra-wideband systems the standard states, as a general consideration, that a spectrum analyser with a power average detector shall be used. The spectrum analyser should provide means to record, store, and display the RMS values across the desired band of operation. As well, the analyser bin size shall not exceed the measurement bandwidth[2].

Further, the standard provides specific test methods for UWB devices regarding the evaluation of the bandwidth of a UWB emission and the measurement of radiated emissions, respectively.

For the measurement of radiated emissions the standard distinguishes between emissions below and above 960 MHz. The procedures for measuring emissions below 960 MHz are not in the scope of this white paper.

[2] *In common spectrum analyzers this is generally referred as the resolution bandwidth.*

Above 960 MHz, the emission limits for UWB devices are specified in terms of the EIRP relative to the device. For the measurements, two signal detectors are specified: a power averaging (RMS) detector for measuring the average UWB device emissions, and a peak detector for determining the peak power associated with UWB device emissions.

4.2.1 Peak Power Measurement

For the peak power measurement the IEEE/ANSI C63.10-2013 standard [22] states that the peak detector of the measurement receiver shall be selected and the maximum hold feature shall be activated. The resolution bandwidth (RBW) has to be set to 1 MHz and the video Bandwidth (VBW) has to be set to at least 1 MHz (3 MHz is recommended).

Resolution bandwidth:	1 MHz
Video bandwidth:	At least 1 MHz (3 MHz is recommended)
Detector mode	Peak
Display mode	Maximum hold[3]

Table 2: Summary of settings for peak power measurement [22, clause 10.3.5]

Note that the FCC limits to 0 dBm the peak level of the radiated emissions contained within a 50 MHz bandwidth centred on the frequency at which the highest radiated emission occurs. When performing the peak power measurements with a RBW less than 50 MHz, the peak emissions EIRP limit (0 dBm / 50 MHz) has to be converted to a limit proportionate with the measurement RBW by employing a 20log(RBW/50 MHz) relationship.

4.2.2 RMS-Average Power Spectral Density Measurement

For evaluating RMS-average power spectral density, the following procedure shall be used: Set the RBW to 1 MHz, and the VBW to at least 1 MHz. Then set the frequency span of the measurement receiver to examine the spectrum across a convenient frequency range. Activate the power averaging detector function and set the sweep time so that there is no more than 1 ms integration period over each measurement bin. Thus, the RMS-average power spectral density is the highest integrated power detected within a 1 MHz RBW over a 1ms integration period.

Resolution bandwidth:	1 MHz
Video bandwidth:	At least 1 MHz (3 MHz is desirable)
Detector mode	RMS (power average)
Display mode	-
Average time	Set sweep time so that there is no more than 1ms integration period over each measurement bin.
Frequency span:	Set frequency span to examine the spectrum across a convenient frequency range (e.g. 600 MHz).

Table 3: Summary of settings for RMS-average power spectral density measurement [22, clause 10.3.7]

4.2.3 Note regarding Unconventional UWB Modulation Formats

In its First R&O [11] FCC stated, but did not codify in the rules, that UWB transmitters employing stepped frequency, frequency hopping, or swept frequency transmissions need to be measured with the step, hopping, or sweep function disabled and with the transmitter operating continuously at a fundamental transmission frequency. The recent reference to ANSI C63.10 2013 [22] as the measurement procedures for determining compliance to the rules has not changed in this aspect.

[3] *The maximum hold capability retains the maximum value for each point on the spectrum analyzer display over the selected number of display scans.*

From the outset, FCC was aware of the restrictive character that its measurement procedures have on UWB systems employing frequency hopping, frequency sweep or stepped frequency modulation techniques; making unlikely that those systems can comply with the minimum bandwidth requirement at any point in time. As justification, FCC referred to the lack of pertinent measurement procedures and interference potential studies for those modulation techniques.

However, on March 2005, FCC adopted an *Order* [23] granting a waiver of the measurement procedures to permit emissions from UWB transmitters operating in the 3.1-5.03 GHz and 5.65-10.6 GHz bands that employ frequency hopping or stepped frequency modulation techniques, or that gate the transmitted signals, to be measured with the transmitter operating in its normal transmission mode. In support of its petition for waiver, MBOA-SIG submitted simulated and actual test data demonstrating that the interference potential of frequency hopped or stepped systems, measured in their normal operating modes, is less than that of a UWB transmitter employing pulse modulation (see §9 in [13]). The MBOA-SIG waiver [23] states, following recommendations of the National Telecommunications and Information Administration (NTIA[4]) [25], that the measurement of the peak and average emission levels shall be repeated over multiple sweeps with the analyser set for **maximum hold** until the amplitude stabilizes. This procedure ensures that all relevant spectral components of the signal are included in the measurement of radiated emissions.

4.3 Situation in Europe

The relevant harmonised European standards for UWB devices [18, 19, 20, 21] reference to the test procedures for essential radio test suites specified in ETSI TS 102 883 [27] to show compliance with EC rules.

We present next the measurement procedures for UWB intentional emissions specified in the last published version of the document [27]. However, and when relevant, we also reference to the current working document of the ETSI TS 102 883 [28].

4.3.1 Mean Power Spectral Density Measurement

Primary, ETSI TS 102 883 [27] established following measurement settings for measuring maximum mean power spectral density:

Resolution bandwidth:	1 MHz
Video bandwidth:	No less than the resolution bandwidth
Detector mode	RMS (power average)
Display mode	Maximum hold
Average time	1 ms or less (per sweep point on spectrum analyser scan)
Frequency span:	Equal or less than the number of sweep points multiplied by the resolution bandwidth, preferably less than half as much.

Table 4: Summary of settings for mean power spectral density measurements [27, clause 7.4.3]

This measurement procedure is intended only for pulsed based signals and for those with signal time < 1 ms.

The current working document of ETSI TS 102 883 [28] defines a new measurement procedure for non-pulsed based signals (e.g. stepped frequency, frequency hopping or swept frequency UWB) and in general for UWB signals with duration > 1 ms. In this new measurement procedure, the RBW, VBW, Detector mode and Display mode are the same as those presented in Table 4. The difference concerns the sweep time of the measurement that now should be at least as large as the product of the "*real signal repetition time*" and the "*total measurement bandwidth*" divided by the resolution bandwidth, i.e.

[4] *National Telecommunications and Information Administration (NTIA) regulates the operation of Government radio stations, while the operation of stations by private industry, by state and local governments and by the public is regulated by the FCC.*

$$sweeptime \geq real\ signal\ repetition\ time * total\ measurement\ BW/RBW$$

Note that sweep time refers here to the time required for the spectrum analyser sweep (over one span). The "real signal repetition time" accounts for the UWB signal time, e.g. FMCW ramp time, stepping or hopping sequence, and the "*total measurement BW*" refers to the total occupied BW of the signal or the span of the measurement.

4.3.2 Peak Power Measurement

For all UWB modulations the maximum peak power (EIRP) shall be measured at the frequency of the maximum mean power spectral density.

The spectrum analyser should be configured as follows: (i) the measurement shall be performed over the frequency range defined in the relevant harmonized standard, (ii) the RBW shall be set equal to or greater than 3 MHz but not greater than 50 MHz, so that always the highest available bandwidth for the signal to be measured is selected. When the measurement is performed using a lower bandwidth than 50 MHz then a compensation factor (20log(RBW/50MHz)) shall be used. (iii) the VBW shall be no less than the RBW, (iv) detector in peak mode, (v) use maximum hold as display mode.

Measurements shall be continued with the transmitter emitting the normal test signal until the displayed trace no longer changes.

Resolution bandwidth:	3 MHz ≤ RBW ≤50 MHz
Video bandwidth:	No less than the resolution bandwidth
Detector mode	Peak
Display mode	Maximum hold

Table 5: Summary of settings for peak power measurements [27, clause 7.4.4]

4.4 Conclusions

Preferably, emission levels measurement procedures should provide a realistic representation of the signal characteristics actually produced by any type of UWB device. Therefore, neither the measurement procedure nor the measurement receiver may manipulate the emission levels of the signal under study.

In order to be able to capture all significant spectral components of the signal under study, measurement procedures preferably have to work with the display mode in "maximum hold" and wait during an observation period as long as the signal stabilizes. This is the procedure chosen by ETSI for its UWB test methods. Equivalently, the Canadian regulation [29] and NTIA measurement procedures for UWB frequency hopping radar (Appendix D in [25]) set the detector in maximum hold display mode.

In the USA, measurement procedures developed historically in a way that solely fits and applies to UWB devices using pulsed emissions (IR-UWB). For other unconventional UWB signal generation techniques, such as stepping frequency, frequency hopping or swept frequency, there exist no adequate test methods by FCC or ANSI yet. Beyond, the requirement to disable the step, hopping or sweep function during the measurements (see 1st R&O, [11] supra, at para. 32) makes unlikely that those systems can even be considered as UWB systems since they cannot comply with the minimum bandwidth requirement at any point in time unless an extremely wide bandwidth hopping/stepping channel is used.

Most notably at this point is that the FCC emission measurement procedures actively undermine the technical neutrality FCC intended to establish when adopting its UWB regulations in 2002.

In this context and subsequent to the adoption of the UWB regulation several petitions for reconsideration followed. Finally, in 2005 a first waiver on the UWB measurement procedures was granted [23] to the MBOA-SIG permitting the emissions from UWB transmitters that employ frequency hopping, or stepped frequency modulation techniques, or that gate the transmitted signal, to be measured with the transmitter in its normal transmission mode. In that waiver the MBOA-SIG demonstrated that the interference potential of frequency hopped, stepped or sequenced systems, measured in their normal operating modes, is less than that of a UWB transmitter employing impulse modulation. FCC concluded that "*any requirement to stop the frequency hop or band sequencing or system gating serves only to add another unnecessary level of conservatism to already stringent UWB standards*".

Furthermore, in its Third R&O [13] FCC recognized that the effect of the MBOA-Waiver [22] has been to provide a more realistic representation of the signal level actually produced by the UWB devices. A second waiver regarding the emission measurement procedure for stepped frequency 3D radar was granted to Curtiss-Wright Controls Inc in 2012 [24]. Again, in [24] FCC waived the requirement in 47 C.F.R. §15.521(d) that enforces the emissions from the 3D radar device to be measured with the transmitter operating with the stepping function stopped.

The MBOA-SIG waiver [23] acts on the emission measurement procedures regarding the emission limits but not the minimum bandwidth requirement. In contrast, the Curtiss-Wright Waiver [24] acts both on the emission measurement procedures and on the minimum operational bandwidth of an UWB transmitter in 47 C.F.R. §15.503(d).

Thus, the question that arises is why did the FCC so far limit its actions to granting waivers and does not it definitely act on the rules on measurement procedures.

In Europe the situation is different. ETSI is working on a specific measurement procedure for the mean power spectral density of non-pulsed based signals (e.g. stepped frequency, frequency hopping or swept frequency UWB). Furthermore, ETSI test methods always set the display mode in "maximum hold" and wait as long as the signal stabilizes, so that all relevant spectral components of the signal can be captured in the measurement.

5 Summary and Recommendations

The FCC recognized in its *Second R&O* and *Second MO&O* [12] that the interference potential of UWB device to other services is primary controlled only by *limits on emission levels*, particularly on spectral power density. Therefore, for general interference protection the compliance with the regulatory emission mask and the corresponding measurement procedures are relevant, and not the signal generation process of the technology.

In support of its petition for waiver, MBOA-SIG submitted simulated and actual test data demonstrating that the interference potential of frequency hopped or stepped systems, measured in their normal operating modes, is less than that of a UWB transmitter employing pulse modulation (see §9 in [13]).

This is also intuitively clear as pulsed based UWB emissions occupy usually a larger bandwidth than the instantaneous bandwidth occupied by frequency hopped, sweeped or stepped systems. Frequency hopping, stepped frequency and gated transmissions have relatively similar interference profiles. Furthermore, one can consider that frequency hopping, frequency sweep and frequency step technologies can be more easily combined with interference mitigation techniques like Detect-And-Avoid (DAA) and Dynamic Frequency Selection (DFS) to account for victim receivers. Nevertheless, such techniques add complexity to the device that can be prohibitive in some applications. In some cases a pre-defined blacklisting of frequencies might be considered as sufficient.

NTIA's technical analyses of the MBOA-SIG waiver clearly demonstrated that the average power of the transmitted signal, not its instantaneous power such as would be measured in a static mode, was the appropriate basis for determining interference potential. Further, this reasoned analysis by the Commission allowed for continued technology-neutral treatment of various UWB design formats without undermining the policy which the rule is intended to serve, i.e., the prevention of harmful interference to the authorized radio services.

Comparing UWB regulations in Europe and US, we noticed that the FCC interference protection approach relies on conservative limits, minimum bandwidth requirement at any point in time and granting waivers to account for technology and market trends, while the European approach relies on conservative limits combined with mitigation techniques (DAA, LDC, Transmit Power Control).

In summary, we consider FCC's current definition of UWB transmitter as being nowadays out-dated and preclusive for the development and market introduction of products based on UWB technology with non-conventional signal generation. It should be of common interest that the rulemaking by FCC is revised in such a way that it is technology-neutral in its requirements and its test and measurement procedures.

We therefore recommend

- to drop the "at any point of time" requirement on the minimum bandwidth, as it is not relevant for interference protection which is the main target of radio regulations,
- to drop any requirement forcing measurements and tests to be done with modulations switched off, as only the normal operation provides a realistic view on the emissions.
- to consider approaches already taken by CEPT and ETSI to improve test and measurement procedures in a technology-neutral way.

6 Appendix

6.1 UWB Interference Avoidance Techniques

Pursuant to Directive 1999/5/EC the Commission has given mandate M/407 to the ETSI to draw up a set of harmonised standards. In response to M/407 ETSI has developed the harmonised standards: EN 302 065-1 on common technical requirements for short-range devices using UWB, EN 302 065-2 on requirements for UWB location tracking and EN 302 065-3 on requirements for UWB devices for road and rail vehicles.

The relevant harmonised standards adopted under Directive 1999/5/EC describe following interference mitigation techniques:

- Detect and Avoid (DAA) mitigation
- Low duty cycle (LDC) mitigation
- Dynamic Frequency Selection (DFS)

The use of mitigation techniques is advisable in the case of UWB communications. Even for location/tracking applications mitigation techniques could be applied. However, in the case of UWB sensor/radar applications most of the interference mitigation techniques are not adequate. Particularly for sensor applications related to personal integrity/security we have to reject the use of dynamic agile interference avoidance techniques like Lister Before Talk, DAA and dynamic black listing. For this kind of applications it is however conceivable to apply static black listing, for instance statically and permanently avoid some bands (e.g. GPS).

6.1.1 Detect and Avoid Mitigation

The Detect and Avoid (DAA) mechanism is an active mitigation technique for the protection of sensitive potential victim systems in the vicinity of the UWB device based on a sensing approach including an active reduction of the interference potential if required.

The Detect and Avoid (DAA) mitigation technique and its limits are defined in ETSI Standard EN 302 065-1 [18].

6.1.2 Low Duty Cycle Mitigation

The Low Duty Cycle (LDC) mitigation technique and its limits are defined in ETSI Standard EN 302 065-1 [18].

LDC restriction provides that the sum of all transmitted signals is less than 5% of the time each second and less than 0,5% of the time each hour, and that each transmitted signal does not exceed 5ms.

6.1.3 Transmit Power Control (TPC)

Transmit Power Control (TPC) is a mechanism to be used to ensure an interference mitigation on the aggregate power from a large number of radio devices. The TPC mechanism shall provide the full range from the highest to the lowest power level of the radio device.

6.1.4 Black Listing

Black listing is a method to avoid congested channels or to facilitate protection of incumbents.

7 References

[1]	Rakhesh S. Kshetrimayum: “An introduction to UWB communication systems”, IEEE Potentials, March/April 2009, pp. 9–13.
[2]	Code of Federal Regulations (CFR), Part 15 – Radio Frequency Devices, Subpart F - Ultra-Wideband Operation.
[3]	ECC Decision (06)04 - The harmonised conditions for devices using Ultra-Wideband (UWB) technology in bands below 10.6 GHz
[4]	OSD/DARPA, Ultra-Wideband Radar Review Panel, “Assessment of Ultra-Wideband (UWB) Technology”, Arlington, VA, Defense Advanced Research Project Agency (DARPA), 1990.
[5]	F. Sabath, E.L. Mokole, S.N. Samaddar, “Definition and Classification of Ultra-Wideband Signals and Devices”, the Radio Science Bulletin, No. 313, June 2005
[6]	C. E. Shannon, "Communication in the Presence of Noise," Proc. IRE, vol. 37, pp. 10-21, Jan. 1949
[7]	J.L. Massey, „Towards an Information Theory of Spread Spectrum Systems“, Code Division Multiple Access Communications, Boston, Dordrecht and London: Kluwer, 1995, pp. 29-46.
[8]	ECC Recommendation (06)01, May 2006
[9]	N. Kumar and R. M. Buehrer, The ultra wideband WiMedia standard [Standards in a Nutshell],[IEEE Signal Process. Mag., vol. 25, no. 5, pp. 115Y119, 2008.
[10]	Win, M.Z.; Dardari, D.; Molisch, A.F.; Wiesbeck, W.; Jinyun Zhang, "History and Applications of UWB" Proceedings of the IEEE, vol.97, no.2, pp.198,204, Feb. 2009
[11]	Revision of Part 15 of the Commission’s Rules Regarding Ultra-Wideband Transmission Systems, First Report and Order, (First R&O), FCC ET Docket 98-153, Apr. 22, 2002
[12]	Second Report and Order and Second Memorandum Opinion and Order (2nd R&O, 2nd MO&O), FCC 04-285, Dec. 2004.
[13]	Third Memorandum Opinion and Order (3rd MO&O), FCC 10-151, August 2010
[14]	Commission Decision 2014/702/EU of 7 October 2014 amending Decision 2007/131/EC on allowing the use of the radio spectrum for equipment using ultra-wideband technology in a harmonised manner in the Community
[15]	ECC Decision (06)12 on supplementary regulatory provisions to Decision ECC/DEC/(06)04 for UWB devices using mitigation techniques
[16]	Commission Decision 2007/131/EC of 21 February 2007 on allowing the use of the radio spectrum for equipment using ultra-wideband technology in a harmonised manner in the Community (OJ L 55, 23.2.2007, p. 33).
[17]	CEPT Report 45 - Report from CEPT to the European Commission in response to the Fifth Mandate to CEPT on ultra-wideband technology to clarify the technical parameters in view of a potential update of Commission Decision 2007/131/EC, June 2013.
[18]	EN 302 065-1 Electromagnetic compatibility and Radio spectrum Matters (ERM);Short Range Devices (SRD) using Ultra Wide Band technology (UWB); Harmonized EN covering the essential requirements of article 3.2 of the R&TTE Directive; Part 1: Requirements for Generic UWB Applications

[19]	EN 302 065-2 Electromagnetic compatibility and Radio spectrum Matters (ERM);Short Range Devices (SRD) using Ultra Wide Band technology (UWB); Harmonized EN covering the essential requirements of article 3.2 of the R&TTE Directive; Part 2: Requirements for UWB location tracking
[20]	EN 302 065-3 Electromagnetic compatibility and Radio spectrum Matters (ERM);Short Range Devices (SRD) using Ultra Wide Band technology (UWB); Harmonized EN covering the essential requirements of article 3.2 of the R&TTE Directive; Part 3: Requirements for UWB devices for road and rail vehicles
[21]	EN 302 065-4 Electromagnetic compatibility and Radio spectrum Matters (ERM);Short Range Devices (SRD) using Ultra Wide Band technology (UWB); Harmonized EN covering the essential requirements of article 3.2 of the R&TTE Directive; Part 4: Material sensing devices using UWB technology
[22]	IEEE/ANSI C63.10-2013, American National Standard of Procedures for Compliance Testing of Unlicensed Wireless Devices
[23]	Petition of Waiver OFDM UWB Measurement Procedures, ET Docket No. 04-352, DA 04-2793
[24]	Waiver of Bandwidth Requirement for Stepped Frequency GPR, Curtiss-Wright Controls Inc. Waiver, ET Docket No. 10-167
[25]	NTIA Comments of 12/10/04 in ET Docket No. 98-153 at Enclosure B.
[26]	Report and Order, FCC 14-208 in ET Docket No. 13-44
[27]	ETSI TS 102 883 V1.1.1 (2012-08); Electromagnetic compatibility and Radio spectrum Matters (ERM); Short Range Devices (SRD) using Ultra Wide Band (UWB); Measurement Techniques
[28]	ETSI TS 102 883 V1.2.1_0.0.3 (2014-10); Electromagnetic compatibility and Radio spectrum Matters (ERM); Short Range Devices (SRD) using Ultra Wide Band (UWB); Measurement Techniques
[29]	RSS-220, Issue 1, Devices Using Ultra-Wideband (UWB) Technology, March 2009.
[30]	G. Schmid, G. Neubauer, Bestimmung der Exposition durch Ultra-Wideband Technologien; Teil 1; ARC-IT-0212, Juli 2007
[31]	Weiwei Wu et.al., “Carrier-less, single and multi-carrier UWB radio technology,” Joint UWBST & IWUWBS. 2004 International Workshop on , vol., no., pp.192,196, 18-21 May 2004
[32]	Ultra-Wideband: Past, Present and Future, White Paper, EUWB Consortium, June 2011
[33]	Oyan, M.J.; et. al., "Ultrawideband Gated Step Frequency Ground-Penetrating Radar," Geoscience and Remote Sensing, IEEE Transactions on , vol.50, no.1, pp.212,220, Jan. 2012

8 Acronyms & Abbreviations

BMA	Building Material Analysis
BPSK	Binary Phase Shift Keying
CDMA	Code Division Multiple Access
CEN	European Committee for Standardization
CENELEC	European Committee for Electrotechnical Standardization
CEPT	European Conference on Postal and Telecommunications Administrations
DAA	Detect and Avoid
EC	European Commission
ECC	Electronic Communications Committee
ECO	European Communications Office
EIRP	Equivalent/Effective Isotropically Radiated Power
EMC	Electromagnetic Compatibility
EN	European Standard
ERM	Electromagnetic compatibility and Radio spectrum Matters
ESO	European Standardization Organisation
ETSI	European Telecommunications Standards Institute
EU	European Union
FCC	Federal Communications Commission
FFT	Fast Fourier Transform
GNSS	Global Navigation Satellite Systems
GPR	Ground Penetrating Radar
HS	Harmonized Standard
IEC	International Electro technical Commission
IEEE	Institute of Electrical and Electronics Engineers
ITU	International Telecommunication Union
LDC	Low Duty Cycle
MBOA-SIG	WiMedia Alliance and MultiBand OFDM Alliance Special Interest Group
MO&O	Memorandum Opinion and Order
NRA	National Regulation Authority
NTIA	National Telecommunications and Information Administration
R&TTE	Radio and Telecommunications Terminal Equipment
RF	Radio Frequency
RBW	Resolution Bandwidth
RMS	Root Mean Square
S&R	Standardization and Regulation
TC	Technical Committee
TG	Task Group
TS	Technical Specification
UWB	Ultra Wideband
VBW	Video Bandwidth
WPR	Wall Penetrating Radar