COVINGTON

BEIJING BRUSSELS LONDON NEW YORK
SAN DIEGO SAN FRANCISCO SEOUL
SHANGHAI SILICON VALLEY WASHINGTON

Gerard J. Waldron

Covington & Burling LLP
One CityCenter
850 Tenth Street, NW
Washington, DC 20001-4956
T +1 202 662 5360
gwaldron@cov.com

July 15, 2015

Ms. Marlene H. Dortch
Secretary
Federal Communications Commission
445 12th Street, S.W.
Washington, D.C. 20554

Re: *Ex parte* presentation in IB Docket No. 12-340; IBFS File Nos. SAT-MOD-20101118-00239; SAT-MOD-20120928-00160; SAT-MOD-20120928-00161; SES-MOD-20121001-00872

Dear Ms. Dortch:

Please find attached a presentation created by Roberson and Associates, a consultant to the undersigned in connection with our representation of LightSquared. This presentation reflects refinements made to the test plan that Roberson and Associates is developing regarding the compatibility of terrestrial broadband and GPS and builds on the concepts discussed in the presentation by Dennis Roberson as reported in an *ex parte* letter of June 24, 2015.

Details of the test plan and the proposed device list continue to be refined and are thus subject to further revision. Mr. Roberson and LightSquared's representatives have consulted on this test plan with other stakeholders, including with officials in other government agencies, and are placing the attached document in the record so that it may be reviewed by all interested parties. The company has made repeated attempts to solicit specific comments and critiques of the plan from various stakeholders. With this letter, we hereby renew the request for such comments and critiques and hope to receive feedback within the next week, since testing is anticipated to begin by the end of this month.

Please direct any questions to the undersigned.

Respectfully submitted,

Gerard J. Waldron

Gerard J. Waldron
Counsel to LightSquared

Attachment

Test Plan Summary
July 13, 2015

LTE Bands and Throughput

	Frequency Band (MHz)	LTE Throughput (simulated)	Notes
Downlink	1526-1536	Max. Throughput	Required
Downlink	1670-1680	Max. Throughput	Required
Downlink	1545-1555	Max. Throughput	Desirable – If Schedule Permits
Uplink*	1627-1637	~ 3.5 Mbps (Streaming Video)	Required
Uplink*	1647-1657	~ 3.5 Mbps (Streaming Video)	Required

* Using actual LTE SC-FDMA uplink signals allocated among subset of resource blocks

GPS Signal Constellations

GPS Test conditions

- **Fixed position**
- **Clear for all devices categories**
- **Stressed, e.g., urban canyon for general nav, cellphones**

Include all GPS systematic error sources (shown below)

Segment Source	Error Source	1σ Error (m)
Space/control	Broadcast clock	1.1
	L1 P(Y) – L1 C/A group delay	0.3
	Broadcast ephemeris	0.8
User	Ionospheric delay	7.0
	Tropospheric delay	0.2
	Receiver noise and resolution	0.1
	Multipath	0.2
System UERE	Total (RSS)	7.1

Device List

Aviation (certified)
Avidyne IFD 540
Garmin GTN 625
Aviation (non-certified)
Garmin GPSMAP 695
Cellular
Apple iPhone 5s
Apple iPhone 6
Samsung Galaxy S5
Samsung Galaxy S6
General location and navigation
Alpine In-Dash X008U
Bosh In-Dash (NissanModel295159CJ0A)
Garmin eTrex H
Garmin GPSMAP 76 CSx
Garmin Nuvi 2495LMT
Garmin Nuvi 2597LMT
Garmin Nuvi 55LM
Garmin/Panasonic Uconnect 8.4N RB5
Harman Toyota Entune (e.g., 8600-04080 for 2014/2015 Toyota
Motorola APX 7000
Motorola MW810
Pioneer AVIC-X930BT In Dash Navigation
TomTom Go 50S/60S
TomTom VIA 1515M

High precision
Deere RTK 450
Deere Starfire 3000 (0907PC, 1010, 2010 and 7800)
NAVCOM SF-3050
NovAtel Smart6 or Smart6-L
Topcon SGR-1
Topcon System 310
Trimble Geo 7x
Trimble 5800
Trimble AgGPS 542
Trimble Net R9
Trimble R8
Trimble SPS985 Antenna, SPS855 GNSS Receiver
Trimble TM3000
Timing
Arbiter 1088B GPS Satellite Clock (40ns)
Symmetricom 58540A

Antennas

The timing and high precision categories use external antennas. Performance with Standard and "Interference Resilient" antennas will be compared.

Vendor	Class	Model
Avidyne	Aviation	
Novatel	Precision / Marine	GPS-713-GGG-N
PCTel	Mobile	3915D-HR
PCTel	Mobile	8171D-HR
PCTel	Timing	GPS-TMG-HR-26N
JAVAD	High Precision	

KPI Measurement Schematic, Radiated

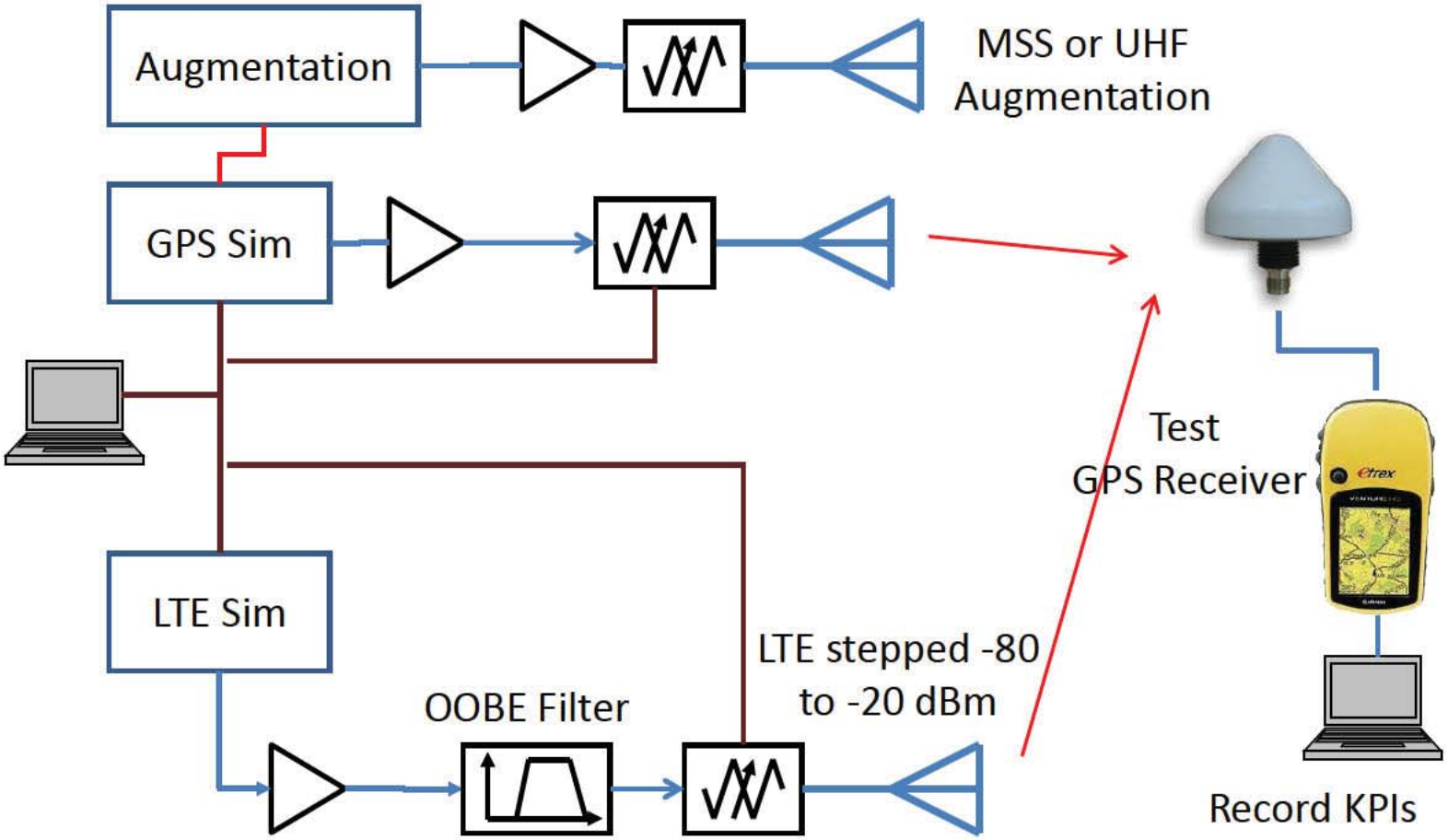

KPI Measurement, Cell Phones

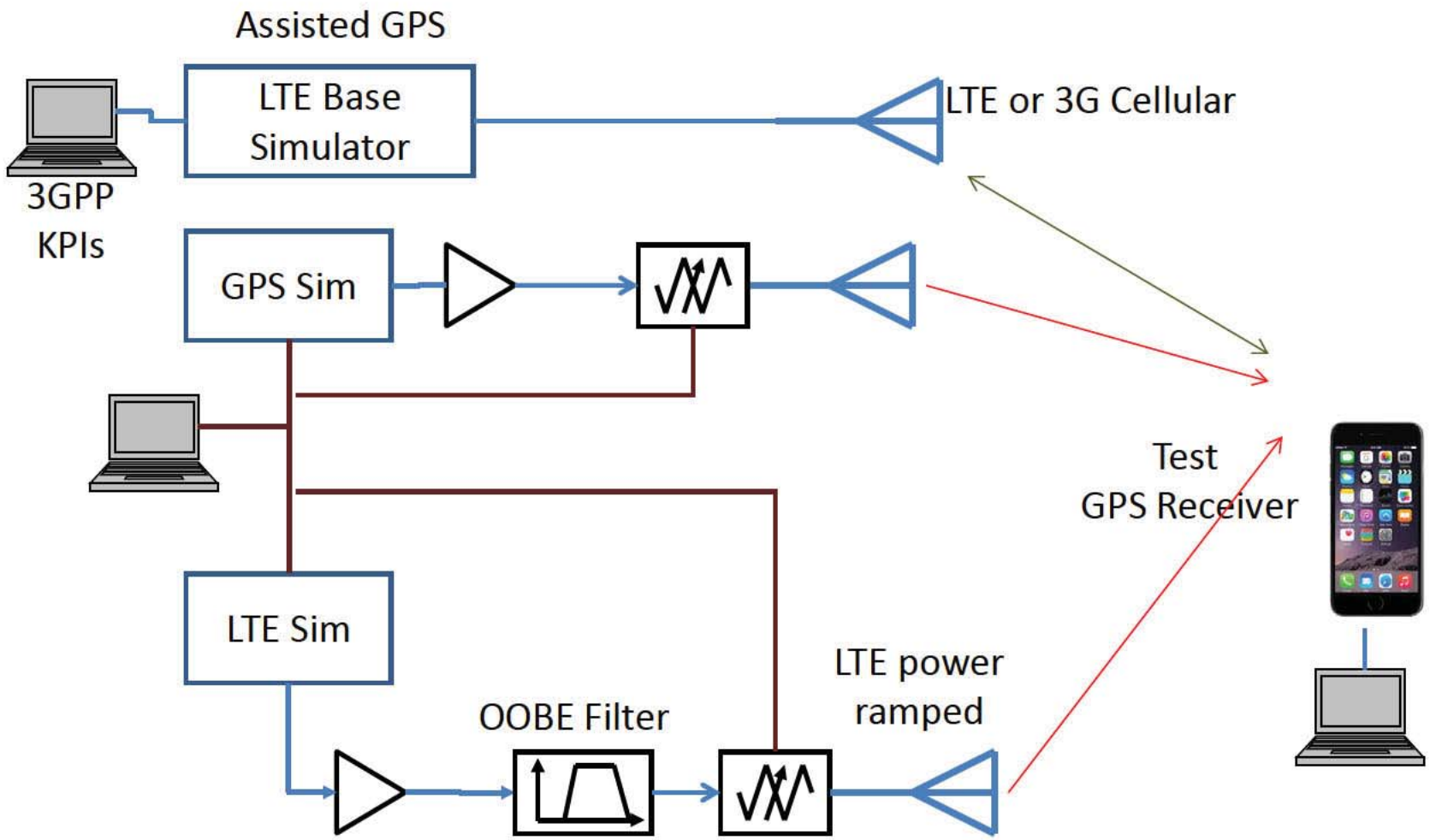

Basic Measurement Sequence

Roberson and Associates, LLC
Technology and Management Consultants

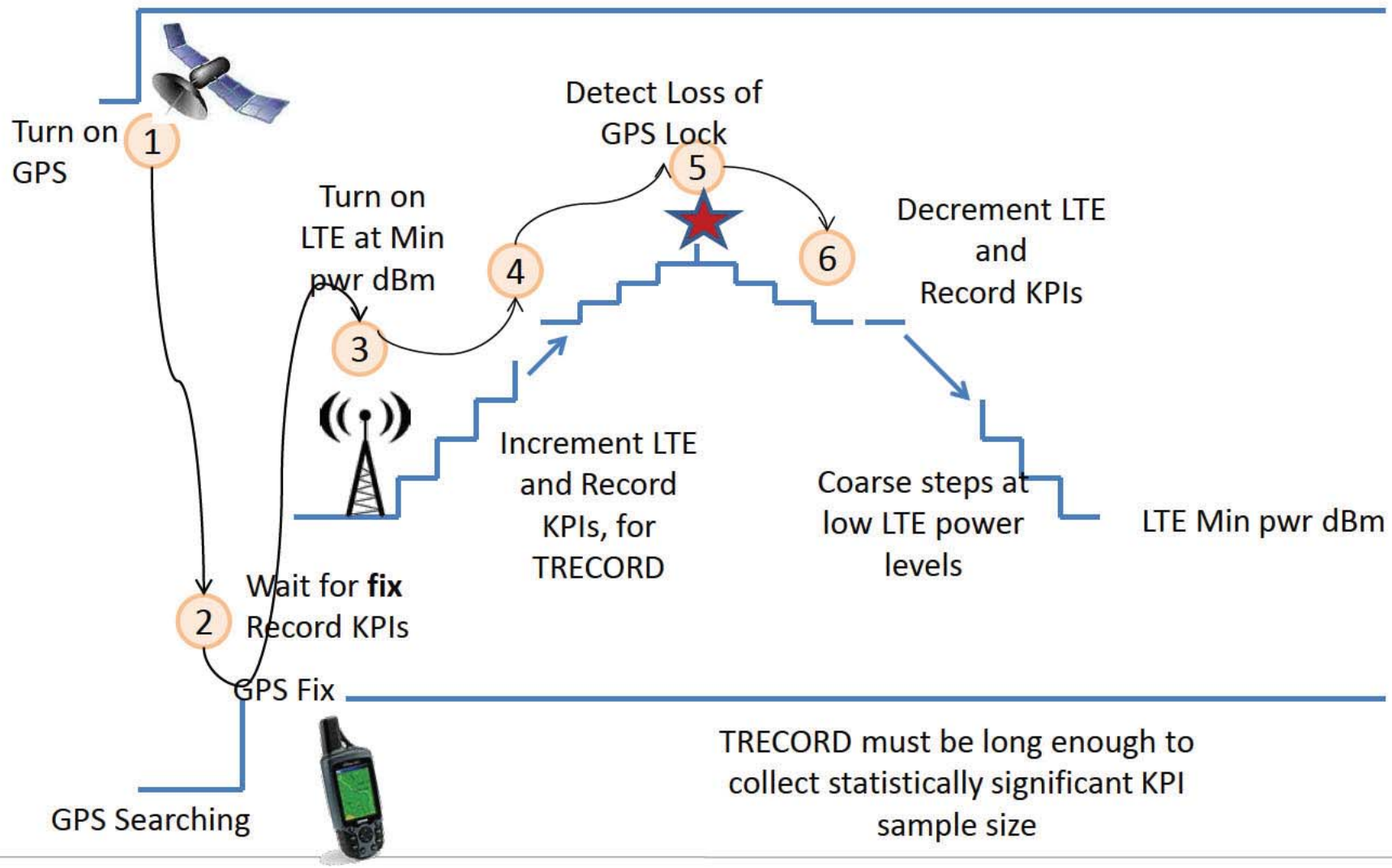

KPI's and System Data for Device Categories

Roberson and Associates, LLC
Technology and Management Consultants

	Aviation (Cert)	Aviation (Uncert.)	HP (High Precision)	Timing	Cellular	General Nav
KPI	1) C/No	1) 3D Position Error 2) Satellites in view 3) C/No 4) DOP	1) 2D Position Error 2) Augmentation Signal Quality 3) Loss of RTK 4) Satellites in view 5) C/No 6) DOP	1) Timing Error 2) Frequency Error 3) Satellites in view 4) C/No 5) DOP	1) 3GPP KPIs 2) 2D Position Error 3) Satellites in view 4) C/No 5) DOP	1) 2D Position Error 2) Satellites in view 3) C/No 4) DOP

Note: Satellites in view, DOP, and C/No are not user KPIs. Satellites in view and DOP are function of GPS satellite constellation setup and along with C/No are provided in NMEA messages and widely used in GPS characterization.

Example 3GPP KPI from 3GPP TS 34.171

Table 5.3.1: Test parameters for Nominal Accuracy

Parameters	Unit	Value
Number of generated satellites	-	8
HDOP Range	-	1.1 to 1.6
Propagation conditions	-	AWGN
GPS Coarse Time assistance error range	seconds	±2
GPS Signal for all satellites	dBm	-130

Table 5.3.2: Minimum requirements for Nominal Accuracy

Success rate	2-D position error	Max response time
95 %	30 m	20 s

Individual Measurement Results and Analysis

Test Condition [Device, GPS State, Frequency]

Test Condition ID	LTE Level	Raw Measurements	Actual KPI Value	Measurement Analysis (Table)
1	-55 dBm	Position, C/No, SV, DOP,NMEA	2D Pos. Error avg. + std. dev.	2D pos. RMS error vs. C/No (LTE pwr. Level)
1	-50 dBm	Position, C/No, SV, DOP,NMEA	2D Pos. Error avg. + std. dev.	2D pos. RMS error vs. C/No
1	-49 dBm	Position, C/No, SV, DOP,NMEA	2D Pos. Error avg. + std. dev.	2D pos. RMS error vs. C/No
1		---	---	---
1	-20 dBm or loss of lock	Position, C/No, SV, DOP,NMEA	2D Pos. Error avg. + std. dev.	2D pos. RMS error vs. C/No

Identify devices exhibiting low resilience to adjacent band power for further analysis and suggested design changes.

Compatibility Analysis and Solution Methodology

Roberson and Associates, LLC
Technology and Management Consultants

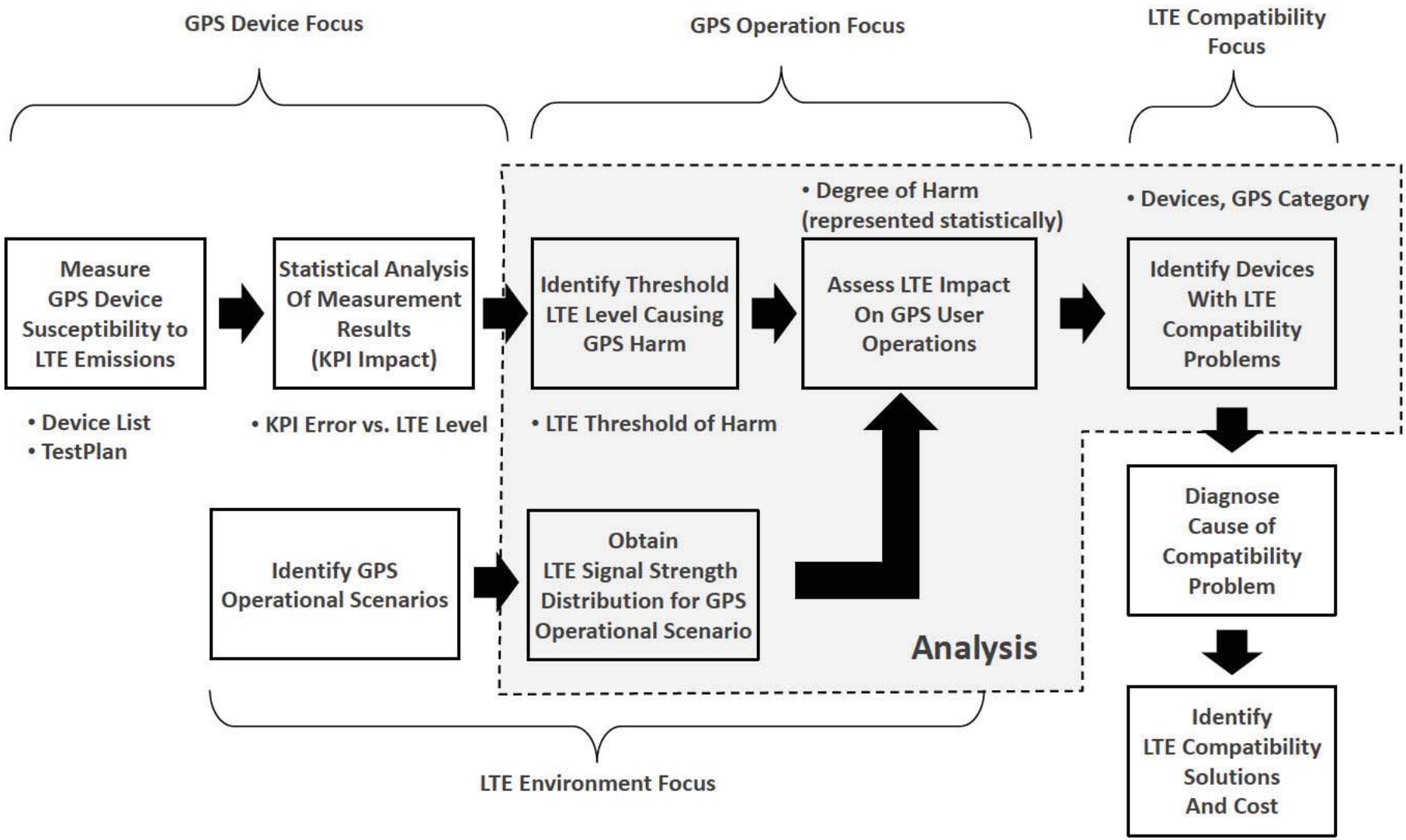

Example Analysis: Urban LTE Deployment Environment

Roberson and Associates, LLC
Technology and Management Consultants

Representative Measurement Result
KPI Error vs LTE, Device "A"

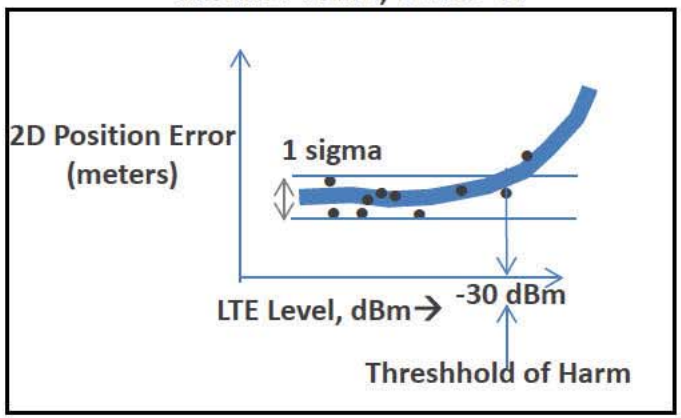

Analysis Result:
Device A Experiences Harm
in < 0.1% of Urban Area
For intervals less than X seconds

Conclusion:
GPS Device A is Compatible with Urban LTE Deployment

LTE Level vs Distance, Urban

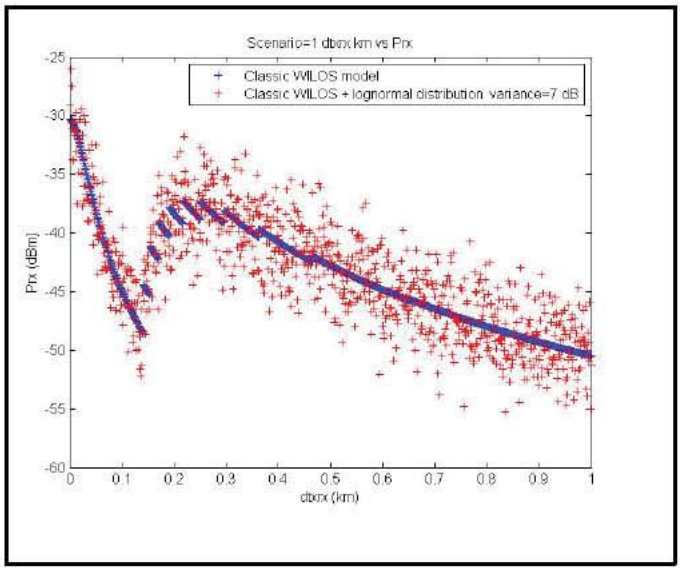

<u>Hypothetical</u> LTE CDF, Urban Environment

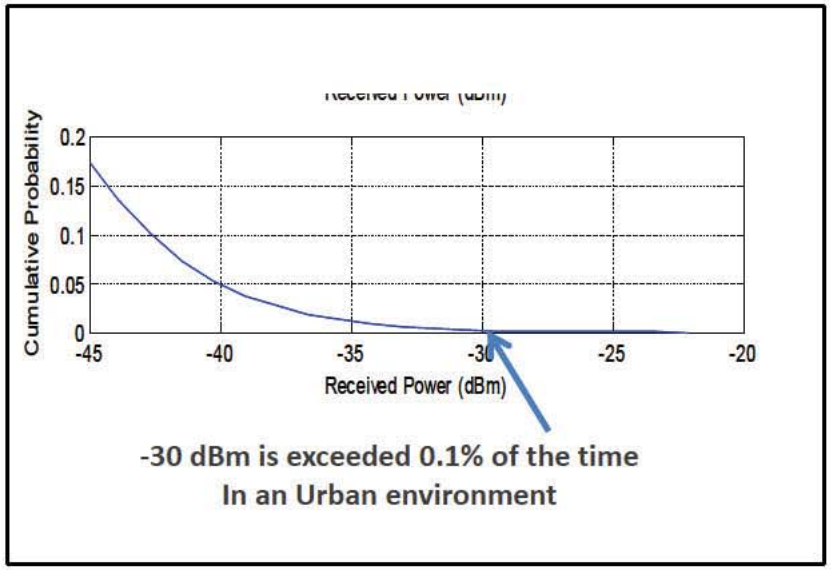

-30 dBm is exceeded 0.1% of the time
In an Urban environment

Backup

GPS Compatibility: The General Problem is.....

Roberson and Associates, LLC
Technology and Management Consultants

A strong terrestrial signal from nearby base (LTE downlink) or nearby LTE handset (UE- user equipment) can impair the performance of a poorly designed, easily overloaded GPS receiver

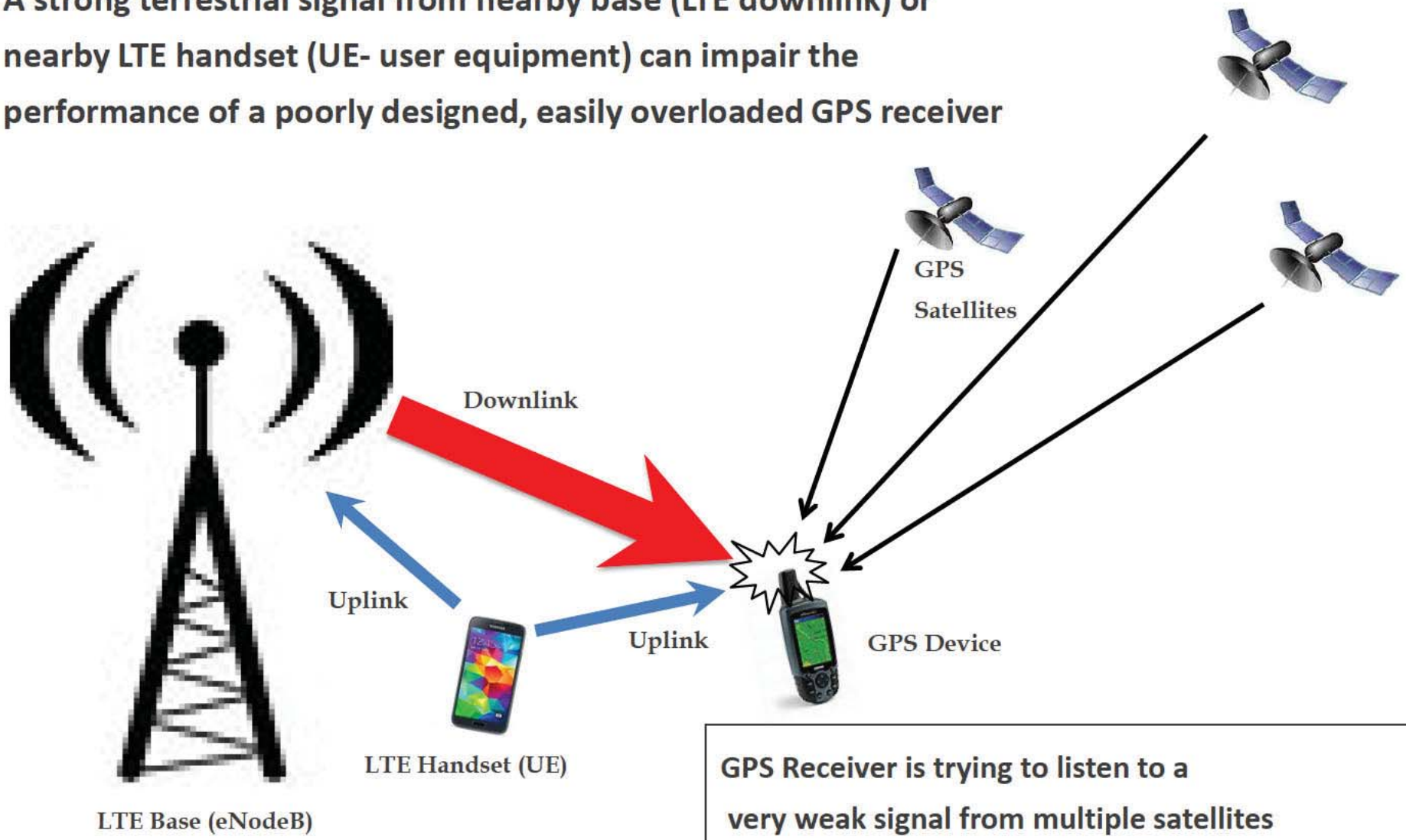

GPS Receiver is trying to listen to a very weak signal from multiple satellites

GNSS Spectrum Neighborhood

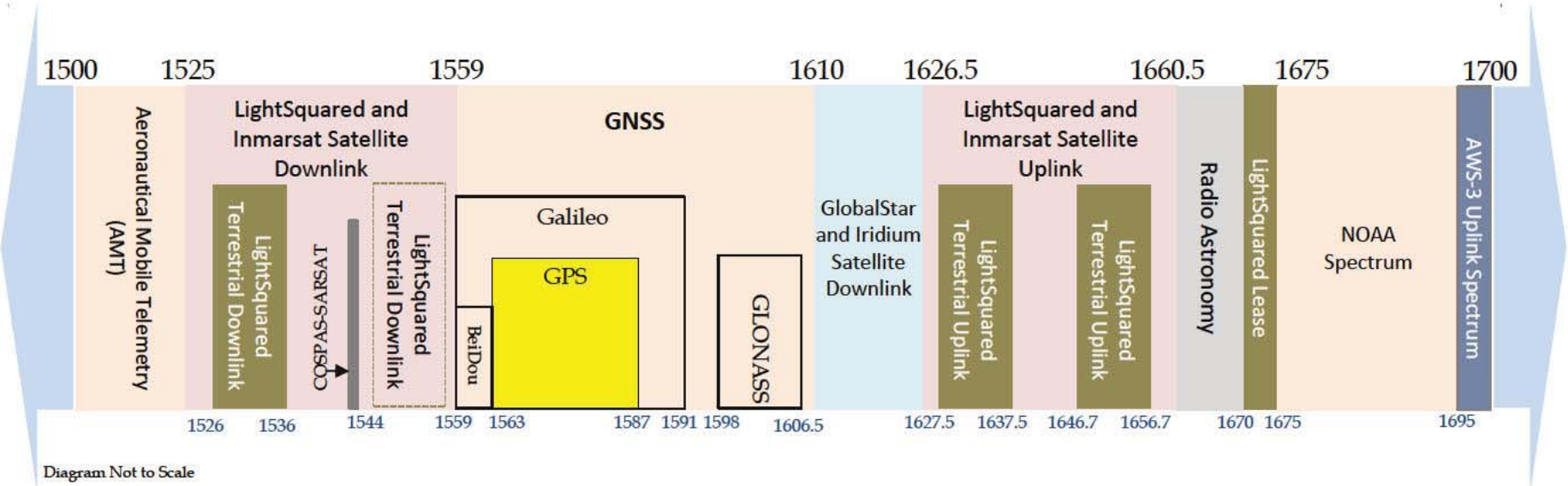

- The spectrum 1559 – 1610 MHz is allocated for GNSS service on global basis
- There are 4 major GNSS systems that share the spectrum.
- These systems use spectral separation as well as coordinated signal overlay that allow for future compatibility of devices that leverage these different GNSS constellations.
- As shown in the figure above, GLONASS signals reside closer to the LightSquared uplinks. Likewise, both BeiDou and Galileo are the lower end of the GNSS band bringing them closer to the LightSquared downlink spectrum

KPI Measurement Schematic, Conducted

Roberson and Associates, LLC
Technology and Management Consultants

- **Used for development of data collection software and detailed test methodology.**
- **May be used to identify LTE signal power level range ahead of chamber testing**

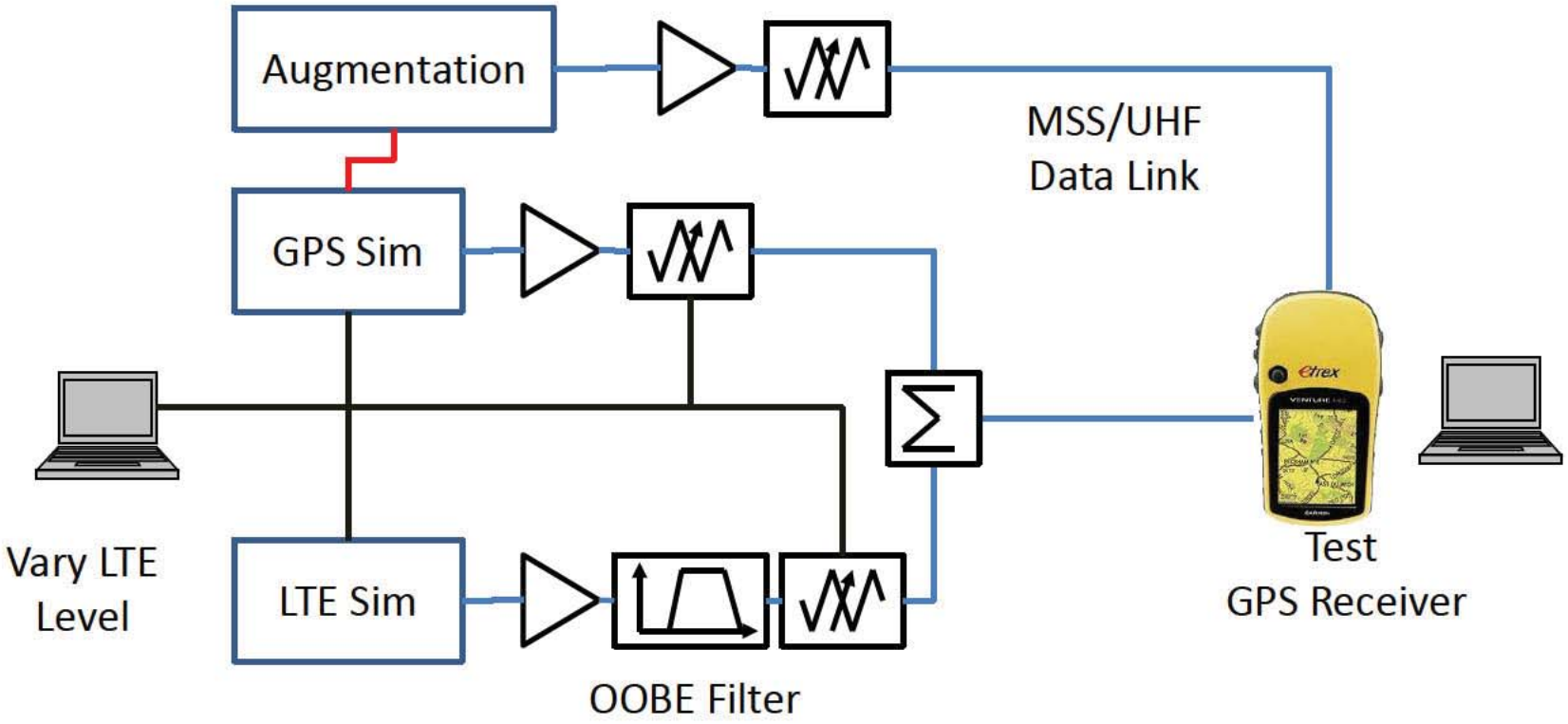
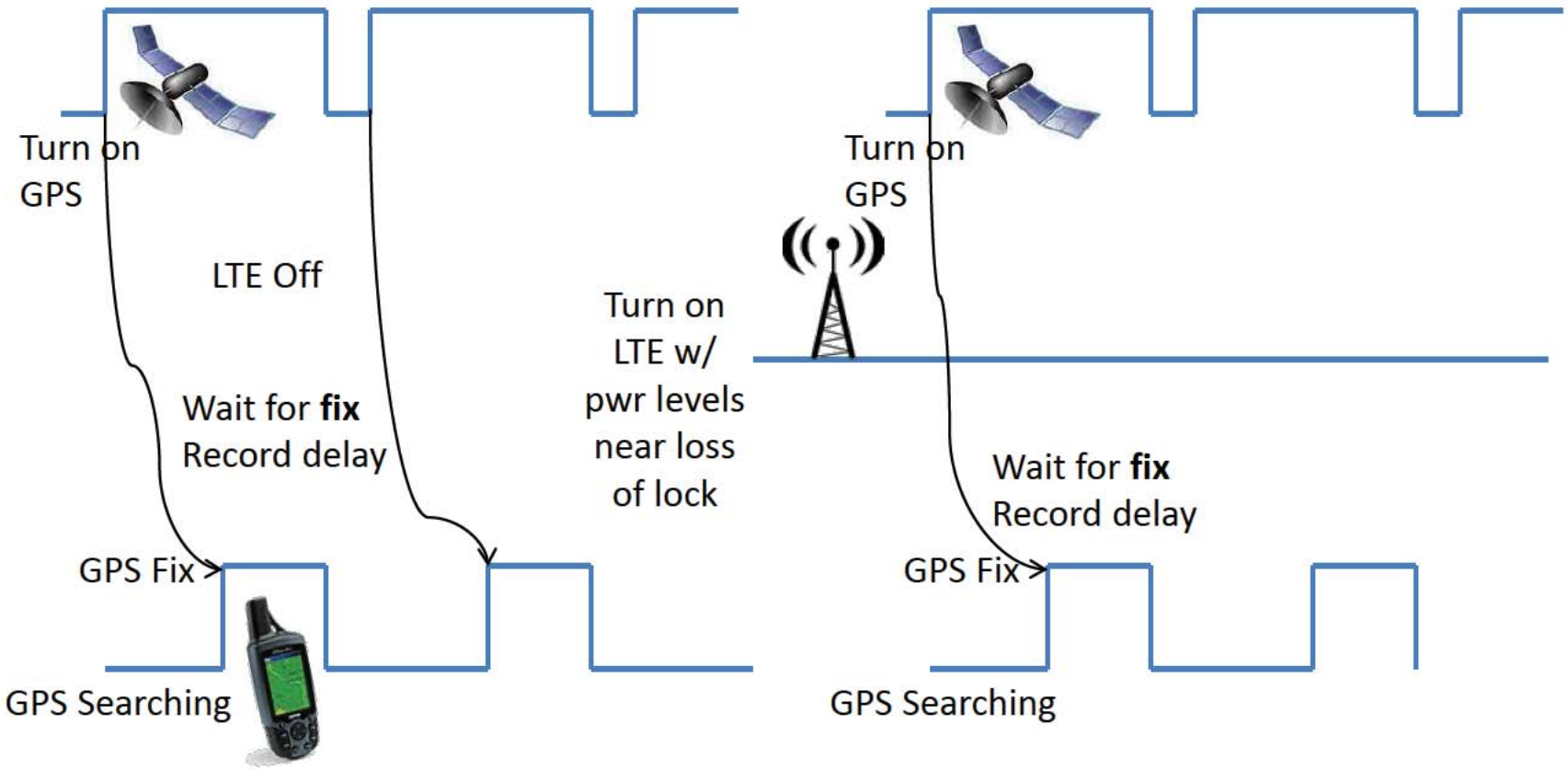
TTFF Measurements