# Technical Specification
# MEF 30.1

# Service OAM Fault Management Implementation Agreement: Phase 2

## April 2013


© The Metro Ethernet Forum 2013. Any reproduction of this document, or any portion thereof, shall contain the following statement: "Reproduced with permission of the Metro Ethernet Forum." No user of this document is authorized to modify any of the information contained herein.

Disclaimer

The information in this publication is freely available for reproduction and use by any recipient and is believed to be accurate as of its publication date. Such information is subject to change without notice and the Metro Ethernet Forum (MEF) is not responsible for any errors. The MEF does not assume responsibility to update or correct any information in this publication. No representation or warranty, expressed or implied, is made by the MEF concerning the completeness, accuracy, or applicability of any information contained herein and no liability of any kind shall be assumed by the MEF as a result of reliance upon such information.

The information contained herein is intended to be used without modification by the recipient or user of this document. The MEF is not responsible or liable for any modifications to this document made by any other party.

The receipt or any use of this document or its contents does not in any way create, by implication or otherwise:

any express or implied license or right to or under any patent, copyright, trademark or trade secret rights held or claimed by any MEF member company which are or may be associated with the ideas, techniques, concepts or expressions contained herein; nor

any warranty or representation that any MEF member companies will announce any product(s) and/or service(s) related thereto, or if such announcements are made, that such announced product(s) and/or service(s) embody any or all of the ideas, technologies, or concepts contained herein; nor

any form of relationship between any MEF member companies and the recipient or user of this document.

Implementation or use of specific Metro Ethernet standards or recommendations and MEF specifications will be voluntary, and no company shall be obliged to implement them by virtue of participation in the Metro Ethernet Forum. The MEF is a non-profit international organization accelerating industry cooperation on Metro Ethernet technology. The MEF does not, expressly or otherwise, endorse or promote any specific products or services.

© The Metro Ethernet Forum 2013. All Rights Reserved.

 **© The Metro Ethernet Forum 2013. Any reproduction of this document, or any portion thereof, shall contain the following statement: "Reproduced with permission of the Metro Ethernet Forum." No user of this document is authorized to modify any of the information contained herein.**

# Table of Contents


**1. Abstract ... 1**

**2. Terminology and Acronyms ... 1**

**3. Scope ... 5**

**4. Compliance Levels ... 6**

**5. Introduction ... 7**

5.1 OAM Domains ... 7
5.2 OAM Architecture ... 8
5.3 Default Behaviors ... 9

**6. Related Activity on OAM Fault Management Requirements ... 10**

6.1 MEF 6.1 ... 10
6.2 MEF 7.1 ... 10
6.3 MEF 10.2 ... 10
6.4 MEF 12.1 ... 10
6.5 MEF 12.1.1 ... 10
6.6 MEF 16 ... 10
6.7 MEF 17 ... 11
6.8 MEF 20 ... 11
6.9 MEF 26.1 ... 11
6.10 MEF 31 ... 11
6.11 MEF 38 ... 11

**7. Maintenance Entity Groups ... 12**

7.1 Generic MEG Requirements ... 12
7.2 MEG Security Considerations ... 13
7.3 SOAM PDU Processing Capacity ... 14
7.4 Subscriber MEG ... 14
7.5 Test MEG ... 15
7.5.1 Limitations ... 17
7.6 EVC MEG ... 17
7.7 Service Provider MEG ... 18
7.8 Operator MEG ... 20
7.9 UNI MEG ... 20
7.9.1 UNI-C MEP Requirements ... 21
7.9.2 UNI-N MEP Requirements ... 21
7.10 ENNI MEG ... 21
7.11 LAG MEG ... 21
7.12 LAG Link MEG ... 22

**8. Fault Management Protocols ... 23**

8.1 MEG ID / MAID ... 23
8.2 Continuity Check ... 24
8.2.1 Remote Defect Indication Signal ... 26
8.3 Loopback ... 26



© The Metro Ethernet Forum 2013. Any reproduction of this document, or any portion thereof, shall contain the following statement: "Reproduced with permission of the Metro Ethernet Forum." No user of this document is authorized to modify any of the information contained herein.

8.4 Linktrace ... 29
8.5 Alarm Indication Signal ... 29
8.6 Locked Signal ... 33
8.7 Test Signal ... 34
8.8 Client Signal Fail ... 36

**9. SOAM FM Interaction With Other Protocols ... 38**

9.1 SOAM FM Interaction with Link Aggregation ... 38
9.1.1 LAG Fault Management ... 39
9.1.2 Link Aggregation Link Management ... 40
9.2 SOAM FM Interaction with E-LMI ... 41
9.2.1 EVC Status Information Element ... 42
*9.2.1.1 EVC Active ... 42*
*9.2.1.2 EVC Partially Active ... 42*
*9.2.1.3 EVC Not Active ... 43*
9.2.2 CFM to E-LMI Interworking with UTA ... 43
*9.2.2.1 Interface Status isUP ... 44*
*9.2.2.2 Interface Status isDown ... 44*
*9.2.2.3 Interface Status isTesting ... 44*

**10. References ... 45**

**11. Appendix A – FM Scenarios [Informative] ... 46**

11.1.1 UNI Failure ... 46
*11.1.1.1 UNI Without Intervening Bridges ... 46*
*11.1.1.2 UNI With Intervening Bridges ... 47*
11.1.2 ENNI Failure ... 48
11.1.3 Operator NE Failure ... 49

**12. Appendix B – VLAN Tagging Implications on SOAM Treatment [Informative] ... 50**

**13. Appendix C – Mapping Between 802.1Q and Y.1731 Terms [Informative] ... 53**

**14. Appendix D – Examples of Client MEGs for Injecting AIS and LCK [Informative] 54**

## List of Figures

Figure 1 – Example SOAM Maintenance Entities ... 8
Figure 2 – OAM Domain ... 9
Figure 3 – Point-To-Point Test MEG, Example 1 ... 16
Figure 4 – Point-To-Point Test MEG, Example 2 ... 16
Figure 5 – Example SP MEG With UTA ... 19
Figure 6 – Example MP Placements With UTA ... 19
Figure 7 – MAID Field Format ... 23
Figure 8 – AIS Example 1 ... 31
Figure 9 – AIS Example 2 ... 32
Figure 10 – LCK Example ... 34
Figure 11 – MEP Placement ... 35
Figure 12 – CSF Example ... 36
Figure 13 – LinkAgg MEPs ... 39
Figure 14 – SOAM FM Interaction With E-LMI ... 41


© The Metro Ethernet Forum 2013. Any reproduction of this document, or any portion thereof, shall contain the following statement: "Reproduced with permission of the Metro Ethernet Forum." No user of this document is authorized to modify any of the information contained herein.

Figure 15 – UNI Failure Without Intervening Bridges ..... 46
Figure 16 – UNI Failure With Intervening Bridges ..... 47
Figure 17 – ENNI Failure ..... 48
Figure 18 – Operator NE Failure ..... 49
Figure 19 – VLAN Tagging Reference Diagram ..... 50
Figure 20 – VLAN Tagging Cases ..... 51
Figure 21 – SOAM Frame Formats ..... 52
Figure 22 – Example Network ..... 54

## List of Tables

Table 1 – Definitions ..... 4
Table 2 – Suggested MEGs and Usages ..... 7
Table 3 – Default MEG Levels ..... 12
Table 4 – Minimum Number of EVC MEPs at a UNI-N ..... 18
Table 5 – Terminology Mappings ..... 53


© The Metro Ethernet Forum 2013. Any reproduction of this document, or any portion thereof, shall contain the following statement: "Reproduced with permission of the Metro Ethernet Forum." No user of this document is authorized to modify any of the information contained herein.

# 1. Abstract

This document specifies an Implementation Agreement (IA) for Service Operations, Administration, and Maintenance (OAM) that builds upon the framework and requirements specified by MEF 17 [16]. In particular, this IA specifies Service OAM requirements for Maintenance Entity Groups (MEGs) and for Fault Management (FM). Service OAM in general and FM in particular are defined in IEEE 802.1Q [3] and ITU-T Y.1731 [7]. This IA details how to use these functions to achieve the MEF requirements of Service OAM in general and Service OAM FM in particular.

# 2. Terminology and Acronyms

| Term | Definition | Reference |
|---|---|---|
| AIS | Alarm Indication Signal | ITU-T G.8021 [6] |
| BBF | Broadband Forum | |
| Carrier Ethernet Network | A network supporting Carrier Ethernet services. | MEF 12.1 [12] |
| CCM | Continuity Check Message | IEEE 802.1Q [3]<br>ITU-T Y.1731 [7] |
| CEN | Carrier Ethernet Network | MEF 12.1 [12] |
| CE-VLAN ID | Customer Edge VLAN ID | MEF 10.2 [11] |
| CFM | Connectivity Fault Management | IEEE 802.1Q [3] |
| C-VID | Customer VLAN Identifier | IEEE 802.1Q [3] |
| Down MEP | A MEP residing in a Bridge that receives SOAM PDUs from, and transmits them towards, the direction of the LAN[1]. See also Up MEP. | IEEE 802.1Q [3] |
| EC | Ethernet Services Layer Connection | MEF 12.1 [12] |
| E-LAN | An Ethernet service type that is based on a Multipoint-to-Multipoint EVC. | MEF 6.1 [9] |
| E-Line | An Ethernet service type that is based on a Point-to-Point EVC. | MEF 6.1 [9] |
| E-LMI | Ethernet Local Management Interface | MEF 16 [14] |
| EMS | Element Management System | |
| ENNI | External Network Network Interface | MEF 4 [8] |
| ENNI-N | The functional element comprising one half of an ENNI, administered by the Operator whose Operator CEN terminates at the functional element. | MEF 26.1 [19] |
| ENNI MEG | External Network Network Interface Maintenance Entity Group | MEF 17 [16] |
| ETH | Ethernet MAC layer network | ITU-T Y.1731 [7] |
| Ethernet Virtual Connection | An association of two or more UNIs that limits the exchange of Service Frames to UNIs in the Ethernet Virtual Connection. | MEF 10.2 [11] |
| ETH-AIS | Ethernet Alarm Indication Signal function | ITU-T Y.1731 [7] |
| ETH-CC | Ethernet Continuity Check function (see also CCM) | ITU-T Y.1731 [7] |
| ETH-CSF | Ethernet Client Signal Fail function | ITU-T Y.1731 [7] |
| ETH-LB | Ethernet Loopback function (see also LBM) | ITU-T Y.1731 [7] |
| ETH-LCK | Ethernet Lock signal function | ITU-T Y.1731 [7] |
| ETH-LT | Ethernet Linktrace function (see also LTM) | ITU-T Y.1731 [7] |
| ETH-RDI | Ethernet Remote Defect Indication function | ITU-T Y.1731 [7] |
| ETH-Test | Ethernet Test function | ITU-T Y.1731 [7] |
| E-Tree | An Ethernet service type that is based on a Rooted-Multipoint EVC. | MEF 6.1[9] |
| EVC | Ethernet Virtual Connection | MEF 10.2 [11] |

[1]In this context, the LAN is a transmission facility for egress, rather than towards the Bridge Relay Entity.


© The Metro Ethernet Forum 2013. Any reproduction of this document, or any portion thereof, shall contain the following statement: "Reproduced with permission of the Metro Ethernet Forum." No user of this document is authorized to modify any of the information contained herein.

| Term | Definition | Reference |
|---|---|---|
| EVC MEG | Ethernet Virtual Connection Maintenance Entity Group | MEF 17 [16] |
| FD | Frame Delay | ITU-T Y.1731 [7] |
| FLR | Frame Loss Ratio | ITU-T Y.1731 [7] |
| FM | Fault Management | This document |
| IA | Implementation Agreement | |
| IEEE | Institute of Electrical and Electronics Engineers | |
| IETF | Internet Engineering Task Force | |
| INNI | Internal Network-to-Network Interface | MEF 4 [8] |
| ITU-T | International Telecommunication Union – Telecommunication Standardization Sector | |
| LACP | Link Aggregation Control Protocol | IEEE 802.1AX [2] |
| LAG | Link Aggregation Group | IEEE 802.1AX [2] |
| LAG MEG | Link Aggregation Group Maintenance Entity Group | This document |
| LAG Link | An instance of a MAC-Physical Layer-Medium Physical Layer-MAC entity between a pair of Aggregation Systems. Also known as Aggregation Link. | IEEE 802.1AX [2] |
| LAG Link MEG | LAG Link Maintenance Entity Group | This document |
| LAN | Local Area Network | |
| LBM | Loopback Message | IEEE 802.1Q [3]<br>ITU-T Y.1731 [7] |
| LBR | Loopback Reply | IEEE 802.1Q [3]<br>ITU-T Y.1731 [7] |
| LinkAgg | Link Aggregation | IEEE 802.1AX [2] |
| LTM | Linktrace Message | IEEE 802.1Q [3]<br>ITU-T Y.1731 [7] |
| LTR | Linktrace Reply | IEEE 802.1Q [3]<br>ITU-T Y.1731 [7] |
| MAC | Media Access Control | |
| MA | Maintenance Association | IEEE 802.1Q [3] |
| MAID | Maintenance Association Identifier | IEEE 802.1Q [3] |
| Maintenance Association | A set of MEPs, each configured with the same MAID and MD Level, established to verify the integrity of a single service instance. An MA can also be thought of as a full mesh of Maintenance Entities among a set of MEPs so configured. A Maintenance Association is equivalent to a Maintenance Entity Group, which is the term defined by ITU and used in this IA. | IEEE 802.1Q [3] |
| Maintenance association End Point | An actively managed SOAM entity associated with a specific service instance that can generate and receive SOAM PDUs and track any responses. It is an end point of a single MEG, and is an end point of a separate Maintenance Entity for each of the other MEPs in the same MEG that it is intended to communicate with. A Maintenance association End Point is equivalent to a MEG End Point. | IEEE 802.1Q [3] |
| Maintenance Association Identifier | An identifier for a Maintenance Association, unique over the OAM domain. The MAID has two parts: the MD Name and the Short MA Name. A MAID is equivalent to the ITUs term MEG ID. | IEEE 802.1Q [3] |
| Maintenance Domain | The part of a network for which faults in connectivity can be managed. | IEEE 802.1Q [3] |
| Maintenance domain Intermediate Point | A SOAM entity consisting of two MHFs. A Maintenance domain Intermediate Point is equivalent to a MEG Intermediate Point. | IEEE 802.1Q [3] |
| Maintenance Entity | A point-to-point relationship between two MEPs within a single MEG. | IEEE 802.1Q [3]<br>ITU-T Y.1731 [7]<br>MEF 17 [16] |


© The Metro Ethernet Forum 2013. Any reproduction of this document, or any portion thereof, shall contain the following statement: "Reproduced with permission of the Metro Ethernet Forum." No user of this document is authorized to modify any of the information contained herein.

| Term | Definition | Reference |
|---|---|---|
| Maintenance Entity Group | Equivalent to a Maintenance Association (MA). A set of MEs that exist in the same administrative boundary, with the same MEG Level and MEG ID. A Maintenance Entity Group is equivalent to a Maintenance Association. | ITU-T Y.1731 [7] |
| MD | Maintenance Domain | IEEE 802.1Q [3] |
| ME | Maintenance Entity | IEEE 802.1Q [3]<br>ITU-T Y.1731 [7]<br>MEF 17 [16] |
| MEF | Metro Ethernet Forum | |
| MEG | Maintenance Entity Group | ITU-T Y.1731 [7] |
| MEG End Point | An actively managed SOAM entity associated with a specific service instance that can generate and receive SOAM PDUs and track any responses. It is an end point of a single MEG, and is an end point of a separate Maintenance Entity for each of the other MEPs in the same MEG that it is intended to communicate with. A MEG End Point is equivalent to a Maintenance association End Point. | ITU-T Y.1731 [7] |
| MEG ID | Equivalent to the IEEE term Maintenance Association Identifier (MAID). An identifier for a MEG, unique over the domain that SOAM is to protect against the accidental concatenation of service instances. | ITU-T Y.1731 [7] |
| MEG Intermediate Point | An intermediate point in a MEG that is capable of reacting to some SOAM PDUs, but does not initiate SOAM PDUs. A MEG Intermediate Point is equivalent to a Maintenance domain Intermediate Point. | ITU-T Y.1731 [7] |
| MEG Level | A small integer in a field in a SOAM PDU that is used, along with the VID in the VLAN tag, to identify to which MEG among those associated with the SOAM PDU's VID, and thus to which ME, a SOAM PDU belongs. The MEG Level determines the MPs a) that are interested in the contents of a SOAM PDU, and b) through which the frame carrying that SOAM PDU is allowed to pass. This term is equivalent to MD Level, which is used in IEEE 802.1Q [3]. | ITU-T Y.1731 [7] |
| MEP | Maintenance association End Point (IEEE 802.1Q [3]), or equivalently MEG End Point (ITU-T Y.1731 [7]) | IEEE 802.1Q [3]<br>ITU-T Y.1731 [7] |
| MHF | MIP Half Function | IEEE 802.1Q [3] |
| MIP | Maintenance domain Intermediate Point (IEEE 802.1Q [3]) or equivalently MEG Intermediate Point (ITU-T Y.1731 [7]). | IEEE 802.1Q [3]<br>ITU-T Y.1731 [7] |
| MIP Half Function | A SOAM entity, associated with a single MD, and thus with a single MD Level and a set of VIDs, that can generate SOAM PDUs, but only in response to received SOAM PDUs. | IEEE 802.1Q [3] |
| MP | Maintenance Point. One of either a MEP or a MIP. | IEEE 802.1Q [3] |
| MTU | Maximum Transmission Unit | MEF 10.2 [11]<br>MEF 26.1 [19] |
| NE | Network Element | |
| NNI | Network-to-Network Interface | MEF 4 [8] |
| NMS | Network Management System | |
| OAM | Operations, Administration, and Maintenance | |
| OAM Domain | Equivalent to Maintenance Domain (MD). | MEF 17 [16] |
| OAM Flow Space | The portions of an end-to-end flow where SOAM frames are seen as SOAM frames (as opposed to being seen as data frames when double tagged). | |
| Operator MEG | Operator Maintenance Entity Group | MEF 17 [16] |
| Operator Virtual Connection | An association between specific External Interfaces, e.g., a UNI and an ENNI. | MEF 26.1 [19] |
| OVC | Operator Virtual Connection | MEF 26.1 [19] |
| P2P | Point-to-Point | |


© The Metro Ethernet Forum 2013. Any reproduction of this document, or any portion thereof, shall contain the following statement: "Reproduced with permission of the Metro Ethernet Forum." No user of this document is authorized to modify any of the information contained herein.

| Term | Definition | Reference |
|---|---|---|
| PCP | Priority Code Point | IEEE 802.1Q [3] |
| PDU | Protocol Data Unit | |
| Priority Code Point | This is the 3-bit field of a tag that specifies the priority of a tagged Ethernet frame. | IEEE 802.1Q [3] |
| RDI | Remote Defect Indication | IEEE 802.1Q [3]<br>ITU-T Y.1731 [7] |
| RFC | Request For Comment | |
| RUNI | Remote UNI | MEF 28 [20] |
| Service Provider | The organization providing Ethernet service(s) to the subscriber. | MEF 10.2 [11] |
| Service Provider MEG | Service Provider Maintenance Entity Group | This document |
| SP | Service Provider | MEF 10.2 [11] |
| SP-EC | Service Provider EC | MEF 12.1 [12] |
| SP MEG | Service Provider Maintenance Entity Group | This document |
| SOAM | Service Operations, Administration, and Maintenance | MEF 17 [16] |
| SOAM frame | Service OAM frame. Specifically, an Ethernet frame containing a SOAM PDU. | This document |
| SOAM PDU | Service OAM Protocol Data Unit. Specifically, those PDUs defined in IEEE 802.1Q [3], ITU-T Y.1731 [7], or MEF specifications. | This document |
| Subscriber MEG | Subscriber Maintenance Entity Group | MEF 17 [16] |
| S-VID | Service VLAN Identifier | IEEE 802.1Q [3] |
| Test MEG | Test Maintenance Entity Group | MEF 20 [17] |
| UNI | User Network Interface | MEF 10.2 [11] |
| UNI-C | Subscriber side UNI functions | MEF 4 [8] |
| UNI MEG | User Network Interface Maintenance Entity Group | MEF 17 [16] |
| UNI-N | Network side UNI functions | MEF 4 [8] |
| Up MEP | A MEP residing in a Bridge that transmits SOAM PDUs towards, and receives them from, the direction of the Bridge Relay Entity. See also Down MEP. | IEEE 802.1Q [3] |
| UTA | UNI Tunnel Access | MEF 28 [20] |
| VID | VLAN Identifier | IEEE 802.1Q [3] |
| VLAN | Virtual LAN | IEEE 802.1Q [3] |
| VUNI | Virtual UNI | MEF 28 [20] |

**Table 1 – Definitions**

Note: IEEE 802.1Q [3] and ITU-T Y.1731 [7] define some of the same OAM concepts with different terminology. This document uses the ITU-T Y.1731 terminology, except for MAID (and MA in the context of discussing the MAID), which is used in addition to MEG ID to clarify the formatting of the MEG ID. See Appendix C for a mapping between the two sets of terms.


© The Metro Ethernet Forum 2013. Any reproduction of this document, or any portion thereof, shall contain the following statement: "Reproduced with permission of the Metro Ethernet Forum." No user of this document is authorized to modify any of the information contained herein.

# 3. Scope

The scope of this document is an Implementation Agreement (IA) that specifies functional requirements for Fault Management (FM) for Metro Ethernet Forum (MEF) services. These requirements are primarily driven by MEF 17 [16] and leverage the OAM functions defined by IEEE 802.1Q [3] and ITU-T Y.1731 [7]. When and if necessary, this IA may define enhancements to existing functions to satisfy Service OAM (SOAM) requirements. These functions are defined as generically as possible.

In particular this IA is targeted at the following Maintenance Entity Groups (MEGs) defined and in use by the MEF:

- Subscriber MEG
- Test MEG
- EVC MEG
- Service Provider MEG
- Operator MEG
- UNI MEG
- ENNI MEG
- LAG MEG
- LAG Link MEG

This IA also discusses the following OAM functions:

- Continuity Check
- Remote Defect Indication
- Loopback
- Linktrace
- Alarm Indication Signal
- Locked Signal
- Test Signal
- Client Signal Fail

This IA attempts to maintain consistent functionality and requirements across the various MEGs.

Generic SOAM requirements and Fault Management elements are covered in this IA. SOAM Performance Management capabilities are covered in MEF 35 [24].


© The Metro Ethernet Forum 2013. Any reproduction of this document, or any portion thereof, shall contain the following statement: "Reproduced with permission of the Metro Ethernet Forum." No user of this document is authorized to modify any of the information contained herein.

# 4. Compliance Levels

The key words "**MUST**", "**MUST NOT**", "**REQUIRED**", "**SHALL**", "**SHALL NOT**", "**SHOULD**", "**SHOULD NOT**", "**RECOMMENDED**", "**MAY**", and "**OPTIONAL**" in this document are to be interpreted as described in IETF RFC 2119 [5]. All key words must be in upper case, bold text.

A paragraph preceded by **[R*x*]**, where *x* indicates a sequentially increasing number throughout the document, specifies a mandatory requirement that **MUST** be followed. A paragraph preceded by **[D*y*]**, where *y* indicates a sequentially increasing number throughout the document, specifies a desired requirement that **SHOULD** be followed. A paragraph preceded by **[O*z*]**, where *z* indicates a sequentially increasing number throughout the document, specifies an optional requirement that **MAY** be followed.

A paragraph preceded by **[CR*a*]<**, where *a* indicates a sequentially increasing number throughout the document, specifies a mandatory requirement that **MUST** be followed if the condition(s) following the "<" have been met. For example, "**[CR1]<[D38]**" indicates that conditional requirement 1 must be followed if desired requirement 38 has been met. A paragraph preceded by **[CD*b*]<**, where *b* indicates a sequentially increasing number throughout the document, specifies a desired requirement that **SHOULD** be followed if the condition(s) following the "<" have been met. A paragraph preceded by **[CO*c*]<**, where *c* indicates a sequentially increasing number throughout the document, specifies an optional requirement that **MAY** be followed if the condition(s) following the "<" have been met.


© The Metro Ethernet Forum 2013. Any reproduction of this document, or any portion thereof, shall contain the following statement: "Reproduced with permission of the Metro Ethernet Forum." No user of this document is authorized to modify any of the information contained herein.

# 5. Introduction

SOAM FM describes the use of standard protocols, mechanisms, and procedures for monitoring and investigating the status of Ethernet Virtual Connections (EVCs), Operator Virtual Connections (OVCs), and External Interfaces across a defined OAM Domain, where that domain can be a large network (or subnetwork), or a simple link. SOAM FM uses the protocols of IEEE 802.1Q [3] and ITU-T Y.1731 [7] in order to determine the status of and troubleshoot connectivity across a particular domain. See Appendix C for a discussion of the use of IEEE 802.1Q and ITU-T Y.1731 terminology.

The requirements in this IA are primarily from the perspective of the Network Element (NE) rather than the administrator of the NE. However, some requirements represent requirements on how NEs are implemented and used. These requirements are specified to make NE OAM functionality simpler and more likely to interoperate.

## 5.1 OAM Domains

As discussed in MEF 17 [16], SOAM allows a network to be partitioned into a set of hierarchical domains, where a domain is a contiguous (sub)-network, and each domain can be further partitioned into additional (sub)-domains. OAM domains are intended to represent administrative boundaries. The OAM domains relevant to this IA are listed in Table 2:

| MEG | Suggested Usage |
|---|---|
| Subscriber MEG | Subscriber monitoring of an Ethernet service |
| Test MEG | Service Provider isolation of subscriber reported problems |
| EVC MEG | Service Provider monitoring of provided service |
| Service Provider MEG | Service Provider monitoring of Service Provider network |
| UTA SP MEG | Service Provider monitoring of UNI Tunnel Access |
| Operator MEG | Network Operator monitoring of the portion of a network |
| UNI MEG | Service Provider monitoring of a UNI |
| ENNI MEG | Network Operator monitoring of an ENNI |
| UNI LAG Link MEG | Service Provider monitoring of LAG link across a UNI |
| ENNI LAG Link MEG | Network Operator monitoring of a LAG link across an ENNI |

**Table 2 – Suggested MEGs and Usages**

Fault Management will be discussed for each OAM domain. For a further discussion of these Maintenance/OAM Domains, refer to MEF 17 [16]. The Test MEG was introduced in MEF 20 [17], and is described in Appendix A of that IA. The Service Provider MEG is introduced in this document in section 7.7. The LAG MEG is introduced in this document in section 7.11. The LAG Link MEG is introduced in this document in section 7.12.


© The Metro Ethernet Forum 2013. Any reproduction of this document, or any portion thereof, shall contain the following statement: "Reproduced with permission of the Metro Ethernet Forum." No user of this document is authorized to modify any of the information contained herein.

## 5.2 OAM Architecture

Figure 1 (which is derived from Figure 1 from MEF 20, which in turn is based on Figure 5 from MEF 17) illustrates pairs of MEPs (thus MEs) and MIPs that may be communicating across the various OAM domains discussed in this IA, and also illustrates the hierarchical relationship between these domains.

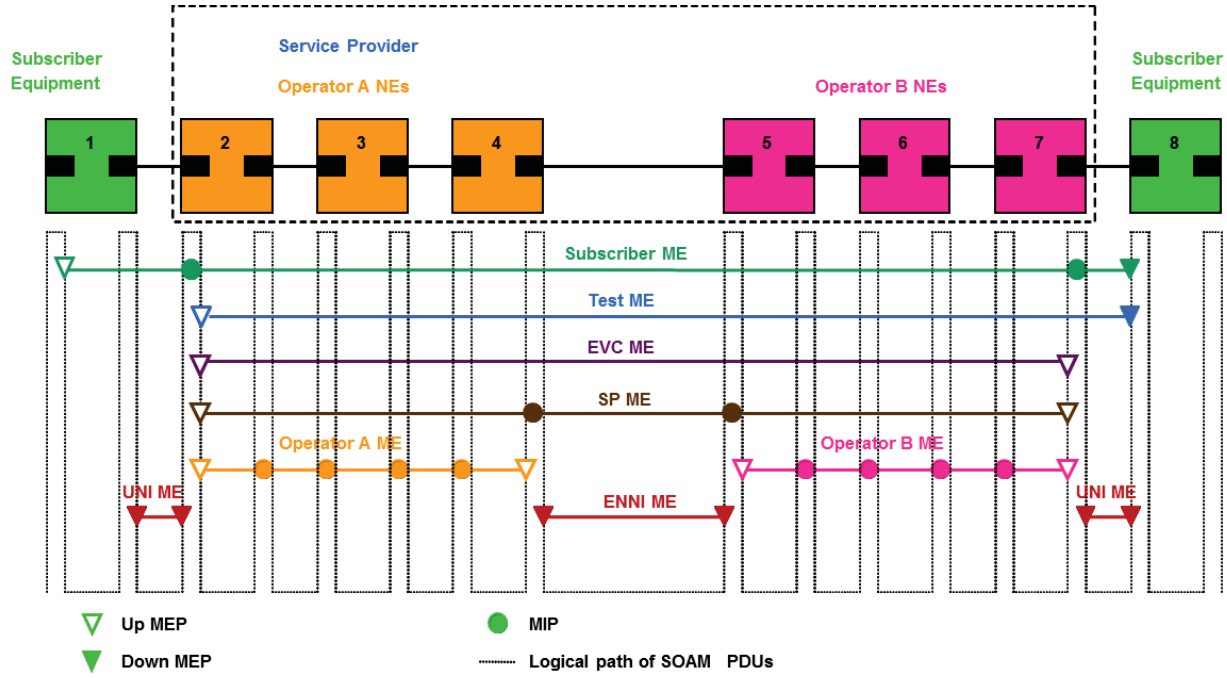


**Figure 1 – Example SOAM Maintenance Entities**

Note 1: The given MEP and MIP locations, and MEP orientations, are for example purposes only. There are cases where the locations and orientations may differ. As shown with the example of the Subscriber ME, the ends of a ME are not required to be the same (i.e., both Up MEPs or both Down MEPs). Requirements and recommendations for the orientation of MEPs are provided in later sections of this IA.

Note 2: The use of MIPs, as shown in Figure 1, by a Service Provider or an Operator at the Subscriber MEG Level would allow a Subscriber to determine that traffic has traversed the intended External Interfaces (EIs) through the network(s). Additionally, MIPs configured by an Operator at the SP MEG Level could allow a Service Provider to determine if a connectivity problem exists in a particular Operator network (via the SP MEG MIPs).

When flowing from subscriber equipment at one location to subscriber equipment at another location, a frame can have tags added or removed. Appendix B explains the impact of VLAN ID (VID) manipulation on Service OAM PDUs and the implications for OAM domain delineation. Sometimes this requires Subscribers, Providers, and Operators to share the MEG Levels and mutually agree on the use of each MEG Level.


© The Metro Ethernet Forum 2013. Any reproduction of this document, or any portion thereof, shall contain the following statement: "Reproduced with permission of the Metro Ethernet Forum." No user of this document is authorized to modify any of the information contained herein.

Figure 2 looks more closely at one particular OAM domain and the MEs of a particular multipoint EVC. The OAM domain consists of the Maintenance Entity Group {$MEP_1$, $MEP_2$, $MEP_3$, $MEP_4$} where each unique MEP pair (i.e., {{$MEP_1$, $MEP_2$}, {$MEP_1$, $MEP_3$}, {$MEP_1$, $MEP_4$}, {$MEP_2$, $MEP_3$}, {$MEP_2$, $MEP_4$}, {$MEP_3$, $MEP_4$}}) constitutes a separate ME.

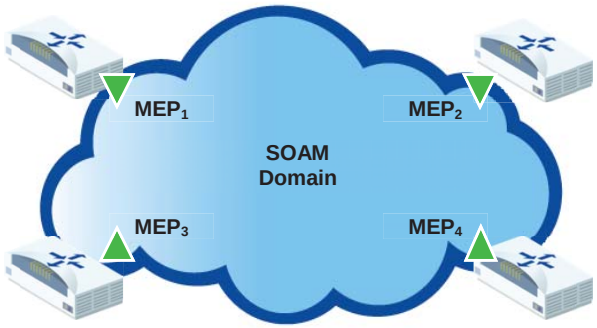


**Figure 2 – OAM Domain**

## 5.3 Default Behaviors

One of the important functions of this document is to simplify the provisioning of OAM across a Carrier Ethernet Network (CEN). To this end, a *default value* for an attribute of a maintenance object is defined as the value to be used for that attribute when no other value has been specified during the creation of that object. The use of default values aids interoperability.

Note that the specification of default values does not relieve equipment or service providers of being capable of using a different value if one of the parties has an issue. In other words, specification of a default value assumes that the value is settable and that other values could be used. The default value is suggested as a value to shorten or obviate the need for negotiations in most cases. However, other mandatory values are to be available for those cases where the default may not be suitable to one of the parties.


© The Metro Ethernet Forum 2013. Any reproduction of this document, or any portion thereof, shall contain the following statement: "Reproduced with permission of the Metro Ethernet Forum." No user of this document is authorized to modify any of the information contained herein.

# 6. Related Activity on OAM Fault Management Requirements

This section provides a brief overview of related OAM requirements in other MEF documents. This discussion is not intended to be complete or exhaustive. For additional information, refer to the referenced MEF specifications.

The primary MEF specifications that place requirements or assume behavior related to SOAM are MEF 6.1 [9], MEF 7.1 [10], MEF 10.2 [11], MEF 12.1 [12], MEF 12.1.1 [13], MEF 16 [14], MEF 17 [16], MEF 20 [17], MEF 26.1 [19], MEF 31 [21], and MEF 38 [25]. Each of these is briefly discussed in the sections below.

## 6.1 MEF 6.1

MEF 6.1 [9] defines the Ethernet Service Types: E-Line, E-LAN, and E-Tree. It also provides some basic SOAM requirements.

## 6.2 MEF 7.1

MEF 7.1 [10] defines the MEF's element management object model. In particular, it provides the Service OAM information model.

## 6.3 MEF 10.2

MEF 10.2 [11] describes the attributes of an Ethernet service from the perspective of the Customer Equipment (CE) at the User Network Interface (UNI) reference point. These attributes are related to the type and quality of the forwarding service provided by that EVC, with the goal to provide a "black box" view of an EVC as seen by the customer. The customer perspective includes a number of fault/availability attributes including EVC availability.

## 6.4 MEF 12.1

MEF 12.1 [12] describes the network architecture in support of Ethernet service. Included in the architecture are the concepts of the Service Provider Ethernet Connection (SP EC), the Operator Ethernet Connection (O-EC), and the Subscriber Ethernet Connection (S-EC), and their relationships to EVCs and OVCs.

## 6.5 MEF 12.1.1

MEF 12.1.1 [13] describes SOAM MP placements in Appendix I.

## 6.6 MEF 16

MEF 16 [14] specifies the E-LMI, which defines the capability to communicate properties of the EVC, including status, from a UNI-N to a UNI-C. It also defines some configuration capabilities.


© The Metro Ethernet Forum 2013. Any reproduction of this document, or any portion thereof, shall contain the following statement: "Reproduced with permission of the Metro Ethernet Forum." No user of this document is authorized to modify any of the information contained herein.

## 6.7 MEF 17

MEF 17 [16] provides a high level overview of SOAM architecture and capabilities, and discusses some of the requirements for MEF Service OAM. According to these requirements, SOAM provides the ability to determine Connectivity Status, one-way Frame Loss Ratio, two-way Frame Delay, and one-way Frame Delay Variation for point-to-point EVCs.

## 6.8 MEF 20

MEF 20 [17] provides requirements for UNI Type II devices. Included in the MEF 20 specification are some Fault Management requirements for the Subscriber MEG, Test MEG, and UNI MEG. This document provides a superset of those requirements.

## 6.9 MEF 26.1

MEF 26.1 [19] provides details about the External Network Network Interface (ENNI). MEF 26.1 defines elements related to the ENNI, including the ENNI MEG, for which this document defines SOAM requirements.

## 6.10 MEF 31

MEF 31 [21] provides SNMP managed objects for use with SOAM implementations.

## 6.11 MEF 38

MEF 38 [25] provides YANG managed objects for use with SOAM implementations.


© The Metro Ethernet Forum 2013. Any reproduction of this document, or any portion thereof, shall contain the following statement: "Reproduced with permission of the Metro Ethernet Forum." No user of this document is authorized to modify any of the information contained herein.

# 7. Maintenance Entity Groups

This section describes requirements that are specific to Maintenance Entity Groups (MEGs), both generically and per specific Maintenance Entity Group.

## 7.1 Generic MEG Requirements

This section details the MEGs that must be supported by NEs in a Carrier Ethernet Network (CEN). Figure 1 illustrates the MEGs relevant to OAM.

**[R1]** The MEG Level for each MEG **MUST** be configurable with any valid MEG Level value (0…7).

**[R2]** The default value for the MEG Level for each MEG **MUST** be in conformance with Table 3:

| MEG | Default MEG Level |
|---|---|
| Subscriber MEG | 6 |
| Test MEG | 5 |
| EVC MEG | 4 |
| Service Provider MEG | 3 |
| UTA SP MEG | 3 |
| Operator MEG | 2 |
| UNI MEG | 1 |
| ENNI MEG | 1 |
| UNI LAG Link MEG | 0 |
| ENNI LAG Link MEG | 0 |

**Table 3 – Default MEG Levels**

Note 1: Table 3 is more specific than that given in MEF 17 [16], but is consistent with MEF 17.

Note 2: Assignment of numerical MEG Levels to Subscriber (or customer) role, Service Provider role, and Operator role is somewhat arbitrary since those terms imply business relationships that cannot be standardized. For example, a Subscriber (or customer) may also be an Operator seeking a service from another Operator. The MEG Level default values are consistent with a shared MEG Level model across Subscriber, Operators, and Service Providers.

Note 3: The MEF and Broadband Forum (BBF) are not aligned on the use of MEG Level 5. If interworking between an MEF compliant implementation and a BBF compliant implementation is required, an agreement on the use of MEG Level 5 is required between the two parties.

**[R3]** When a MEG uses tagged SOAM frames, the VLAN ID (VID) of the MEG **MUST** be configurable with any valid VID value (1-4094).


© The Metro Ethernet Forum 2013. Any reproduction of this document, or any portion thereof, shall contain the following statement: "Reproduced with permission of the Metro Ethernet Forum." No user of this document is authorized to modify any of the information contained herein.

## 7.2 MEG Security Considerations

The OAM architecture is designed such that a MEP at a particular MEG Level transparently passes SOAM traffic at a higher MEG Level, terminates traffic at its own MEG Level, and discards SOAM traffic at a lower MEG Level. This results in a nesting requirement where a MEG with a lower MEG Level cannot exceed the boundary of a MEG with a higher MEG Level. IEEE 802.1Q [3] discusses this nesting in Clause 18.3.

The domain hierarchy provides a mechanism for protecting a Maintenance Point (MP) — either a MEP or a MIP — from other MPs with which the MP has not been designed to communicate. However, this protection does not guard against Denial of Service attacks at a MEG Level where communications are allowed. It is possible for an MP (through error or deliberately) to flood one or more of its peer (or apparently peer) MPs with SOAM PDUs. This can result in a denial of service by forcing the receiving MPs to use computing resources for processing the SOAM PDUs from the flooding MP.

The following requirement is designed to ensure that Network Elements (NEs) are not susceptible to a denial of service attack via SOAM PDUs.

**[R4]** An NE supporting MPs **MUST** support a mechanism to limit the number of SOAM PDUs per second that are processed. This limit may be per network element, or a limit per sub-object on a network element (e.g., per interface, per card, per MP, etc.).

The intent is that the performance of an NE supporting MPs is to not be compromised by SOAM PDUs transmitted in excess of the limit mentioned above.

To meet this requirement, the NE is allowed to discard SOAM PDUs when the rate of SOAM PDUs exceeds capabilities of the NE. The performance of the NE, in this context, is the externally seen (or black-box) behavior of the NE. The mechanism is to be designed so that the discard of excess SOAM PDUs is not noticeable by any user of the system except in specifically designed alarms/statistics.

**[R5]** An NE **MUST** indicate that SOAM PDUs have been discarded due to exceeding the NE's capabilities.

**[D1]** An NE **SHOULD** indicate the number of SOAM PDUs that have been discarded due to exceeding the NE's capabilities, using the inOamFramesDiscarded attribute described in MEF 7.1 [10].

Note that this mechanism is most vital in applications where either the MEPs within a MEG are under different administrative authority (e.g., at the ENNI MEG), or when a MIP is made available for Linktrace functions to MEPs under different administrative authorities (e.g., making a MIP at the ENNI visible to a subscriber MEG). However, the requirement is NE-specific and independent of the deployment location so that the function is applicable no matter where the NE is deployed.


© The Metro Ethernet Forum 2013. Any reproduction of this document, or any portion thereof, shall contain the following statement: "Reproduced with permission of the Metro Ethernet Forum." No user of this document is authorized to modify any of the information contained herein.

## 7.3 SOAM PDU Processing Capacity

It is important to users of network elements to understand the capacity of the network element to initiate and respond to SOAM PDUs. The requirements of this section demonstrate a minimal OAM capacity to be supported by all network elements.

**[R6]** An MP capacity (maximum number of MPs that can be guaranteed to be able to be simultaneously instantiated on the NE) **MUST** be specified for a network element.

**[R7]** A remote MEP capacity (maximum number of remote MEPs that can be guaranteed to be able to be simultaneously communicated with by the NE) **MUST** be specified for a network element.

**[R8]** An NE **MUST** be able to receive at least 1 SOAM PDU per second per remote MEP.

**[R9]** An NE **MUST** be able to transmit at least 1 SOAM PDU per second per instantiated MP.

**[D2]** An MP **SHOULD** support receiving at least 10 SOAM PDUs per second per remote MEP.

Note: The requirement for receiving 1 SOAM PDU per second provides for very minimal CCM processing. The desired amount of at least 10 SOAM PDUs per second provides for additional messages, for example, LBM/LBR PDUs, LTM/LTR PDUs, and/or performance monitoring PDUs.

These requirements allow NEs of varying MP capacities. An NE need only support a minimal number of SOAM PDUs based on its stated MP capacity. E.g., if a NE claims to support 1000 MPs, it must be able to receive and transmit at least 1000 SOAM PDUs per second.

## 7.4 Subscriber MEG

The Subscriber MEG is assigned to the Subscriber.

**[R10]** A UNI-C **MUST** be able to support a MEP on the Subscriber-MEG for each configured EVC.

**[D3]** A UNI-N **SHOULD** be capable of enabling a MIP for each supported Subscriber MEG.

**[D4]** SOAM Frames on a Subscriber MEG monitoring an EVC to which untagged and priority-tagged Data Service Frames are mapped **SHOULD NOT** be C-tagged at the UNI.

**[R11]** SOAM Frames on a Subscriber MEG monitoring an EVC to which only C-tagged Data Service Frames are mapped **MUST** be C-tagged at the UNI.

**[D5]** Subscriber MEG SOAM Frames that are C-tagged **SHOULD** use a C-VID value equal to the lowest CE-VLAN ID that maps to that EVC.


© The Metro Ethernet Forum 2013. Any reproduction of this document, or any portion thereof, shall contain the following statement: "Reproduced with permission of the Metro Ethernet Forum." No user of this document is authorized to modify any of the information contained herein.

No preference is expressed for whether a MEP corresponding to the Subscriber MEG at the UNI-C is an Up MEP or a Down MEP.

## 7.5 Test MEG

The Test MEG is assigned to the Service Provider for isolation of subscriber reported problems or service activation testing. The Test MEG uses a MEP placed in the subscriber's equipment (at the UNI-C), at the UNI-N, or at the ENNI-N; and another MEP is located somewhere else within the Service Provider's network. The Test MEG is not necessarily active at all times, and is used generally on an on-demand basis.

This section contains requirements for the use of Test MEGs in point-to-point EVCs. Test MEGs in multipoint EVCs are considered outside the scope of this IA.

Note: For additional information about the Test MEG, see Appendix A of MEF 20 [17].

**[R12]** If one or more Test MEGs are supported on a CE, the UNI-C **MUST** be able to support at least one MEP on each Test MEG.

**[D6]** A UNI-C **SHOULD** be able to support a MEP on a Test MEG for each configured EVC.

**[D7]** When the CE implementing the UNI-C is an IEEE 802.1Q [3] Bridge, the MEP corresponding to a Test-MEG on a UNI-C **SHOULD** be a Down MEP.

**[D8]** When C-Tagged, the SOAM frames on a Test MEG **SHOULD** be able to use the CE-VLAN ID with the lowest VID value that is mapped into the corresponding EVC.

The SP coordinates with the customer to activate a MEP in a Test MEG at the UNI-C. The SP configures a MEP in its own network at a point that is CE-VLAN ID aware. SOAM-FM functions can be performed between the MEP at the UNI-C and the MEP within the SP network. Example Test MEGs are illustrated in Figure 3 and Figure 4.


© The Metro Ethernet Forum 2013. Any reproduction of this document, or any portion thereof, shall contain the following statement: "Reproduced with permission of the Metro Ethernet Forum." No user of this document is authorized to modify any of the information contained herein.

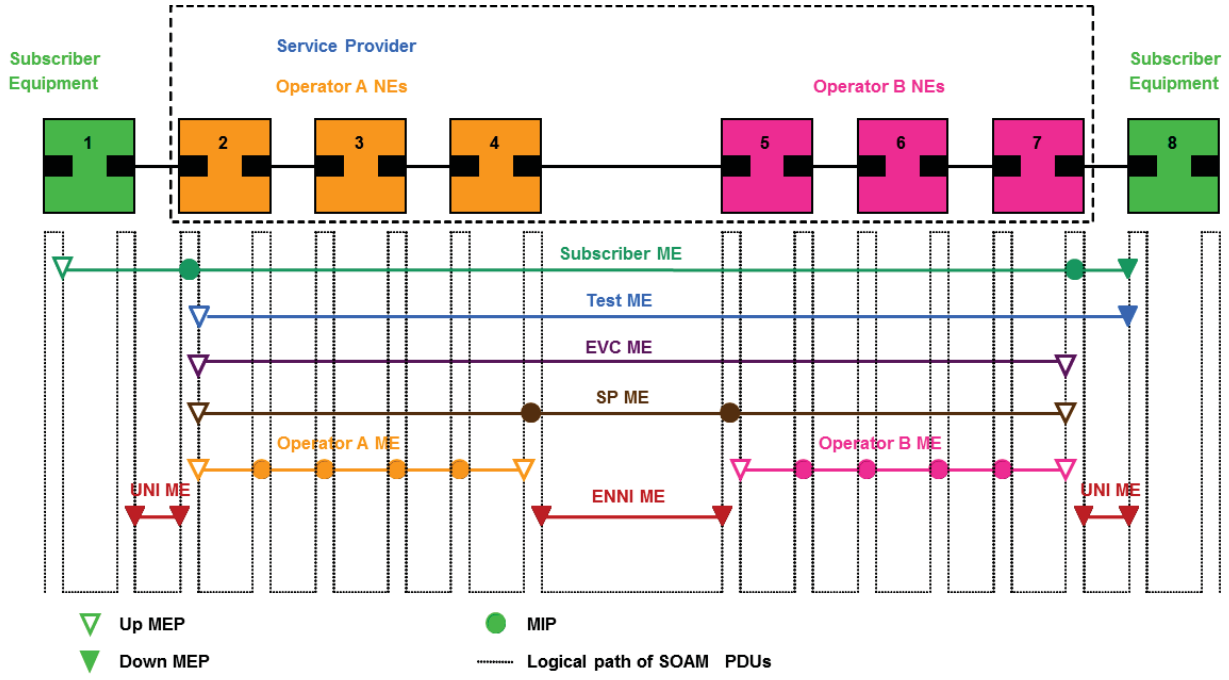


**Figure 3 – Point-To-Point Test MEG, Example 1**

Figure 3 shows the Test ME extending from the UNI-N at device 2 to the UNI-C at device 8. In this case the Test ME includes all of the EVC ME.

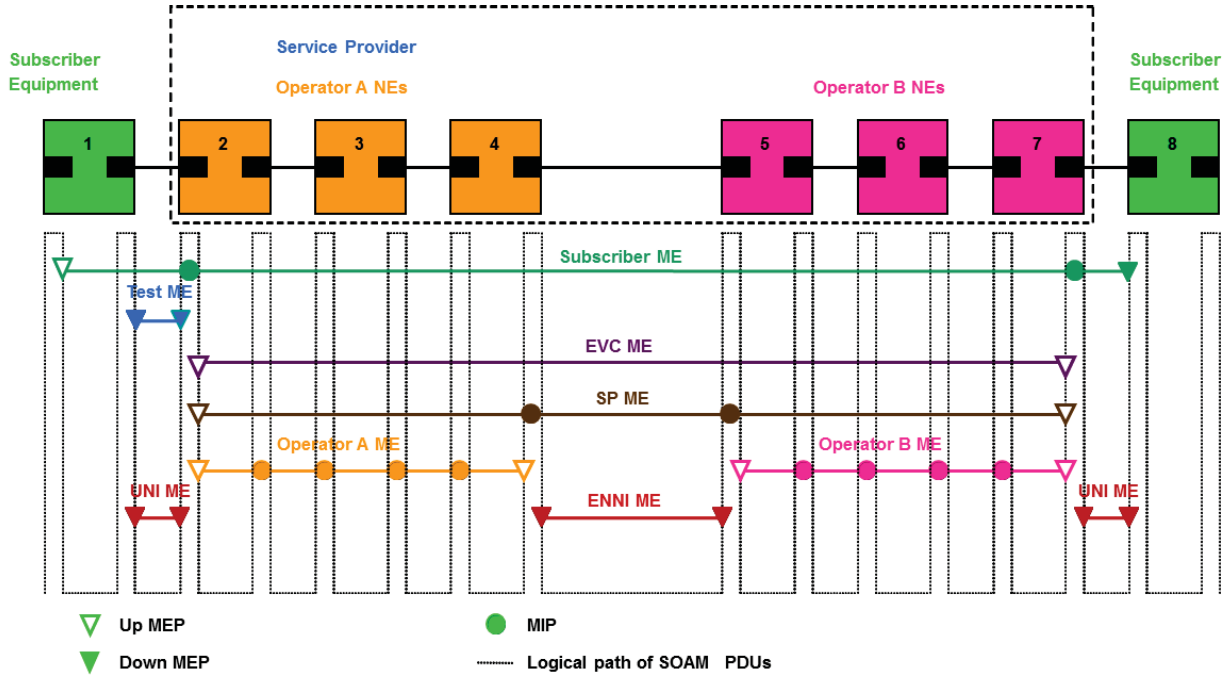


**Figure 4 – Point-To-Point Test MEG, Example 2**


© The Metro Ethernet Forum 2013. Any reproduction of this document, or any portion thereof, shall contain the following statement: "Reproduced with permission of the Metro Ethernet Forum." No user of this document is authorized to modify any of the information contained herein.

In Figure 4, the Test ME extends from the UNI-C at device 1 to the UNI-N at device 2. The rest of the EVC is not included in the Test ME. This view is fairly limited in scope and is different from the UNI ME because it is on a specific EVC rather than at the port level as is the UNI ME.[2]

**[R13]** The Service Provider **MUST** be able to add a MEP to the Test MEG at the UNI-N.

**[O1]** The MEPs of the Test MEG **MAY** be Up MEPs or Down MEPs, as required by the situation.

Instantiation of a Test MEG may impact lower-level MEGs that extend past the Test MEG location. If the SP selects a point that is CE-VLAN ID aware and a MEP at that point breaks the MEG nesting rules of SOAM, lower level MEGs may be adversely affected. Instantiation of a Test MEG may also have an adverse impact on MIPs in a higher-level MEG than the Test MEG.

### 7.5.1 Limitations

The Test MEG as specified in this IA has some significant limitations. These include the ability to test only point-to-point configurations, having to place the Test MEG MEP in the SP network at a point that is CE-VLAN ID aware, and possibly impacting other lower or higher MEG Level MEs. For example, if the Test ME is instantiated in NE 7 as shown in Figure 3, the MIP at the Subscriber ME is impacted. In this case, the Test ME becomes the lowest ME without a MEP and therefore the MIP at the Subscriber ME is automatically deleted. The Test MEG's usefulness is also predicated on the agreement between the subscriber and the SP to implement it. This requires coordination of MEG ID, MEP ID, and other values either in advance or at the time that the SP determines they need to implement the Test MEG.

## 7.6 EVC MEG

An EVC MEG is intended to provide the most complete view of an EVC. The MEPs in an EVC MEG are to be placed as close to the UNI reference point as possible.

**[R14]** A UNI-N **MUST** be capable of enabling a MEP for the EVC MEG associated with each EVC.

**[R15]** A VUNI **MUST** be capable of enabling a MEP for the EVC MEG associated with each EVC.

**[D9]** By default, an EVC MEG **SHOULD** have an Up MEP placed in the UNI-N or VUNI.

**[R16]** An EVC MEG SOAM frame **MUST** have a C-tag when a C-VID is necessary to determine the EVC to which the frame belongs.[3]

**[D10]** When a C-VID is not necessary, an EVC MEG SOAM frame **SHOULD** not have a C-tag.

[2] In the case of a Link Aggregation Group (LAG), the "port" would be the LAG, not a single physical port. See section 9.1 for more details.

[3] See also the MIB attribute dot1agCfmDefaultMdPrimaryVid in IEEE 802.1Q [3] for which C-tag to use when multiple C-tags are possible.


© The Metro Ethernet Forum 2013. Any reproduction of this document, or any portion thereof, shall contain the following statement: "Reproduced with permission of the Metro Ethernet Forum." No user of this document is authorized to modify any of the information contained herein.

**[D11]** An ENNI-N **SHOULD** be capable of enabling a MIP on any EVC MEG transiting the ENNI.

**[D12]** A UNI-N **SHOULD** be able to support a minimum number of EVC MEPs, as prescribed in Table 4[4]:

| Link Speed | 10/100 M bits/s | 1 G bit/s | 10 G bit/s |
|---|---|---|---|
| **Minimum number of EVC MEPs** | 8 | 64 | 512 |

**Table 4 – Minimum Number of EVC MEPs at a UNI-N**

Note: Other system constraints may apply. For example, the total number of MEPs in the system may limit how many MEPs can be enabled simultaneously at multiple UNI-Ns.

## 7.7 Service Provider MEG

A Service Provider (SP) MEG is used to monitor an SP-EC (as defined in MEF12.1 [12]). Usually an SP MEG would monitor the same portion of a network as an EVC MEG (as shown in Figure 1), an Operator MEG, or both. However, there are circumstances where there is not a direct correspondence, such as when a UNI Tunnel Access (UTA) configuration is being used, as shown in Figure 5. When an SP MEG would not monitor the same portion of a network as an EVC MEG or an Operator MEG, an SP MEG is an appropriate monitoring tool.

The MEP and MIP placements corresponding to the MEGs shown in Figure 5 are illustrated with an example in Figure 6, which builds upon Figure 3 of MEF 28 [20]. (Additional details on MP placement are provided in Appendix I of MEF 12.1.1 [13].) Recall also that a UTA OVC, as defined in MEF 28, is always point to point, and therefore the UTA SP MEG always contains two MEPs.

Note: Either a Service Provider will require access to both end points of a UTA SP ME, or the Service Provider must coordinate the assignment of variables such as the MEG ID and MEP ID with the Operator that does have access to the far end of the ME.

[4] Similar to R24 of MEF 13 [14].


© The Metro Ethernet Forum 2013. Any reproduction of this document, or any portion thereof, shall contain the following statement: "Reproduced with permission of the Metro Ethernet Forum." No user of this document is authorized to modify any of the information contained herein.

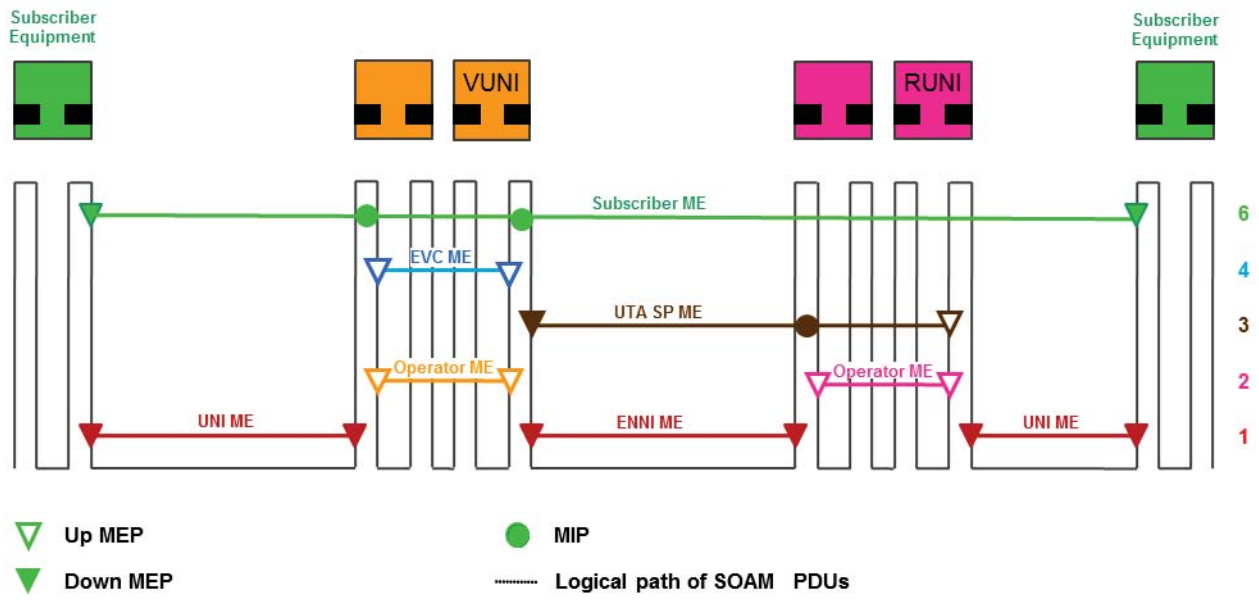


**Figure 5 – Example SP MEG With UTA**

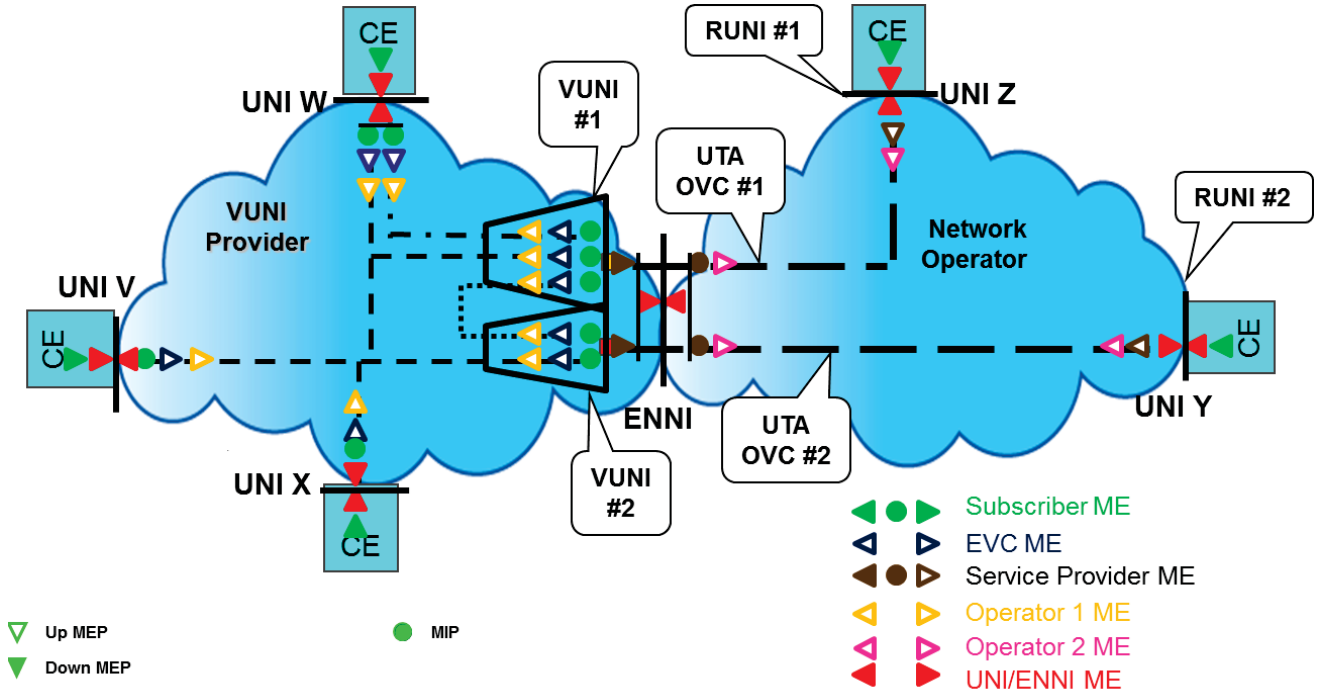


**Figure 6 – Example MP Placements With UTA**


© The Metro Ethernet Forum 2013. Any reproduction of this document, or any portion thereof, shall contain the following statement: "Reproduced with permission of the Metro Ethernet Forum." No user of this document is authorized to modify any of the information contained herein.

**[D13]** An ENNI-N **SHOULD** be capable of enabling a MIP on any SP MEG transiting the ENNI.

Note: The capabilities of **[D11]** and **[D13]** cannot both be instantiated on a given VLAN at a given ENNI-N at the same time.

**[D14]** The Access Provider **SHOULD** provision a MIP at an ENNI-N Access Provider side on the UTA SP MEG.

**[R17]** A UNI-N, VUNI, or RUNI **MUST** be capable of enabling a MEP on the SP MEG.

**[D15]** A MEP corresponding to a Service Provider MEG **SHOULD** be an Up MEP.

**[D16]** A MEP corresponding to a UTA SP MEG **SHOULD** be a Down MEP at a VUNI and an Up MEP at a RUNI.

Note: A suggested practice is for the SP to use a MEP ID default of 2 at an RUNI and 1 at a VUNI.

## 7.8 Operator MEG

If an Operator wishes to monitor an OVC, then the Operator MEG would be the appropriate MEG to use.

**[R18]** An ENNI-N **MUST** be capable of enabling a MEP on each Operator MEG terminating at the ENNI-N.

**[D17]** A MEP corresponding to the Operator MEG on an ENNI-N **SHOULD** be an Up MEP.

**[R19]** A UNI-N or VUNI **MUST** be capable of enabling a MEP on the Operator MEG associated with each EVC or OVC.

**[D18]** A MEP corresponding to the Operator MEG on a UNI-N or VUNI **SHOULD** be an Up MEP.

## 7.9 UNI MEG

The UNI MEG allows monitoring the connectivity between the UNI-C and the UNI-N. For non-LAG, port-based UNI MEGs, the desire is to support untagged SOAM frames. In the event that this is not supported, using tagged SOAM frames for a non-LAG, port-based UNI MEG is acceptable, if agreed to by both parties in the UNI MEG. For LAG-based UNI MEGs, tagged SOAM frames should be used as described in section 9.1.1.

**[R20]** A non-LAG, port-based UNI MEG **MUST** support untagged SOAM frames.

**[O2]** A port-based UNI MEG **MAY** support C-Tagged SOAM frames.

**[D19]** The UNI MEG **SHOULD** default to using untagged SOAM frames.

**[D20]** If tagged SOAM frames are used for the UNI MEG, then a default VLAN-ID of 4091 **SHOULD** be used in the C-Tag of the frames.

This IA neither requires nor prohibits support for per-service monitoring across a UNI.


© The Metro Ethernet Forum 2013. Any reproduction of this document, or any portion thereof, shall contain the following statement: "Reproduced with permission of the Metro Ethernet Forum." No user of this document is authorized to modify any of the information contained herein.

### 7.9.1 UNI-C MEP Requirements

**[R21]** A UNI-C **MUST** be able to support a MEP on the UNI MEG, regardless of whether any EVC is configured for that UNI or not.

**[D21]** When the CE implementing the UNI-C is an IEEE 802.1Q [3] Bridge, the MEP corresponding to the UNI MEG on a UNI-C **SHOULD** be a Down MEP.

### 7.9.2 UNI-N MEP Requirements

**[R22]** A UNI-N **MUST** be able to support a MEP on the UNI MEG, regardless of whether any EVC is configured for that UNI or not.

**[D22]** When the NE implementing the UNI-N is an IEEE 802.1Q [3] Bridge, the MEP corresponding to the UNI MEG on a UNI-N **SHOULD** be a Down MEP.

## 7.10 ENNI MEG

The ENNI MEG allows monitoring the connectivity between adjacent ENNI-Ns. For non-LAG, port-based ENNI MEGs, the desire is to support untagged SOAM frames. In the event that this is not supported, using tagged SOAM frames for a non-LAG, port-based ENNI MEG is acceptable, if agreed to by both parties in the ENNI MEG. For LAG-based ENNI MEGs, tagged SOAM frames should be used as described in section 9.1.1.

**[R23]** A non-LAG, port-based ENNI MEG **MUST** support untagged SOAM frames.

**[O3]** A port-based ENNI MEG **MAY** support S-Tagged SOAM frames.

**[D23]** If tagged SOAM frames are used for the ENNI MEG, then a default VLAN-ID of 4091 **SHOULD** be used in the S-Tag of the frames.

**[R24]** An ENNI-N **MUST** be able to support a MEP on the ENNI MEG, regardless of whether any EVC is supported across that ENNI or not.

**[D24]** A MEP corresponding to the ENNI MEG on an ENNI-N **SHOULD** be a Down MEP.

This IA neither requires nor prohibits support for per-service monitoring across an ENNI.

## 7.11 LAG MEG

The UNI LAG MEG and the ENNI LAG MEG are simply types of the UNI MEG and the ENNI MEG, respectively. Accordingly, the requirements for UNI MEGs apply to UNI LAG MEGs, and the requirements for ENNI MEGs apply to ENNI LAG MEGs, except requirements for port-based UNI / ENNI.

Specific requirements relating to LAG MEGs, and further information, can be found in section 9.1.1.


© The Metro Ethernet Forum 2013. Any reproduction of this document, or any portion thereof, shall contain the following statement: "Reproduced with permission of the Metro Ethernet Forum." No user of this document is authorized to modify any of the information contained herein.

## 7.12 LAG Link MEG

The LAG Link MEG is used to monitor an individual LAG link. A LAG Link MEG running across a UNI is known as a UNI LAG Link MEG. A LAG Link MEG running across an ENNI is known as an ENNI LAG Link MEG.

Specific requirements relating to LAG Link MEGs, and further information, can be found in section 9.1.2.


© The Metro Ethernet Forum 2013. Any reproduction of this document, or any portion thereof, shall contain the following statement: "Reproduced with permission of the Metro Ethernet Forum." No user of this document is authorized to modify any of the information contained herein.

# 8. Fault Management Protocols

This section lists the Service OAM Fault Management requirements that are protocol specific.

## 8.1 MEG ID / MAID

The MEG ID is required to be unique within a CEN, Operator's network, where an Operator and customer connect, or where two Operators interconnect. When a MEG has MEPs in more than one network, then all involved parties must agree to the naming format. This section proposes desired default formats, although any format can be used that is agreed upon by involved parties.

Although this IA generally uses the terminology of ITU-T Y.1731 [7], this section of the IA uses the Maintenance Association (MA) and Maintenance Association Identifier (MAID) terminology of IEEE 802.1Q [3] to clarify the formatting of the MEG ID / MAID.

As specified per IEEE 802.1Q, a MAID has two components consisting of the MD Name and the Short MA Name.

**[D25]** The Maintenance Domain Name Format field of the MAID **SHOULD** have a value of 1, as defined in Table 21-19 of IEEE 802.1Q, which indicates that the MD Name field is not present.

When the MD Name is not present, the format is as shown in Figure 7 below (from Table 21-18 of IEEE 802.1Q):

| Field | Octet |
|---|---|
| Maintenance Domain Name Format (1) | 1 |
| Short MA Name Format | 2 |
| Short MA Name Length | 3 |
| Short MA Name | 4 – (smanl [a] + 3) |
| 0 pad, if necessary | (smanl + 4) – 48 |

[a] Short MA Name Length.

**Figure 7 – MAID Field Format**

**[D26]** The Short MA Name Format Field of the MAID **SHOULD** support values of {1, 2, 3, 4, or 32}, as defined in Table 21-20 of IEEE 802.1Q.

**[D27]** The Short MA Name Format Field of the MAID **SHOULD** default to 2, which indicates a format of Character String.

**[D28]** The Short MA Name Field of the MAID **SHOULD** be uniquely related (but not necessarily equal) to the UNI ID, EVC ID, ENNI ID, or UTA OVC ID as follows:

a. Representative value of the UNI ID, shared by the Subscriber and Service Provider, for the default (untagged) UNI MEG.
b. Representative value of the EVC ID, shared as needed by the Service Provider and Operator, for the EVC MEG.


© The Metro Ethernet Forum 2013. Any reproduction of this document, or any portion thereof, shall contain the following statement: "Reproduced with permission of the Metro Ethernet Forum." No user of this document is authorized to modify any of the information contained herein.

c. Representative value of the EVC ID, shared as needed by the Subscriber and the Service Provider, for the Test MEG.
d. Representative value of the ENNI ID, shared by both Operators, for the default (untagged) ENNI MEG.
e. Representative value of the UTA OVC ID, shared by both Operators, for the UTA SP MEG.

Note: Using UNI ID or EVC ID values as the value for the Short MA Name may lead to truncation problems. MEF 10.2 [11] specifies that UNI ID and EVC ID attributes must be unique across the CEN, but does not specify a maximum length. MEF 16 [14] truncates the UNI ID and EVC ID to 100 and 64 octets, respectively, when mapping these attributes into information elements. As such, these MEF identifiers can be larger than can possibly fit into a Short MA Name[5], which has a maximum possible length of 48 octets, and truncation does not necessarily produce unique identifiers. However, there is no issue if the ID is at most 45 octets.

**[D29]** The UNI ID and EVC ID **SHOULD** be no longer than 45 octets.

Note: MEF 26.1 [19] specifies a maximum length of 45 bytes for the OVC ID.

## 8.2 Continuity Check

The following requirements apply to the implementation of the Continuity Check Message (CCM) function as an operation that runs on a MEP for service monitoring. These requirements define default protocol values and the protocol options that are required for MEF Service OAM.

**[R25]** MEPs **MUST** support the CCM messages and processes as defined in IEEE 802.1Q [3].

**[R26]** MEPs **MUST** have the capability to be administratively configured to enable and disable CCM transmissions.

**[D30]** CCM transmissions **SHOULD** be disabled by default on the Subscriber MEG, the Test MEG, the EVC MEG, the SP MEG, and the Operator MEG.

**[D31]** CCM transmissions **SHOULD** be enabled by default on the UTA SP MEG, the UNI MEG, ENNI MEG, and the LAG Link MEG.

The following requirements define the parameters that control CCM behavior.

**[R27]** The PCP of tagged CCM frames **MUST** be configurable.

**[D32]** The default value of the PCP of a tagged CCM frame **SHOULD** be a PCP value that yields the lowest frame loss objective for the EVC or OVC.

**[D33]** Untagged CCM frames **SHOULD** be transmitted with the highest priority supported by the NE.

**[R28]** A MEP **MUST** support the CCM PDU transmission periods of {*1 s*, *10 s*}.

**[D34]** The default CCM transmission period for a MEP in a UTA SP MEG, non-LAG UNI MEG, non-LAG ENNI MEG, or LAG Link MEG **SHOULD** be 1 second.

[5] See Table 21-18 of IEEE 802.1Q [3].


© The Metro Ethernet Forum 2013. Any reproduction of this document, or any portion thereof, shall contain the following statement: "Reproduced with permission of the Metro Ethernet Forum." No user of this document is authorized to modify any of the information contained herein.

**[D35]** The default CCM transmission period for a MEP in a MEG other than a UTA SP MEG, non-LAG UNI MEG, non-LAG ENNI MEG, or LAG Link MEG **SHOULD** be 10 seconds.

**[D36]** A MEP **SHOULD** support the CCM PDU transmission periods of {*3.33 ms*, *10 ms*, *100 ms*}.

Note: There may be a direct correlation between the CCM PDU transmission periods supported and the level of resiliency a network element can offer a specific EVC. Three consecutive CCM messages must be lost before a failure is detected across a specific MEG. For protection switching mechanisms that use CCM messages to detect connectivity failures across an ME (e.g., ITU-T G.8031, G.8032) a failure must be detected before any protection switching mechanisms can enable a new path through the network. E.g., to enact a protection switching mechanism that claims a maximum switching time of 50 ms and which uses CCMs to detect the failure, the CCM PDU transmission period must be 10 ms or less. Otherwise, just detecting the failure would take more than 50 ms.

**[D37]** A MEP **SHOULD** provide a count of the number of CCM frames transmitted.

**[D38]** A MEP **SHOULD** support the CC defect and fault alarm hierarchy specified in clause 20.1.2 of IEEE 802.1Q.

**[R29]** A UNI MEG MEP located at a UNI-N or at a UNI-C on a Type 2 UNI **MUST** support the CC defect and fault alarm hierarchy specified in clause 20.1.2 of IEEE 802.1Q.

**[CR1]<** **[D38]**The highest priority alarm **MUST** be made available to management.

**[CD1]<** **[D38]**The highest priority alarm **SHOULD** mask lower priority alarms.

**[R30]** A UNI MEG MEP located at a UNI-N or at a UNI-C on a Type 2 UNI **MUST** support the minimum CC fault priority level specified in IEEE 802.1Q for which a CC alarm will be generated.

Note: An alarm will be generated only if the fault has equal or greater priority than the minimum CC fault priority level.

**[CD2]<** **[D38]**The default minimum CC fault priority level **SHOULD** be set to RDI.

**[CR2]<** **[D38]**A MEP **MUST** support a CC fault alarm time and a CC fault reset time.

**[CD3]<** **[D38]**The default CC fault alarm time **SHOULD** be set to 2.5 seconds, as specified in 20.33.3 of IEEE 802.1Q.

**[CD4]<** **[D38]**The default CC fault reset time **SHOULD** be set to 10 seconds, as specified in 20.33.4 of IEEE 802.1Q.

This IA does not require any specific TLV in the CCM PDUs; however their use is recommended, including Sender ID (IEEE 802.1Q 21.5.3), Port Status (IEEE 802.1Q 21.5.4), and Interface Status (IEEE 802.1Q 21.5.5).


© The Metro Ethernet Forum 2013. Any reproduction of this document, or any portion thereof, shall contain the following statement: "Reproduced with permission of the Metro Ethernet Forum." No user of this document is authorized to modify any of the information contained herein.

A Sender ID TLV, if included, indicates the Chassis ID, the Management Domain, and the Management Address of the source of the CCM frame. Although including the management address of a remote device rather than just its MAC address can make the identification of the device possible in a large network where MAC addresses are not well-known, it is not recommended and is considered a security risk.

**[D39]** A MEP **SHOULD** include the Sender ID TLV in CCM PDUs by default.

**[D40]** The Management Domain field **SHOULD** be empty in the Sender ID TLV by default.

**[D41]** The Management Address field **SHOULD** be empty in the Sender ID TLV by default.

The Port Status and Interface Status TLVs indicate the bridging and interface statuses of the sender of the CCM. These can be used to indicate to the far end that the local UNI or ENNI interface is down. An example usage is to indicate customer-customer connectivity is failed even though the MEPs on the EVC MEG continue to receive CCMs.

**[D42]** A MEP **SHOULD** include the Port Status TLV in CCM PDUs by default.

**[D43]** A MEP **SHOULD** include the Interface Status TLV in CCM PDUs by default.

**[R31]** A MEP **MUST** include the Interface Status TLV in CCM PDUs on a UTA SP MEG by default.

**[R32]** A MEP located at a leaf in an E-Tree service **SHOULD NOT** report an alarm for a MEP at a remote leaf in the same MEG.[6]

### 8.2.1 Remote Defect Indication Signal

The following requirement applies to the implementation of the Ethernet Remote Defect Indication Signal (ETH-RDI) function as a communicative means for a MEP to indicate the presence of a defect condition to peer MEPs. This requirement defines default protocol values and the protocol options that are required for a compliant MEF Service OAM implementation. Note that this function requires the ETH-CC function to be enabled since RDI is an information element within the CCM PDU.

**[R33]** A MEP **MUST** support the RDI operations, information elements, and processes as defined in IEEE 802.1Q [3].

## 8.3 Loopback

The following requirements apply to the implementation of the Ethernet Loopback (ETH-LB) function as an operation that runs on-demand on a MEP for service troubleshooting. These

[6] One way to help accomplish this is by adding all MEPs to the dot1agCfmMaMepListTable, but only setting dot1agCfmMepDbRMepIsActive for root MEPs. For both MIB objects, see Table 17-11 of IEEE 802.1Q [3].


© The Metro Ethernet Forum 2013. Any reproduction of this document, or any portion thereof, shall contain the following statement: "Reproduced with permission of the Metro Ethernet Forum." No user of this document is authorized to modify any of the information contained herein.

requirements define default protocol values and the protocol options that are required for a compliant MEF Service OAM implementation.

For the purposes of this section, an LB Session is defined as a sequence that begins with management initiating the transmission of *n* periodic LBM PDUs from a MEP to a peer MIP or MEP. An LB Session ends normally when the last LBR PDU is received or incurs a timeout.

**[R34]** An MP **MUST** support the LBM/LBR messages and processes as defined in IEEE 802.1Q [3].

**[R35]** A MEP **MUST** support the ability to be administratively configured to initiate and stop LB Sessions.

The following requirements define the parameters that must be provided when initiating an LB Session.

**[R36]** A MEP **MUST** be configurable to use any Unicast MAC DA as the destination address of an LBM.

**[D44]** A MEP **SHOULD** also support multicast class 1 MAC destination addresses (see section 10.1 of ITU-T Y.1731 [7]).

**[R37]** A MEP **MUST** be able to process and respond to both Unicast and Multicast LBM frames.

**[D45]** A MEP that supports transmitting LBM frames with multicast MAC addresses **SHOULD** be able to report the originating MAC in at least one LBR sent in response to the LBM.

**[R38]** For each LB session using tagged LBM frames, the PCP of the tagged LBM frames **MUST** be configurable.

**[D46]** The default value of the PCP of a tagged LBM frame **SHOULD** be a PCP value that yields the lowest frame loss objective for the EVC or OVC.

Note: According to 802.1Q, the returned LBR has the same priority as the received LBM, which would therefore also default to be a PCP value with the lowest frame loss objective.

**[D47]** Untagged LBM/LBR frames **SHOULD** be transmitted with the highest priority supported by the NE.

**[D48]** For each LB session, the timeout for an expected LBR result after a LBM transmission **SHOULD** be configurable.

**[D49]** The default value of the LBR timeout **SHOULD** be 5 seconds.

**[R39]** The number of LBM transmissions to perform in an LB session **MUST** be configurable in the range of at least 1 through 1024.

**[D50]** The default value for the number of LBM transmissions in an LB session **SHOULD** be 3.

**[R40]** For an LB Session, the time interval between LBM transmissions **MUST** be configurable in the range of at least 0 seconds through 60 seconds.

Note: A value of 0 seconds indicates that the LBMs are to be sent with no enforced delay between them.


© The Metro Ethernet Forum 2013. Any reproduction of this document, or any portion thereof, shall contain the following statement: "Reproduced with permission of the Metro Ethernet Forum." No user of this document is authorized to modify any of the information contained herein.

**[D51]** For an LB Session, the time interval between LBM transmissions **SHOULD** be configurable with a granularity of at least 100 milliseconds.

**[R41]** For an LB Session, the time interval between LBM transmissions **MUST** be configurable with a granularity of at least 1 second.

**[D52]** The default value for the time interval between LBM transmissions in a LB Session **SHOULD** be 1 second.

**[R42]** For an LB Session, the size of the LBM frame **MUST** be configurable to any Ethernet frame size between 64 bytes and the maximum transmission unit of the EVC.

**[R43]** The Data TLV **MUST** be supported in LBMs/LBRs. The inclusion of the Data TLV in a specific LBM is dependent on the frame size requested.

**[D53]** The default value of the LBM frame size **SHOULD** be 64 bytes.

As with CCMs, a Sender ID TLV, if included, indicates the Chassis ID, the Management Domain, and the Management Address of the source of the LBM PDU. Although including the management address of a remote device rather than just its MAC address can make the identification of the device possible in a large network where MAC addresses are not well-known, it is not recommended. Including the management address, which gets sent in the clear, is considered a security risk.

**[D54]** A MEP **SHOULD** include the Sender ID TLV in the LBM PDUs by default.

**[D55]** The Management Domain field **SHOULD** be empty in the Sender ID TLV by default.

**[D56]** The Management Address field **SHOULD** be empty in the Sender ID TLV by default.

The following requirements define the Loopback information that is to be maintained for each LB session that is sent to a Unicast address.

**[R44]** For an LB Session, the initiating MEP **MUST** be able to report the number of LBMs transmitted and the number of LBRs received.

**[D57]** For an LB Session, the initiating MEP **SHOULD** be able to report the percentage of responses lost (timed out).

**[D58]** For an LB session, the round trip time (RTT) min/max/average statistics **SHOULD** be supported by the initiating MEP.

**[D59]** A responding MP **SHOULD** be able to report the aggregate number of LBMs received and the aggregate number of LBRs transmitted during a time period.

Note: The statistics that can be gleaned from LB RTT measurements can be useful for fault detection. For performance management, more precise measurements need to be used, as described in MEF 35 [24].


© The Metro Ethernet Forum 2013. Any reproduction of this document, or any portion thereof, shall contain the following statement: "Reproduced with permission of the Metro Ethernet Forum." No user of this document is authorized to modify any of the information contained herein.

## 8.4 Linktrace

The following requirements apply to the implementation of the Ethernet Linktrace (ETH-LT) function as an operation that runs on-demand on a MEP for service troubleshooting. These requirements define default protocol values and the protocol options that are required for a MEF-compliant Service OAM implementation.

**[R45]** An MP **MUST** support the LTM/LTR messages and processes as defined in IEEE 802.1Q [3].

**[R46]** The PCP of the tagged LTM frames **MUST** be configurable.

**[D60]** The default value of the PCP of a tagged LTM frame **SHOULD** be a PCP value that yields the lowest frame loss objective for the EVC or OVC.

Note: According to 802.1Q, the returned LTR has the same priority as a CCM, which would therefore also default to be a PCP value with the lowest frame loss objective.

**[D61]** Untagged LTM/LTR frames **SHOULD** be transmitted with the highest priority supported by the NE.

As with CCMs, a Sender ID TLV, if included, indicates the Chassis ID, the Management Domain, and the Management Address of the source of the LTM PDU. Although including the management address of a remote device rather than just its MAC address can make the identification of the device possible in a large network where MAC addresses are not well-known, it is not recommended. Including the management address, which gets sent in the clear, is considered a security risk.

**[D62]** A MEP **SHOULD** include the Sender ID TLV in the LTM PDUs by default.

**[D63]** The Management Domain field **SHOULD** be empty in the Sender ID TLV by default.

**[D64]** The Management Address field **SHOULD** be empty in the Sender ID TLV by default.

The following requirements define the Linktrace information that is to be maintained.

**[R47]** An initiating MEP **MUST** be able to report the number of LTMs transmitted and the number of LTRs received.

**[D65]** A responding MP **SHOULD** be able to report the number of LTMs received and the number of LTRs transmitted.

## 8.5 Alarm Indication Signal

The following requirements apply to the implementation of the Ethernet Alarm Indication Signal (ETH-AIS) function as an operation that runs following the detection of a fault. These requirements define default protocol values and the protocol options that are required for a MEF-compliant Service OAM implementation.

ETH-AIS exists to suppress alarms that might otherwise be raised at MEPs receiving AIS. It also exists to allow higher level MEGs to run slower CCMs by relying on AIS from link level (UNI


© The Metro Ethernet Forum 2013. Any reproduction of this document, or any portion thereof, shall contain the following statement: "Reproduced with permission of the Metro Ethernet Forum." No user of this document is authorized to modify any of the information contained herein.

or ENNI) MEGs that are running CCMs at a faster rate. Both of these can require additional coordination between providers when the sender and receiver of the AIS are in different management networks.

AIS is not intended to be used in multi-point services. Use of AIS in multi-point services is not recommended by this IA.

**[D66]** An MP **SHOULD** support the ETH-AIS operations, information elements, and processes as defined in ITU-T Y.1731 [7] and ITU-T G.8021 [6].

As defined in ITU-T Y.1731 and ITU-T G.8021, AIS is injected by a MEP in a given MEG, into one or more client MEGs. The MEG that the MEP injecting the AIS belongs to is referred to here as the "injecting MEG". A client MEG is conceptually the "next higher MEG" that encompasses the injecting MEG. This conceptual relationship can be realized in a number of ways. In the simplest case, the client MEG is the MEG at the next higher configured MEG Level above the injecting MEG. Alternatively, a client MEG could be a MEG whose CFM PDUs are "tunneled" at the injecting MEP's interface, because they are encapsulated in additional VLAN tags and hence are treated as service frames rather than SOAM frames (i.e., they belong to a different OAM Flow Space, see Appendix B).

In the latter case, there may be a number of client MEGs, each encapsulated with a different VID. There may be up to 4094 client MEGs (i.e., one per VID) if the client MEGs have one more VLAN tag than the injecting MEG; or up to 4094 * 4094 (i.e., 16,760,836) client MEGs if they have two more VLAN tags than the injecting MEG (for instance at an ENNI MEP). Where the client MEGs have additional VLAN tags, no relationship can be assumed between the MEG Level of the injecting MEG and the MEG Level of the client MEGs. In particular, the client MEG Level may be lower than the MEG Level of the injecting MEG.

**[CD5]<** **[D66]**AIS generation **SHOULD** be enabled at a MEP only if the MEP is capable of injecting AIS into all of its client MEGs.

Having determined the set of client MEGs, there are two ways that a MEP can inject AIS into each client MEG:

- If the client MEG has a MEP on the same interface as the injecting MEP, then injecting an AIS is a simple matter of passing an indication internally within the device from one MEP to the other. In this case, no AIS PDU is transmitted. This is referred to as an "AIS Indication". Note that as the client MEG is defined to be a MEG that encompasses the injecting MEG, the two MEPs will by definition face the same direction, i.e., both Up MEPs or both Down MEPs.
- If the client MEG does not have a MEP on the same interface as the injecting MEP, i.e., it has a MIP or has no MP at all, then injecting an AIS involves transmitting an AIS PDU at the client MEG Level, with the appropriate VLAN tags for the client MEG, in the opposite direction to that in which the MEP normally sends CFM frames (that is, an Up MEP would send AIS PDUs out towards the wire, and a Down MEP would send AIS PDUs in towards the bridging function). Note that in this case, the injecting MEP requires knowledge (e.g., by configuration) of the MEG Level and (where the client MEGs have additional VLAN tags) the primary VID for each client MEG.


© The Metro Ethernet Forum 2013. Any reproduction of this document, or any portion thereof, shall contain the following statement: "Reproduced with permission of the Metro Ethernet Forum." No user of this document is authorized to modify any of the information contained herein.

Examples showing various different cases of client MEGs can be found in Appendix D.

Each MEP is configured individually, and therefore the MEPs of a MEG may not necessarily all have the same configuration (either in terms of whether AIS is enabled or which MEGs to insert AIS into). An example of this is shown in Figure 8. In this case, both MEPs in the ENNI ME are configured to inject AIS to the SP ME. NE 2 and NE 3 inject AIS PDUs at the level of the SP ME, towards the SP ME MEPs in NE 1 and NE 4, respectively. The SP ME MEP in NE 1 injects an AIS indication to the EVC ME MEP in NE 1. This is called an AIS indication since it is not actually an AIS PDU but is some indication within the NE. The EVC ME MEP in NE1 is not configured to enable AIS, and hence it does not propagate the AIS to the Subscriber ME. In NE4, as in NE1, the SP ME MEP injects an AIS indication to the EVC ME MEP. However, unlike on NE1, on NE4 the EVC ME MEP is configured to enable AIS and hence it injects an AIS PDU at the level of the Subscriber ME, towards the Subscriber.

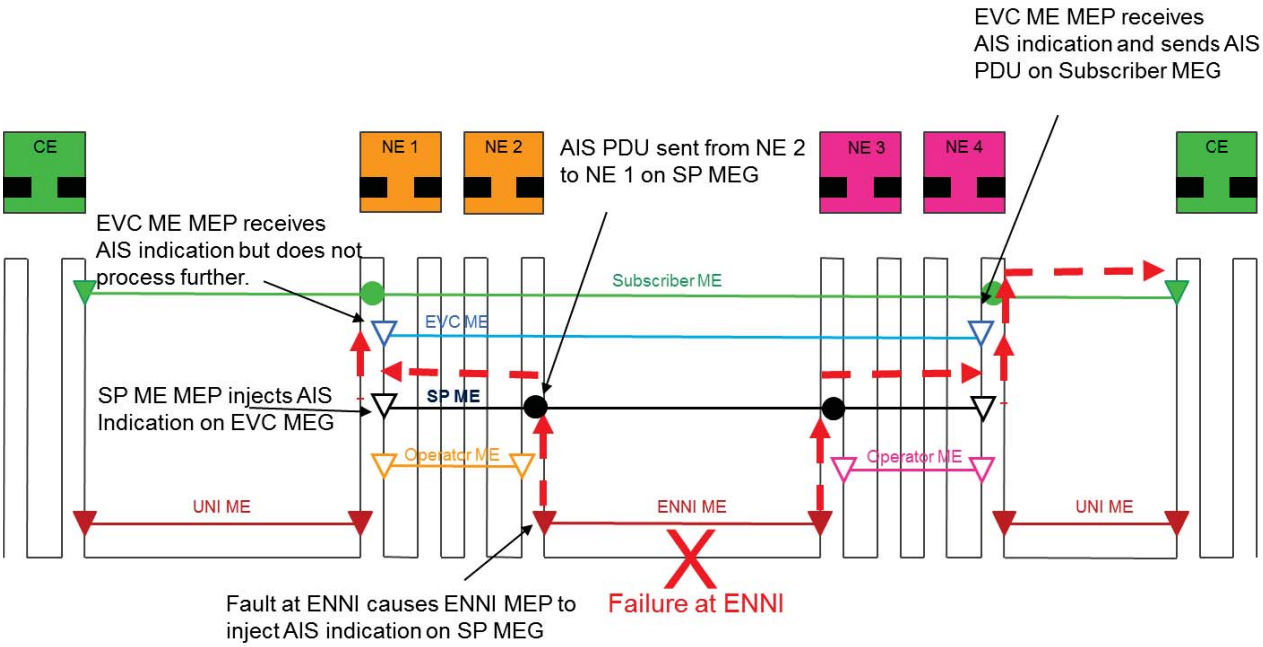


**Figure 8 – AIS Example 1**

Figure 9 provides an example of a different use case for AIS. In this case, the ENNI MEP on NE 3 is not configured to support AIS. Instead, the Operator ME MEP has an active Continuity Check process, and detects the port failure on the ENNI and sends an Interface Status TLV of isDown to the other MEP in the ME. The Operator ME MEP in NE 4 is configured to support AIS. The Interface Status TLV isDown status causes the Operator ME MEP to inject an AIS indication to the SP ME MEP, which in turn injects an AIS indication to the EVC ME MEP. The EVC ME MEP then injects AIS PDUs at the level of the Subscriber ME, towards the Subscriber ME MEP. This use case shows that not all devices in a CEN have to be configured to support AIS as long as key devices are configured to support it.


© The Metro Ethernet Forum 2013. Any reproduction of this document, or any portion thereof, shall contain the following statement: "Reproduced with permission of the Metro Ethernet Forum." No user of this document is authorized to modify any of the information contained herein.

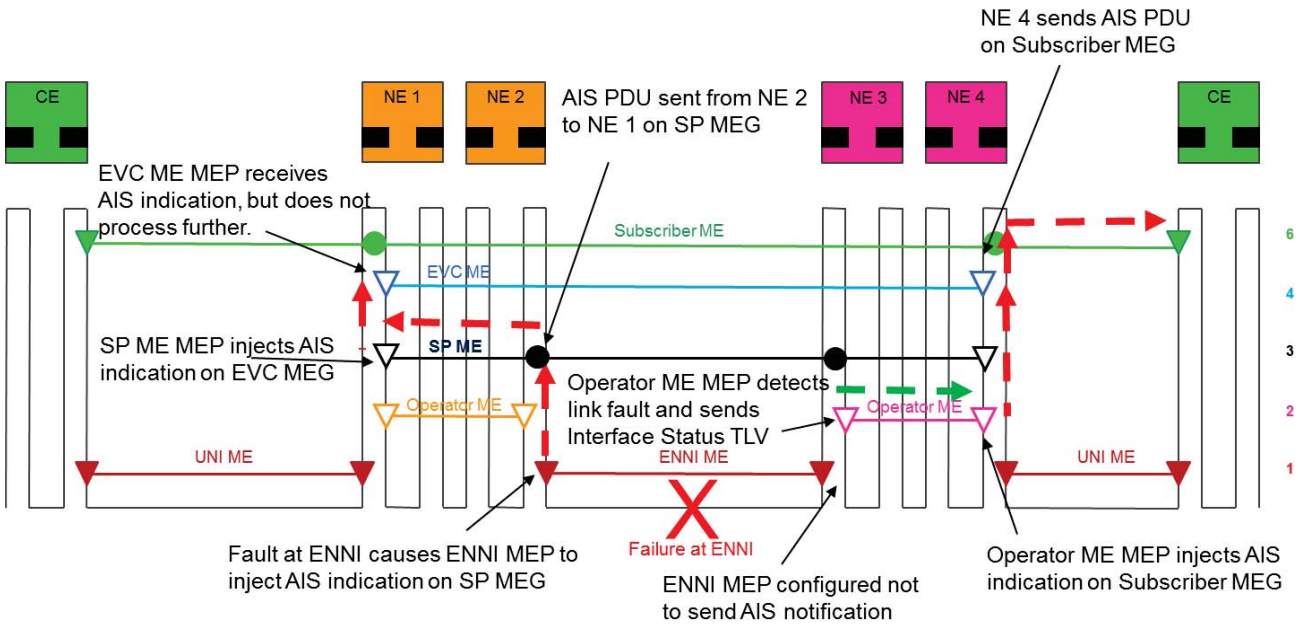


**Figure 9 – AIS Example 2**

**[CD6]<** **[D66]**The default value for the AIS PDU transmission period **SHOULD** be 1 second.

Note: In some cases it can be useful to send the first three AIS PDUs using a short transmission period (e.g., 3.33 ms or 10 ms) in order to enable quick alarm suppression and/or fast service protection on higher MEG Levels. AIS PDUs could be affected by changes in network topology that result from the same fault which is causing the AIS to be generated. By sending multiple PDUs during the initial second, the probability of the AIS PDU being received at the destination increases.

**[CD7]<** **[D66]**The default value of the PCP of a tagged AIS frame **SHOULD** be a PCP value that yields the lowest frame loss objective for the EVC or OVC.

**[CD8]<** **[D66]**Untagged AIS frames **SHOULD** be transmitted with the highest priority supported by the NE.

**[CD9]<** **[D66]**AIS transmissions SHOULD be disabled on a MEP by default.

**[CD10]<** **[D66]**Any condition that would cause RDI (see 8.2.1) to be sent in CCMs **SHOULD** also result in AIS transmission.

**[CD11]<** **[D66]**Receipt of AIS indication, AIS PDU, LCK indication, or LCK PDU **SHOULD** cause transmission of AIS frames if CCM is not enabled in the MEP receiving the AIS or LCK.

**[CO1]<** **[D66]**Receipt of AIS indication, AIS PDU, LCK indication, or LCK PDU **MAY** cause transmission of AIS frames if CCM is enabled in the MEP receiving the AIS or LCK.


© The Metro Ethernet Forum 2013. Any reproduction of this document, or any portion thereof, shall contain the following statement: "Reproduced with permission of the Metro Ethernet Forum." No user of this document is authorized to modify any of the information contained herein.

Note: Generating AIS on receipt of AIS or LCK when CCM is enabled can help propagate the defect condition more quickly than waiting for a CCM timeout. However, this goes beyond the recommendations in ITU-T G.8021 [6].

**[CO2]<** **[D66]**Receipt of RDI MAY cause AIS injection.

**[CD12]<** **[D66]**For down MEPs, interface down events or other lower-level faults **SHOULD** cause AIS indication or transmission to the client.

Note: Server MEPs are not within the scope of these requirements.

**[CD13]<** **[D66]**AIS injections **SHOULD** be enabled only on MEPs in point to point MEGs.

**[CR3]<** **[D66]**A MEP **MUST** support configuration of the client MEG(s) to which AIS indication or transmission is to be sent.

Note: How configuration of the client MEG(s) is done is a local matter. It could be by configuration of a list of VLAN IDs and associated MEG Levels, by automatic determination, or by other means.

**[CR4]<** **[D66]**AIS **SHOULD NOT** be configured to be injected into any client MEGs that are not point-to-point.

**[CR5]<** **[D66]**If an AIS PDU needs to be generated, then the AIS PDU **MUST** be sent to the multicast Class 1 address[7] for the configured level(s).

**[CO3]<** **[D66]**Although the primary reason for using AIS is to suppress alarm generation, reception of an AIS **MAY** be used as a defect indication to trigger RDI (at alarm level priority of MACStatus) and other mechanisms beyond the scope of this document, including, but not limited to protection.

## 8.6 Locked Signal

The following requirements apply to the implementation of the Ethernet Locked Signal (ETH-LCK) function as a communicative means for a MEP receiving a Locked signal to differentiate between an administratively locked MEP and a defect condition. These requirements define default protocol values and the protocol options that are required for a compliant MEF Service OAM implementation.

LCK is not intended to be used in multi-point services. Use of LCK in multi-point services is not recommended by this IA.

The selection of which client MEGs on which ETH-LCK should be sent is decided and configured in the same manner as for ETH-AIS. From each locked MEP, LCK PDUs are sent in both directions on the client MEGs. Figure 10 shows an example of this where ETH-LCK is asserted at an Operator MEP and LCK PDUs are sent on the client SP MEG. When ETH-LCK is asserted, client traffic is blocked at the point of LCK insertion, but not SOAM PDUs at the same level as the ETH-LCK level. For more information, see Section 7.6 of ITU-T Y.1731 [7]. Assertion of

[7] See Section 10.1 of ITU-T Y.1731 [7].


© The Metro Ethernet Forum 2013. Any reproduction of this document, or any portion thereof, shall contain the following statement: "Reproduced with permission of the Metro Ethernet Forum." No user of this document is authorized to modify any of the information contained herein.

ETH-LCK is controlled by an internal admin state, MI_Admin_State, defined in ITU-T G.8021 [6].

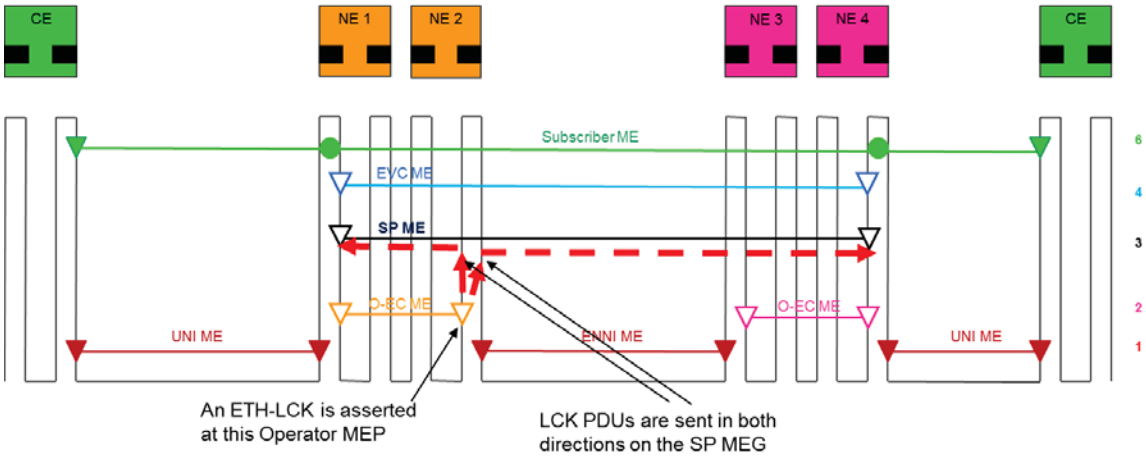


**Figure 10 – LCK Example**

**[D67]** A MEP **SHOULD** support the ETH-LCK operations, information elements, and processes as defined in ITU-T Y.1731 and ITU-T G.8021.

**[CD14]<** **[D67]**The default value for the LCK PDU transmission period **SHOULD** be 1 second.

**[CD15]<** **[D67]**The default value of the PCP of a tagged LCK frame **SHOULD** be a value that yields the lowest frame loss objective for the EVC or OVC.

**[CD16]<** **[D67]**Untagged LCK frames **SHOULD** be transmitted with the highest priority supported by the NE.

**[CD17]<** **[D67]**LCK injections **SHOULD** be enabled only on MEPs in point to point MEGs.

**[CD18]<** **[D67]**LCK generation **SHOULD** be enabled at a MEP only if the MEP is capable of injecting LCK into all of its client MEGs.

**[CD19]<** **[D67]**LCK **SHOULD NOT** be configured to be injected into any client MEGs that are not point-to-point.

**[R48]** If ETH-Test is supported for out of service diagnostic testing, then ETH-LCK **MUST** be supported.

## 8.7 Test Signal

The following requirements apply to the implementation of the Ethernet Test Signal (ETH-Test) function as a means for performing one-way in-service or out-of-service diagnostic testing between a pair of MEPs. These requirements define default protocol values and the protocol options that are required for a compliant MEF Service OAM implementation. Note that, as specified in ITU-T Y.1731 [7], when performing out-of-service diagnostic testing, the ETH-LCK


© The Metro Ethernet Forum 2013. Any reproduction of this document, or any portion thereof, shall contain the following statement: "Reproduced with permission of the Metro Ethernet Forum." No user of this document is authorized to modify any of the information contained herein.

is used in conjunction with ETH-Test. (However, note that ETH-LCK can be used without ETH-Test.)

Based on MEP placement within a device, the ability to measure throughput using the ETH-Test functionality may be limited. MEPs monitoring "green" (in-profile) frames need to be placed in locations where "green" (in-profile) frames can be measured. Figure 11 illustrates two EVCs across a UNI, one consisting of a single C-Tagged flow (EVC-X) and another consisting of two C-Tagged flows (EVC-Y). For measurements taken from a Service Provider or Operator perspective, MEPs need to be placed on the CEN side of the bandwidth profile function associated with the ESCF for the UNI-N. This corresponds to MEPs associated with SP, EVC, or Operator MEGs. For measurements taken from a Subscriber perspective, MEPs need to be placed on the UNI side of the ESCF for the UNI-C. This corresponds to MEPs associated with Test or Subscriber MEGs. (Additional details on MEP placement are provided in Appendix I of MEF 12.1.1 [13].).

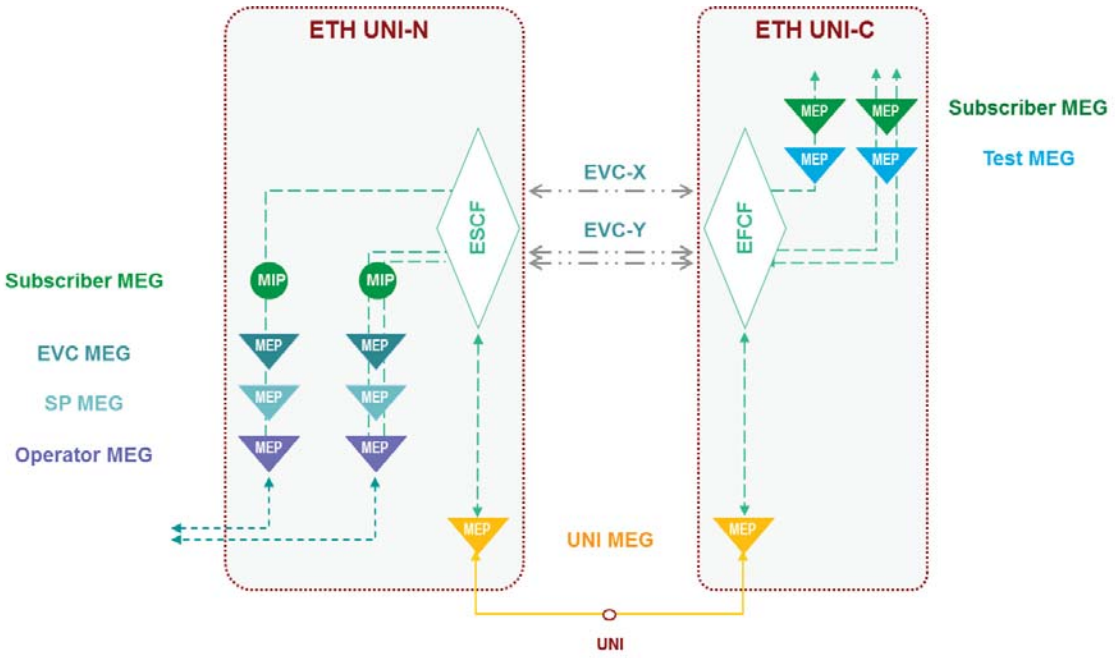


**Figure 11 – MEP Placement**

Furthermore, it should be noted that the ETH-LB function with a test pattern in the Data TLV could be used instead of the ETH-Test functionality to perform the same testing, although it may create additional stress on the OAM processor. This may be preferable to the ETH-Test functionality since it can be performed as a single-ended test[8]. For this reason, ETH-Test is not required.

[8] The one-way testing that can be accomplished with ETH-Test could be accomplished by recording the information from incoming LBM frames at one end and comparing them (or at least a count of them) to incoming LBR frames at the other end.


© The Metro Ethernet Forum 2013. Any reproduction of this document, or any portion thereof, shall contain the following statement: "Reproduced with permission of the Metro Ethernet Forum." No user of this document is authorized to modify any of the information contained herein.

Additional tools that could be used instead of the ETH-Test functionality, like ETH-LM or ETH-DM (as defined in ITU-T Y.1731), are outside the scope of this document.

**[O4]** A MEP **MAY** support the ETH-Test operations, information elements, and processes as defined in ITU-T Y.1731 and ITU-T G.8021 [6].

**[CD20]<** **[O4]**When ETH-Test is supported for in-service diagnostic testing, the default value of the PCP of a tagged Test frame **SHOULD** be a value that yields the lowest frame loss objective for the EVC or OVC.

**[CD21]<** **[O4]**Untagged Test frames **SHOULD** be transmitted with the highest priority supported by the NE.

## 8.8 Client Signal Fail

The following requirements apply to the implementation of the Ethernet Client Signal Fail (ETH-CSF) function as a means for informing a peer MEP of the detection of a failure or defect in communication with a client when the client itself does not support a means of notification to its peer, such as ETH-AIS or the RDI function of ETH-CC. The use of ETH-CSF is illustrated in Figure 12. These requirements define default protocol values and the protocol options that are required for a compliant MEF Service OAM implementation.

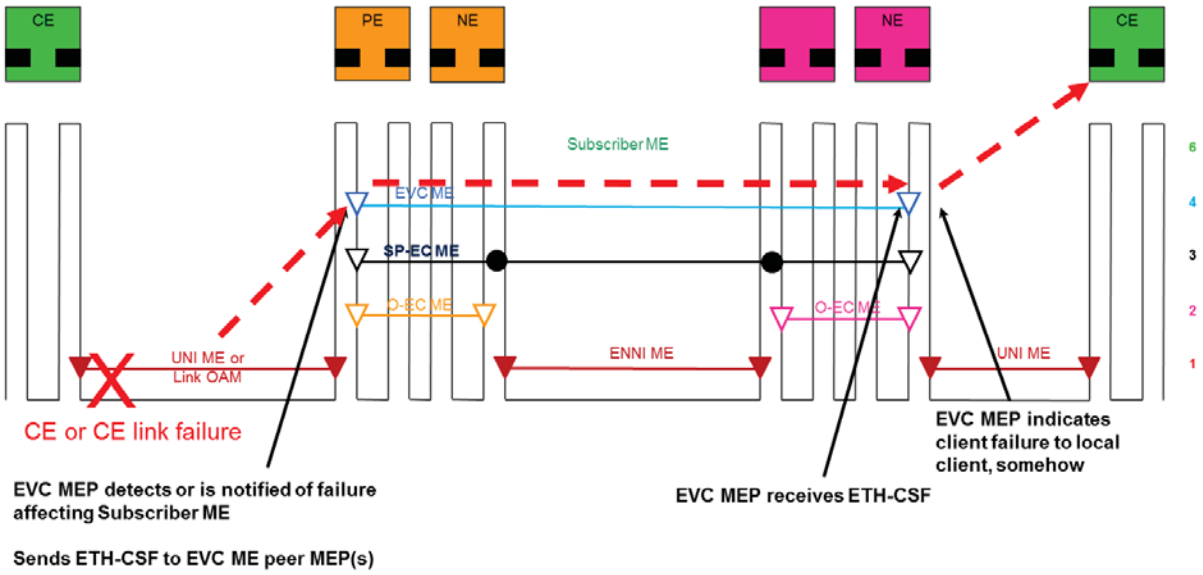


**Figure 12 – CSF Example**

**[O5]** A MEP **MAY** support the ETH-CSF operations, information elements, and processes as defined in ITU-T Y.1731 [7] and ITU-T G.8021 [6]

**[CD22]<** **[O5]**ETH-CSF transmissions **SHOULD** be disabled on a MEP by default.


© The Metro Ethernet Forum 2013. Any reproduction of this document, or any portion thereof, shall contain the following statement: "Reproduced with permission of the Metro Ethernet Forum." No user of this document is authorized to modify any of the information contained herein.

**[CD23]<** **[O5]**ETH-CSF transmissions **SHOULD** be enabled only on MEPs in point to point MEGs.

**[CR6]<** **[O5]**Transmission periods of 1 second and 1 minute **MUST** be supported for ETH-CSF.

**[CD24]<** **[O5]**The ETH-CSF default transmission period SHOULD be 1 second.

Note 1: Conditions under which ETH-CSF is sent are a local matter not defined by this document. Most of these conditions would also result in an Interface Status TLV being sent with a status of "link down" if CCMs are enabled and the Interface Status TLV is included, as described in section 8.2.

Note 2: What is done with a received ETH-CSF is a local matter not defined by this document.


© The Metro Ethernet Forum 2013. Any reproduction of this document, or any portion thereof, shall contain the following statement: "Reproduced with permission of the Metro Ethernet Forum." No user of this document is authorized to modify any of the information contained herein.

# 9. SOAM FM Interaction With Other Protocols

SOAM FM does not exist in isolation from other protocols. This section describes how SOAM FM interacts with other protocols of interest, specifically Link Aggregation and E-LMI.

## 9.1 SOAM FM Interaction with Link Aggregation

Link Aggregation (LinkAgg), as defined in IEEE 802.1AX [2] provides a protection mechanism for Ethernet facilities, and the ability to support higher bandwidth than provided by a single facility. In this discussion, we are concerned with only the support of protection mechanisms. LinkAgg has been defined to be supported on ENNIs in MEF 26.1 [19] and on UNIs in MEF 20 [17]. Because the requirements for LinkAgg within MEF 26.1 are more detailed than those in MEF 20, the SOAM FM structure is built around the requirements for LinkAgg on ENNIs. ENNI LinkAgg is specified in MEF 26.1 to always use Link Aggregation Control Protocol (LACP) and to be in the Active/Standby mode when used for ENNI protection. This means that one link is in the active mode (carrying traffic), and one link is in the standby mode (not carrying traffic).

Managing LinkAgg for faults consists of two pieces. The first piece is the traffic traversing the Link Aggregation Group (LAG) as a whole. Determining when there is a loss of connectivity across the LAG is very important so that the MEPs associated with the EVCs and OVCs affected by the loss of connectivity can be notified of the fault. In turn, this information can be used by these MEPs to propagate AIS and to limit the number of alarms generated within the network. A method of determining when traffic is not traversing a LAG is required. Using SOAM FM to manage connectivity across the LAG is the recommended way of doing this. For an ENNI that supports LAG, the ENNI ME is used to verify this connectivity. The ENNI ME is not used at the link level, but instead is configured over the LAG as a whole. The UNI ME is used to verify connectivity of a LAG at a UNI. When LinkAgg is used internally to a provider's network, the ME to use to monitor an INNI is beyond the scope of this document.

The second piece of a LinkAgg that requires management is the individual links that make up the LAG. The state of these links is important to the operation of the LAG. If a link fails and that failure goes undetected, the protection provided by the LAG may be compromised in the event of a second link failure. Using the ENNI as an example, there are two links in a LAG, as specified in MEF 26.1. There are two methods that can be used to verify the state of these links: Link OAM as defined in Clause 57 of IEEE 802.3 [4], and SOAM FM. However, the ability to pass link OAM status may be unknown, such as when the two end points of the LAG are not directly connected. An additional concern is that while Link OAM PDUs may pass successfully between the two LAG end points, the speed of fault detection provided by Link OAM may not be fast enough to meet the requirements for External Interfaces (EI) fault detection and switching. A requirement for switching between EIs in <500 ms is provided in MEF 32 [22]. A desirable requirement to switch between EIs in <250 ms has also been provided in MEF 32. To meet these objectives, a fast protocol detecting a fault on the link may be required. It is not believed that Link OAM can meet the lower of these objectives. A LAG group is informed quickly of some catastrophic failures, but some more subtle failures (that can be detected by CCMs) are not detected quickly. The protocol does not exchange status messages fast enough to detect a fault and perform the switching in the allotted time period. To ensure that the links that make up the


© The Metro Ethernet Forum 2013. Any reproduction of this document, or any portion thereof, shall contain the following statement: "Reproduced with permission of the Metro Ethernet Forum." No user of this document is authorized to modify any of the information contained herein.

LAG can be managed regardless of any intermediate devices between the two LAG endpoints and that the switching timeframe objectives for EIs are met, it is recommended that SOAM FM be used to manage these links. It is also recommended that AIS not be activated on the MEGs managing individual links that make up a LAG. This is because a single link failure does not represent a LAG failure and if individual links in the LAG generated AIS, false failures could be indicated to client levels.

### 9.1.1 LAG Fault Management

Managing the traffic traversing a LAG ensures that data frames are actually able to cross the LAG and that the LAG is providing protection to traffic. To verify the LAG's ability to pass traffic, CCMs must be generated so that they traverse the LAG. To do this, MEPs must be placed on the LAG itself, as opposed to individual LAG links. The CC Interval used to manage the LAG must be fast enough to quickly identify a fault on the LAG, but must be slow enough so that switching of traffic between links takes place before a fault is declared on the ME traversing the LAG. If the ME traversing the LAG declares a fault too quickly, traffic may still be protected by the LAG, and a false failure indication could be reported. The ME that monitors the LAG at a UNI or ENNI is the UNI ME or ENNI ME, respectively, and therefore uses MEG Level 1 as a default and is subject to the requirements specified in 7.9 or 7.10, respectively. Additional MEs can monitor the individual links of the LAG as shown in Figure 13.

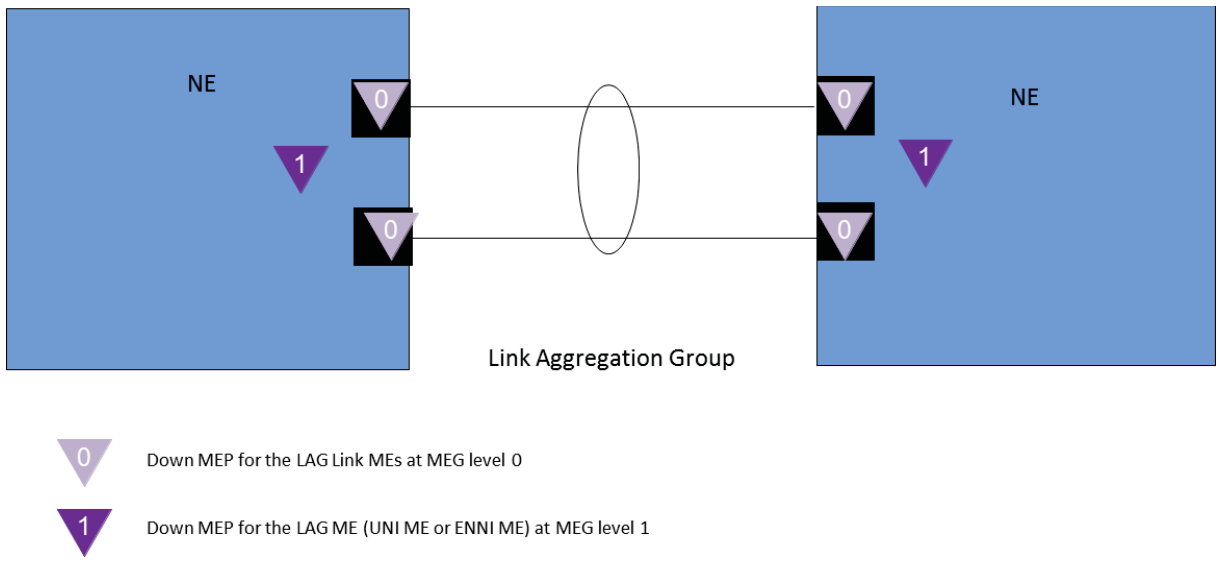


**Figure 13 – LinkAgg MEPs**

By verifying that traffic is traversing the LAG, in the event of a fault on the LAG, notification of the fault can be generated. This could be a simple trap or could involve using AIS to indicate the fault to and suppress alarms in a client MEG. Using the ENNI example, a fault detected by the ENNI ME can result in AIS being inserted into a higher level MEG, perhaps the SP ME, to suppress alarms at MEGs on OVCs or EVCs. See 8.5 for more details.


© The Metro Ethernet Forum 2013. Any reproduction of this document, or any portion thereof, shall contain the following statement: "Reproduced with permission of the Metro Ethernet Forum." No user of this document is authorized to modify any of the information contained herein.

**[D68]** A LAG **SHOULD** support a LAG MEG to monitor the LAG.

A LAG MEG is either a UNI MEG or an ENNI MEG, and therefore the requirements in sections 7.9 or 7.10 apply, except as described below.

**[CD25]<** **[D68]**A LAG MEG SHOULD use tagged SOAM frames.

Note: Section 22.1.8 of IEEE 802.1Q [3] recommends that MEPs on a LAG be VLAN-based. Therefore there is no requirement that a LAG MEG be able to support the use of untagged SOAM PDUs.

**[CR7]<** **[D68]**The CC Interval of a LAG MEG **MUST** be greater than the switching interval of the LAG.

**[CR8]<** **[D68]**CCMs generated by MEPs in a LAG MEG **MUST** use the same source MAC address as has been implemented for the LAG.

### 9.1.2 Link Aggregation Link Management

Management of service affecting faults on a LAG link is similar to using SOAM FM to manage other Ethernet facilities. Based on the requirement for fast fault detection and to enable the management of the individual links that make up the LAG regardless of the capabilities to pass Link OAM states, SOAM FM is recommended for each link.

**[D69]** Each link of a LAG **SHOULD** support a LAG Link MEG for monitoring that link.

**[CR9]<** **[D69]**A LAG Link MEG **MUST** support untagged SOAM frames.

**[CR10]<** **[D69]**A LAG Link MEG **MUST** have a down MEP at each end of the Ethernet facility that makes up the link.

**[CR11]<** **[D69]**A LAG Link MEG **MUST** support a CC Interval of 100 ms.

Note: A CC Interval of 100 ms enables a fault detection time of approximately 300 ms, which is less than the mandatory switching timeframe of ≤500 ms specified in MEF 32 [22].

**[CD26]<** **[D69]**A LAG Link MEG SHOULD support a CC Interval of 10 ms.

Note: A CC Interval of 10 ms enables a fault detection time of approximately 30 ms, which is less than the optional switching timeframe of ≤250 ms specified in MEF 32.

**[CD27]<** **[D69]**The CC Interval **SHOULD** be the same for all LAG Link MEGs within a single LAG.

Note: Running a slower CC interval on a standby link could cause a failure on the standby link to not be detected as quickly as on the active link.

**[CR12]<** **[D69]**AIS **MUST** not be configured on MEPs within the LAG Link MEG. This is because a LAG link fault might not be a service affecting fault.


© The Metro Ethernet Forum 2013. Any reproduction of this document, or any portion thereof, shall contain the following statement: "Reproduced with permission of the Metro Ethernet Forum." No user of this document is authorized to modify any of the information contained herein.

**[CR13]<** **[D69]**The CCM state for each link in a LAG **MUST** be fed into the LinkAgg state machine. This ensures that a loss of connectivity is included in the switch decisions.

## 9.2 SOAM FM Interaction with E-LMI

Because customer equipment may exist that does not support SOAM FM but that does support Ethernet Local Management Interface (E-LMI, specified in MEF 16 [14]), it is useful to be able to interwork between E-LMI and SOAM FM. Interworking SOAM FM with E-LMI allows for faults detected by SOAM FM to be communicated to the subscriber via E-LMI. Of specific interest are faults detected on an EVC that can be communicated to the subscriber via the EVC Status Information Element defined in Section 5.3.3.7 of MEF 16. An example of this is shown in Figure 14. Communicated faults include loss of CCM, RDI, AIS, and other failure conditions defined in ITU-T G.8021 [6].

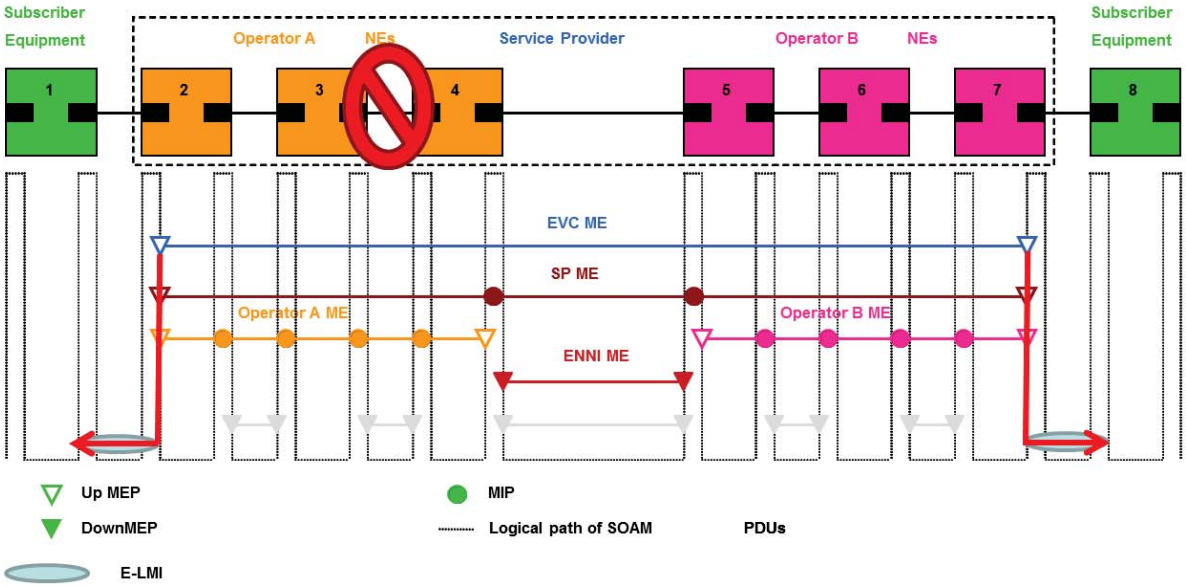


**Figure 14 – SOAM FM Interaction With E-LMI**

**[D70]** Interworking of SOAM FM to E-LMI **SHOULD** be performed at the UNI-N.

**[CR14]<** **[D70]**A fault detected by SOAM FM **MUST** result in an Asynchronous Status Message, as defined in Section 5.6.6 of MEF 16, being sent to from the UNI-N to the UNI-C.

**[CR15]<** **[D70]**An EVC Status Information Element **MUST** be included in all E-LMI Asynchronous Status Messages, indicating the current status of the EVC, as described in 9.2.1.

**[CR16]<** **[D70]**All other E-LMI operations dealing with the EVC Status Information Element defined in MEF 16 **MUST** be supported.


© The Metro Ethernet Forum 2013. Any reproduction of this document, or any portion thereof, shall contain the following statement: "Reproduced with permission of the Metro Ethernet Forum." No user of this document is authorized to modify any of the information contained herein.

### 9.2.1 EVC Status Information Element

E-LMI notifies subscriber equipment of the availability state of a configured EVC using the EVC Status Information Element, which can have values: Active, Not Active, or Partially Active. MEPs on the EVC MEG use the SOAM FM messages to determine the status of the EVC. This section describes the relationship between the SOAM FM information received by the MEP[9] at the EVC level, and the status of the EVC indicated by the E-LMI.

#### *9.2.1.1 EVC Active*

When an EVC has an E-LMI EVC Status of "Active", it is in the CE-VLAN ID/EVC Map and fully operational between all of the UNIs in the EVC. An EVC at a given UNI is in an "Active" state if all of the following are true:

- The MEP at the EVC MEG has all the variables someRDIdefect, xconCCMdefect, errorCCMdefect, and someRMEPCCMdefect (as defined in IEEE 802.1Q [3]) set to FALSE
- The MEP at the EVC MEG does not detect a LCK condition (as defined in ITU-T Y.1731 [7]
- The MEP at the EVC MEG does not detect an AIS condition (as defined in ITU-T Y.1731)
- The MEP at the EVC MEG has the variables rMEPportStatusDefect and rMEPinterfaceStatusDefect (as defined in IEEE 802.1Q) set to FALSE for all remote MEPs

#### *9.2.1.2 EVC Partially Active*

The E-LMI EVC Status of "Partially Active" is applicable for Multipoint-to-Multipoint EVCs. When a Multipoint-to-Multipoint EVC is "Partially Active", it is in the CE-VLAN ID/EVC Map and it is capable of transferring traffic among some but not all of the UNIs in the EVC. An EVC at a given UNI is in a "Partially Active" state if all of the bullets under Group 1 are true and at least one of the bullets under Group 2 are true.

Group 1:

- The MEP is in a multipoint-to-multipoint EVC
- The MEP at the EVC MEG has the variables xconCCMdefect and errorCCMdefect (as defined in IEEE 802.1Q [3]) set to FALSE

Group 2:

- The MEP at the EVC MEG has at least one of the following variables set to TRUE for at least one but not all of the remote MEP(s):
    - rMEPCCMdefect (as defined in IEEE 802.1Q)

[9] Unless mentioned otherwise, MEPs in this section refer to the local MEP at the same UNI-N as the E-LMI interface.


© The Metro Ethernet Forum 2013. Any reproduction of this document, or any portion thereof, shall contain the following statement: "Reproduced with permission of the Metro Ethernet Forum." No user of this document is authorized to modify any of the information contained herein.

  - rMEPportStatusDefect (as defined in IEEE 802.1Q)
  - rMEPinterfaceStatusDefect (as defined in IEEE 802.1Q)
- The MEP at the EVC MEG has rMEPlastRDI (as defined in IEEE 801Q) set to TRUE for at least one of the remote MEP(s)

#### *9.2.1.3 EVC Not Active*

When an EVC has an E-LMI EVC Status of "Not Active", it is in the CE-VLAN ID/EVC Map but not capable of transferring traffic among any of the UNIs in the EVC. An EVC at a given UNI is in a "Not Active" state if any of the following are true:

- For Point-to-Point EVCs only, the MEP at the EVC MEG detects an AIS defect condition as described in ITU-T Y.1731 [7]
- For Point-to-Point EVCs only, the MEP at the EVC MEG detects a LCK defect condition as described in ITU-T Y.1731
- The MEP at the EVC MEG has at least one of the following variables set to TRUE:
  - xconCCMdefect (as defined in IEEE 802.1Q [3]
  - errorCCMdefect (as defined in IEEE 802.1Q)
- The MEP at the EVC MEG has at least one of the following variables set to TRUE for every remote MEP:
  - rMEPCCMdefect (as defined in IEEE 802.1Q)
  - rMEPportStatusDefect (as defined in IEEE 802.1Q)
  - rMEPinterfaceStatusDefect (as defined in IEEE 802.1Q)

### 9.2.2 CFM to E-LMI Interworking with UTA

The UNI Tunnel Access (UTA) defined in MEF 28 [20] uses a Remote UNI (RUNI) which is not EVC aware. An example of this is shown in Figure 5, where faults detected by a UTA SP ME would be reflected into the IF Status TLV sent in CCMs by the EVC MEPs at the VUNI. The IF Status TLVs would then result in an E-LMI status of "Not Active" or "Partially Active" being sent over the UNI on the left side of the diagram. This allows normal interworking with E-LMI at the UNI-N in the presence of RUNIs.

If the following requirements are met, then it is possible for E-LMI to reflect accurately the state of the EVC at the UNI-N. However, a UNI-C connected to a RUNI cannot use E-LMI to know the state of its EVCs because more than one EVC may be associated with the UTA SP ME. Therefore, it is not possible for the RUNI to know the status of each EVC its directly connected UNI-C is sending service frames to. E-LMI cannot run on RUNI because the RUNI is not EVC aware.

**[CR17]<** **[D70]**The EVC MEPs present at a VUNI **MUST** reflect, in the Interface Status TLV of the CCMs they transmit, any fault detected by the UTA SP MEP on the VUNI, as described in the remainder of this section.


© The Metro Ethernet Forum 2013. Any reproduction of this document, or any portion thereof, shall contain the following statement: "Reproduced with permission of the Metro Ethernet Forum." No user of this document is authorized to modify any of the information contained herein.

#### 9.2.2.1 Interface Status isUP

The EVC MEPs present at a VUNI that are running CCM transmit an IF Status of isUp as defined in IEEE 802.1Q [3] when all of the following requirements are met:

- The MEP at the UTA SP MEG at the VUNI has the four variables someRMEPCCMdefect, someRDIdefect, xconCCMdefect, and errorCCMdefect, as defined in IEEE 802.1Q, set to FALSE
- The MEP at the UTA SP MEG at the VUNI does not detect a LCK condition, as defined in ITU-T Y.1731 [7]
- The MEP at the UTA SP MEG at the VUNI does not detect an AIS condition, as defined in ITU-T Y.1731
- The MEP at the UTA SP MEG at the VUNI has the variable rMEPportStatusDefect, as defined in IEEE 802.1Q, set to FALSE for the remote MEP
- The MEP at the UTA SP MEG at the VUNI has the variable rMEPinterfaceStatusDefect, as defined in IEEE 802.1Q, set to FALSE for the remote MEP

#### 9.2.2.2 Interface Status isDown

The EVC MEPs present at a VUNI that are running CCM transmit an IF Status of isDown as defined in IEEE 802.1Q [3] when any of the following requirements are met:

- The MEP at the UTA SP MEG at the VUNI has at least one of the three variables someRDIdefect, xconCCMdefect, and errorCCMdefect, as defined in IEEE 802.1Q, set to TRUE
- The MEP at the UTA SP MEG at the VUNI has at least one of the following variables set to TRUE for the remote MEP:
    - rMEPportStatusDefect, as defined in IEEE 802.1Q
    - rMEPCCMdefect, as defined in IEEE 802.1Q
    - rMEPinterfaceStatusDefect, as defined in IEEE 802.1Q
- The MEP at the UTA SP MEG at the VUNI detects an AIS defect condition as described in ITU-T Y.1731 [7]

#### 9.2.2.3 Interface Status isTesting

The EVC MEPs present at a VUNI that are running CCM transmit an IF Status of isTesting when the following requirements are met:

- None of the conditions of 9.2.2.2 are met
- The MEP at the UTA SP MEG at the VUNI detects a LCK defect condition as described in ITU-T Y.1731 [7]


© The Metro Ethernet Forum 2013. Any reproduction of this document, or any portion thereof, shall contain the following statement: "Reproduced with permission of the Metro Ethernet Forum." No user of this document is authorized to modify any of the information contained herein.

# 10. References


[1] IEEE 802.1ag, "Virtual Bridged Local Area Networks -- Amendment 5: Connectivity Fault Management", 2007 [Note: 802.1ag has been incorporated into and superseded by 802.1Q-2011.]

[2] IEEE 802.1AX, "Link Aggregation", 2008

[3] IEEE 802.1Q, "Virtual Bridged Local Area Networks", 2011

[4] IEEE 802.3, “Carrier sense multiple access with Collision Detection (CSMA/CD) Access Method and Physical Layer Specifications”, 2008

[5] IETF RFC 2119, “Key words for use in RFCs to Indicate Requirement Levels”, 1997

[6] ITU-T G.8021, “Characteristics of Ethernet Transport Network Equipment Functional Blocks”, 2012

[7] ITU-T Y.1731, "OAM functions and mechanisms for Ethernet based Networks", 2011

[8] MEF 4, “Metro Ethernet Network Architecture Framework – Part 1: Generic Framework”, 2004

[9] MEF 6.1, “Ethernet Services Definition – Phase 2”, 2008

[10] MEF 7.1, “EMS-NMS Information Model – Phase 2”, 2009

[11] MEF 10.2, “Ethernet Service Attributes – Phase 2”, 2009

[12] MEF 12.1, “Carrier Ethernet Network Architecture Framework Part 2: Ethernet Services Layer”, 2010

[13] MEF 12.1.1, “Carrier Ethernet Network Architecture Framework Part 2: Ethernet Services Layer, - External Interface Extensions”, 2011

[14] MEF 13, “User Network Interface (UNI) Type 1 Implementation Agreement”, 2005

[15] MEF 16, “Ethernet Local Management Interface”, 2006

[16] MEF 17, “Service OAM Requirements and Framework – Phase 1”, 2007

[17] MEF 20, “UNI Type II Implementation Agreement”, 2008

[18] MEF 23.1, “Carrier Ethernet Class of Service – Phase 2”, 2012

[19] MEF 26.1, “External Network Network Interface (ENNI) – Phase 2”, 2012

[20] MEF 28, “External Network Network Interface (ENNI) Support for UNI Tunnel Access and Virtual UNI”, 2010

[21] MEF 31, “Service OAM Fault Management Definition of Managed Objects”, 2011

[22] MEF 31.0.1, “Amendment to Service OAM SNMP MIB for Fault Management”, 2012

[23] MEF 32, “Requirements for Service Protection Across External Interfaces”, 2011

[24] MEF 35, “Service OAM Performance Monitoring Implementation Agreement”, 2012

[25] MEF 38, “Service OAM Fault Management YANG Modules”, 2012



© The Metro Ethernet Forum 2013. Any reproduction of this document, or any portion thereof, shall contain the following statement: "Reproduced with permission of the Metro Ethernet Forum." No user of this document is authorized to modify any of the information contained herein.

# 11. Appendix A – FM Scenarios [Informative]

This appendix describes a few of the possible failure scenarios that could occur, and how they would be dealt with.

### 11.1.1 UNI Failure

A UNI failure is any failure in the function of the UNI, including the equipment providing the UNI-C or UNI-N and the equipment providing communication between the UNI-C and UNI-N. There are two cases to consider, the single-hop UNI and the multi-hop UNI.

#### *11.1.1.1 UNI Without Intervening Bridges*

If the UNI is a single-hop, MEPs will detect the UNI failure if their MEGs include the UNI, or if they are positioned on the Ethernet interface of the UNI-C and UNI-N which realize the UNI. This is illustrated by Figure 15:

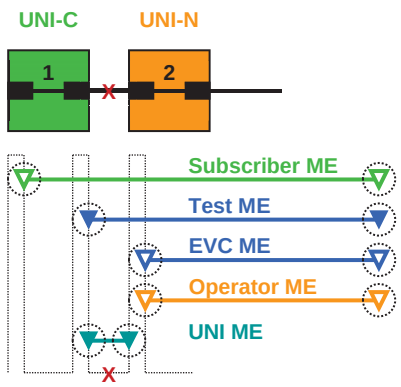


**Figure 15 – UNI Failure Without Intervening Bridges**

The Subscriber Up MEP on the UNI-C will not immediately detect the UNI failure since it is not positioned on the Ethernet interface which realizes the UNI. However, the MEP will be isolated and CCM, if running, will detect a loss of connectivity. The MEP and its peer MEP(s) will raise Remote MEP alarms. If CCM is running, the peer MEPs will also raise RDI (by setting the RDI bit in their CCM frames).

Note: Remote MEP alarms can be raised through the dot1agCfmFaultAlarm MIB attribute described in section 12.14.7.7, Table 17-1, and section 17.5 of IEEE 802.1Q [3].

The Test Down MEP on the UNI-C would detect the UNI failure. However, CCM is not expected to be running in the Test MEG and no further behavior is triggered.

The UNI-N will detect the UNI failure and the EVC Up MEP will report the fault to peer MEP(s) via CCM and the Interface Status TLV, if CCM is running. These peer MEP(s) will set MAC Status defects.


© The Metro Ethernet Forum 2013. Any reproduction of this document, or any portion thereof, shall contain the following statement: "Reproduced with permission of the Metro Ethernet Forum." No user of this document is authorized to modify any of the information contained herein.

Note: IEEE 802.1Q 20.33.6 defines the variable someMACstatusDefect. This can be useful to set because with an Up MEP, one can still send CCMs even with a defect in the equipment outside of the ME which the MEP the covers.

The Operator Up MEP on the UNI-N will detect the UNI failure and report the fault to peer MEP(s) via CCM and the Interface Status TLV. These peer MEP(s) will set MAC Status defects.

The UNI Down MEP on the UNI-C and UNI-N will detect the UNI failure. Furthermore, both MEPs will be isolated and CCM will detect a loss of connectivity. Both MEPs will raise Remote MEP alarms.

#### *11.1.1.2 UNI With Intervening Bridges*

If there are intervening bridges between the UNI-C and the UNI-N, and a failure occurs at an intermediate point (where SOAM protocols are not running), only those MEPs whose MEG spans the UNI will detect the UNI failure. This is illustrated by Figure 16.

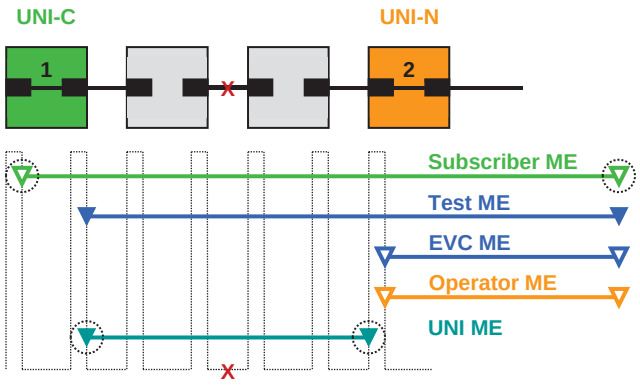


**Figure 16 – UNI Failure With Intervening Bridges**

The Subscriber Up MEP on the UNI-C will not immediately detect the UNI failure. However, the MEP will be isolated and CCM, if running, will detect a loss of connectivity. The MEP and its peer MEP(s) will raise Remote MEP alarms. The MEP and its peer MEP(s) will also raise RDI (by setting the RDI bit in their CCM SOAM PDUs).

The Test Down MEP, when present and operating on the UNI-C, would detect the UNI failure if CCM were to be running. However, CCM is generally not expected to be running on the Test MEG. Also, the Test MEP is not expected to always be present and operating, being often used for failure verification and not necessarily for failure detection (as per MEF 20 [17]).

The EVC Up MEP on the UNI-N will not detect the UNI failure.

The Operator Up MEP on the UNI-N will not detect the UNI failure.

The UNI Down MEP on the UNI-C and UNI-N will not immediately detect the UNI failure. However, both MEPs will be isolated and CCM will detect a loss of connectivity. Both MEPs will raise Remote MEP alarms.


© The Metro Ethernet Forum 2013. Any reproduction of this document, or any portion thereof, shall contain the following statement: "Reproduced with permission of the Metro Ethernet Forum." No user of this document is authorized to modify any of the information contained herein.

### 11.1.2 ENNI Failure

Upon an ENNI failure, a MEP on one side of the ENNI will be isolated from all peer MEP(s) on the other side of the ENNI, but not from peer MEP(s) on the same side of the ENNI.

MEPs will detect the ENNI failure if their MEG spans the ENNI, or if they are positioned on the Ethernet interface of the ENNI-N which realizes the ENNI. This is illustrated by Figure 17.

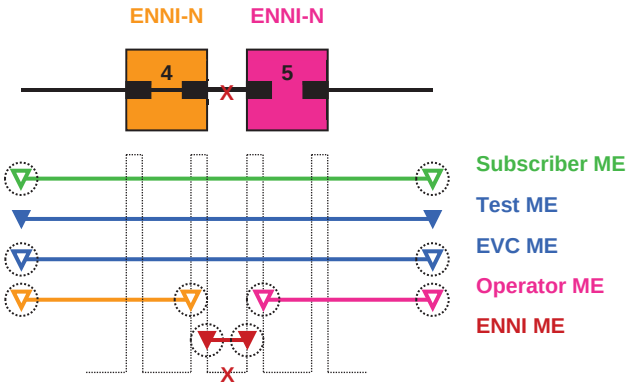


**Figure 17 – ENNI Failure**

The Subscriber Up MEP on the UNI-C will not immediately detect the ENNI failure since it is not positioned on the Ethernet interface which realizes the ENNI. However, the MEP will be at least partially isolated and CCM, if running, will detect a loss of connectivity. The MEP and its peer MEP(s) will raise Remote MEP alarms. The MEP and its peer MEP(s) will also raise RDI (by setting the RDI bit in their CCM frames).

The Test Down MEP on the UNI-C would detect the ENNI failure if CCM were to be running. However, CCM is generally not expected to be running on Test MEG.

The EVC Up MEP on the UNI-N will not immediately detect the ENNI failure. However, the MEP will be at least partially isolated and CCM will detect a loss of connectivity, if CCM is running. The MEP and its peer MEP(s) will raise Remote MEP alarms. The MEP and its peer MEP(s) will also raise RDI (by setting the RDI bit in their CCM frames).

The Operator Up MEP on the ENNI-N will detect the ENNI failure and report the fault to peer MEP(s) via CCM and the Interface Status TLV, if CCM is running. These peer MEP(s) will raise MAC Status defects.

The ENNI Down MEP on each ENNI-N will detect the ENNI failure. Furthermore, both MEPs will be isolated and CCM will detect a loss of connectivity. Both MEPs will raise Remote MEP alarms.


© The Metro Ethernet Forum 2013. Any reproduction of this document, or any portion thereof, shall contain the following statement: "Reproduced with permission of the Metro Ethernet Forum." No user of this document is authorized to modify any of the information contained herein.

### 11.1.3 Operator NE Failure

Upon the failure of an Operator Network Element or a Link, a MEP will be isolated from those peer MEP(s) that are only accessible via forwarding paths that traverse the failed Operator NE or Link.

Only those MEPs whose MEG spans the Operator NE will detect the NE failure. This is illustrated by Figure 18.

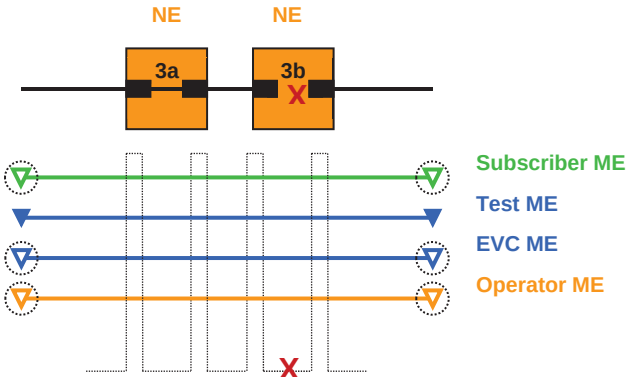


**Figure 18 – Operator NE Failure**

The Subscriber Up MEP on the UNI-C will not immediately detect the NE failure. However, the MEP will be at least partially isolated and CCM, if running, will detect a loss of connectivity. The MEP and its peer MEP(s) will raise Remote MEP alarms. The MEP and its peer MEP(s) will also raise RDI (by setting the RDI bit in their CCM frames).

The Test Down MEP on the UNI-C would detect the NE failure if CCM were to be running. However, CCM is generally not expected to be running on Test MEG.

The EVC Up MEP on the UNI-N will not immediately detect the NE failure. However, the MEP will be at least partially isolated and CCM will detect a loss of connectivity, if CCM is running. The MEP and its peer MEP(s) will raise Remote MEP alarms. The MEP and its peer MEP(s) will also raise RDI (by setting the RDI bit in their CCM frames).

The Operator Up MEP on the ENNI-N will not immediately detect the NE failure. However, the MEP will be at least partially isolated and CCM will detect a loss of connectivity, if CCM is running. The MEP and its peer MEP(s) will raise Remote MEP alarms. The MEP and its peer MEP(s) will also raise RDI (by setting the RDI bit in their CCM frames).


© The Metro Ethernet Forum 2013. Any reproduction of this document, or any portion thereof, shall contain the following statement: "Reproduced with permission of the Metro Ethernet Forum." No user of this document is authorized to modify any of the information contained herein.

# 12. Appendix B – VLAN Tagging Implications on SOAM Treatment [Informative]

This appendix reviews some different ways in which VLAN tagging may occur for Subscriber Service Frames, and discusses the implications on Service OAM flows in an 802.1ad network.

Figure 19 provides the reference diagram for this discussion. Here, NE 1 and NE 6 are owned by the Subscriber, while NE 2, NE 3, NE 4, and NE 5 are owned by a Service Provider and/or one or more Operators.

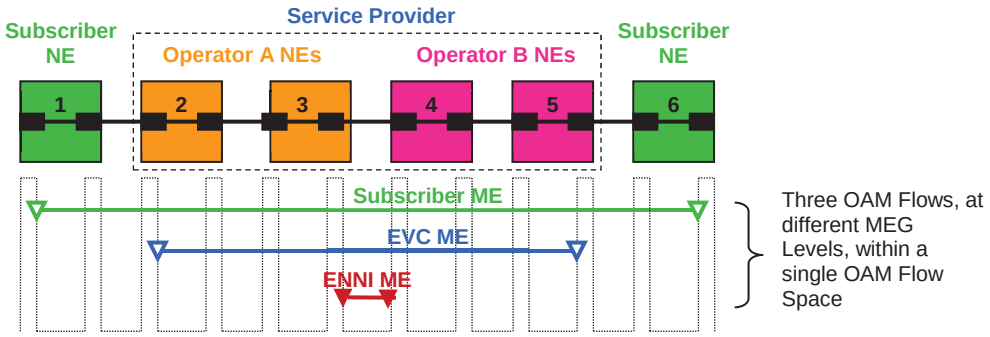


**Figure 19 – VLAN Tagging Reference Diagram**

At a UNI, the Subscriber can send into the Service Provider network:

- Untagged frames, or
- C-tagged frames.

If the network receives untagged frames, the Service Provider can transform the frame in many ways, including:

- Add a C-tag, or
- Add an S-tag, or
- Add both a C-tag and an S-tag.

If the network receives C-tagged frames, the Service Provider can transform the frame in many ways, including:

- Continue the C-tag and not add another tag, or
- Remove the C-tag and add an S-tag, or
- Add an S-tag to the C-tag, creating a double tagged frame.

This leads to several tagging cases, illustrated in Figure 20 below:


© The Metro Ethernet Forum 2013. Any reproduction of this document, or any portion thereof, shall contain the following statement: "Reproduced with permission of the Metro Ethernet Forum." No user of this document is authorized to modify any of the information contained herein.

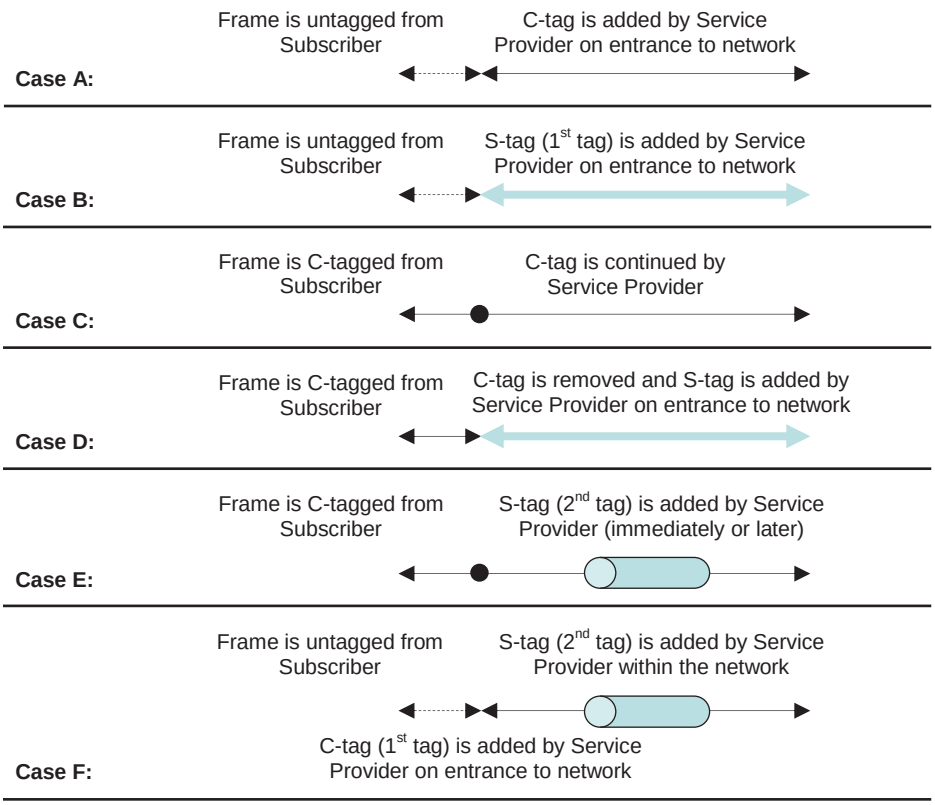


**Figure 20 – VLAN Tagging Cases**

In cases A, B, C, and D, a SOAM frame is initiated by the customer, and as it flows over the data path it continues to be processed and treated as a SOAM frame. These frames exist in the OAM Flow Space seen by the Service Provider and Operator. Therefore, MEG Levels used at any point can be seen by any other point in the path (subject to the IEEE 802.1Q [3] restrictions of the extent of various MEG Levels). Stated otherwise, different parties, such as the Service Provider and Operator, must coordinate the use of any levels that they share.

Cases E and F are different from the prior cases. The SOAM frames that were inserted in the untagged or single-tagged portions of the path are invisible to all points that are double tagged. This is because the double-tagged portion of the path (i.e., “the tunnel”) has hidden the fact that a frame is a SOAM frame with the addition of a second (outer) tag. These frames do not exist in the OAM Flow Space seen by the Service Provider and Operator. Within the double-tagging, SOAM frames can be inserted and they can use any desired MEG Level without having to consider the MEG Levels used by SOAM frames that use single tags.

This is illustrated for case F, in Figure 21 below:


© The Metro Ethernet Forum 2013. Any reproduction of this document, or any portion thereof, shall contain the following statement: "Reproduced with permission of the Metro Ethernet Forum." No user of this document is authorized to modify any of the information contained herein.

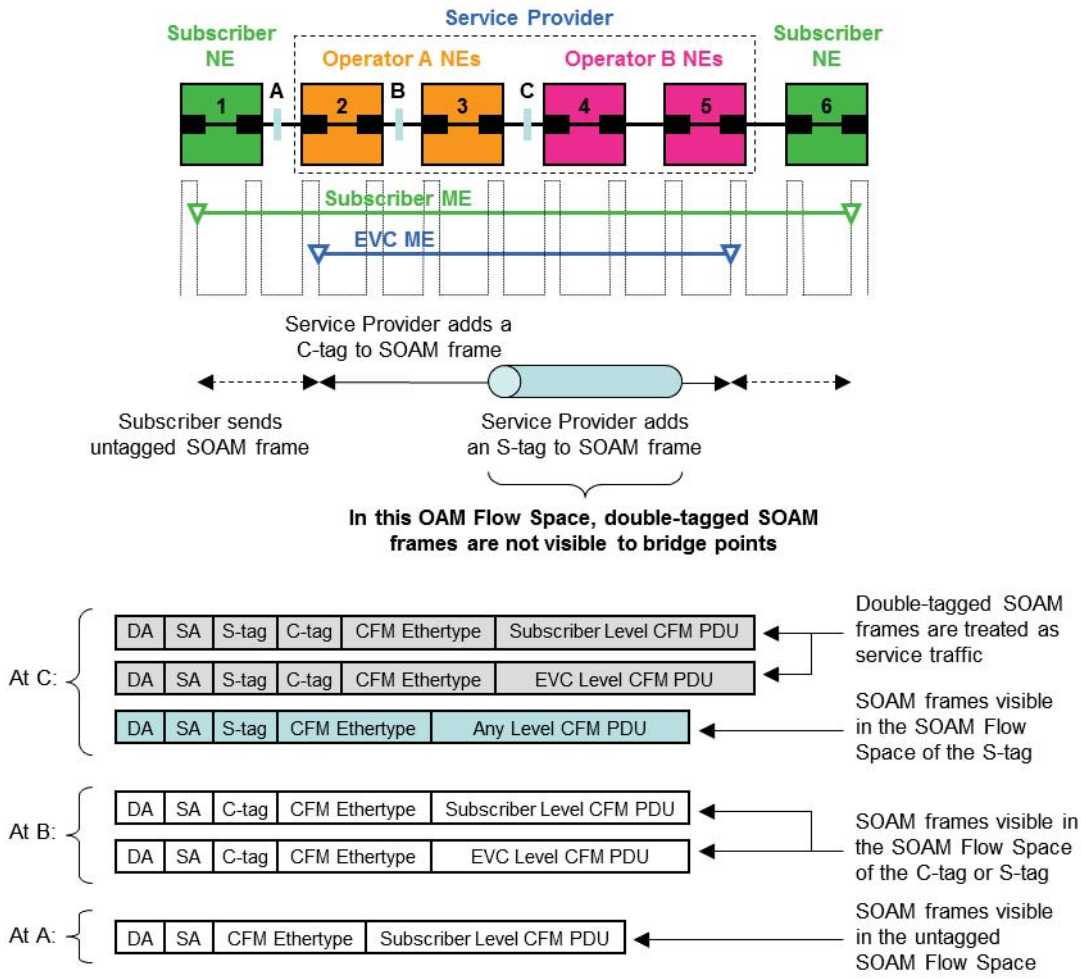


**Figure 21 – SOAM Frame Formats**


© The Metro Ethernet Forum 2013. Any reproduction of this document, or any portion thereof, shall contain the following statement: "Reproduced with permission of the Metro Ethernet Forum." No user of this document is authorized to modify any of the information contained herein.

# 13. Appendix C – Mapping Between 802.1Q and Y.1731 Terms [Informative]

The relationship between the relevant terms used by IEEE 802.1Q [3] and ITU-T Y.1731 [7] is shown in Table 5.

| ITU-T Y.1731 Term | IEEE 802.1Q Term | Comments |
|---|---|---|
| Maintenance Entity Group (MEG) | Maintenance Association (MA) | This document uses MEG. |
| Maintenance Entity Group Identifier (MEG ID) | Maintenance Association Identifier (MAID) | This document uses both MEG ID and MAID. |
| — | Maintenance Domain (MD) | There is no ITU equivalent of this term. This document uses MD only when describing the format of a MAID. |
| Maintenance Entity Group Level (MEG Level) | Maintenance Domain Level (MD Level) | This document uses MEG Level. |

**Table 5 – Terminology Mappings**


© The Metro Ethernet Forum 2013. Any reproduction of this document, or any portion thereof, shall contain the following statement: "Reproduced with permission of the Metro Ethernet Forum." No user of this document is authorized to modify any of the information contained herein.

# 14. Appendix D – Examples of Client MEGs for Injecting AIS and LCK [Informative]

Consider the network shown in Figure 22 below:

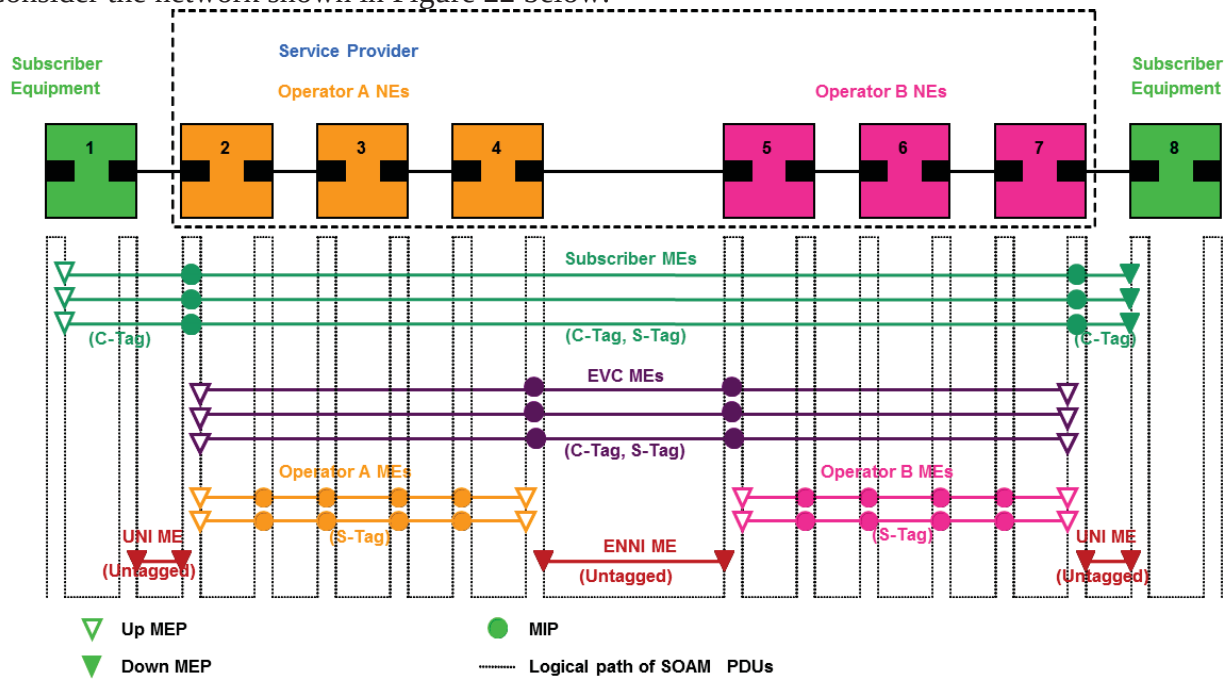


**Figure 22 – Example Network**

In this example, the UNI and ENNI MEGs use untagged SOAM frames, the Operator MEGs use S-tagged SOAM frames, and the EVC and Subscriber MEGs use SOAM frames that are C-tagged at the UNI, and double tagged with a C-tag and an S-tag at the ENNI. As shown, there may be several Operator MEGs in each Operator, using different S-tags. Likewise, there are a number of EVCs and Subscribers, and hence a number of EVC MEGs and Subscriber MEGs, each using potentially different C-tags and S-tags.

As described in Appendix B, each of these three OAM flow spaces has an independent set of MEG Levels. If the default levels described in Table 3 are used, then each MEG has a higher level than those shown below it in the diagram. However, if non-default levels are configured, then it may be the case that, for example, the Operator MEGs have a lower level than the UNI or ENNI MEGs, or that the EVC MEGs have a lower level than the Operator MEG with the same S-VID. On the other hand, since the EVC and Subscriber MEGs are in the same OAM flow space, the Subscriber MEG must have a higher MEG Level than the EVC MEG with the same C-VID and S-VID.

It is possible, although highly unlikely in practice, that the EVC MEGs do not all use the same level, and the same applies to the Operator MEGs within one operator. It is somewhat more likely that different Subscriber MEGs use different levels.


© The Metro Ethernet Forum 2013. Any reproduction of this document, or any portion thereof, shall contain the following statement: "Reproduced with permission of the Metro Ethernet Forum." No user of this document is authorized to modify any of the information contained herein.

The client MEGs for each MEG in this example can be determined as follows. Note that conceptually, this determination is very simple: in each case, the client MEGs for a particular MEG are the MEGs that appear directly above it in the figure.

- For the UNI MEG, the client MEGs are the Subscriber MEGs that flow over the UNI. There could be up to 4094 of these, each with a different C-VID. At the UNI-C, injecting an AIS involves just sending an AIS indication, since both the UNI MEG and the subscriber MEG have a MEP on the UNI-C. However, at the UNI-N an AIS PDU would be sent for each Subscriber MEG. Note that although the Operator and EVC MEGs have MEPs at the UNI-N, they are not client MEGs of the UNI MEG, since they do not encompass it, i.e., the SOAM PDUs for those MEGs do not flow over the UNI.

- For the ENNI MEG, the client MEGs are the EVC MEGs for the EVCs that flow over the ENNI. There could be up to 16,760,836 of these, i.e., 4094 C-VIDs for each of 4094 S-VIDs, although of course this upper bound is unlikely to be reached in practice[10]. Injecting an AIS at an ENNI involves sending an AIS PDU for each EVC. Note that as in the case of the UNI MEG, the Operator MEG is not a client of the ENNI MEG, since the Operator MEG SOAM PDUs do not flow over the ENNI. In addition, the Subscriber MEGs are not clients of the ENNI MEG since they are not conceptually the **next** highest MEGs: the EVC MEGs are in between.

- For an Operator MEG using a given S-VID, the client MEGs are the EVC MEGs that flow over that S-VID, i.e., whose SOAM frames have an outer tag containing that S-VID. There could be up to 4094 such EVC MEGs, each with a different C-VID. At the UNI-N, both the Operator MEG and the EVC MEGs have a MEP, and hence injecting an AIS involves just sending an AIS indication. At the ENNI, the EVC MEGs do not have a MEP and so injecting an AIS involves sending an AIS PDU for each EVC MEG with the matching S-VID.

- For an EVC MEG using a given S-VID and C-VID, there is a single client MEG, i.e., the Subscriber MEG that uses the same S-VID and C-VID. In this case since the two MEGs are within the same OAM Flow Space, the Subscriber MEG must have a higher level. There is no Subscriber MEP at the UNI-N, and so injecting an AIS involves sending an AIS PDU at the Subscriber MEG Level, for the single Subscriber with the matching S-VID and C-VID.

- The Subscriber MEG is conceptually the highest MEG, and hence has no client MEGs and never injects AIS.

[10] In fact, in the most common deployment scenario, the EVC MEG would use S-tagged, not double-tagged, SOAM frames and hence the ENNI MEP would only need to insert up to 4094 AIS PDUs. The example given in this appendix is somewhat contrived, in order to cover all the possible cases.


© The Metro Ethernet Forum 2013. Any reproduction of this document, or any portion thereof, shall contain the following statement: "Reproduced with permission of the Metro Ethernet Forum." No user of this document is authorized to modify any of the information contained herein.