Google Inc.
25 Massachusetts Avenue, N.W.
Ninth Floor
Washington, DC 20001

Main 202 346.1100
Fax 202 346.1101
www.google.com

July 28, 2015

Via Electronic Filing

Marlene H. Dortch
Secretary
Federal Communications Commission
445 12th Street SW
Washington, DC 20554

Re: Notice of Ex Parte Communication: *Amendment of Parts 15, 73 and 74 of the Commission's Rules to Provide for the Preservation of One Vacant Channel in the UHF Television Band For Use By White Space Devices and Wireless Microphones*, MB Docket 15-146; *Amendment of Part 15 of the Commission's Rules for Unlicensed Operations in the Television Bands, Repurposed 600 MHz Band, 600 MHz Guard Bands and Duplex Gap, and Channel 37, Amendment of Part 74 of the Commission's Rules for Low Power Auxiliary Stations in the Repurposed 600 MHz Band and 600 MHz Duplex Gap,* ET Docket No. 14-165; *Expanding the Economic and Innovation Opportunities of Spectrum Through Incentive Auctions*, GN Docket No. 12-268

Dear Ms. Dortch:

On July 24, 2015, Alan Norman of Google Inc. and Paul Margie of Harris, Wiltshire & Grannis LLP met with Gary Epstein, Howard Symons, and Mary Margaret Jackson of the Incentive Auction Task Force; Julius Knapp, Ira Keltz, Martin Doczkat, Matthew Hussey, Paul Murray, Aspasia Paroutsas, Serey Thai, and Hugh Van Tuyl of the Office of Engineering and Technology; John Leibovitz, Blaise Scinto, Chris Arthur, Chris Helzer, Madelaine Maior, Jennifer Tomchin, and Janet Young of the Wireless Telecommunications Bureau; Johanna Thomas, Legal Advisor for Commissioner Rosenworcel; Brendan Carr, Legal Advisor for Commissioner Pai; and Jessica Almond, Acting Legal Advisor for Chairman Wheeler. Don Breslin of Google Inc. and I joined the first meeting by phone, and I joined the remaining meetings by phone. On July 27, 2015, Austin Schlick of Google Inc. and Paul Margie of Harris, Wiltshire & Grannis LLP met with David Strickland, Acting Legal Advisor for Commissioner Clyburn. I joined the July 27 meeting by phone.

In each of these conversations, the Google representatives discussed the importance of making three usable channels available for unlicensed operations in the broadcast bands and repurposed 600 MHz band. We shared new analysis further confirming that a 40 mW unlicensed television white spaces (TVWS) device can operate in the duplex gap without causing interference to LTE operations, and discussed the importance of designating other available channels—including Channel 37 and a remaining

vacant channel in television broadcast band—for unlicensed use. We reviewed with the incentive auction team the attached presentation summarizing Google's most recent engineering findings.

With respect to TVWS operations in the duplex gap, we emphasized two points. First, common use cases add significant shadowing losses to unlicensed device signal propagation, as compared idealized free space conditions. Second, out-of-band emissions from an unlicensed TVWS device do not affect LTE operations. Our presentation also noted the benefits of establishing a 1 MHz separation between an unlicensed channel in the duplex gap and LTE downlink. Further details on each of these points are set forth below. This analysis supplements earlier submissions by Google, Broadcom, and other parties that show a 40 mW TVWS device can operate at a 3 MHz separation from LTE without causing harmful interference.[1]

1. **Ordinary user behavior, like holding a device in the hand or placing it on a table, creates substantial shadowing losses.**

In May 2015, Google submitted the results of laboratory simulations demonstrating that holding smartphones or placing them on a table creates substantial propagation losses over free space conditions.[2] To supplement this analysis, Google recently conducted further investigations of both the hand-held and tabletop scenarios.

Hand Loss: Google's May 2015 analysis showed that when an LTE handset and TVWS device both are held in the hand, this adds an extra 15 dB of loss over free space propagation.[3] Applying the same simulation methodology, Google engineers recently investigated the effect of holding only one phone, as opposed to a simulation modeling both devices being held in the hand. This new research revealed that holding one device in the hand adds at least 8 dB of loss over free space conditions, even when the other is suspended in free space. To confirm the accuracy of this simulation, Google then

---

[1] Letter from Paul Margie, Counsel, Google Inc. and Broadcom Corp., to Marlene H. Dortch, Secretary, Federal Communications Commission, *Broadcom Corp. WiFi-LTE Interference Analysis* at 5, GN Docket No. 12-268 (filed Jan. 30, 2014) (Jan. 2014 Letter); Letter from Broadcom Corp., to Marlene H. Dortch, Secretary, Federal Communications Commission, at slide 8, GN Docket No. 12-268 (filed July 22, 2014); Comments of Broadcom Corp. at 17-20, ET Docket No. 14-165 and GN Docket No. 12-268 (filed Feb. 4, 2015); Comments of Google Inc. at 6-16, ET Docket No. 14-165 and GN Docket No. 12- 268 (filed Feb. 4, 2015); Comments of Microsoft Corp. at 5-9, 14-16, ET Docket No. 14-165 and GN Docket No. 12-268 (filed Feb. 4, 2015); Reply Comments of Google Inc. at 3-12, ET Docket No. 14-165 and GN Docket No. 12-268 (filed Feb. 25, 2015) (Google Reply Comments); Reply Comments of Microsoft Corp. at 3-14, ET Docket No. 14-165 and GN Docket No. 12-268 (filed Feb. 25, 2015); Letter from Aparna Sridhar, Counsel, Google Inc., to Marlene H. Dortch, Secretary, FCC, GN Docket No. 12-268, ET Docket No. 14-165, at 1-7 (filed May 22, 2015) (May 2015 Letter).

[2] May 2015 Letter at 3-4.

[3] *Id.*

measured the free space path loss between LTE and TVWS devices suspended in air and, later, a Google engineer held one device in his hand, away from his body, while the other device remained suspended in free space. The orientation of the two devices remained constant between the two tests, eliminating the effects of any pattern or polarization mismatch. In direct measurements, holding one device in the hand resulted in 12 dB of loss over free space conditions—a result consistent with Google's earlier simulations.

Tabletop Loss: Google's May 2015 analysis also showed that the everyday act of placing a smartphone on a table creates substantial propagation loss—between 6 and 16 dB of additional loss over free space path loss.[4] Losses were equally substantial between an access point and a smartphone placed on a wooden table. In their latest testing, Google engineers placed an access point and smartphone on a wooden table and measured losses between the two devices as compared to free space conditions. Placing devices on the tabletop resulted in additional losses of 10 dB or more.

Google's recent analysis thus provides still more evidence that operating LTE and unlicensed devices in real-world conditions creates substantial propagation losses over and above those associated with free space. Given the 8+ dB and 12 dB loss for a single hand, from simulation and measurement, respectively, and the 10 dB loss from an unlicensed access point and LTE handset on a tabletop, a conservative estimate of shadowing for practical use cases is 10 dB. By contrast, many of the the analyses submitted in an effort to prevent or limit unlicensed use of the duplex gap assume free-space or near free-space conditions, and thus improperly assess the possibility of harmful interference from TVWS devices to licensed LTE.[5]

2. Unlicensed devices' out-of-band emissions will not cause harmful interference to spectrally and physically proximate LTE devices.

Google's May 2015 Letter summarized testing that demonstrates LTE throughput remains robust even in the presence of signals transmitted at powers as high as 20 dBm (100 mW), with spectral separation as little as 2 MHz and physical separation as little as 1 meter.[6] Further testing investigated LTE's tolerance to unlicensed signals transmitting radiofrequency energy outside of a 6 MHz channel and into the LTE band itself.

To measure the impact of TVWS out-of-band emissions on LTE downlink transmissions, Google asked Dr. Paul Kolodzy of Kolodzy Consulting, LLC, to perform further analysis using the measurement system used previously to quantify interference impacts on a live LTE network in the Northern Virginia metropolitan area.[7] In the most recent testing, direct co-channel noise was introduced into an LTE receiver to quantify the impact of co-channel interference on LTE performance. Specifically, Dr. Kolodzy connected

---

[4] *Id.* at 4.

[5] *See* Google Reply Comments at 7, 10 (summarizing propagation assumptions of Qualcomm and CTIA).

[6] May 2015 Letter at 7.

[7] *Id.* at A13-A21.

the the radiofrequency (RF) port of an LTE phone to an RF combiner using an RF cable. The common port of the combiner was connected to the LTE handset's RF port. The opposite two sides of the combiner were separately connected to an antenna receiving LTE signals and a wideband signal generator. These two signals (LTE signals received and wideband signals generated) were combined and sent to handset's RF port in order to measure potential interference by the signal generator to LTE reception. At the same time, the high port-to-port isolation of the combining ports insured negligible radiation from the signal generator out of the antenna. The losses of each of the signal paths were calibrated with a signal generator and spectrum analyzer, so that both the downlink LTE signal power and the signal generator power at the user equipment's RF port were known.

Google and Dr. Kolodzy found no difference in LTE throughput between the control group scenario, which measured transmissions in the absence of the wide-band signal generator, and the test group scenario, which introduced a potentially interfering co-channel signal, up to a received power of -95 dBm at the user equipment's RF port.[8] These results are presented below.

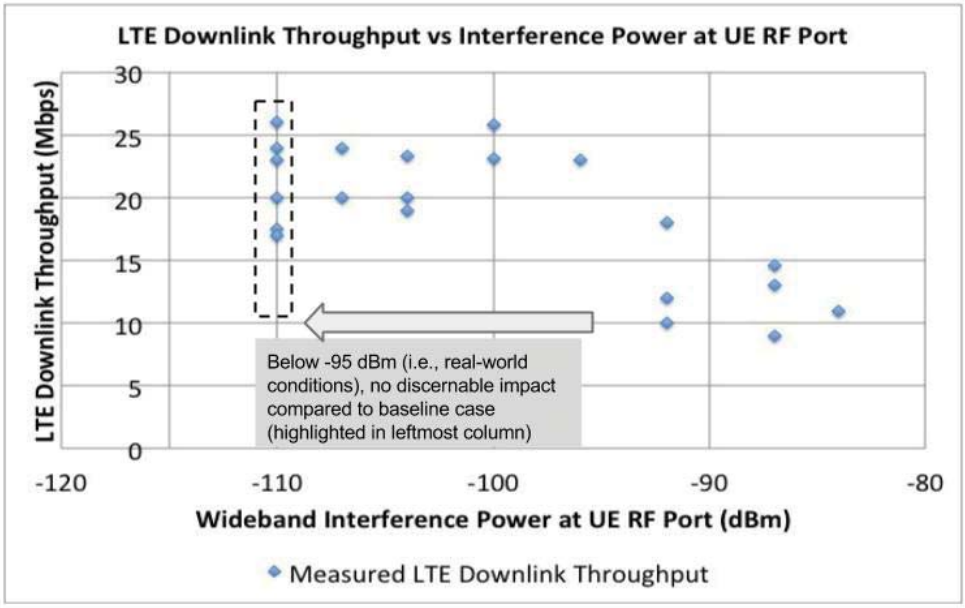

The baseline measurements, without the signal generator output enabled, are captured in the chart at -110 dBm for presentation purposes. The second, third, fourth, and fifth columns from the left, which reflect received powers of -107 dBm through -96 dBm, show no discernable decrease in LTE throughput as compared to the baseline measurements. Thus, unlicensed devices will not cause degradation in performance at

[8] *See* Attachment 1, *600 MHz Band Duplex Gap: LTE and TVWS Coexistence*, Slide 4.

received signal powers of -95 dBm—a level that will not be exceeded in real-world operation. Google's analysis confirming this point is summarized in the table below

Table 1: Conservative Propagation Loss Assumptions

Unlicensed device filter attenuation[9]	56 dB
Additional attenuation over 3 MHz spectral separation[10]	10 dB
Free space path loss over 2 meter physical separation	35 dB
Shadowing loss[11]	10 dB
Total losses	**111 dB**

Assuming an LTE antenna gain of -6 dBi,[12] an unlicensed device transmitting at 16 dBm, or 40 mW, can be expected to present no more than -101 dBm into a nearby LTE device on the nearest LTE downlink channel; that is 16 dBm transmit power minus 111 dB of transmit filtering and channel loss, minus 6 dB for antenna gain, for -101 dBm of received interference signal power. This is substantially lower than -95 dBm threshold after which LTE performance degradation was observed in Google's testing. It is also lower than the -98.5 dBm level endorsed by Broadcom and Qualcomm and based on 3GPP-imposed reference sensitivity requirements.[13] Thus, an FCC determination that unlicensed devices operating at even a 3 MHz separation from an LTE channel will not cause harmful interference to LTE operations would be correct.

Moreover, even this analysis addresses an edge case. In most cases, an LTE smartphone operating in close proximity to an unlicensed Wi-Fi network is likely to connect

---

[9] The Commission's rules require unlicensed devices in the television broadcast bands to limit out-of-band emissions to 56.8 dBm in channels adjacent to occupied television channels. *See* 47 C.F.R. 15.709(c)(ii).

[10] *See* May 2015 Letter at 4 (showing that unlicensed devices in the broadcast bands show 10 dB additional attenuation outside the pass band).

[11] As discussed in further detail above, this represents a conservative analysis of shadowing losses. Indeed, Google's recent analysis did not account for polarization and pattern mismatch, which could easily add another 3 dB of loss to the calculations set forth here.

[12] For this analysis, Google uses a conservative figure of -6 dBi antenna gain, even though the Commission has held that -8 dBi is reasonable in the context of this proceeding. *See In the Matter of Expanding the Economic and Innovation Opportunities of Spectrum Through Incentive Auctions*, GN Docket No. 12-268, Report and Order, 29 FCC Rcd. 6567, Appendix C ¶ 54 (2014).

[13] *See* Reply Comments of Qualcomm Inc. at 8, GN Docket No. 12-268 (filed March 12, 2013); Jan. 2014 Letter *Broadcom Corp. WiFi-LTE Interference Analysis* at 3, GN Docket No. 12-268.

to the (probably lower cost) Wi-Fi network rather than trying to connect with the (probably higher cost) LTE network. Even if an LTE device were attempting to connect to its carrier network when in close proximity to an unlicensed device, it likely would not be operating at the edge of the LTE network range, which is where one would expect it to be susceptible to low levels of interference.[14]

3. A 1 MHz separation between unlicensed devices and LTE transmitters will improve the performance of unlicensed devices operating in the duplex gap.

During the recent meetings, the Google representatives also advocated that the Commission establish a separation of 1 MHz between unlicensed use in the duplex gap and LTE uplink transmissions. Establishing this separation will improve the adjacent channel rejection performance of unlicensed devices, thereby increasing their utility. The adjacent channel rejection specification measures the ability of a receiver to filter and reject power in an adjacent channel. Wi-Fi devices have weaker adjacent channel rejection than LTE devices[15] and as a result, a 1 MHz gap will be particularly beneficial in improving the performance of unlicensed Wi-Fi devices using the 802.11af standard, which was developed specifically for this band.

4. Enabling access to Channel 37 and a vacant channel, as well as adopting a more appropriate location accuracy determination approach, are critical to establishing a viable unlicensed ecosystem in the television broadcast and 600 MHz bands.

During the recent meetings, we also made a number of general observations regarding unlicensed operations the duplex gap and in Channel 37, preservation of a vacant channel in the television broadcast bands, and technical changes to the existing rules for unlicensed devices. We noted that placing broadcasters in the duplex gap will make it much more difficult to reach the three-channel minimum, but stated Google's openness to any approach that both enables a viable unlicensed ecosystem with access to at least three usable 600 MHz band channels nationwide, and maximizes the availability of licensed wireless spectrum.

To that end, we advocated that the Commission should establish conservative but reasonable protection areas for wireless medical telemetry users in Channel 37, without establishing protection contours for atypical sites as the default for all sites. We further discussed access to a vacant channel in all markets nationwide as a critical component in reaching the three-channel minimum. Finally, we discussed the benefits of allowing unlicensed devices to report their location capabilities, rather than mandating that devices

---

[14] *See* May 2015 Letter at 4-6.

[15] *Compare, e.g.*, 3GPP TS 36.101 V8.0.0 § 7.5.1 (2009-12) (adjacent channel selectivity) (establishing a standard rejecting adjacent channel transmissions up to 33 dB) *with, e.g.*, IEEE 802.11af § 23.3.19.3 (2013) (recommending adjacent channel rejection up to 16 dB under similar conditions), *available at* https://standards.ieee.org/findstds/standard/802.11af-2013.html.

meet a particular location-accuracy standard.[16] Under such a framework, a device would share its location-accuracy information with a TVWS database.[17] The database would use this accuracy parameter as an input for calculating available spectrum in the vicinity of the device. Thus, a device with a 100-meter location-accuracy capability would have to maintain a separation distance that is larger (by 50 meters) than the separation distance for a device with 50-meter capability, while a device with more precise location-accuracy capabilities could gain access to additional areas on account of its greater precision. In all cases, incumbents would be protected equally from harmful interference.

* * * * *

In sum, the Commission has the opportunity to adopt reasonable technical rules for the operation of unlicensed devices in the duplex gap, guard bands, Channel 37, and a preserved vacant channel in the broadcast bands. It should do so without delay.

Pursuant to the Commission's rules, this notice is being filed in the above-referenced dockets for inclusion in the public record. Please contact me should you have any questions.

Respectfully submitted,

Aparna Sridhar
Counsel
Google Inc.

cc: *Via electronic mail*
Meeting participants

---

[16] *See* 47 C.F.R. § 15.711(b); *see also In the Matter of Amendment of Part 15 of the Commission's Rules for Unlicensed Operations in the Television Bands, Repurposed 600 MHz Band, 600 MHz Guard Bands and Duplex Gap, and Channel 37, Amendment of Part 74 of the Commission's Rules for Low Power Auxiliary Stations in the Repurposed 600 MHz Band and 600 MHz Duplex Gap,* ET Docket No. 14-165; *Expanding the Economic and Innovation Opportunities of Spectrum Through Incentive Auctions*, GN Docket No. 12-354, Notice of Proposed Rulemaking, 29 FCC Rcd. 12248 ¶¶ 76-77 (2014) (considering whether to amend this rule).

[17] Under this framework, devices would retain the option of merely complying with today's 50-meter accuracy requirement or reporting a smaller or larger accuracy radius.

600 MHz Band Duplex Gap

LTE and TVWS Coexistence

Recent measurements confirm that proximity to the body and mere placement on a tabletop create substantial additional losses

- Google's May 2015 filing presented simulation results of losses between two smartphones placed 2 meters apart in free space, with a hand holding each.
  - Simulations showed a human hand on each phone adds approximately 15 dB of loss.
  - **Further simulation has shown a single human hand adds 8 dB of loss.**
  - **Direct measurement of the hand loss from a single hand produced 12 dB of loss.**
- Google's May 2015 FCC filing presented lab measurements of losses between two smartphones placed 2 meters apart on a wooden table.
  - Measurements showed placement on the the table introduced 6 to 16 dB of loss, as compared to free space.
  - **Further measurements have shown that placing an AP antenna and smartphone on a wooden table results in an additional loss 10 dB or more, as compared to free space conditions.**

TVWS Out-of-Band Emissions Do Not Cause Interference to LTE

- Google's May 2015 filing presented measurement results for an interfering narrowband signal on a live LTE network.
  - These results showed negligible impact to LTE throughput at transmit powers higher than proposed in the TVWS rules, and at close frequency separation. These results also showed a substantial amount of throughput variation inherently present due to cellular loading and interference (cellular frequency-reuse).
  - **Further measurements have been conducted which directly add wideband noise power to the LTE channel in use. These results again demonstrate the impact of TVWS interference is negligible if TVWS devices are permitted to operate in the duplex gap at a power level of 40 mW, assuming 2-meter spacing, a common TVWS mask, 3 MHz frequency separation, and 10 dB shadowing loss.**

Unlicensed device out-of-band emissions into an LTE channel do not impact LTE throughput

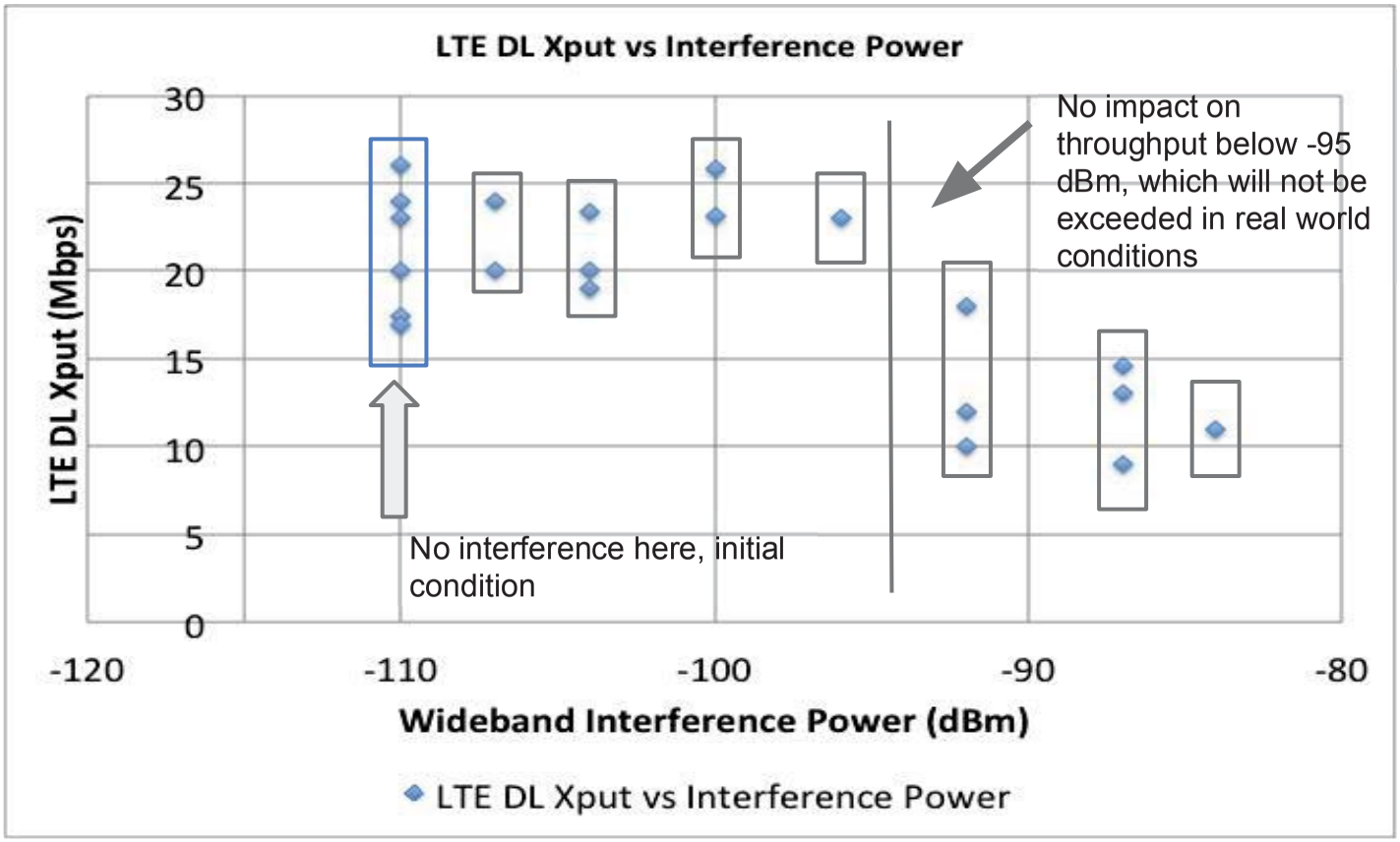

In the duplex gap, the Commission should establish a 1-MHz separation between TVWS and LTE uplink

- Google's March 2015 filing proposed a 1 MHz frequency separation from LTE uplink transmissions to the TVWS channel in the duplex gap.
  - This proposal is intended to allow the TVWS device frequency margin to improve adjacent channel rejection performance.
  - The LTE receive adjacent channel selectivity performance is specified by 3GPP to be 33 dB.
  - The Wi-Fi receive adjacent channel rejection is specified by 802.11 to be 16 dB under similar conditions.
  - The adjacent channel rejection specification measures the ability of the receive chain to filter and reject power from the adjacent channel and does not cover out-of-band emissions that fall on-channel.
  - Given 802.11's relative weakness in adjacent channel rejection as compared to LTE, 1 MHz spacing between TVWS and LTE uplink is recommended to avoid loss of TVWS dynamic range in close proximity to adjacent LTE transmissions.

Conclusions

1. Path loss and isolation are increased significantly from free-space in practical use cases, including holding a smartphone in a hand, or placing an AP and smartphone on a table.
2. TVWS out-of-band emissions will not have an impact on LTE downlink.
3. 802.11's adjacent channel rejection performance is weaker than LTE's. Establishing a 1-MHz frequency separation between LTE uplink and a TVWS receiver could help mitigate risk of degraded TVWS receiver performance in close proximity to adjacent channel signal from the LTE transmitter.