COVINGTON

BEIJING BRUSSELS LONDON NEW YORK
SAN DIEGO SAN FRANCISCO SEOUL
SHANGHAI SILICON VALLEY WASHINGTON

Gerard J. Waldron

Covington & Burling LLP
One CityCenter
850 Tenth Street, NW
Washington, DC 20001-4956
T +1 202 662 5360
gwaldron@cov.com

September 30, 2015

Ms. Marlene H. Dortch
Secretary
Federal Communications Commission
445 12th Street, SW
Washington, DC 20554

Re: *Ex parte* presentation in IB Docket No. 12-340; IBFS File Nos. SAT-MOD-20101118-00239; SAT-MOD-20120928-00160; SAT-MOD-20120928-00161; SES-MOD-20121001-00872

Dear Ms. Dortch:

Please find attached a revised test plan by Roberson and Associates, a consultant to the undersigned in connection with our representation of LightSquared. This revised test plan reflects ongoing discussions that Roberson and Associates has had with the National Public Safety Telecommunications Council (NPSTC) and other industry stakeholders to ensure the R&A testing addresses questions they have raised. The enclosed test plan also reflects refinements to the testing protocol to ensure that wide area augmentation systems are appropriately taken into account.

Details of the test plan and the proposed device list continue to be refined and are thus subject to further revision. LightSquared continues to put on the public record the specific details of its testing plan so that it may be reviewed by all interested parties and we welcome discussion with any interested party.

Please direct any questions to the undersigned.

Respectfully submitted,

Gerard J. Waldron

Gerard J. Waldron
Counsel to LightSquared

Attachments

Roberson and Associates, LLC

Technology and Management Consultants

GPS Sensitivity Measurement Plan

September 30, 2015

v1.2

1 MEASUREMENT PLAN EXECUTIVE SUMMARY 2
1.1 Purpose 2
1.2 Deliverables 2

2 KPI MEASUREMENT PLAN 2
2.1 Test Plan for Cellular GPS Devices 2
2.2 Key Performance Indicators (KPIs) for non-Cellular GPS Devices 3
2.3 GPS Device List 4
2.4 Antennas 6
2.5 Conducted Measurements 6
2.6 Radiated Measurements 7
2.7 Dependencies and Assumptions 8
2.8 Equipment List 11
2.9 Calibration and Pretest 11

3 KPI MEASUREMENT 12
3.1 Measurement Sequence 12
3.2 Aviation Certified Measurements 14
3.3 Aviation (uncertified) Measurements 15
3.4 High Precision Measurements 16
3.5 Timing 20
3.6 Cellular Device Measurements 21
3.7 General Navigation Device Measurements 23

4 TTFF AND REACQUISITION TESTING 24

5 ANALYSIS 25
5.1 Statistical Analysis 25

6 CHANGE HISTORY 26

Roberson and Associates, LLC Proprietary.

1 MEASUREMENT PLAN EXECUTIVE SUMMARY

1.1 Purpose

The purpose of the GPS receiver measurement project is to collect supporting data to establish the impact on Key Performance Indicators (KPIs) that a GPS device user may experience when L-band LTE downlink and uplink signals are present. Signal to noise ratios in the form of reported C/No values and other GPS receiver data will also be collected. Emphasis is on real world expected LTE signal levels including temporal and spatial variations in signal levels.

1.2 Deliverables

For each device in each category the main deliverables are detailed records of the KPI statistics observed as a function of LTE signal levels at the input to the GPS device. A determination is made of the received power adjacent band levels versus observed changes in KPI statistics without any pass/fail determination.

2 KPI MEASUREMENT PLAN

2.1 Test Plan for Cellular GPS Devices

Cellular GPS devices will be tested as per the TWG devised test plans for Accuracy [TWG Report, Sections 3.2.9.2.2 and 3.2.9.2.3] and Sensitivity [TWG Report, Section 3.2.9.2.1]. If it is infeasible to perform the tests exactly as per these test plans, the latter may be modified in the future. These 3GPP tests are found in 3GPP Specification 37.571-1 for UTRAN and E-UTRAN based systems. The Sensitivity test is described in section 7.1 and the Accuracy test is described in section 7.2.

The two figures below are taken from TS 37-571-1.

Table 7.1.1.2: Requirements Sensitivity Coarse time assistance

Success rate	2-D position error	Max response time
95 %	100 m	20 s

Table 7.1.1.3: Parameters Sensitivity Coarse time assistance - Sub-Test 1

Parameters	Unit	Value
Number of generated satellites	-	8
HDOP Range	-	1.1 to 1.6
Propagation conditions	-	AWGN
GPS Coarse time assistance error range	seconds	±2
GPS L1 C/A Signal for one satellites	dBm	-142
GPS L1 C/A Signal for remaining satellites	dBm	-147

Figure 1 3GPP Sensitivity KPI and test conditions from TS 37.571-1

Table 7.2.2: Requirements Nominal Accuracy - Sub-Test 1

Success rate	2-D position error	Max response time
95 %	30 m	20 s

Table 7.2.4: Parameters Nominal Accuracy - Sub-Test 1

Parameters	Unit	Value
Number of generated satellites	-	8
HDOP Range	-	1.1 to 1.6
Propagation conditions	-	AWGN
GPS Coarse Time assistance error range	seconds	±2
GPS L1 C/A Signal for all satellites	dBm	-130

Figure 2 3GPP Accuracy KPI and test setup from TS 37.571-1

2.2 Key Performance Indicators (KPIs) for non-Cellular GPS Devices

The table below lists a preliminary list of the KPIs of the different GPS device classes. This list is subject to enhancement as additional inputs are received hopefully including inputs from the key GPS vendors whose devices will be the subject of this test. Dilution of Precision (DOP) is a function of the position of satellites and not a KPI dependent on LTE signals level. Since C/No is reported in NMEA messages along with other data it will be collected.

C/No and the number of satellites are reported for each satellite in NMEA messages and will also be collected and included in the statistical analysis. However, not all devices report C/No.

Table 1 KPIs for GPS device category

	Cert Aviation	Aviation (Uncert.)	High Precision	Timing	Cellular	General Nav
KPI	3D Position Error • See 3.2.3 below	• 3D Position Error	• 3D Position Error • Loss of RTK	• Timing Error	• 3GPP KPIs • 2D Position Error •	• 2D Position Error
System Data	• C/No • WAAS message error rate • DOP	• Satellites in view • C/No • DOP • WAAS message error rate	• Augmentation Signal Quality • Satellites in view • C/No • DOP	• Frequency Error • Satellites in view • C/No • DOP	• Satellites in view • C/No • DOP	• Satellites in view • C/No • DOP

2.3 GPS Device List

The list of GPS devices to be tested is listed below. Two devices which were tested in 2011 are labeled. A Javad device may also be added as a reference for comparison with the other high precision GPS receivers.

Aviation (certified)
Garmin GTN 625
Avidyne IFD 440
Aviation (non-certified)
Garmin GPSMAP 696
Garmin aera 510
General location and navigation
Garmin Nuvi 2597LMT
Garmin Nuvi 55LM
TomTom VIA 1515M
Alpine In-Dash X008U
Garmin GPSMAP 76 CSx (tested in 2011)
Garmin eTrex H (tested in 2011)
Garmin Nuvi 2495LMT
TomTom Go 50S/60S
Garmin/Panasonic Uconnect 8.4N RB5
Motorola APX 7000
Motorola MW810
Pioneer AVIC-5100NEX
Harman Toyota Entune 86140-02050
Bosch in-dash Nissan 25915CJ0A

Garmin GPSMAP 78 SC
Garmin Montana 650t
Magellan Explorist 350H
Bushnell Onix 400 Waterproof Hiking GPS
Furuno GP32
Wabtek Navigation Sensor Module
Cellular
Apple iPhone 5s
Apple iPhone 6
Samsung Galaxy S5
Samsung Galaxy S6
iPad (w/cellular data)
Samsung Galaxy Tab 4G LTE
High precision
Deere Starfire 3000 (0907PC, 1010, 2010 and 7800)
NovAtel Smart6 or Smart6-L
Topcon SGR-1
Topcon System 310
Trimble AgGPS 542
NAVCOM SF-3050
Trimble Geo 7x
Trimble TM3000
Trimble SPS855 GNSS Receiver
Trimble SPS985 Antenna
Trimble Net R9 or R8s Base RTK for R8s rover
Trimble R8s
Topcon HiPer V
Timing
Arbiter 1088B GPS Satellite Clock (40ns)
Symmetricom 1510-602

2.4 Antennas

Listed below are some antennas that are resilient to adjacent channel signals.

Vendor	Class	Model
AeroAntenna Technology	Aviation	AeroAntenna AT575-93
PCTel	Mobile	3915D-HR
PCTel	Mobile	8171D-HR
PCTel	Timing	GPS-TMG-HR-26N
JAVAD (LSQ Provided)	High Precision	N/A
Novatel	High Precision	GPS-713-GGG-N

2.5 Conducted Measurements

The diagram below shows the basic elements of a conducted test. Conducted testing will be used in the development of data collection software, to narrow down the range of LTE levels used in testing, and to determine the length of time (labeled TRECORD below) needed to collect KPI statistics. GPS and LTE signals are generated and applied with attention paid to not increasing the noise floor at the receiver. Simulated WAAS signals will be added to the applied signals when the GPS receiver is capable of receiving and processing WAAS signals. Intermodulation distortion at the generator outputs caused by reflected power must be prevented. This diagram includes elements that may not be used in all tests. The Precision Correction source is the augmentation signal source that may be used with high precision GPS receivers. In assisted mode, GPS cell phones use information provided by the network to speed up Time To First Fix (TTFF) by providing time and satellite information to the phone. Assisted GPS also improves indoor performance by improving sensitivity.

The computer on the right in Figure 3 represents the KPI data collection.

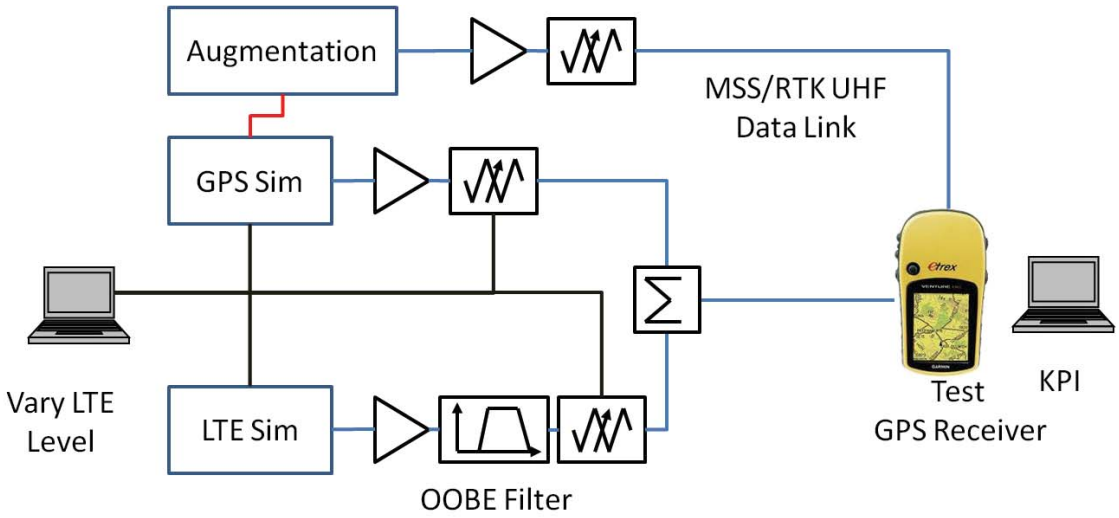

Figure 3 Simplified GPS KPI measurement schematic

2.6 Radiated Measurements

For GPS devices where conducted tests are not feasible or not deemed appropriate radiated tests will need to be performed. The test sequences will be the same. The most significant difference is that the GPS, WAAS and LTE signal levels will have to be amplified significantly to compensate for the propagation losses in an anechoic chamber. Simulated WAAS signals will be added to the applied signals when the GPS receiver is capable of receiving and processing WAAS signals. TTFF testing may include WAAS (Wide Area Augmentation Signals) as was tested by the TWG during 2011.

The diagram in Figure 4 below shows the basic schematic of the radiated tests. A computer shown on the left controls the signal frequencies and levels while the computer on the right records the desired KPI information. Not shown is the means for determining the LTE level at the GPS receiver, which is based on measuring the received LTE power with a calibrated antenna of known gain placed in the position of the Device under test and oriented toward the LTE emitter. The LTE signals need to be amplified significantly to be able to apply up to -20 dBm LTE power at the GPS receiver. Both the free space path loss in the chamber and the high peak to average ratio of the LTE waveform need to be considered in the choice of amplifier. Select devices, including public safety devices, may be retested at -10dBm LTE power after initial data collection is performed.

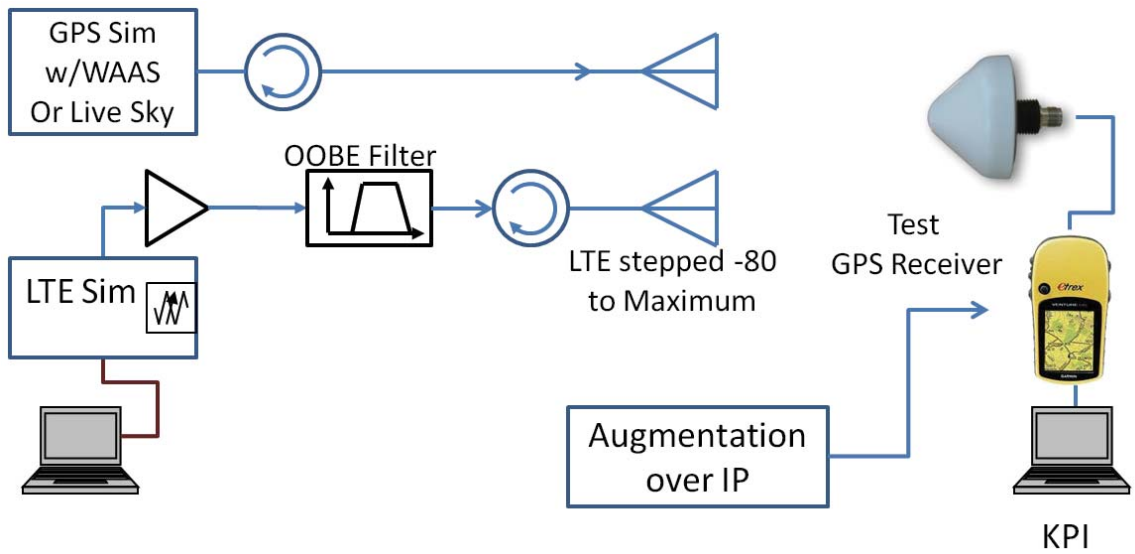

Figure 4 Simplified radiated GPS KPI measurement schematic. MSS augmented High Precision receivers will use live sky GPS+Augmentation signals.

Knowledge of GPS receiver antenna gain patterns (azimuth, elevation, and polarization) will be required to project the received power levels back to emitter antennas in use case analyses. To avoid taking radiated measurements at multiple incidence angles on the antenna, devices will be tested at one angle measured in the laboratory, and, in the use case analyses, adjusted for the angles of arrival called for by specific use cases. The 3D antenna pattern data from the equipment manufacturers will be required for this purpose, absent which, realistic assumptions will be made. Note that the laboratory set up will not try to emulate the actual angles of arrival of the LTE and GPS signals – they will be set up with convenient angles of arrival that produce strong responses from the GPS antenna. Note also that the GPS signals from different satellites will be combined and radiated as one composite signal towards the GPS receiver, most likely with an angle of arrival corresponding to the antenna's boresight. The LTE signal will likewise be radiated with an angle of arrival within +/- 45^0 of boresight. In the use case analyses, the received powers of LTE signals will be adjusted by the difference in an antenna gain between the angle of arrival used in the laboratory and that called for by a specific use case.

2.7 Dependencies and Assumptions

Only the 10 MHz bandwidth version of LTE signals will be used in the measurements. Downlink LTE signals will be assumed to be supporting many devices and have most or all LTE resource blocks assigned.

Uplink LTE signals will be representative of high data rate, greater than 1 Mbps, traffic, for example traffic representative of streaming video, nominally 3.5 Mbps. The high data rate case is the worst case since this represents transmitting on the most time and frequency resource blocks over time. Lower uplink data rates may be measured also but with a lower priority. Lower data rates will be experienced in the field and result in lower radiated power, since many of the resource blocks are not being used.

The post measurement analysis of the data involves comparison of the measured received estimated positions (for navigation receivers) and time (for timing receivers) with the true values.

The basic process is to compare true position and time with received values. 2D and 3D mean and RMS position errors and timing errors will be calculated and C/No values recorded as functions of LTE downlink and uplink signal levels at the receiver. No pass/fail judgment will be made, but analysis will be performed to estimate the impact to the user of KPI degradation in real life scenarios.

2.7.1 LTE Bands

The bands for the LTE signals to be used in the KPI measurements are shown below: Only 10 MHz bandwidths will be used. Uplink signals will include LTE resource block scheduling effects for high (3.5 Mbit/second) data rate file transfers.

LTE Direction	LTE Band	LTE Throughput (Simulated)
Downlink	1526-1536 MHz	Max. Throughput
Downlink	1670-1680	Max. Throughput
Uplink	1627.5-1637.5	~ 3.5 Mbps (Streaming Video)
Uplink	1646.7-1656.7	~ 3.5 Mbps (Streaming Video)

2.7.2 LTE Uplink Signal Generation OOBE Noise Floor

The uplink LTE signals need to simulate the entire output power spectrum that is expected to be seen from a cellular phone. The OOBE limit for LightSquared's devices is -95 dBW/MHz fom1559-1605 MHz. The tests will emulate LightSquared devices emitting OOBE at representative levels. The diagram below shows the power spectral densities for the fundamental LTE uplink signal and filtered OOBE at its licensed limit.

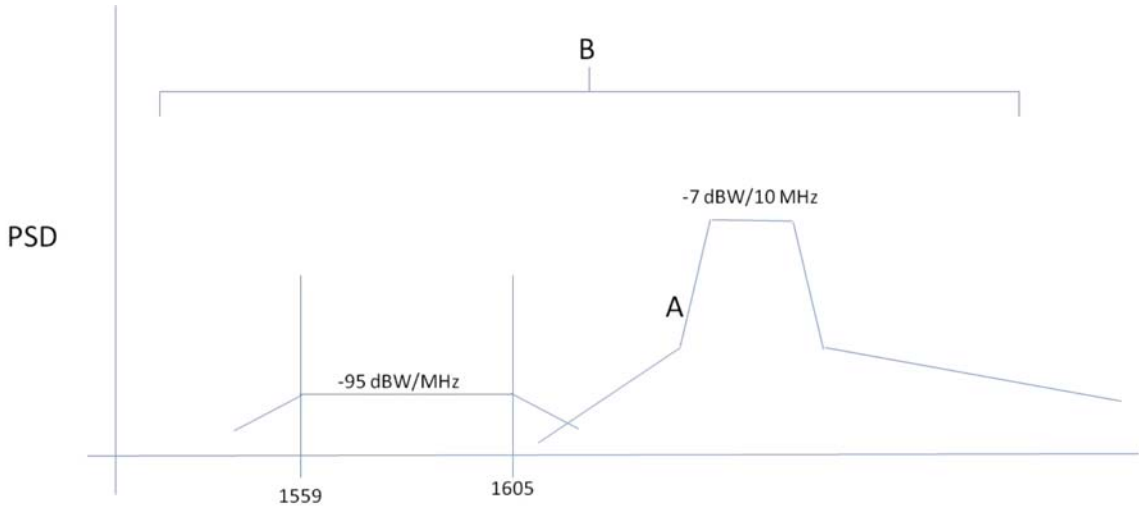

Figure 5 LTE Uplink Power Spectral Density

The LTE uplink has a maximum power of +23 dBm over a 10 MHz bandwidth. The noise floor should not exceed -95 dBW/MHz referenced to the inband level. These are EIRP values.

The schematic below shows one possible implementation for an LTE uplink with a specific OOBE noise floor. The schematic shows a wideband white noise generator output combined with the LTE uplink signal to produce a test signal with the power spectral density shown above. The actual performance of the OOBE filter will influence the need for the additive white noise source.

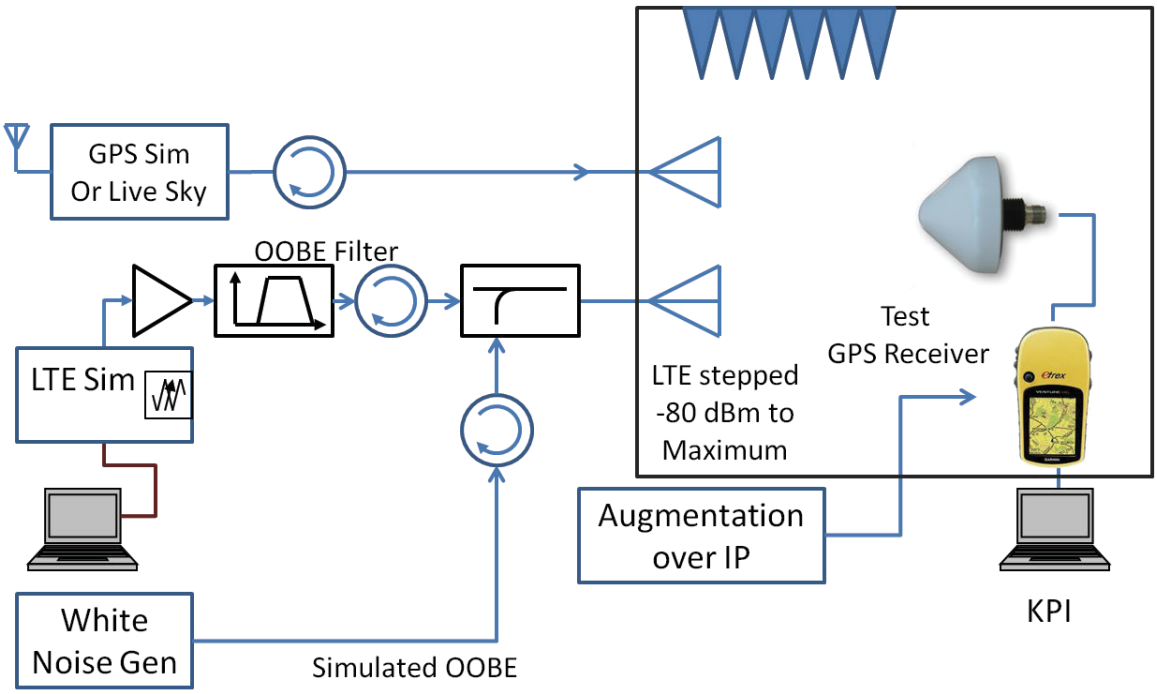

Figure 6 Schematic for producing LTE uplink OOBE noise

2.7.3 GPS Conditions

Two GPS conditions will be simulated.

Condition	Number	Level
Open	8+ satellites	-130 dBm
Stressed	5 Satellites	TBD

2.7.4 GPS Impairments

Other GPS system impairments, external to the receiver, will be emulated where feasible. These impaired conditions are summarized in the table below. These are important to be able to accurately gauge the incremental impact of LTE signals. These impairments were derived starting with values from "GLOBAL Positioning System Standard Positioning Service Performance Standard" 4th Edition, From GPS DIRECTORATE; Page 65 and 108. A conservative Zero Age of DATA (AOD) was used. Finally, the 95 % values were converted to 50% CEP values.

Table 2GPS impairments

	zero AOD, 95% Error	CEP50 (values used)
Group Delay Stability	3.1	1.4911
Other Space Segment Errors	1	0.481
Clock/Ephemeris Estimation	2	0.962
Clock/Ephemeris Curve	0.8	0.3848
Ionospheric Delay	9.8 - 19.6 (14.7)	7.0707
Group Delay Time	4.5	2.1645
Other Control Segment Errors	1	0.481
Tropospheric Delay	3.9	1.8759
Receiver Noise	2.9	1.3949
Multipath	0.2	0.0962
Other User Segment Errors	1	0.481
95% System UERE	12.7 - 21.2 (16.65)	
CEP50		8.009047212

2.8 Equipment List

The list below includes the equipment that may be needed for measuring the sensitivity of GPS KPIs to LTE signal levels

1. Spirent or other GPS Test Set capable of introducing typical GPS impairments and generating WAAS signals
2. MSS Augmentation signal source
3. RTK Augmentation message generation and RF, WiFi, or Ethernet RTK signal source
4. LTE Signal Generator
5. RF Amplifiers
6. RF Attenuators
7. RF Signal Combiners
8. LTE TX OOBE Filters
9. LTE TX and GPS TX Antennas
10. GPS RX Antennas
11. GPS RX Filters
12. Timing jitter test equipment
13. Frequency Error test equipment

2.9 Calibration and Pretest

Prior to collecting detailed KPI data the devices need to be characterized for their basic performance levels. The GPS devices need to have their GPS signal sensitivities measured and recorded. This involves applying a GPS constellation signal at a fixed, known level to each device and recording the reported C/No for each device. No adjacent band signal will be present during these measurements.

In addition to sensitivity (C/N_o reported with -130 dBm received signal level) the *gradient* of the reported C/N_o vis a vis input C/N_o will also be measured. The value of the received signal level

will be reduced in 1 dB steps from -130 dBm to -145 dBm and the reported C/N_0 reported for each step. Ideally a given reduction in the input signal level should result in an identical reduction of C/N_0 but this may not be the case with actual receivers.

A large variation in C/No or its gradient between GPS devices will need further investigation and a decision will be made regarding continuing measurements with that device.

Prior to data collection it is important to verify that the thermal noise floor has not been increased and that no spurious intermodulation signal produced by interactions between the GPS and LTE signal generators.

2.9.1 Pretest GPS Impairments

There are two pretest GPS conditions of interest. These are the un-impaired OPEN and impaired OPEN GPS conditions. These tests can also be performed during step 2 shown in the LTE sensitivity test sequence shown in Figure 7 below.

GPS Impairment	GPS Condition	KPIs/Network Data
Un-impaired	OPEN	Described in Table 1
Impaired, Table 2	OPEN	Described in Table 1

3 KPI MEASUREMENT

3.1 Measurement Sequence

The basic sequence to measure the changes in KPIs as a function of LTE signal level is shown below. The idea is to apply LTE signal and increase the level in 1 dB steps and capturing statistically valid KPI data sets at each step. A baseline set of KPI data without the LTE signal will also be collected.

The GPS simulator will be set to emulate standard User Equivalent Range Errors (UERE)) that are independent of receiver C/N_0. The GPS simulator will also provide WAAS augmentation signals when the test receiver is WAAS capable. In the case of non-MSS-augmented High Precision receivers, the augmentation signal will be provided by an IP connection; in the case of MSS augmented High Precision receivers, the augmentation and GPS signals will be received by a wideband antenna, amplified and re-radiated in the RF chamber. The error sources will include at least: satellite ephemeris error, satellite clock error, ionospheric and tropospheric delay error and standard multipath profiles (conforming to a standard such as 3GPP). Receivers using augmentation signals may be able to remove a large part of these errors but non-augmented receives will experience a baseline rms error, as they do in real life operation, that will be present in the absence of LTE signals. The KPI statistics will show the impact of the LTE signals on the baseline error.

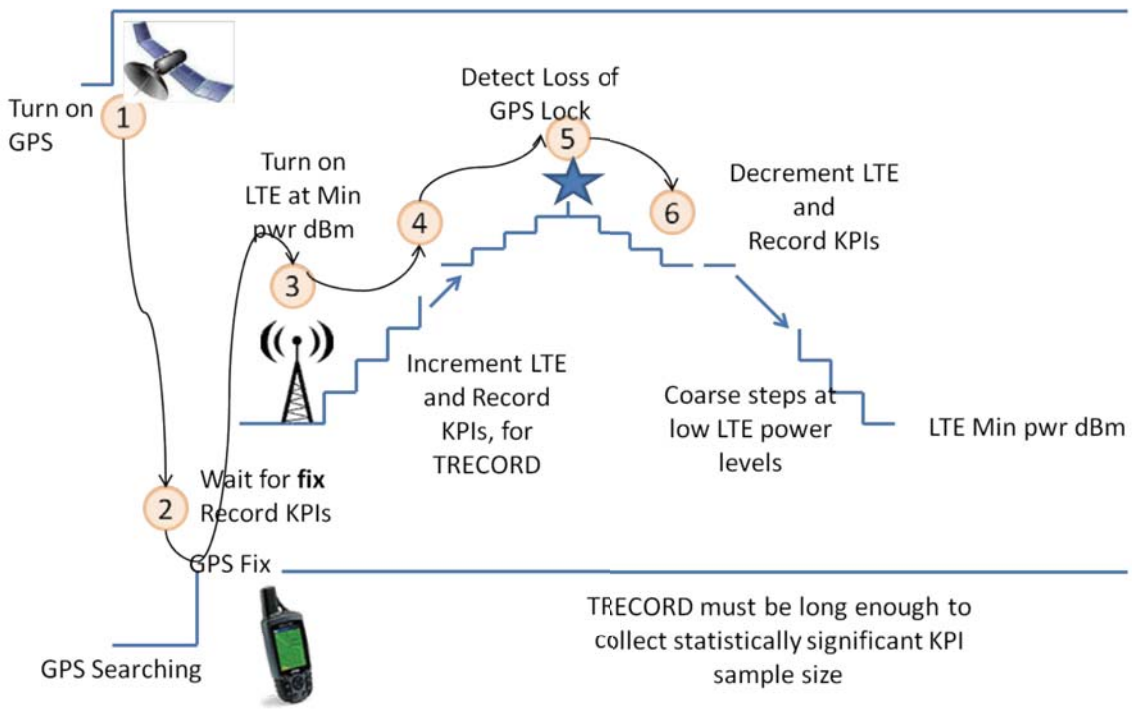

Figure 7 Generic GPS KPI measurement sequence

The pseudo-code description for the MEASURE_KPI_SET() sequence is given below. The parameter TRECORD must be long enough to capture a large enough set of KPI measurements so that statistically valid KPI averages and standard deviations can be calculated. TRECORD may be as long as one minute or more for devices that report KPI values at a low rate.

```
Power GPS device
  Apply GPS signal
  Wait for the GPS receiver to enter the fix-found state
  Adjust GPS source level until received GPS SNR (C/No) is 45
        dB.Hz
  Record baseline GPS NMEA signal parameters, and KPI values for
        TRECORD seconds.
  Apply LTE signal
  Adjust the LTE level until the received LTE signal level is -80
        dBm.
  Loop until LTE level reaches -20 dBm (-10 dBm for select devices).
    record GPS NMEA signal parameters and KPI values for TRECORD
        seconds.
    increase LTE level by (coarse 5 dB then fine 1 dB)
  Loop until LTE level reaches -80 dBm
     record GPS NMEA signal parameters and KPI values for TRECORD
       seconds.
     decrease LTE level by (fine 1 dB then coarse 5 dB)
```

3.2 Aviation Certified Measurements

3.2.1 Aviation Certified situation

Certified aviation GPS receivers have to meet RTCA standards for immunity to adjacent band signals. It is important to understand how the ability of certified aviation receivers to accurately report 3-D position is affected by the presence of LTE signals in the adjacent band.

3.2.2 Desired Goals

Characterize the 3D position error performance of a small sample of certified aviation devices as a function of a constant LTE signal at different levels. The change in position error will be used as the KPI, and compared to the measurement of 1 dB C/No reported by the device. Wide Area Augmentation System (WAAS) message loss rate also will be characterized.

3.2.3 Plan

Measure only a small number of certified aviation GPS receivers. Standard RTCA tests are very involved and include C/No as a performance metric so C/No needs to be collected along with 3D position error to be able to show that the GPS receivers meet and exceed the RTCA standards.

Aviation devices will not be subject to urban canyon effects. The Stressed GPS conditions do not apply.

3.2.4 Assumptions

Access is available to NMEA messages or C/No data.

3.2.5 Test Sequence

The pseudo-code for static measurements is given below

```
Set GPS condition to OPEN
For each downlink frequency band (1531, 1675)
    MEASURE_KPI_SET()
For each uplink frequency band (1631, 1651)
    MEASURE_KPI_SET()
Calculate KPI averages and standard deviations for each LTE level
```

3.3 Aviation (uncertified) Measurements

3.3.1 Aviation (uncertified) situation

Uncertified aviation devices offer a wealth of information to pilots. GPS receiver data is linked to maps, terrain databases, and airport databases. Cellular devices are very widely used and it is likely they will operate in close proximity to aviation devices while a plane is on the ground. Uplink signal levels corresponding to those that might be seen for distances as close as a few meters need to be tested.

Airplanes are also able to view multiple base-stations when in the air at cruising altitudes. Testing with downlink signals is an important consideration at lower altitudes during takeoff and landing.

3.3.2 Desired Goals

Characterize the KPI performance of the latest uncertified aviation devices as a function of a constant LTE signal at different levels. Wide Area Augmentation System (WAAS) message loss rate also will be characterized.

3.3.3 Plan

Measure only the high sales volume devices (listed in device table) and capture and store KPI data as function of LTE signal strength. Independent of market share, include a few devices known/expected to have best in class tolerance to adjacent band power levels. Log true position, and other KPI data from simulator. Plot RMS KPI errors in KPI values vs. LTE signal level and C/No. Aviation devices will not be subject to urban canyon effects. The Stressed GPS conditions do not apply.

Analysis: Compare true position and velocity with received values. Plot absolute and RMS errors of KPIs.

3.3.4 Assumptions

Access is available to 3D location error data and NMEA data.

3.3.5 Test Sequence

The pseudo-code for static measurements is given below

```
Set GPS condition to OPEN
For each downlink frequency band (1531, 1675)
    MEASURE_KPI_SET()
For each uplink frequency band (1631, 1651)
    MEASURE_KPI_SET()
Calculate KPI averages and standard deviations for each LTE level
```

3.4 High Precision Measurements

3.4.1 Situation: High Precision Location

High Precision GPS receivers may have wider RF front end bandwidths than other GPS devices. This is because they need to resolve the ambiguity in carrier phase to achieve centimeter accuracy.

Some also use augmentation signals in the adjacent 1525-1559 MHz MSS band and share the RF front end circuitry between the MSS augmentation signal receiver and the GPS receiver. Others use augmentation signals in the UHF and other bands.

Solutions have been proposed and some demonstrated to allow LTE operation in the L-band.

3.4.2 Goals

First, determine if GPS device performance has improved since 2011. Characterize the performance of the newer high sales volume high precision devices to update the performance baseline.

Second, determine if high immunity antennas are a viable technique to improve interoperability. Test and compare the performance of high precision receivers which use antennas which limit the receive bandwidth to the GNSS band.

3.4.3 Plan

Measure representative high precision GPS receivers, capture and store KPI data as a function of LTE signal strength.

Repeat the measurement with a high interference immunity antenna.

3.4.4 Analysis:

Compare true position with received values. Plot RMS 3D location errors vs. LTE signal levels for each test frequency with and without high immunity antennas present. Plot availability of augmentation signal vs. signal level.

3.4.5 Assumptions

MSS augmentation signals and RTK augmentation signals can be generated and supplied to the GPS device under test.

Access is available to 3D location error data.

3.4.6 Measurement Test Sequence

Pseudo-code for static measurement of high performance GPS receivers is given below

```
For each downlink frequency band (1531, 1675)
  For each GPS condition (Open, stressed)
    MEASURE_KPI_SET()
For each uplink frequency band (1631, 1651)
```

```
  For each GPS condition (Open, stressed)
    MEASURE_KPI_SET()

Enable MSS Augmentation Signal
For each downlink frequency band (1531, 1675)
  For each GPS condition (Open, stressed)
    MEASURE_KPI_SET()
For each uplink frequency band (1631, 1651)
  For each GPS condition (Open, stressed)
    MEASURE_KPI_SET()

Enable RTK Augmentation Signal
For each downlink frequency band (1531, 1675)
  For each GPS condition (Open, stressed)
    MEASURE_KPI_SET()
For each uplink frequency band (1631, 1651)
  For each GPS condition (Open, stressed)
    MEASURE_KPI_SET()
Calculate KPI averages and standard deviations for each LTE level
```

3.4.7 Potential Issues: Augmentation Signals

Certain augmentation signals will likely require cooperation from the manufacturers. GPS signal constellation generators may be able to produce some augmentations signals. Providing an augmentation signal may require a second base unit in addition to the unit being tested.

3.4.8 MSS Augmentation Signal

If a proprietary source of MSS augmentation signal cannot be obtained and installed in time then an alternative is to use available commercial MSS augmentation signals. The schematic in Figure 8 below shows how an external antenna can be used to gather GPS and MSS augmentation signals and apply them to a GPS receiver under test in an anechoic chamber. Without a location reference from a GPS signal generator the "true" location will have to be estimated from a long term average under LTE signal "Off" conditions.

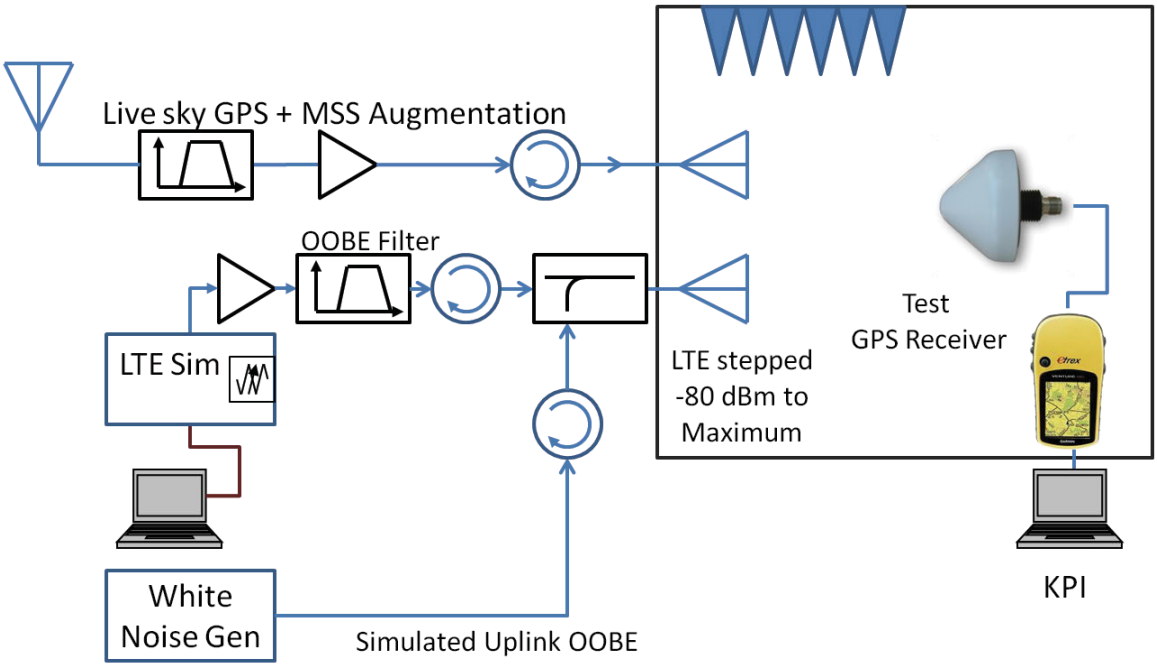

Figure 8 External GPS plus MSS augmentation signal capture

3.4.9 RTK Augmentation Signal

Commercial and public RTK correction data is available from many sources. There are statewide networks and commercial networks that make RTK correction data available over cellular internet connections. The schematic below shows a system for gathering commercial cellular RTK correction data from a cellular or other wireless data network for application to the GPS receiver under test. Note the RTK antenna on the GPS receiver.

An alternative would be to use commercial internet based RTK services as shown in Figure 9 below.

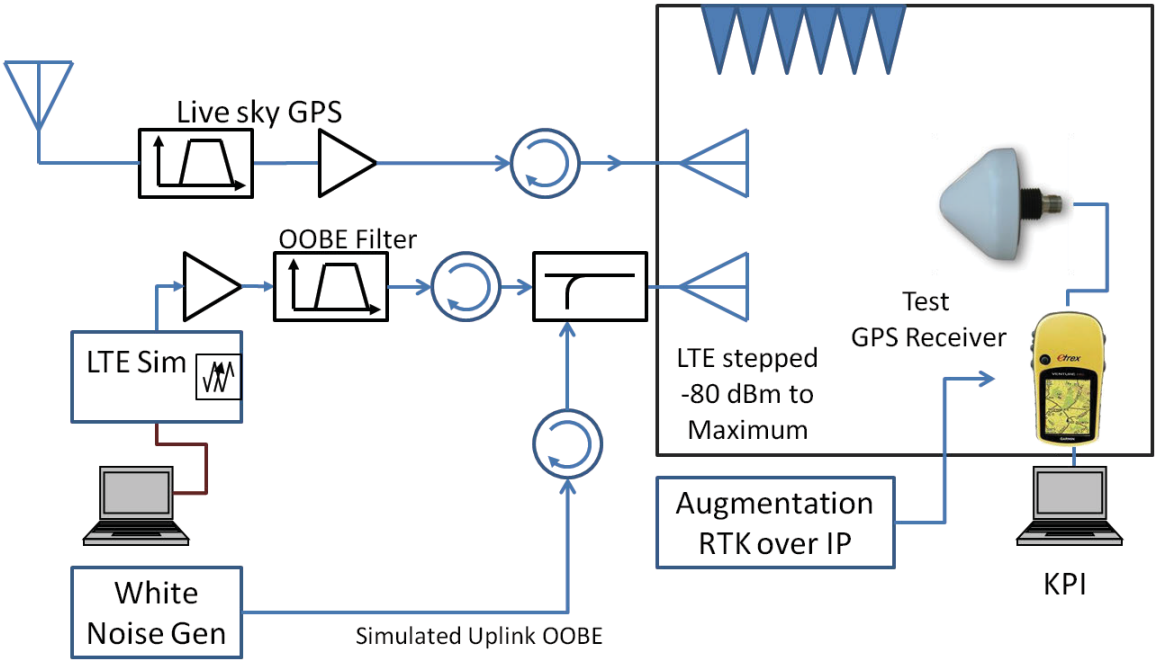

Figure 9 Insertion of commercial RTK into test chamber

3.5 Timing

3.5.1 Situation: High Precision Timing

Timing GPS receivers are used to maintain synchronization among widely distributed network elements, communication system endpoints, power generation, and other types of infrastructure. Timing receivers performed well in earlier testing.

Timing receivers generate timing and frequency reference signals using data from the received GPS satellite signals. Common outputs include a 1 PPS (pulse per second) pulse signal and a 10 MHz frequency reference.

There are antennas that are marketed as resilient. The differences in KPI performance levels seen when resilient and standard antennas are used may be compared.

In practice, Timing Receivers are fixed and carefully positioned such that the stressed GPS condition is not applicable.

3.5.2 Goals

Show that GPS Timing receivers continue to be relatively immune to adjacent band signals.

Show that timing GPS device performance has improved since 2011.

Determine if resilient antennas are superior to standard antennas.

3.5.3 Plan

Measure representative high precision timing GPS receivers and capture and store KPI data as function of LTE signal strength.

Analysis: Compare true KPI timing values with received values. Plot mean and RMS timing errors vs. signal levels for each test frequency.

The measurements may be repeated with narrow bandwidth high immunity antennas.

3.5.4 Assumptions

- Access to the precise 1 pps (pulse per second) output from the GPS constellation generator is available to compare with the 1 pps output from the GPS receiver under test.
- Timing Jitter measurements test equipment is needed to monitor timing KPIs
- Absolute timing error is not difficult to measure

3.5.5 Measurement Test Sequence for Timing Receivers

```
Set GPS condition OPEN
For each downlink frequency band (1531, 1675)
  For each (Resilient Antenna, Standard Antenna)
      MEASURE_KPI_SET()
For each uplink frequency band (1631, 1651)
  For each (Resilient Antenna, Standard Antenna)
    MEASURE_KPI_SET()
```

```
Calculate KPI averages and standard deviations for each LTE level
```

3.6 Cellular Device Measurements

3.6.1 Cellular Device Situation

Cellular devices and smart phones have rapid replacement cycles. Smart-phones are very commonly used for mapping, location, and navigation based on embedded GPS receivers as well as network provided location information. Today's best selling devices were not marketed in 2011. GLONASS capability is now included in high volume GPS chipsets and this capability may have resulted in different RF front end filter characteristics for the embedded GNSS receiver in Cellular devices.

3.6.2 Desired Goals

Characterize the performance of the latest, high sales volume cellular devices to update the performance baseline.

3.6.3 Plan

Measure only the high sales volume devices and capture and store KPI data as function of LTE signal strength.

Analysis: Use TWG defined, 3GPP-adapted test plans, which are based on measuring statistics of 2D position error. Commercial GPS simulators are very capable of supporting the 3GPP test plans.

The Figure 10 below shows the use of a cellular base station simulator to capture 3GPP KPIs.

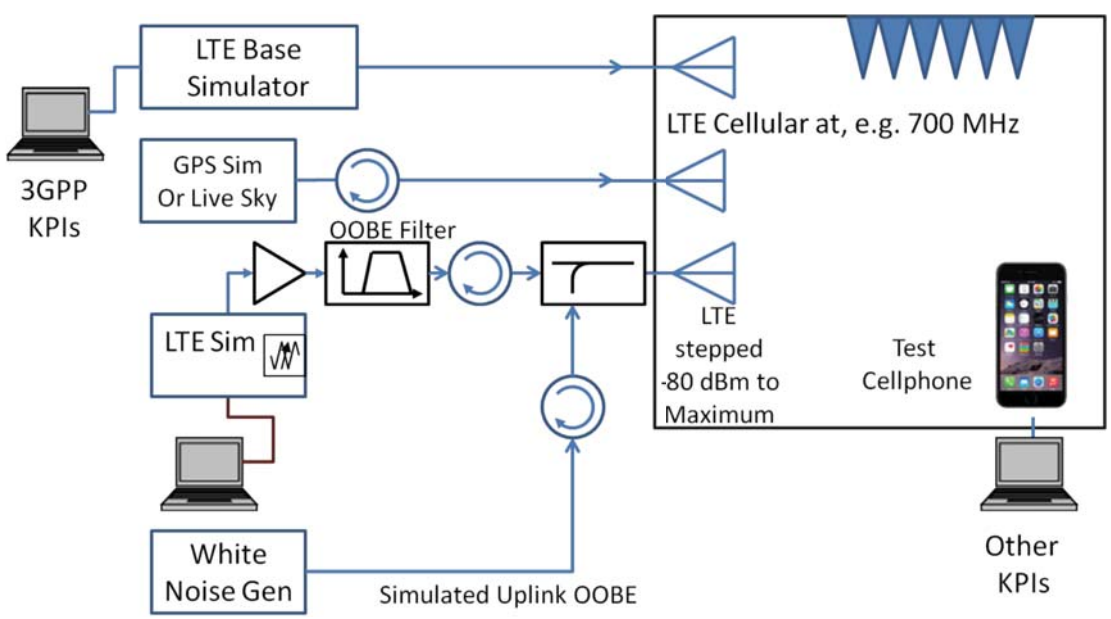

Figure 10 Cell phone KPI measurement with 3GPP base station simulator

3.6.4 Assumptions

GLONASS reception will not be tested but GLONASS signals may be generated depending on equipment availability.

Access to KPIs or NMEA sequences is available and exportable to an external logging system.

3.6.5 Measurement Sequence

A pseudo-code description of the cellular device measurement sequence is listed below.

```
For each downlink frequency band (1531, 1675)
  For each GPS condition (Open, stressed)
    MEASURE_KPI_SET()
For each uplink frequency band (1631, 1651)
  For each GPS condition (Open, stressed)
    MEASURE_KPI_SET()
Calculate KPI averages and standard deviations for each LTE level
```

3.7 General Navigation Device Measurements

3.7.1 General Navigation Situation

In prior testing, General Navigation GPS device were tested with LTE signal levels as high as -15 dBm, a level extremely unlikely to be encountered in a user scenario. The present tests will limit the maximum received power to -20 dBm. Select devices, including public safety devices, may be retested at -10dBm LTE power after initial data collection is performed.

3.7.2 Desired Goals

Characterize the KPI performance of the latest, high sales volume general navigation GPS devices.

3.7.3 Plan

Measure only the high sales volume devices and capture and store detailed KPI data as function of LTE signal strength.

3.7.4 Assumptions

Access to KPIs or NMEA sequences is available and exportable to an external logging system.

3.7.5 Measurement Sequence

A pseudo-code description of the cellular device measurement sequence is listed below.

```
For each downlink frequency band (1531, 1675)
  For each GPS condition (Open, stressed)
    MEASURE_KPI_SET()
For each uplink frequency band (1631, 1651)
  For each GPS condition (Open, stressed)
    MEASURE_KPI_SET()
Calculate KPI averages and standard deviations for each LTE level
```

4 TTFF AND REACQUISITION TESTING

Time to First Fix is a very important KPI for users who transition in and out of GPS coverage and simultaneously in and out of LTE coverage. For example, a public safety user exiting a building could be exposed to a strong LTE signal at the same time the GPS receiver in his two-way radio is re-acquiring GPS signals. The presence of strong adjacent band signals may increase the TTFF. TTFF is tested under cold-start and warm-start conditions which refer to how much information the GPS receiver already possesses about the satellites and the GPS system time.

The goal of TTFF testing is to determine and quantify differences in TTFF as a function of the presence of LTE adjacent band signals and the absence of these signals. The LTE signal levels will be selected to fall in a range above and below the level where significant position errors were observed. The reason for this is to conserve test time in part because TTFF may take several minutes in cold-start mode.

Re-acquisition refers to the situation where lock is lost and the GPS receiver tracking loops need to re-lock onto the GPs signal. If the outage is brief then re-acquiring satellite lock is also rapid.

To test re-acquisition the LTE signal needs to be applied at the level where loss of lock was observed.

4.1.1 Assumptions

- All devices can be reset to a known cold-start state prior to each TTFF measurement.
- Access to a lock indicator is available to be able to determine when the GPS receiver has achieved lock.

4.1.2 TTFF Plan

Apply LTE signals and power up the GPS receiver. Record the time until LOCK is indicated. Reset the GPS receiver and repeat N times.

Calculate average TTFF vs. LTE power for a small set of LTE powers. The figure below illustrates the TTFF measurement sequence.

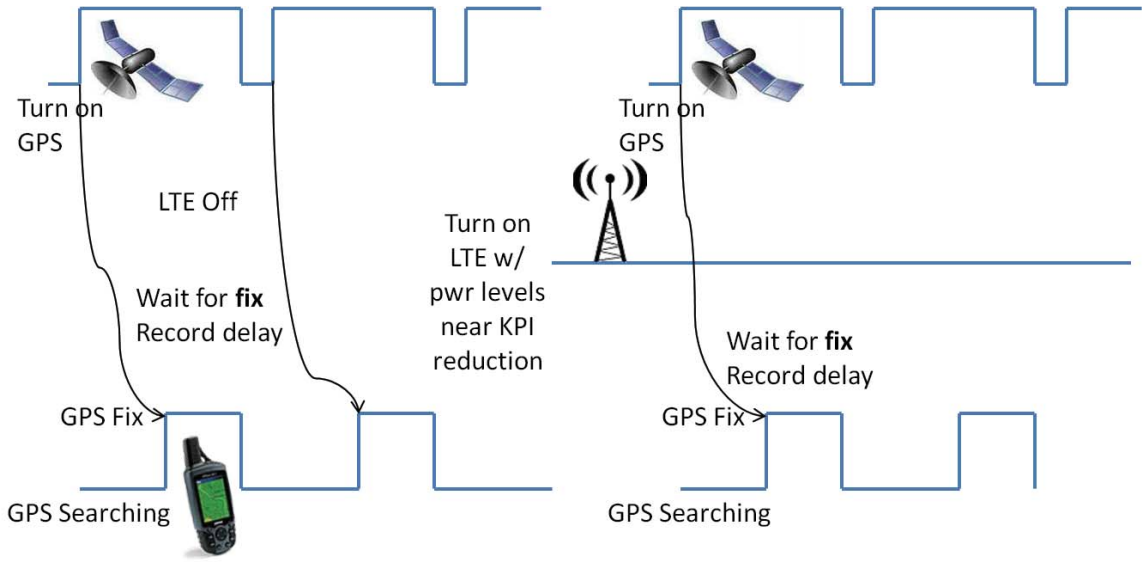

Figure 11 TTFF measurement sequence

Like position error, TTFF will also be subject to random variations from one measurement to another. For each choice of LTE power level, including no LTE signal, a set of TTFF values will be collected. These will be subjected to statistical analysis to determine KPI impact of the LTE signal.

Re-acquisition data may be available from the ramped LTE power tests used to capture position KPI data if the devices loose LOCK at the higher LTE power levels. The LTE power levels where LOCK is lost and the power level where LOCK is regained will be available.

Re-acquisition testing will be performed on public safety devices. The device will be locked onto GPS. GPS signal will be eliminated for a period of time (5 minutes is proposed), device time to relock onto GPS will be measured with and without the presence of a strong LTE signal.

5 ANALYSIS

At each LTE power level many KPI data samples will be collected. The mean and standard deviation of each KPI will be calculated for each power level sample set and logged in one of the KPI, TTFF, or Timing Test Data Tables.

Raw NMEA and other data from GPS devices will be stored in the format it is received in. It is likely that the formats will be different for each device.

Relative changes in the RMS KPI error will be the measure of interference used in later work.

5.1 Statistical Analysis

In order to translate the KPI vs. LTE signal level statistics collected in the measurements to a probability of harmful interference, an analysis is needed to determine the likelihood, frequency, and expected duration that a user will experience LTE levels that cause an increase in KPI standard deviation. Data is available from existing LTE networks that can be used to develop a

statistical model for LTE signal levels on the ground. Scenarios can be developed for the typical movements of a user within the coverage area of an LTE network. Combining these statistics and scenarios with the KPI sensitivities to LTE signal strength will produce a picture of how often and how much the presence of the LTE network will impact users.

6 CHANGE HISTORY

Version	Date	Description
V0.6	June 25, 2015	Preliminary Draft
V0.8	July 22, 2015	Added detail regarding 3GPP specific tests for cell phones Updated Device List Updated KPI Table Updated GPS Impairments table Added detail for pretest scenario: added un-impaired GPS pretest
V1.0	July 27,2015	Version 1.0
V1.1	August 24, 2015	Updates to warm start TTFF section in response to NPSTC. Updates to certified aviation section
V1.2	Sept. 28, 2015	Add WAAS testing added note to test at higher LTE power in response to NPSTC. Added re-acquisition test in response to NPSTC. Updated testing diagrams. Updated OOBE description

Roberson and Associates, LLC
Technology and Management Consultants

GPS Compatibility:
Test Plan Version 1.2 Update
September 30, 2015

Key Updates to Test Plan

- Added WAAS to the GPS signals for RF chamber testing of receivers capable of processing WAAS. This will enable such receivers to improve their baseline position accuracy.
- WAAS (Wide Area Augmentation Signal) message loss rate will be characterized for Aviation devices.
- Add TTFF (Time to First Fix) testing with WAAS (Wide Area Augmentation Signal)
- Additional testing will be performed on select devices, such as public safety devices, up to -10 dBm LTE Power
- For RTK and MSS augmented High Precision receiver testing, schematic was updated.
- Figures 8 - 10 show updated diagrams of the test setups, including the anechoic chamber, for three different classes of GPS receivers. The setups include the simulation of device OOBE (Out of Band Emissions).
    - The current plan is to measure the overload thresholds of GPS receivers with added OOBE noise representing PSD levels expected from commercial LTE devices.
- Public safety devices will be tested for re-acquisition with LTE signals present as requested by NPSTC.

GPS and LightSquared ATC Compatibility Analysis: Overview

- **Why Updated Compatibility Analysis is Necessary**
  - **Knowledge Gained from 2011 TWG**
    - **Understanding of GPS LTE Susceptibility and Compatibility Solutions**
  - **Measure GPS receiver overload thresholds based on KPI degradation, not just 1 dB C/N_0**
  - **Revised LightSquared LTE Deployment Plan: Frequency Bands and LTE Power**
  - **Progress in GPS Receiver Design**

- **Key Elements of 2015 Compatibility Analysis Approach**
  - **Radiated RF Measurements of Key GPS Devices' Susceptibility to LTE Emissions**
  - **Identification of LTE "Threshold of Harm" Level Based on GPS Service (User) Impact**
  - **Statistical Analysis of Geographic and Temporal Impact to GPS in LTE Environment**
  - **Identification of Characteristics of GPS Devices Compatible with LightSquared terrestrial operations.**
  - **Identification of Compatibility Solutions for GPS Devices Not Currently Compatible**

GNSS Spectrum Neighborhood

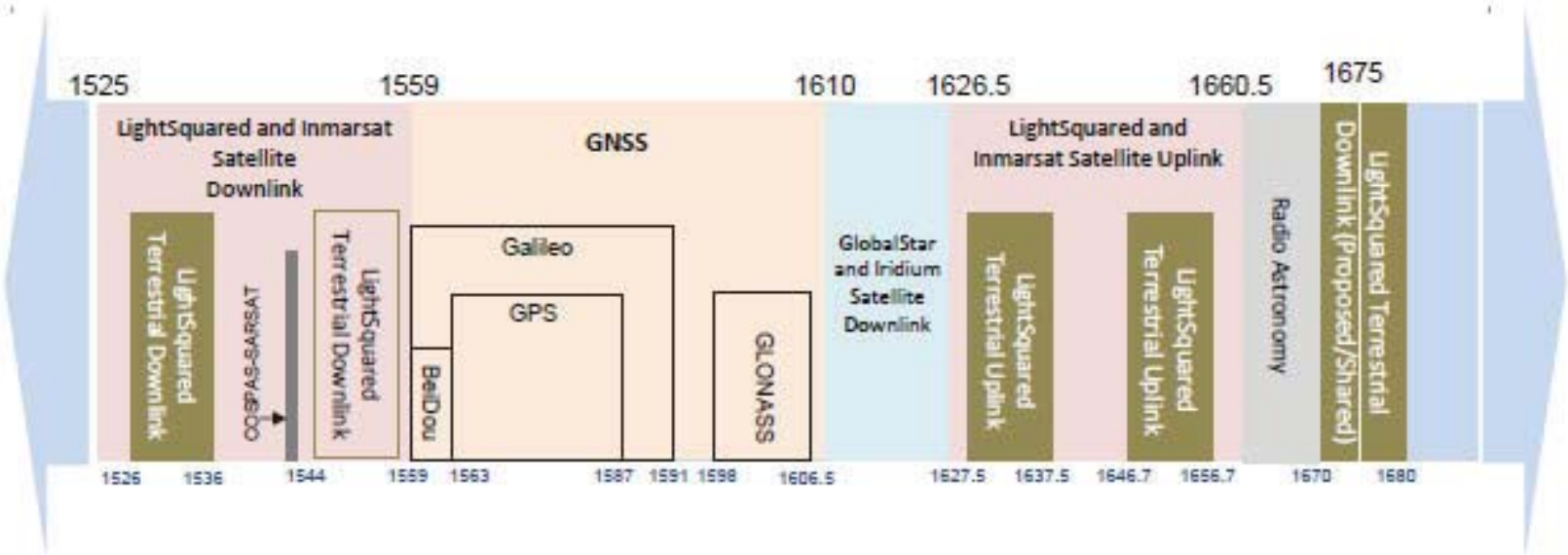

- The spectrum 1559 – 1610 MHz is allocated for GNSS service on global basis
- There are 4 major GNSS systems that share the spectrum.
- These systems use spectral separation as well as coordinated signal overlay that allow for future compatibility of devices that leverage these different GNSS constellations.
- As shown in the figure above, GLONASS signals reside closer to the LightSquared uplinks. Likewise, both BeiDou and Galileo are the lower end of the GNSS band bringing them closer to the LightSquared downlink spectrum

Compatibility Analysis and Solution Identification Methodology

Roberson and Associates, LLC
Technology and Management Consultants

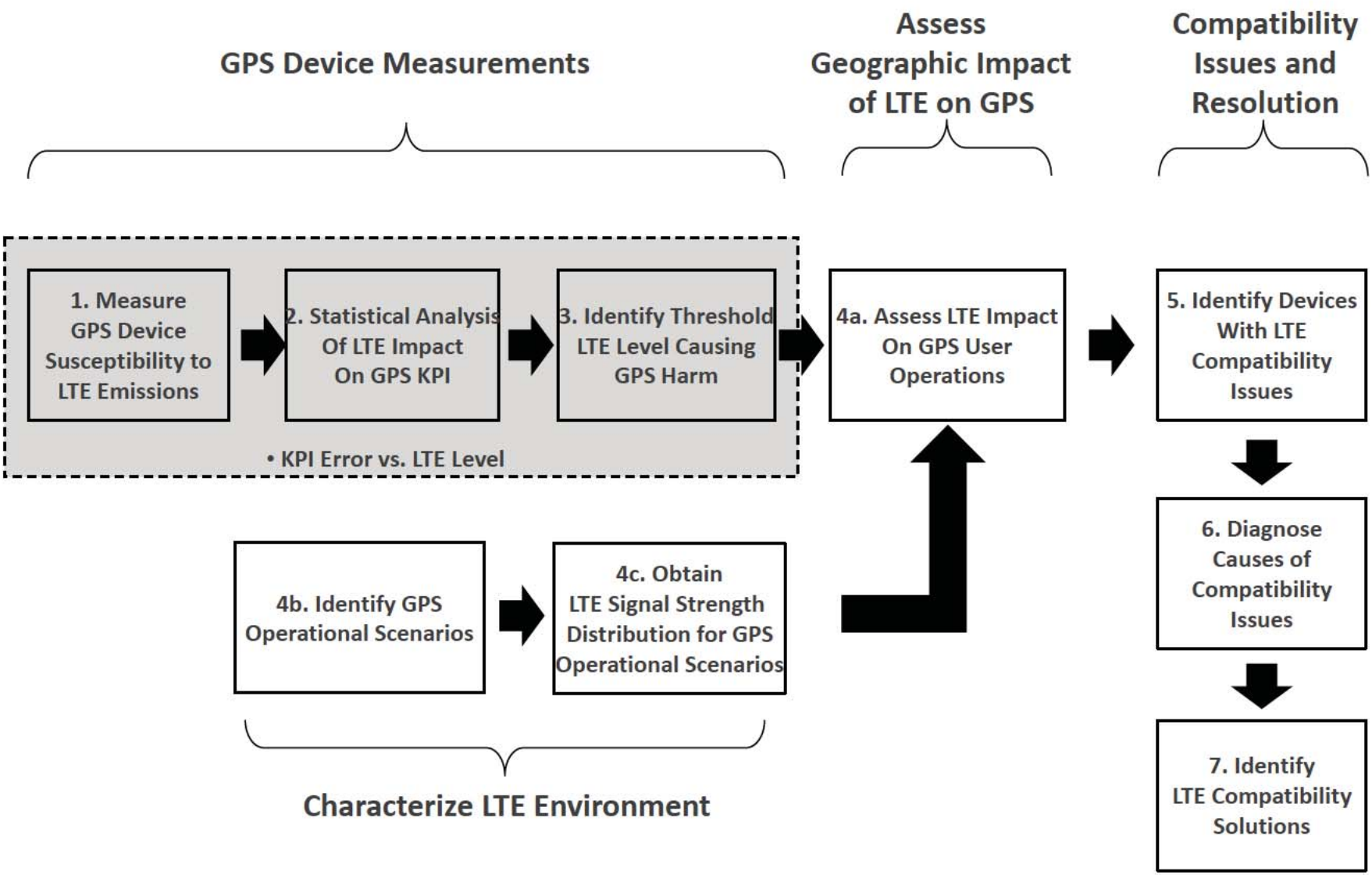

LTE Bands and Throughput

	Frequency Band (MHz)	LTE Throughput (simulated)
Downlink	1526-1536	Max. Throughput
Downlink	1670-1680	Max. Throughput
Uplink*	1627-1637	~ 3.5 Mbps (Streaming Video)
Uplink*	1647-1657	~ 3.5 Mbps (Streaming Video)

* Using actual LTE SC-FDMA uplink signals allocated among subset of resource blocks

Device List (Subject to Availability)

Aviation (certified)
Garmin GTN 625
Avidyne IFD 440
Aviation (non-certified)
Garmin GPSMAP 696
Garmin aera 510
General location and navigation
Garmin Nuvi 2597LMT
Garmin Nuvi 55LM
TomTom VIA 1515M
Alpine In-Dash X008U
Garmin GPSMAP 76 CSx (tested in 2011)
Garmin eTrex H (tested in 2011)
Garmin Nuvi 2495LMT
TomTom Go 50S/60S
Garmin/Panasonic Uconnect 8.4N RB5
Motorola APX 7000
Motorola MW810
Pioneer AVIC-5100NEX
Harman Toyota Entune 86140-02050
Bosch in-dash Nissan 25915CJ0A
Garmin GPSMAP 78 SC
Garmin Montana 650t
Magellan Explorist 350H
Bushnell Onix 400 Waterproof Hiking GPS
Furuno GP32
Wabtek Navigation Sensor Module

Cellular
Apple iPhone 5s
Apple iPhone 6
Samsung Galaxy S5
Samsung Galaxy S6
iPad (w/cellular data)
Samsung Galaxy Tab 4G LTE
High precision
Deere Starfire 3000 (0907PC, 1010, 2010 and 7800)
NovAtel Smart6 or Smart6-L
Topcon SGR-1
Topcon System 310
Trimble AgGPS 542
NAVCOM SF-3050
Trimble Geo 7x
Trimble TM3000
Trimble SPS855 GNSS Receiver
Trimble SPS985 Antenna
Trimble Net R9 or R8s Base RTK for R8s rover
Trimble R8s
Topcon HiPer V
Timing
Arbiter 1088B GPS Satellite Clock (40ns)
Symmetricom 1510-602

KPI Measurement Schematic MSS, Radiated

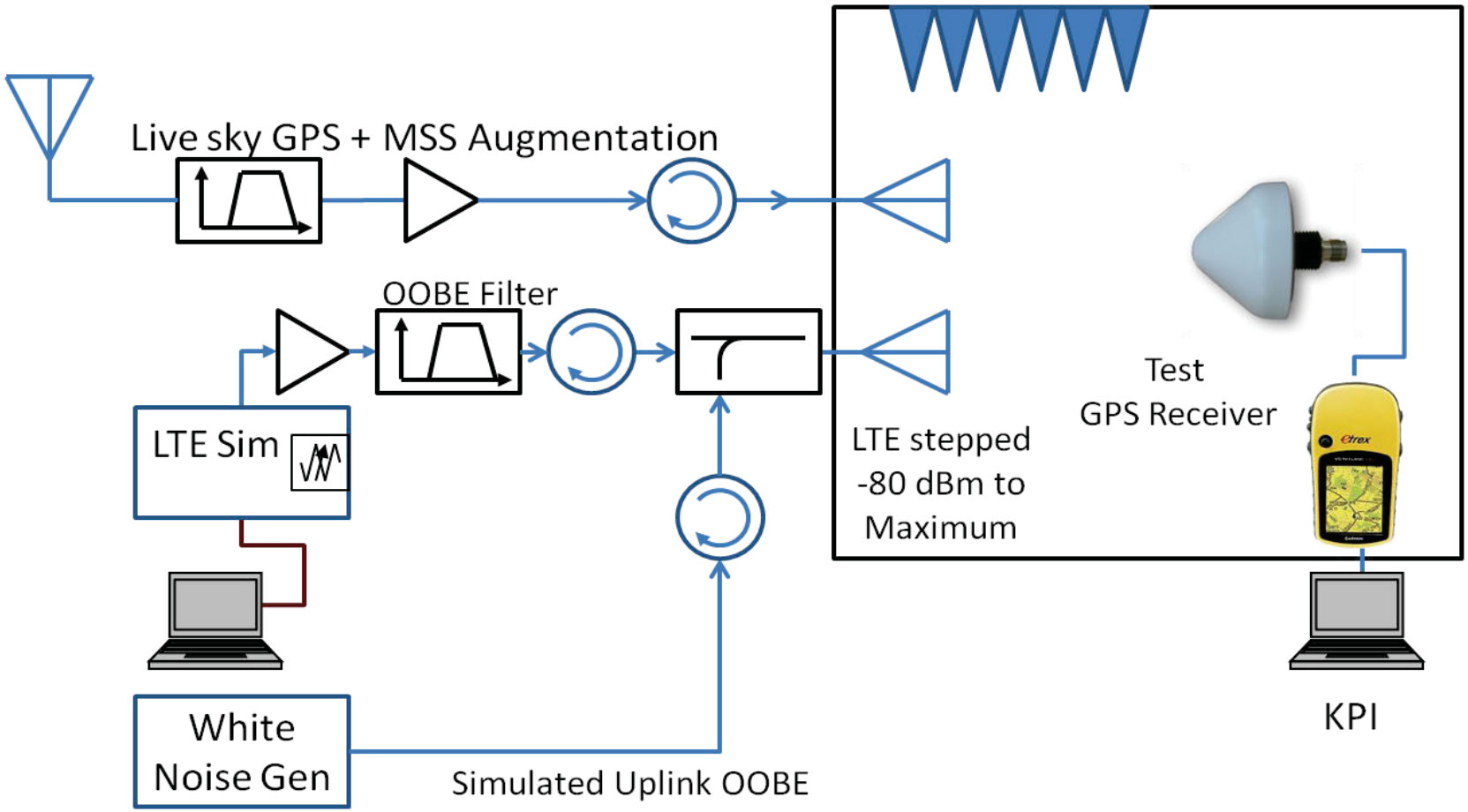

Note: Maximum power shall be -20dBm except for select devices, such as public safety devices, will be tested up to -10dBm

This is an example of a test set up used to collect data

Pictures of Test Bed, Devices Under Test

Pictures of Test Bed, LTE and GPS Antennas

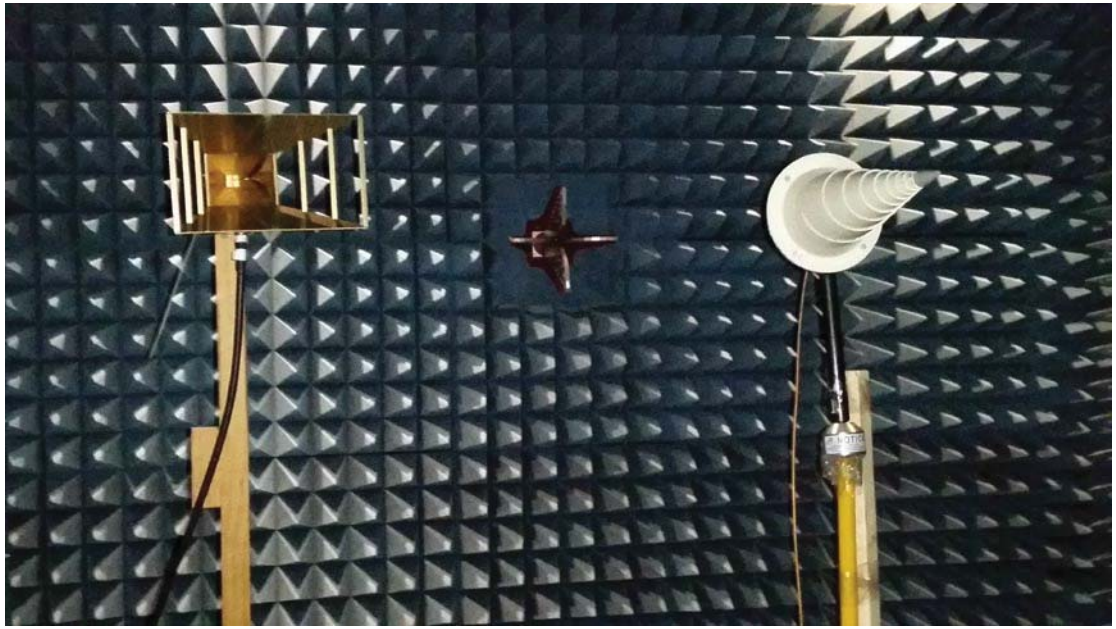

Basic Measurement Sequence

Roberson and Associates, LLC
Technology and Management Consultants

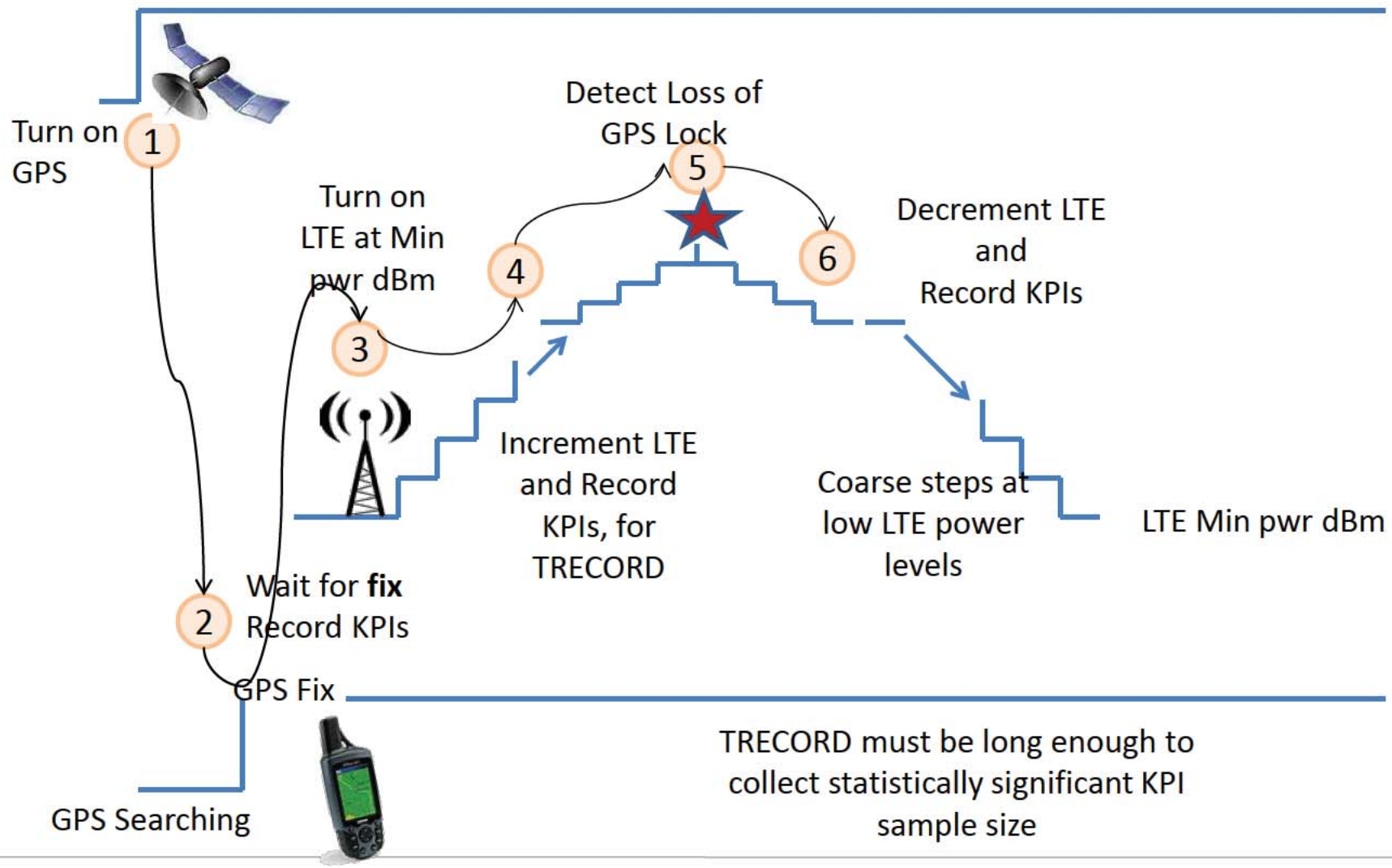

KPI's and System Data Recorded for Device Categories

Roberson and Associates, LLC
Technology and Management Consultants

	Aviation (Cert)	Aviation (Uncert.)	HP (High Precision)	Timing	Cellular	General Nav
KPI	1) 3D Position Error	1) 3D Position Error	1) 3D Position Error 2) Loss of RTK	1) Timing Error	1) 3GPP KPIs 2) 2D Position Error	1) 2D Position Error
System Data	1) C/No 2) WAAS message error rate 3) DOP	1) Satellites in view 2) C/No 3) DOP 4) WAAS message error rate	1) Augmentation Signal Quality 2) Satellites in View 3) C/No 4) DOP	1) Frequency Error 2) Satellites in view 3) C/No 4) DOP	1) Satellites in View 2) C/No 3) DOP	1) Satellites in View 2) C/No 3) DOP