PCIA
The Wireless Infrastructure Association

December 18, 2015

VIA ELECTRONIC FILING

Wireless Telecommunications Bureau
Federal Communications Commission
445 Twelfth Street, S.W.
Washington, D.C. 20554

Re: WTB Seeks Comment on Revising the Historic Preservation Review Process for Small Facility Deployments (WT 15-180)

PCIA – The Wireless Infrastructure Association ("PCIA") and its member companies assembled the following attachment in response to the Federal Communications Commission's ("Commission") request for greater detail regarding the deployment of distributed antenna systems and small cells.

PCIA encourages the Commission to take the attached examples and explanations into consideration as it develops a new program alternative to further streamline the deployment of small wireless communications facilities under Section 106 of the National Historic Preservation Act.

Sincerely,

D. Zachary Champ
Director of Government Affairs
PCIA – The Wireless Infrastructure Association
(703) 535-7407
zac.champ@pcia.com

PCIA
The Wireless Infrastructure Association

Distributed Antenna Systems and Small Cells

Deployment Volume Limits, Large Structures/Deployment Alternatives, and Excavation

December 2015

Volume Limits: Compartment Dimensions

PCIA
The Wireless Infrastructure Association

SECURED CABINETIZED TO INCLUDE REMOTE RADIO HEADS INSIDE

Dual Band Cabinets

SECURITY CABINET ENCLOSURE
72" x 24" x 21" = 21 cuft
Includes RRHs, Power Supply, Batteries

SECURITY CABINET ENCLOSURE
48" x 48" x 21" = 28 cuft
Includes RRHs, Power Supply, Batteries

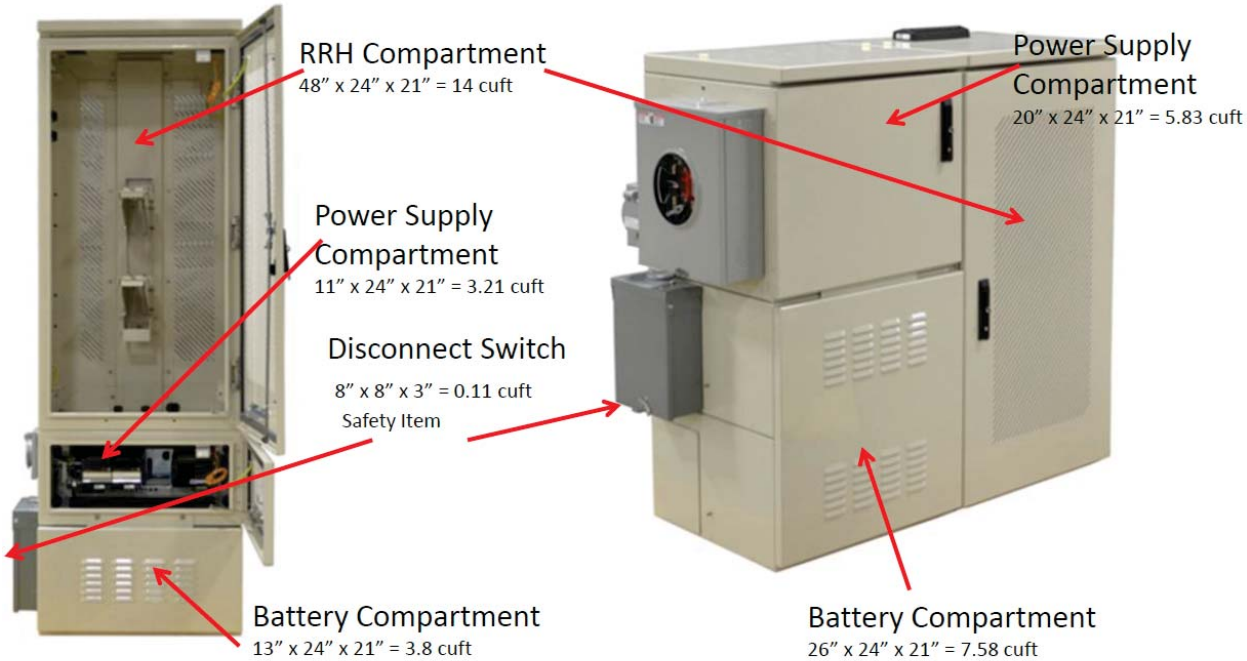

Network Security issues are driving the need for larger cabinets to protect the infrastructure. The cabinets above are under consideration for future deployments. This design also allows for future expansion.

PCIA
The Wireless Infrastructure Association

UNSECURED H-FRAME MOUNTED SMALL CELL

RRH
1.3 cuft Remote Radio Head

Area for future RRH

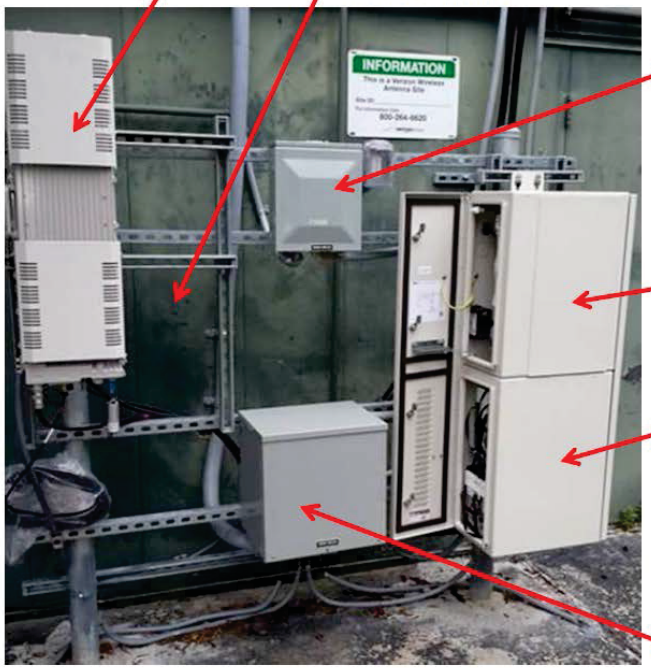

Disconnect Switch
0.11 cuft
Safety Item

Power Distribution System
2.9 cuft

Battery Compartment
2.9 cuft

TELCO DEMARC
0.5 cuft
Non-Verizon Owned

The preference is to keep equipment inside of a cabinet to protect against tampering and to hide the multiple components/wiring that would otherwise be visible on an H-Frame.

PCIA
The Wireless Infrastructure Association

RADIO EQUIPMENT CABINETS						
Type	Width inches	Depth inches	Height inches	Volume Cubic Feet	Area Square Feet	Notes
RBC-36 (radio compartment)	26.3	29.1	33.75	14.95	5.31	Total with Batteries 20.26 cubic ft
RBC-36 (battery compartment)	26.3	29.1	12	5.31	5.31	
Charles Industries (radio compartment)	28	23	51.3	19.12	4.47	Total with Batteries 22.85 cubic ft
Charles Industries (battery compartment)	28	23	10	3.73	4.47	

Charles Cabinet 22 CF

PCIA
The Wireless Infrastructure Association

Equipment Cabinet Example A

28 cu ft dimensions

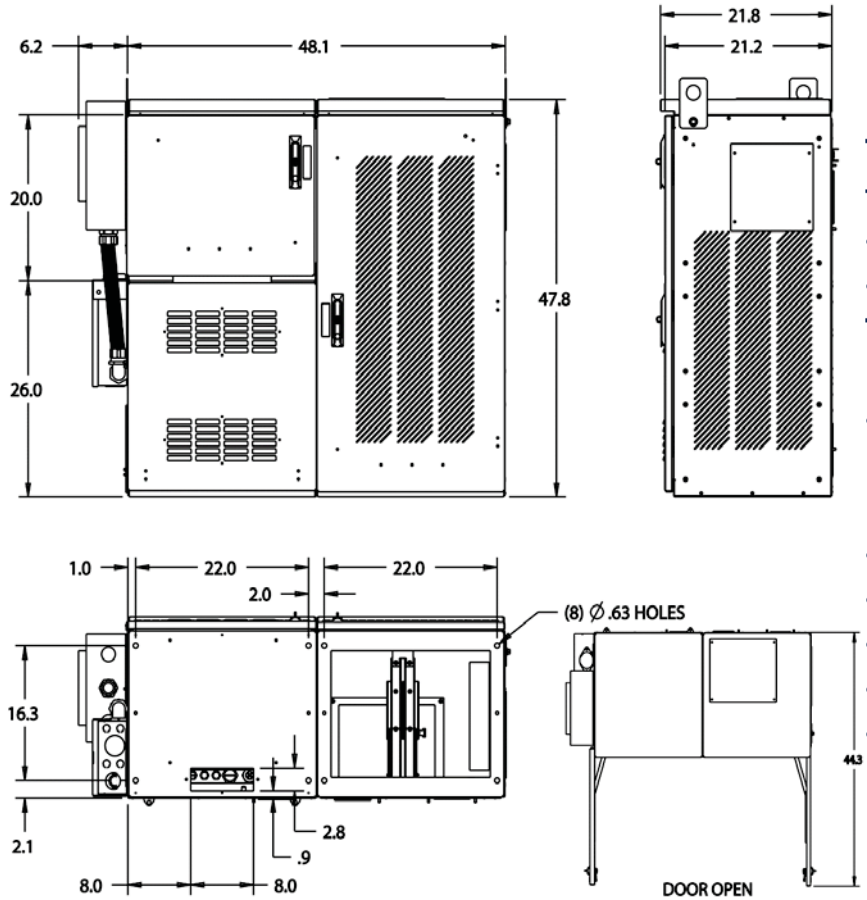

CUBE Dimensions (in inches)

The battery compartment has these key features:

- Front and rear air filters
- Slide-out battery trays with straps

The radio compartment has these key features:

- Padlockable, 216-style quarter-turn door handle with 3-point latch system
- Combiner mounting bracket
- Door alarm indicator/switch
- Door wind latch
- One 2x8-position ground bar
- Pivotal mounting for two radios

PCIA
The Wireless Infrastructure Association

Equipment Cabinet Example A: Compartment Details

28 cu ft total dimensions

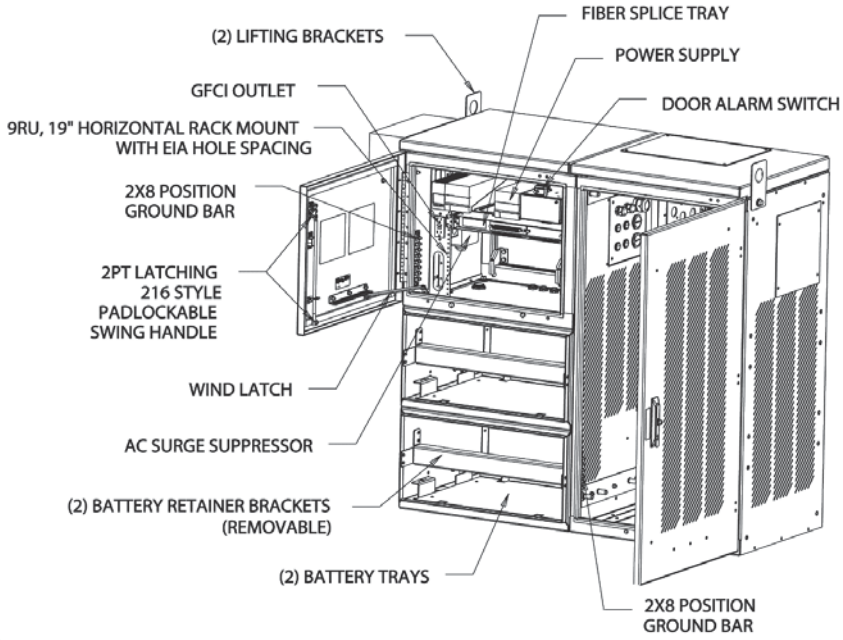

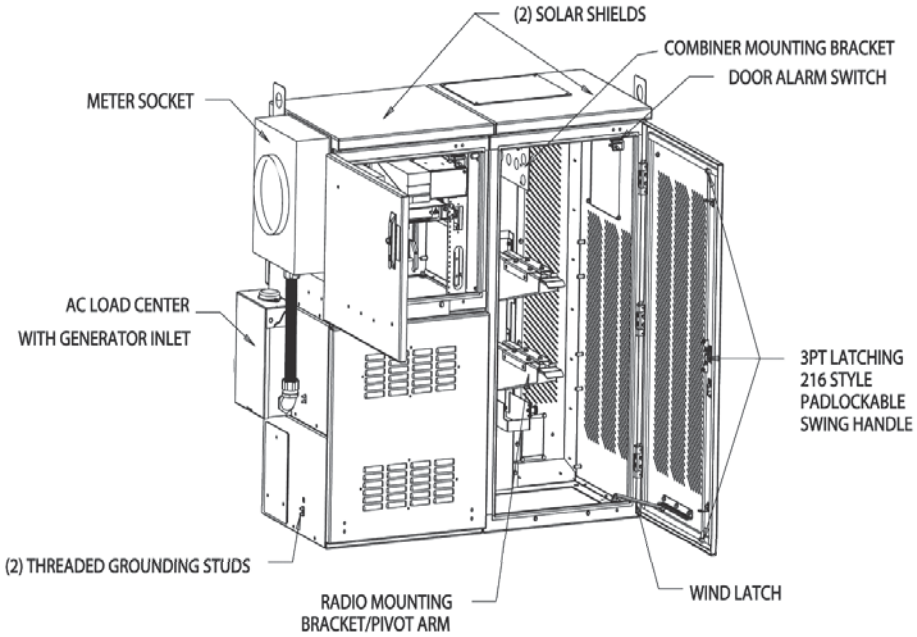

PCIA
The Wireless Infrastructure Association

Equipment Cabinet Example B: Compartment Details

29.8 cu ft total dimensions

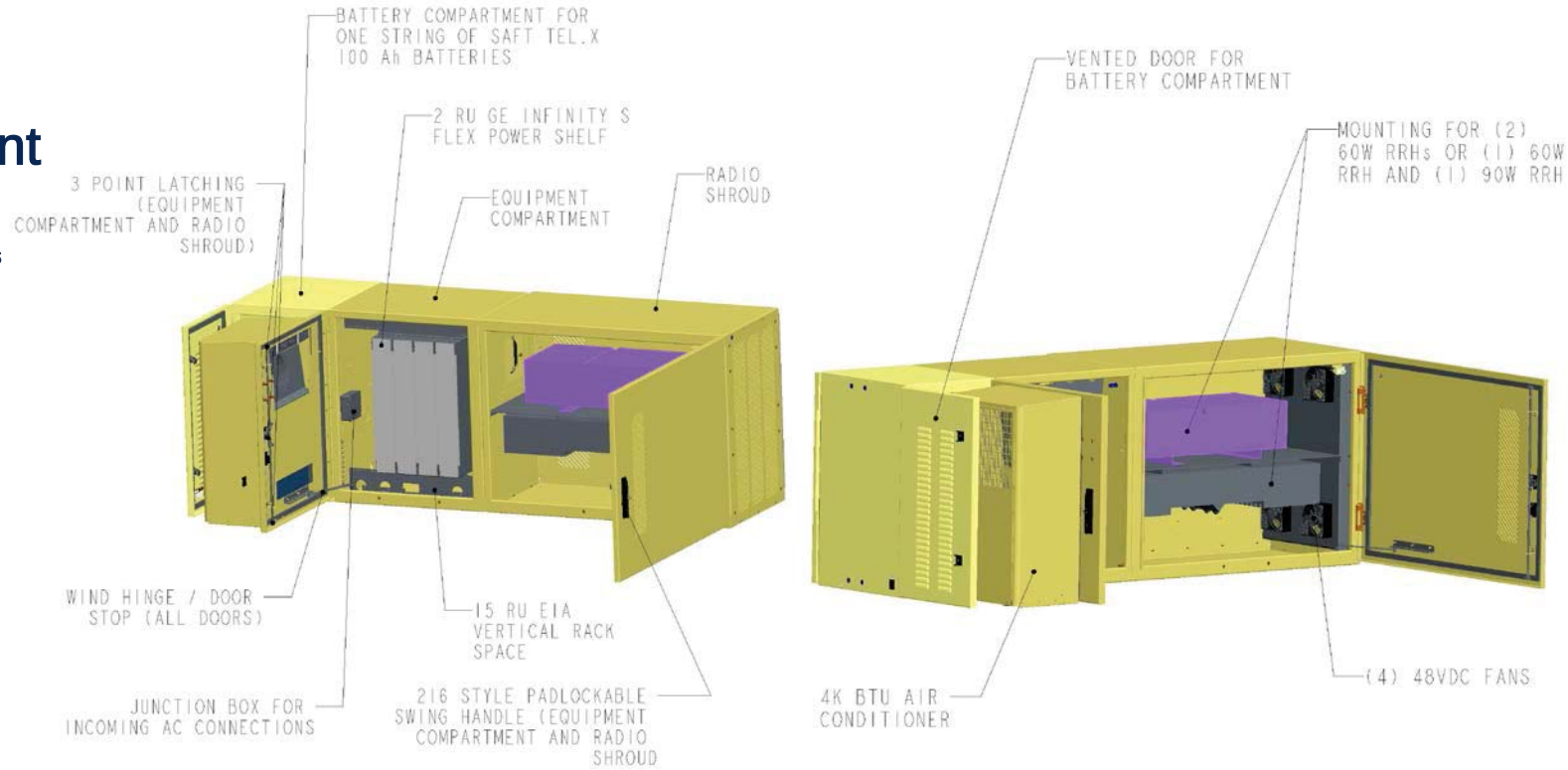

AC cabinet applications have very low noise impact

PCIA
The Wireless Infrastructure Association

Equipment Cabinet Example B

29.8 cu ft dimensions

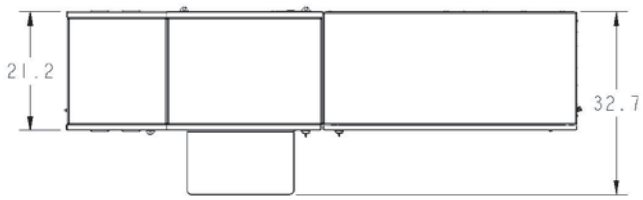

29.8 Cubic Feet

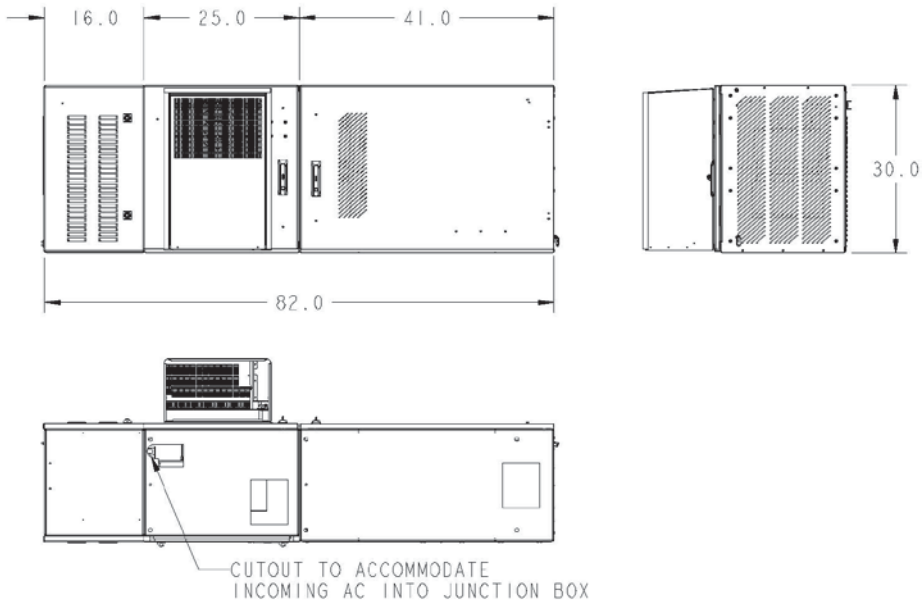

PCIA
The Wireless Infrastructure Association

Equipment on the Pole & Grounded Equipment

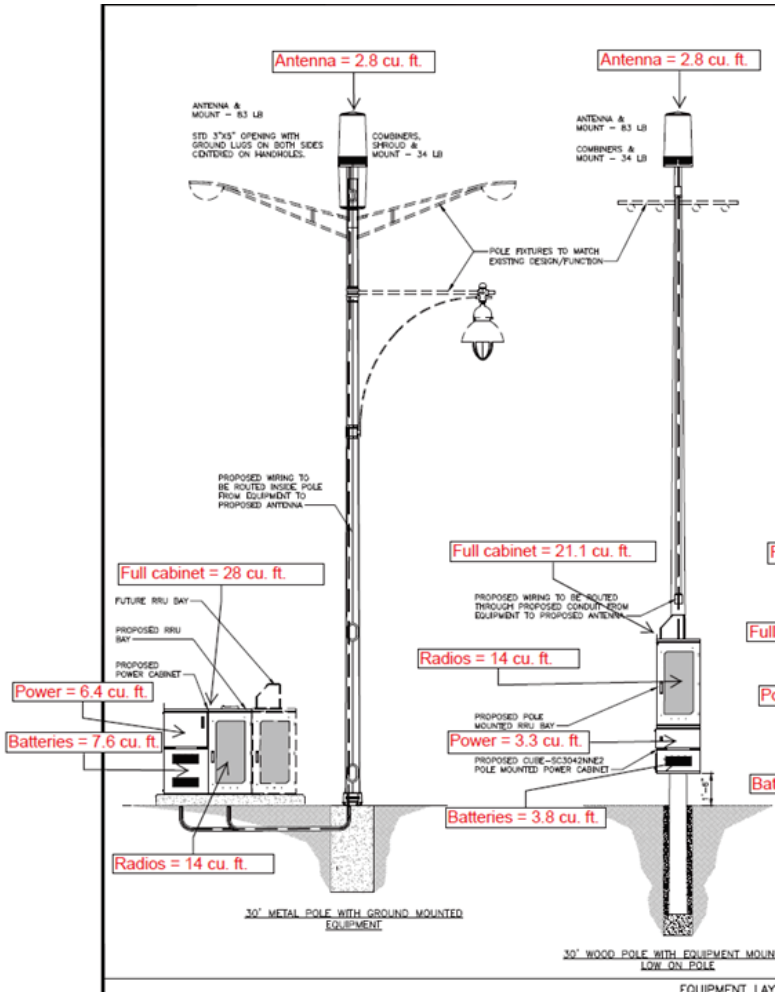

PCIA
The Wireless Infrastructure Association

Volume Limits:
Multi-Carrier Enclosures

PCIA
The Wireless Infrastructure Association

Shroud Dimensions

Shroud Name	Height	Width	Depth	Volume	Weight	Shroud Description
CISH-52	64	23	14	12/24	270	2 - 4 RRUs/RRHs (60W/90W)
CISH-52 + BBU	72	23	16	15.3/30.6	410	2 – 4 RRUs/RRHs (60W/90W) & BBU
SC20942NE2 + BBU	48	48	21	28	326	2 RRUs/RRHs (40 W) & BBU
SC20942NE2 + BBU + Add-on module	48	72	21	42	506	4 RRUs/RRHs (40 W) & BBU
MUSH-40 with integrated BBU	61	37	22	28.5	280	4 RRUs/RRHs (40 W) & BBU
SC21632NP2 + BBU	54	56	22	37	416	2 RRUs/RRHs (60 W) & BBU
SC21632NP2 + BBU + Add-on module	54	88	22	60	480	4 RRUs/RRHs (60 W) & BBU

BBU: Battery Backup Unit; Dimensions in inches; Volume in cubic feet; Weight in lbs.

PCIA
The Wireless Infrastructure Association

CISH-52

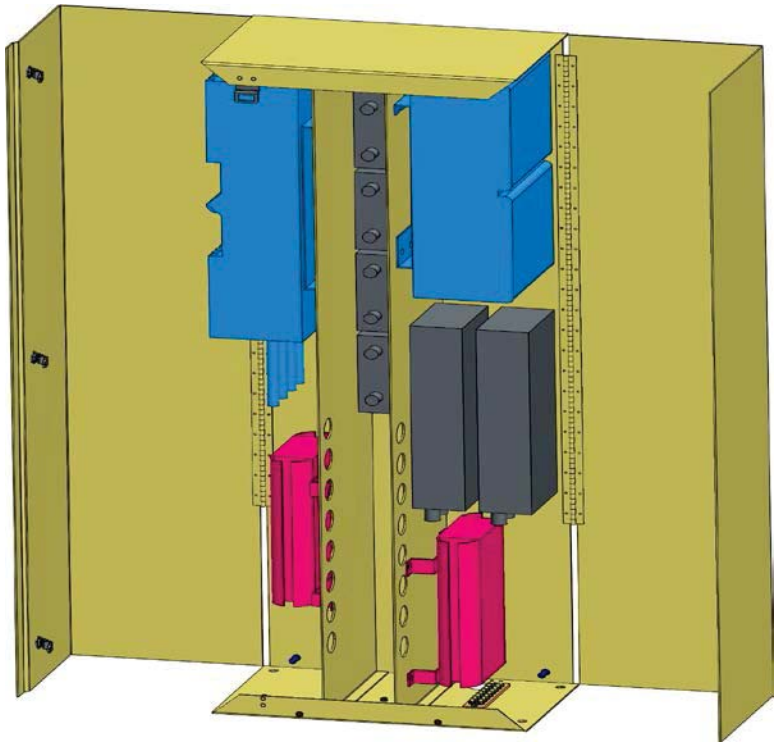

- Dimensions:
  - 64”H x 23”W x 14”D
- Volume:
  - 12 cubic feet
- Weight:
  - 270 lbs
- Capacity:
  - 2 remote (60W/90W) radios
  - Stackable with additional shrouds to accommodate additional radios (24 cubic feet total volume)
- Thermal:
  - Passively cooled, no fans
  - No acoustic noise
  - Vented doors with ~60% surface opening.

PCIA
The Wireless Infrastructure Association

CISH-52 + BBU

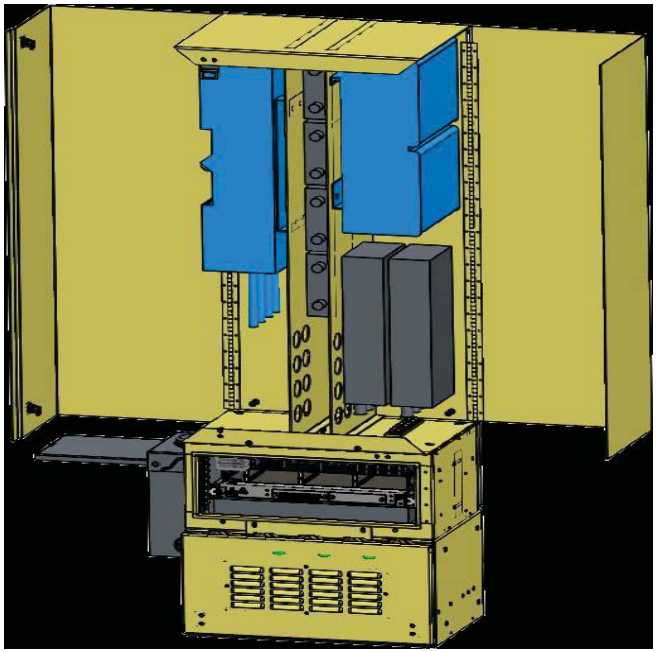

- Dimensions:
  - 72”H x 23”W x 16”D
- Volume:
  - 15.3 cubic feet
- Weight:
  - 410 lbs
- Capacity:
  - 2 remote (60W/90W) radios
  - Stackable with additional shrouds (30.6 cubic feet total volume with one additional shroud)
- BBU:
  - ~1 hour backup
- Thermal:
  - Passively cooled, no fans
  - No acoustic noise
  - Vented doors with ~ 60% surface opening.

PCIA
The Wireless Infrastructure Association

SC20942NE2 + BBU

- Dimensions:
  - 48”H x 48”W x 21”D
- Volume:
  - 28 cubic feet
- Weight:
  - 326 lbs.
- Capacity:
  - 2 remote (40W) radio
  - Additional 2 remote (40W) radio add-on cabinet allows for 2 additional radios. Total dimensions with add on:
    - D: 48”H X 72”W x 21”D
    - V: 42 cubic feet
  - Shrouds modules can be mounted vertically or horizontally
- BBU:
  - ~2 hour backup with 2 remote radios

PCIA
The Wireless Infrastructure Association

MUSH-40 with integrated BBU

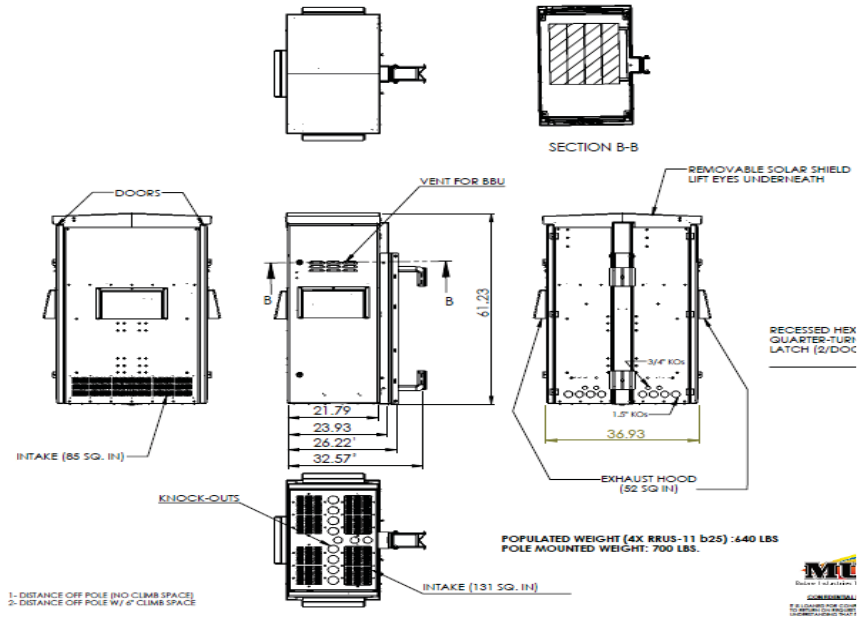

- Dimensions:
  - 61”H x 37”W x 22”D
- Volume:
  - 28.5 cubic feet
- Weight:
  - 280 lbs
- Capacity:
  - Up to 4 remote (40W) radios
- BBU:
  - ~1 hour backup with 4 remote radios

PCIA
The Wireless Infrastructure Association

MUSH-40

MUSH-40 Ground Mount

MUSH-40 Pole Mount

PCIA
The Wireless Infrastructure Association

SC21632NP2 + BBU

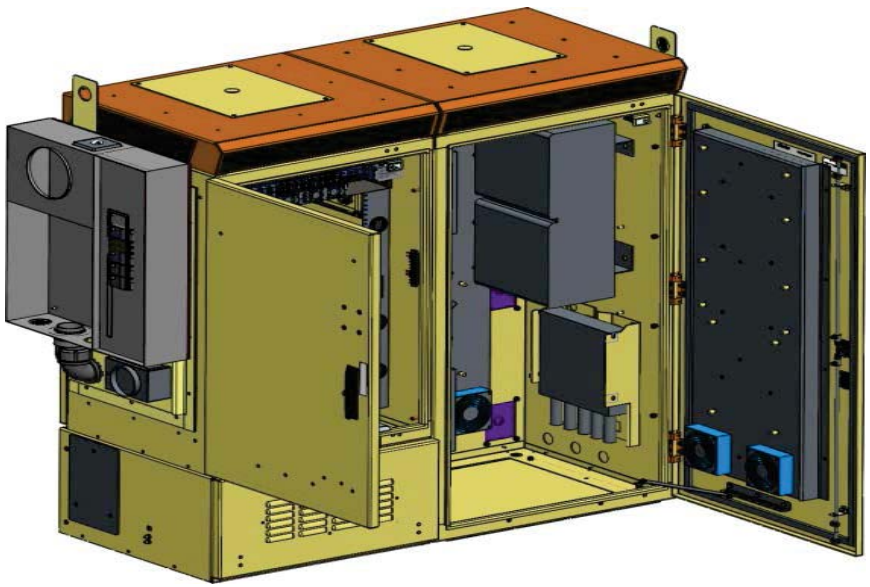

- Dimensions:
  - 54”H x 56”W x 22”D
- Volume:
  - 37cubic feet
- Weight:
  - 326 lbs.
- Capacity:
  - 2 remote (60W) radio
  - Additional 2 remote (60W) radio add-on cabinet allows for 2 additional radios. Total dimensions with add-on:
    - D: 54”H X 88”W x 22”D
    - V: 60 cubic feet
  - Shroud modules can be mounted vertically or horizontally
- BBU:
  - ~2 hour backup with 2 remote radios

PCIA
The Wireless Infrastructure Association

Cabinet and Antenna Separation

- The coax line should be no more than 75 feet from the cabinet to the antenna.
- For best quality, the preference is to keep the radio close to the antenna.

PCIA
The Wireless Infrastructure Association

Large Structures & Other Alternative Deployments

PCIA
The Wireless Infrastructure Association

Wall Mounted Equipment (23.72 CF)

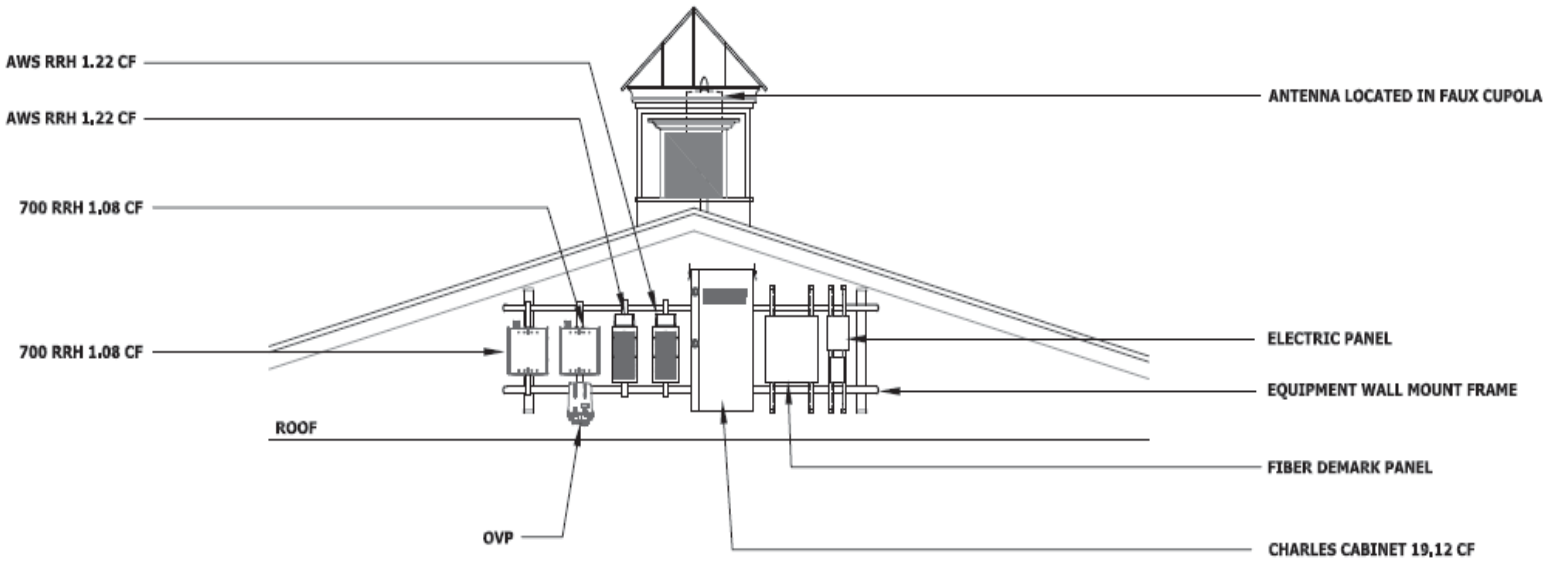

EQUIPMENT ELEVATION

SCALE: 1/8" = 1'-0"

0 8 16 FT

Cabinet = 19.12 CF - Houses the router, electric service equipment and 8-hours of backup batteries

PCIA
The Wireless Infrastructure Association

Wall Mounted Equipment (23.72 CF)

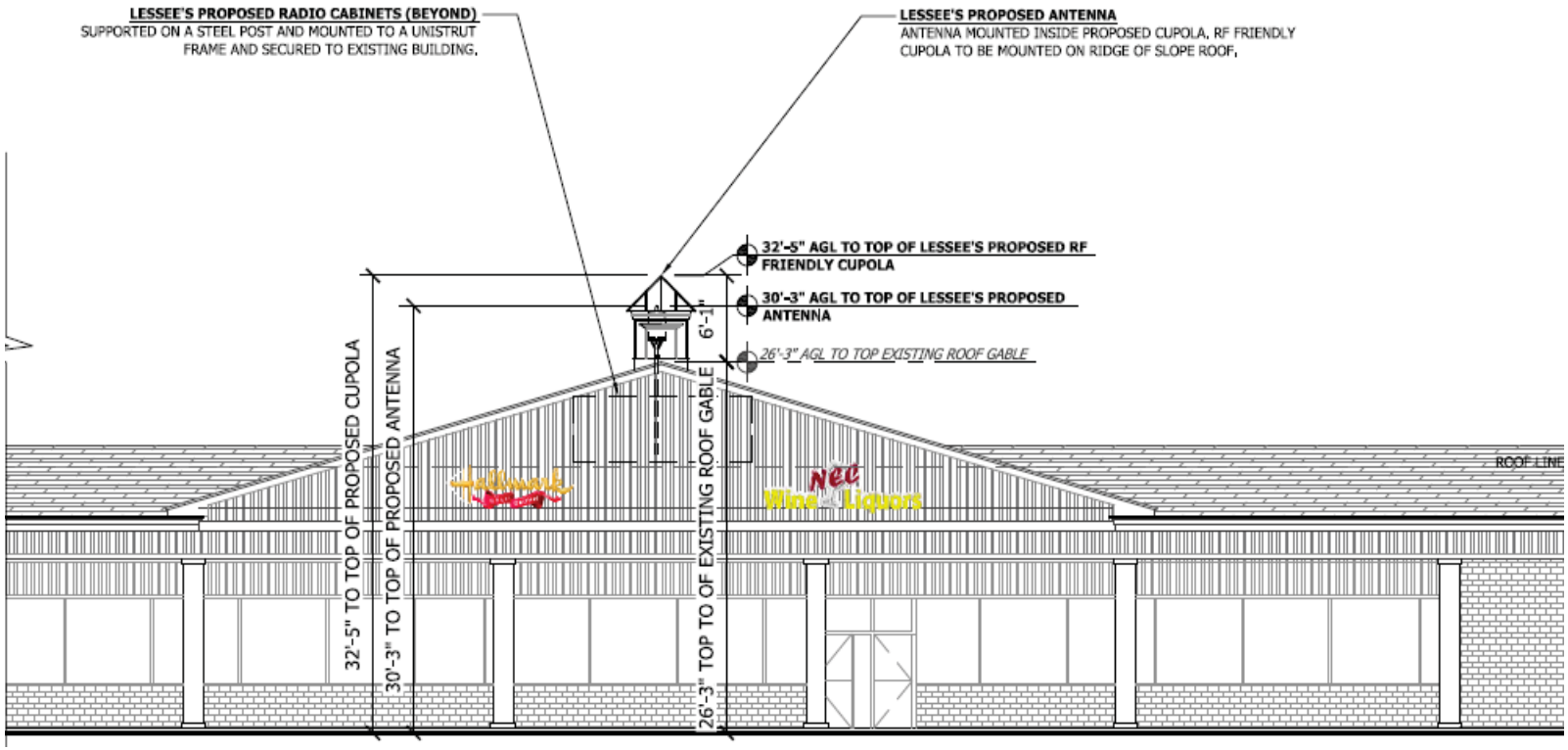

PCIA
The Wireless Infrastructure Association

Wall & Platform Mounted Deployments

sizes vary depending on what equipment is being mounted, how it is mounted, and the weight and handling capacity of the floor or wall

Cell Cabinet

19.92 cuft

Includes Radio Transmitter, Power Supply, and Batteries

TELCO DEMARC

0.5 cuft

Non-Verizon Owned

Disconnect Switch

0.11 cuft

Safety Item

Larger cabinet allows for the use of higher power radios to overcome loss in the coax runs and provides flexibility to add additional/future capacity at the same location by adding additional radios rather than building multiple locations with a single frequency.

PCIA

The Wireless Infrastructure Association

VERIZON WIRELESS SMALL NETWORK NODE DESIGN
"VERNON 2 LODGE"

GROUND MOUNTED EQUIPMENT ADJACENT TO A BUILDING

23.72 CF

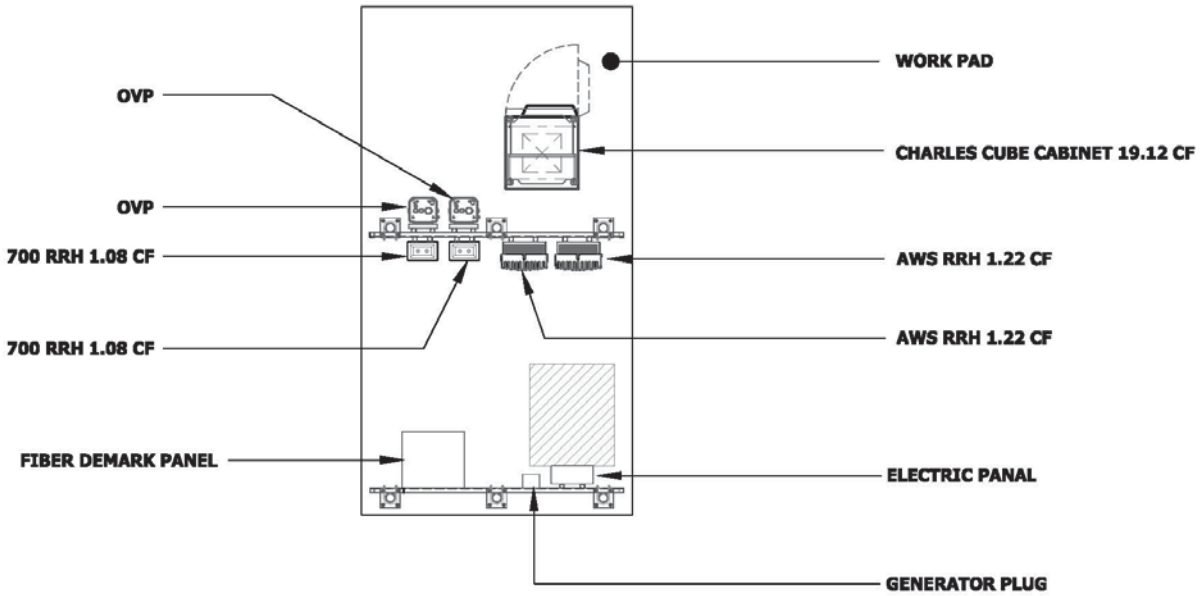

EQUIPMENT PLAN

SCALE: 1/4" = 1'-0"

0 4 8FT

PCIA
The Wireless Infrastructure Association

VERIZON WIRELESS SMALL NETWORK NODE DESIGN
"NATCO LAKE SC"
EQUIPMENT ROOF PLATFORM

23.72 CF

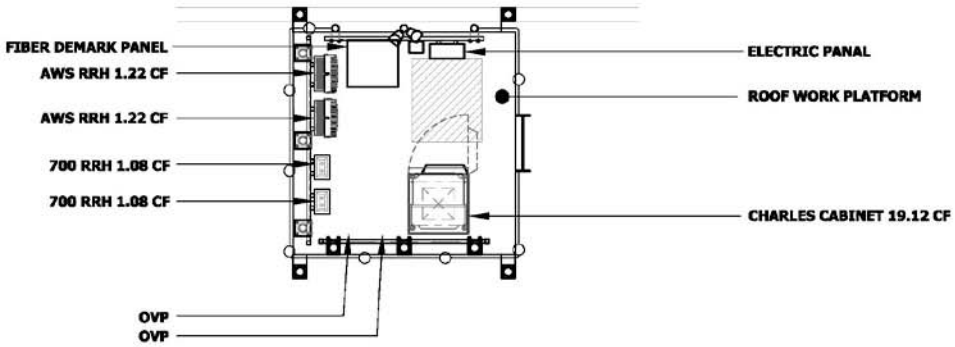

EQUIPMENT PLAN

SCALE: 1/4" = 1'-0"

0 4 8FT

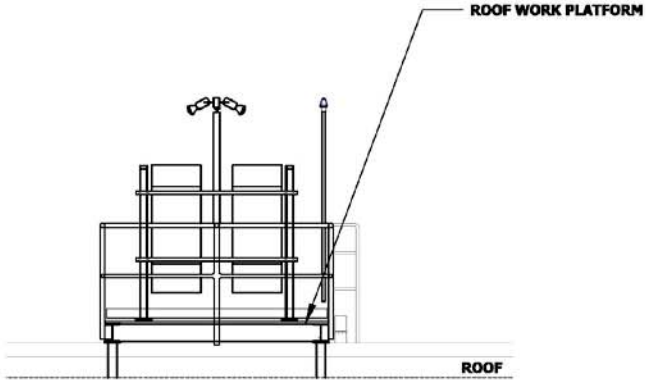

EQUIPMENT ELEVATION

SCALE: 1/8" = 1'-0"

0 8 16 FT

PCIA
The Wireless Infrastructure Association

20865	EBI	WE-Northern California/Nevada	One antenna on the roof of a c.1940s building, Equipment on side of building, but visible location. Antenna under 3CF, Equipment over 17CF	No Historic Properties	No Effect

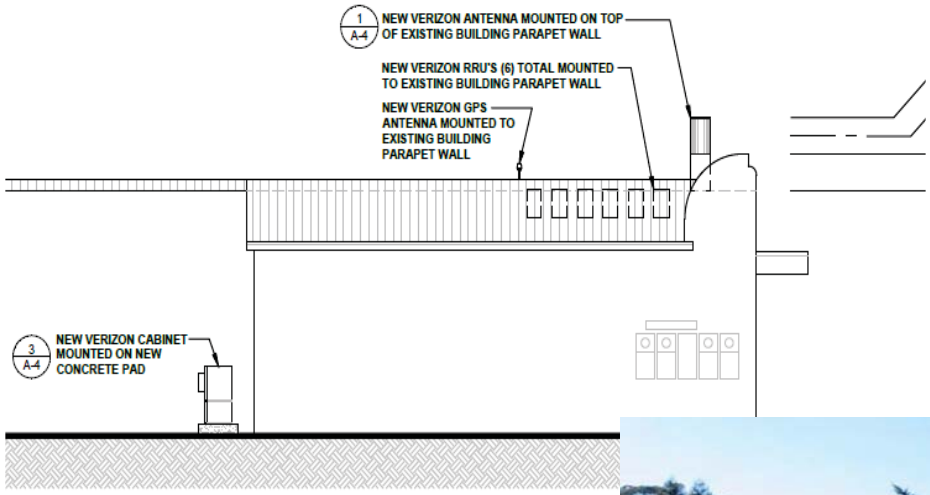

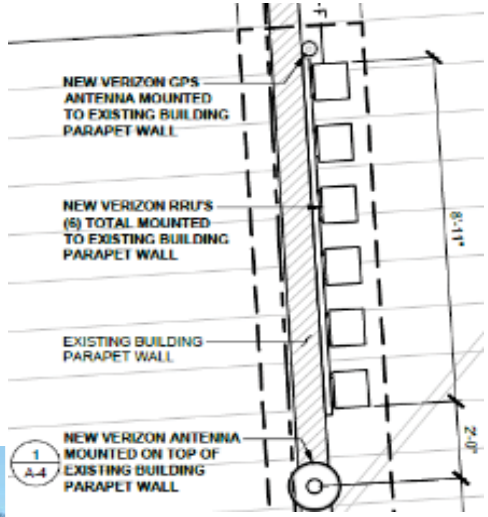

PCIA
The Wireless Infrastructure Association

Proposed Metro Cell Cabinet Mounted at Existing Pavilion

PCIA
The Wireless Infrastructure Association

Strand Mounted Small Cell

(small non-pole structure that supports small deployments)

No antennas will be mounted to the existing utility pole and no ground disturbance for placement of battery cabinets.

PCIA
The Wireless Infrastructure Association

Excavations

PCIA
The Wireless Infrastructure Association

Example of an Excavation Supporting a Small Deployment

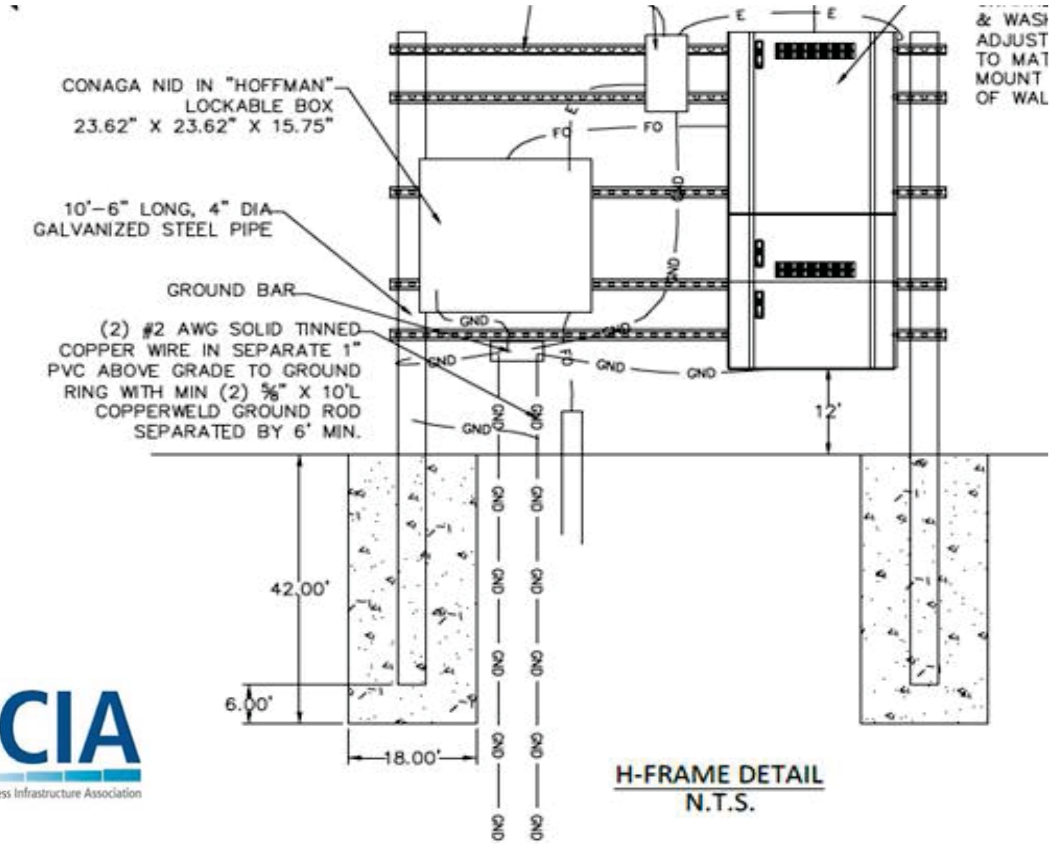

- Whether excavation is required depends on the scale and location of the project.
- Roughly, excavation is needed for 20%-30% of DAS or small cell deployments.
- Excavation depth varies by region of the country, local code, and type of project—a few inches to a few feet.
- Typically, excavation proceeds to a depth of 18” to 42”.
- Typically, power transmission or distribution cables are situated below the communication space with a required separation of 12 inches by NESC code.

Consequences of Two-Foot Buffer

- Two-foot ground disturbance buffer unnecessarily subjects to Section 106 review small cell and DAS deployments that have a minimal risk of impacting archaeological artifacts.
- Existing disturbances may often only be a matter of a few feet or less for various reasons (sidewalks, curbs, medians, grading for parking lots or other public or private areas)
- Establishing a two foot buffer in these situations would essentially eliminate any opportunity to apply that exclusion for even the most minimal type of disturbance such as leveling the ground to pour a pad, digging just below the frost line when there might be a need for a more stable foundation, or placing electrical grounding.

PCIA
The Wireless Infrastructure Association

The Two-Foot Buffer is Unnecessary

1. The record does not show that a two-foot buffer protects archaeological artifacts any better than no buffer.
2. The ground of a right-of-way is already subject to ground disturbance. In an active right of way, the ground either already has been disturbed or will be disturbed. Depending on the location, utilities and municipal entities are authorized to disturb the ground down to whatever depth they need, without always undertaking Section 106 review.
3. Ground disturbance from DAS and small cells is benign. The two-foot buffer derives from the Section 106 NPA, which was intended to apply to towers, with deep foundation excavation, and should not be used for defining the risk of potential impacts for the less intrusive ground disturbance expected from a small cell and DAS facility. The FCC has recognized that not all ground disturbances are created alike, as ground disturbance accompanying tower replacements and collocations on towers are already excluded from Section 106 review because they have minimal impact. The placement of new poles in the right of way is already exempt under the 2004 NPA.
4. The Section 106 NPA already requires carriers to cease work if unanticipated discoveries occur, which is a more narrowly drawn means to ensure the continued protection of unknown archaeological artifacts than a prophylactic prohibition of ground disturbance in an area that may have no artifacts at all.

PCIA
The Wireless Infrastructure Association

CONCLUSION

- Small wireless communications facilities allow for increased coverage, capacity, spectral efficiency and overall broadband penetration

- A streamlined wireless communications facilities siting process with additional Section 106 review exclusions is necessary to incentivize and expedite broadband deployment to reach our nation's growing broadband demand

PCIA
The Wireless Infrastructure Association