BEFORE THE
FEDERAL COMMUNICATIONS COMMISSION
WASHINGTON, D.C. 20554

In the Matter of	)	
	)	
Expanding Consumers' Video Navigation Choices	)	MB Docket No. 16-42
	)	
	)	
Commercial Availability of Navigation Devices	)	CS Docket No. 97-80

COMMENTS OF THE NATIONAL CABLE & TELECOMMUNICATIONS ASSOCIATION

Rick Chessen
Neal M. Goldberg
National Cable & Telecommunications Association
25 Massachusetts Avenue, N.W. – Suite 100
Washington, D.C. 20001-1431

Paul Glist
Paul Hudson
Davis Wright Tremaine LLP
1919 Pennsylvania Avenue N.W. – Suite 800
Washington, D.C. 20006-3401

April 22, 2016

TABLE OF CONTENTS

Page

EXECUTIVE SUMMARY 2

I. THE MARKET HAS BEEN TRANSFORMED BY NEW AND EXPANDING MEANS FOR ENJOYING MULTICHANNEL SERVICE ON RETAIL DEVICES 9

A. Video Choices for Consumers Have Expanded Dramatically Beyond the Cable Set-Top Boxes Available in 1996 9

B. MVPD Apps Support More Retail Devices than Set-Top Boxes, and Keep Expanding 11

C. Programmers are Embracing New Distributors and Apps 14

D. Apps Provide a Path for Eliminating Set-Top Boxes 16

II. THE PROPOSED SET-TOP BOX MANDATE WOULD POSE GRAVE RISKS TO PROGRAMMING AND INNOVATION FOR LITTLE CONSUMER BENEFIT 18

A. The NPRM Would Disassemble MVPD Service 18

B. A Preview of Consequences: Higher Costs, More Boxes, More Ads; and Less Service, Programming, Security and Innovation 18

III. THE NPRM IS DIVORCED FROM MARKET REALITIES 22

A. The FCC Has Artificially Defined Its Own Market Failure 23

B. Consumers Have Spoken: Apps, Not Replacement Guides, Are Driving Retail Device Success 24

C. Apps Do Not Commoditize Retail Devices – They Enrich Them 26

D. Consumers, Standards Bodies, Device Manufacturers and Technologists Worldwide Refute the FCC's Approach 29

IV. THE PROPOSED MANDATE WOULD UNDERMINE THE COPYRIGHT AND LICENSING PROTECTIONS THAT ARE NECESSARY TO SUSTAIN HIGH-QUALITY PROGRAMMING 31

A. The Proposed Mandate Would Undermine the Intellectual Property Foundation and License Agreements that Sustain Today's Golden Age of Television 33

B. The Proposed Mandate Would Undo the Channel and Neighborhood Placements That Define How Programmers Connect to Their Audiences 41

C. The Proposed Mandate Would Erode the Advertising Revenues that Support and Sustain Programming 43

D. The Proposed Mandate Would Undermine the Economics for the Creation of Guides 53

E. The Subversion of Licensing Agreements Would Be Particularly Destructive to Minority and Independent Programmers....54

F. The Proposed Mandate Would Eviscerate the Copyrights of MVPDs....58

G. A Government-Mandated Takeover of Licensed Content is Entirely Unnecessary When Content is Already Available Through Direct Licensing....59

H. The FCC's Proposed Robustness Rules Cannot Secure Copyright Protections in Today's Market....60

I. Netflix and other OVDs Use the Same App Model to Enable Compliance with their Program License Agreements....63

J. The FCC's Discriminatory Mandate Cannot Deliver on Its Key Promise of Search Across All Program Sources....66

V. THE PROPOSED MANDATE WOULD NOT DELIVER CONSUMERS' THEIR SUBSCRIPTION MVPD SERVICE....67

A. The Proposed Mandate Would Move Cable Service Backwards to One-Way....68

B. The NPRM Would Strip Out the Modern and Interactive Features of Today's Cable Service....72

VI. THE PROPOSED RULES WOULD DEPRIVE CABLE SUBSCRIBERS OF THE CONSUMER PROTECTIONS GUARANTEED BY LAW....75

A. The Proposed Mandate Would Gut Statutory Protections for Privacy and Children....75

1. The Proposed Certification Regime Would be Ineffectual....78

2. The NPRM Would Rely on Trust of Retail Device Manufacturers and App Developers Despite their Dismal Privacy Record....82

B. The Proposed Mandate Would Fail to Ensure Delivery of Emergency Alert Messages....85

C. The Proposed Mandate Would Impair Accessibility....87

VII. THE PROPOSED MANDATE WOULD UNDERCUT THE SECURITY THAT PROTECTS PROGRAMMING, NETWORKS, AND CONSUMERS....90

A. Loss of Security for the Channel Lineup....91

B. Loss of Data Security....93

C. Increased Supply Chain Risks....96

D. Lack of User Authentication Opens Service to Rampant Fraud....97

E. The Proposed Mandate Would Radically Constrain MVPD Choice (and Use) of Essential Security....98

F. Programming Keys Would be Exposed to Concentrated Attack 100

G. The Proposed Mandate Would Open Door to More Piracy and Malware 100

VIII. THE PROPOSED MANDATE WOULD REDUCE CHOICE, INNOVATION AND COMPETITION 106

A. Tech Mandates Chill Innovation in Rapidly-Evolving Technologies 106

B. The Proposed Mandate Would Remove the Innovative Features of Today's Cable Service 108

C. The Proposed Mandate Would Limit Future MVPD Service Offerings 109

D. The Proposed Mandate Would Limit Future Technology Innovations 111

E. The Proposed Mandate Would Isolate U.S. MVPDs from Global Development 111

F. The Proposed Mandate Would Limit Future Programming 113

G. The Proposed Mandate Would Undercut Network Management and Squander Bandwidth 113

H. CableCARD and Other FCC Mandates Have Been Expensive Failures that Restrained Innovation 114

IX. IT WOULD BE ARBITRARY TO STANDARDIZE ACROSS ALL MVPDS IN TWO YEARS OR DEFAULT TO A DEFICIENT GOOGLE SPECIFICATION 118

A. Delegation to Standards Bodies Does Not Relieve the Destructive Consequences of a Government-Imposed Technology Mandate 118

B. The NPRM Trivializes Important Technological Differences Between MVPD Networks 119

C. Two Years is An Impossibly Short Time for Creating a New Standard and Implementing It Across All MVPDs 123

D. Standardization Would Expose MVPDs to Increased Patent Litigation 126

E. It Would be Arbitrary to Default to the Google Proposal 127

X. THE PROPOSED MANDATE WOULD INCREASE CONSUMER COSTS 129

A. The NPRM Would Mandate More In-Home Set-Top Boxes 130

B. The Proposed Mandate Would Undermine Energy Efficiency 132

1. Energy Efficiency Under the Voluntary Agreement 132

2. The Proposed Set-Top Box Mandate Would Erase Energy Savings Achieved by the Voluntary Agreement 133

3. The Proposed Parity Rules Would Erect Barriers to Boxless Solutions 134

C. The Proposed Mandate Would Increase Network Costs 135

D. The Proposed Mandate Would Increase Consumer Costs 136

E. The Real Price of Set-Top Boxes Today 138

XI. THE PROPOSED PARITY RULES WOULD REPEAT THE COMMISSION'S PAST MISTAKES 141

XII. THE PROPOSED MANDATE WOULD PROMOTE THE PRIVATE INTERESTS OF A FEW INTERNET GIANTS, NOT CONSUMER INTERESTS 143

XIII. APPS ARE AN EFFECTIVE, WIDELY-ADOPTED, EXPANDING MEANS FOR PROVIDING MVPD SERVICE TO RETAIL DEVICES 148

XIV. AS THE COMMISSION HAS RECOGNIZED, *CARTERFONE* AND THE TELEPHONE NETWORK ARE NOT ANALOGOUS TO THE VIDEO DEVICE MARKETPLACE 155

XV. IMPOSITION OF THE PROPOSED MANDATE WOULD VIOLATE THE LAW AND EXCEED COMMISSION AUTHORITY 161

A. The Mandate Violates Section 629 and Title VI 161

B. The Mandate Violates the First Amendment 166

C. The Mandate Violates Copyright and Trademark Law 167

D. The Mandate Is Arbitrary and Capricious 168

XVI. THE PROPOSED BILLING "TRANSPARENCY" RULES WOULD RESULT IN HIGHER EQUIPMENT CHARGES TO CONSUMERS 169

XVII. THE FCC SHOULD NOT CREATE NEW REGULATORY IMBALANCES BY EXTENDING SECTION 629 RULES TO BROADBAND EQUIPMENT 172

XVIII. THE COMMISSION SHOULD CONTINUE TO RELY ON EXISTING REGULATIONS FOR CABLECARD SUPPORT 173

CONCLUSION 174

APPENDIX A – THE FCC'S "COMPETITIVE NAVIGATION" MANDATE: A LEGAL ANALYSIS OF STATUTORY AND CONSTITUTIONAL LIMITS ON FCC AUTHORITY
Theodore B. Olson, Helgi C. Walker, and Jack N. Goodman

APPENDIX B – A TECHNICAL ANALYSIS OF THE FCC'S NAVIGATION DEVICE PROPOSAL
Sidney Skjei

APPENDIX C – THE SCARY ECONOMICS OF THE NPRM'S NAVIGATION DEVICE RULES
Steven S. Wildman

APPENDIX D – Timeline of Cable Industry Support for CableCARDs

BEFORE THE
FEDERAL COMMUNICATIONS COMMISSION
WASHINGTON, D.C. 20554

In the Matter of	)	
	)	
Expanding Consumers' Video Navigation Choices	)	MB Docket No. 16-42
	)	
	)	
Commercial Availability of Navigation Devices	)	CS Docket No. 97-80

COMMENTS OF THE
NATIONAL CABLE & TELECOMMUNICATIONS ASSOCIATION

In vacating a far less extreme set of rules than the set-top box mandate proposed by the NPRM,[1] the D.C. Circuit warned the Commission against "unbridled" constructions of Section 629.[2] As the Court explained, the FCC's authority under Section 629 is neither "unbridled" nor "as capacious as the agency suggests."[3] The court dismissed as an "obvious implausibility" any claim that Section 629 "empower[s] the FCC to take any action it deems useful in its quest to make navigation devices commercially available."[4]

What Congress did do in Section 629 was to direct the FCC to assure the commercial availability of navigation devices that can receive multichannel services and other services "offered" and "provided" by multichannel video programming distributors (MVPDs). But the NPRM gives short shrift to the growing number of retail devices that present services "offered"

[1] Expanding Consumers' Video Navigation Choices; Commercial Availability of Navigation Devices, Notice of Proposed Rulemaking, MB Docket No. 16-42, 18 Fed. Reg. 14033 (Mar. 16, 2016) ("NPRM"); *Media Bureau Announces Comment and Reply Deadlines for Video Navigation Choices NPRM and Establishes Schedule for Ex Parte Meetings*, Public Notice, MB Docket No. 16-42 (Mar. 17, 2016) (extending comment deadline by seven days to April 22, 2016).

[2] *EchoStar Satellite L.L.C. v. FCC*, 704 F.3d 992, 997 (D.C. Cir. 2013) ("*EchoStar*").

[3] *Id.* at 997-98.

[4] *Id.* at 1000.

and "provided" by MVPDs. As demonstrated in the accompanying Legal White Paper authored by Theodore B. Olson, Helgi C. Walker and Jack N. Goodman, the NPRM runs afoul of the statutory and Constitutional limits on the FCC's authority.

In these Comments, supported by the Legal White Paper, a detailed Technical White Paper by Sidney Skjei, P.E., and an Economic White Paper by former FCC Chief Economist Dr. Steven S. Wildman the National Cable & Telecommunications Association ("NCTA")[5] recounts how consumers are benefitting from tremendous growth in the market for video services and are widely adopting multichannel and online video "apps" that make pay TV available on millions of retail devices. The NPRM proposes a new and deeply-flawed government set-top box mandate that jeopardizes the entire ecosystem that is producing a Golden Age of Television. Given the a record of costly FCC-mandated failures that delayed innovation, the Commission should recognize that there is no need for its headlong rush into more technology mandates in a vibrant and healthy marketplace where consumers can access multichannel and online video content on a wide and growing array of retail devices.

EXECUTIVE SUMMARY

Consumers have never had more choices of different providers, different packages, and different devices for video services. Consumers can receive cable, satellite, and telco TV programming on the most popular retail devices – including smartphones, tablets, smart TVs, streaming set-top boxes like Roku, game consoles, and other connected devices. MVPD apps are available on more retail devices than there are set-top boxes and keep expanding for even

[5] NCTA is the principal trade association for the U.S. cable industry, representing cable operators serving more than 80 percent of the nation's cable television households, more than 200 cable program networks, and others associated with the cable industry. The cable industry is the nation's largest provider of broadband service after investing over $245 billion since 1996 to build two-way interactive networks with fiber optic technology. Cable companies also provide state-of-the-art competitive voice service to approximately 30 million customers.

broader coverage. Year-over-year viewing via MVPD apps more than doubled in 2015, with forty percent of MVPD subscribers using "apps" to view their subscription content. Consumers can also build their own packages of video services from consumer electronics (CE) device manufacturers like Roku, Apple and Sony, from Internet streaming offerings by Sling TV, Netflix, Amazon, and many others, and from standalone offerings such as HBO Now and Showtime Anytime. A new study released this month found that there are now more of these connected TV devices in the United States than MVPD set-top boxes. The market is already creating new content discovery tools to help consumers choose from among all these sources. Apps have created a virtuous cycle: apps are good for developers who build more apps, good for device manufacturers who sell more devices, and good for consumers who get more innovation and a path away from set-top boxes. "Where we're headed," explains one cable CEO, "is the ability of customers to access the complete video product without having to rent a set-top box from us, whether they use a Roku or they use ultimately another IP-enabled device." That transition took another big step this week, when Comcast announced that it that will enable its customers to access their live and on demand programming and cloud DVR recordings in the home without a set-top box on Roku devices and Samsung Smart TVs.

Pointing to these successes, Roku's Founder and CEO Anthony Wood urged the FCC to "not bog down the revolution with an unnecessary government intervention in a dynamic marketplace." But rather than embracing and advancing this apps-based market, the FCC's set-top box mandate would jeopardize the entire ecosystem that is producing the world's best TV and offering more choice than the drafters of Section 629 could ever have imagined. Despite the Chairman's promises to protect the "sanctity of contract" and his claim "that which the cable operators put out should remain sacrosanct and untouched," the NPRM proposes that MVPD

service be disassembled into individual piece parts that any retail device manufacturer or app developer could selectively reassemble into a new derivative third-party service, without regard to the negotiated licensing agreements under which MVPD service is created and distributed in the first place.

Although similar licensing agreements underpin the competitive services of Netflix, Amazon, Apple and many other online video distributors (OVDs), the NPRM would make the regulatory and contractual obligations of MVPDs unenforceable on new retail devices. Under the FCC's proposed set-top box mandate, a third party device manufacturer could ignore the choices made by copyright owners for distribution, packaging, presentation, protection and funding of television content; block, replace or overlay advertisements; and delete a disfavored network or change its channel position or neighborhood to favor itself or a high bidder. This would undermine the economic model that sustains programmers, funds quality shows, and pays artists and entrepreneurs for their hard work in creating the programming we enjoy today. It would short-circuit the very market in which programming is now licensed directly, on negotiated terms, to new platforms.

The proposal would radically intervene in a successful market. Apps enable publishers to present and differentiate their retail services, *and* they propel retail devices' success. Tablet and smartphone manufacturers enjoy breathtaking sales and profit margins by competing with features, functions, networks, storage capacity, speed, look, feel and price, and may have their own distinctive top-level user interface, app store, and menu structure. These enormously successful retail devices cannot combine Uber and Lyft apps into a homogenized rideshare offering, or assimilate (Amazon's) Alpha House, (Netflix's) House of Cards, and the Sony PlayStation Vue content into a "unified" video offering, nor have they needed this ability to

achieve success. Each app is entered separately (as consumers enter individual retail stores), and the consumer can choose to browse or buy from any or all.

While the NPRM would bestow a windfall on those that seek to free ride by taking content without any license or compensation, consumers would lose:

- ***Higher Costs.*** This mandate would not help consumers cut the cord or lower costs: a cable subscription would still be required, and prices would go up as *all* subscribers bear the massive costs to invent new standards, clear new intellectual property rights, and develop, test and deploy new equipment. Cable set-top box rentals have historically been capped at cost by FCC rules. They are often free and typically rent for less than half the monthly TiVo subscription fee charged consumers even after they buy the TiVo device. But to add insult to injury, the FCC is considering banning MVPDs from the consumer-friendly practice of providing free or discounted devices, which would result in price increases for consumers.

- ***Less Service.*** Consumers would not be guaranteed to receive all of the service they subscribe to. The proposed rules would permanently roll back cable's modern interactive feature-rich services to one-way television and video-on-demand from the last century. The retail devices proposed in the NPRM would preclude consumers from ever receiving news headlines, weather information, sports scores, social networking, cable operator apps or search tools in their subscription. They would be permanently foreclosed from accessing their MVPD's features that allow customers to shop-by-remote, call up interactive information, switch between multiple events or camera angles, watch video-on-demand with full interactive "extras," upgrade service or order technical assistance from the screen, or start a show on one device and pick it up from pause on their tablets, smartphones, or smart TVs.

- ***More Boxes; More Energy.*** Instead of moving forward with apps, the FCC proposal would move subscribers backward into renting more in-home equipment from their MVPD – just to serve their retail devices – adding complexity and costs, and wiping out the energy efficiency savings of the Pay TV industry's Voluntary Agreement with energy efficiency advocates celebrated by the Department of Energy for its consumer and environmental benefits.

- ***Programming in Jeopardy.*** The proposed rules would not add any new programming that consumers cannot receive today, and would more than likely *reduce* available programming. By dismantling the technical, licensing and business agreements that fund great programming and fuel the video market, the mandate would erode the economic underpinnings of television production and distribution. It would especially jeopardize program diversity by disproportionately impacting minority and independent entrepreneurs and programmers and diverse audiences.

- ***More Ads, Less Consumer Protection.*** Under the NPRM's proposal, every device manufacturer and app developer would have the ability to capture details of individual consumers' television viewing data and then use or sell that data to insert personally-targeted ads to follow consumers and their children around the television and beyond, free of the restrictions on the use of consumer's private information that apply to MVPDs under the Communications Act. The proposal would also sacrifice the protections mandated by Congress for protecting children, for accessibility, and for delivering emergency alert messages.

- ***Weakened Security.*** The FCC proposal would open all networks to unparalleled attack and dismantle the security systems that protect the distribution of the highest value content, combat piracy and theft of service, and protect consumers against the malware that

steals their credit card information, passwords and other data and hijacks their devices into botnets that send spam and viruses.

- ***Constrained Innovation.*** The NPRM's proposal is not an additional option that can be layered onto current services. It would arrest the launch of boxless cloud-based services, prevent content providers from experimenting with new offerings, freeze MVPDs' competitive offerings, squander limited bandwidth, and frustrate the migration to new media formats, new content protection systems and other new technologies.

- ***Less Competition.*** Consumers have definitively demonstrated their preference for the apps that emerged from outside of the FCC's last technology mandate. Roku's app-based streaming boxes outsell CableCARD-enabled TiVos ten-to-one. Hundreds of millions of PCs are running apps, while sales of the CableCARD-enabled "OCUR" barely register. Despite a track record on video technology mandates that is littered with expensive failures, the Commission proposes a new mandate under which the government, not consumers, will decide whether and how MVPDs may keep up with rapid changes in technology and consumer tastes. Had the Commission adopted the similar AllVid proposal in 2010, consumers wouldn't now be benefiting from the explosion of cloud- and apps-based services. The FCC's set-top box mandate would forbid MVPDs – and MVPDs alone – from exercising the right to innovate and compete in the same way that Netflix, Google's YouTube, Amazon and other OVDs do. Only MVPDs, but not OVDs, would be unable to honor their content distribution agreements and protect content. Amazon, Google or Apple could put together a guide that combines their content with MVPDs, but MVPDs could not do the reverse without negotiating an agreement. Only MVPDs, but not OVDs, would lose agile development capabilities and be subjected to the fixed device protocols that historically slowed cable's innovation. And under the NPRM's

"parity" rules, MVPDs may not even be able to deploy apps at all. This is plainly not what Congress intended.

The NPRM's invitation for retail device and app providers to be able to monetize consumers' private viewing information and generate new advertising revenues from MVPD content, all without having to negotiate or pay for it, and without having to comply with consumer protection laws, has created "glee among tech companies," according to *Communications Daily*.[6] But Section 629 does not authorize this mandate or permit the Commission to cast aside other requirements of Title VI of the Communications Act, consumer privacy rules, copyright law, commercial content agreements, or MVPDs' Constitutional rights.

Analogies by proponents of the proposed rules that compare video networks to the traditional telephone network are misguided. The Commission previously concluded and detailed why *Carterfone* and the telephone network are not analogous to the video device marketplace. Cable operators are paying for, not profiteering from, set-top boxes, and have invested substantially in the "apps" that expand the reach of their service to more retail devices and still respect the extensive contractual, copyright and security requirements that come with distributing licensed commercial content.

The Commission has conducted no study of the cost of its proposal to consumers, programmers or network operators, and yet it assumes that whatever the cost, the proposal is worth it. Despite its claim that it is avoiding technical mandates and deferring to an open standards body, the NPRM rejects the apps-based approach that has been the choice of TV standards groups, Internet standards groups, CE device manufacturers, content providers, and

[6] Monty Tayloe, *Access to Consumer Data May Be Real Prize in Set-top Battle, Experts Say,* COMMUNICATIONS DAILY (Mar. 9, 2016), subscription service.

technologists worldwide. It would require video providers to re-architect their networks, overhaul their delivery infrastructure, invent and install new on-premises equipment, and be compliant within two years with undefined standards from undefined standards bodies.

There is no urgency for such reckless rulemaking. When cautioning that the NPRM's proposed rules "may not be the precise way forward," Commissioner Rosenworcel astutely observed that the "most successful regulatory efforts are simple ones." It is clear that the NPRM does *not* offer a simple solution. By contrast, apps already make MVPD service available to retail, and enjoy widespread support from consumers, CE manufacturers and industry leaders around the world – while preserving and promoting independent innovation in networks, services, and devices. Many of the leading companies in the industry have made clear that the future of TV lies in apps, with Roku's CEO warning that the FCC proposal would "hurt[] consumers," "raise costs and reduce innovation." Rather than racing headlong into another mistake, the Commission should hit the pause button and get it right this time.

I. THE MARKET HAS BEEN TRANSFORMED BY NEW AND EXPANDING MEANS FOR ENJOYING MULTICHANNEL SERVICE ON RETAIL DEVICES

A. Video Choices for Consumers Have Expanded Dramatically Beyond the Cable Set-Top Boxes Available in 1996

If the NPRM considers subscribers to be chained to their set-top boxes and in need of government mandates to have video choices today, it must be looking in the rear view mirror. Consumers today are not limited to buying video service from cable companies or leasing a 20th-century set-top box from the cable company to receive multichannel programming, as was the case two decades ago when Section 629 of the Communications Act was enacted.

Section 629 was adopted in quite a different world. In 1996, cable served over 90% of multichannel consumers,[7] and consumers had little choice but to lease a set-top box from cable to receive cable programming. The purpose of Section 629 was to give consumers the option to purchase a set-top box at Circuit City.[8]

Today, ninety-nine percent of homes have access to at least three MVPDs, thirty-five percent have access to four MVPDs, and consumers watch billions of hours of video provided by OVDs.[9] Consumers can purchase MVPD service not only from traditional cable operators, but also from AT&T/DIRECTV, DISH, or Verizon, now the first, third, and fourth largest MVPDs;[10] choose CE device manufacturers such as Apple and Sony that offer their own programming lineup, including many of the same program networks that are available from MVPDs;[11] choose standalone online offerings that allow them to buy content just from that programmer, such as HBO Now, CBS All Access, and Showtime Anytime; or they can buy online content from new video distributors. Nearly two-thirds of American households subscribe to at least one of

---

[7] *See Annual Assessment of the Status of Competition in the Market for the Delivery of Video Programming*, Second Annual Report, CS Docket No. 95-61, 11 FCC Rcd 2060, 2063 ¶ 5 (1995) ("[O]verall subscribership for all distributors using alternative technologies is just 9% of total multichannel video programming distributor ('MVPD') subscribership, whereas cable systems account for 91% of the total.").

[8] *See* Jeffrey Krauss, *Capital Currents – The New FCC 'Video Device' Inquiry*, CED MAGAZINE (May 31, 2010), http://www.cedmagazine.com/article/2010/05/capital-currents-new-fcc-video-device-inquiry (recounting that "Tom Bliley, then chair of the House Commerce Committee, was merely carrying out the wishes of his Richmond, Va., constituent – Circuit City" in pushing through the inclusion of Section 629 in the Telecommunications Act of 1996).

[9] *Annual Assessment of the Status of Competition in the Market for the Delivery of Video Programming*, Sixteenth Report, MB Docket No. 14-16, 30 FCC Rcd 3253 ¶ 31 Table 2 (2015) ("Sixteenth Video Competition Report").

[10] Downloadable Security Technology Advisory Committee (DSTAC) Final Report (Aug. 28, 2015), https://transition.fcc.gov/dstac/dstac-report-final-08282015.pdf ("DSTAC Final Report"). Over 130 million homes have access to at least three MVPDs, over 45 million have access to four MVPDs, and nearly all can access OVDs. Sixteenth Video Competition Report at ¶ 31.

[11] DSTAC Final Report at 34, 43-44, 299 (Working Group 2 Report ("DSTAC WG2") at 7, 16-17; Working Group 4 Report ("DSTAC WG4") at 164).

Netflix, Amazon Prime, or Hulu;[12] Netflix and Amazon Prime each have more video subscribers in the United States than any traditional MVPD;[13] and there are more OVD subscriptions to Netflix, Amazon, and Hulu alone than to all MVPDs combined. Competition and competitive distinctions among all these providers has fueled and funded innovation, network upgrades, broadband deployment, and consumer choice.

B. MVPD Apps Support More Retail Devices than Set-Top Boxes, and Keep Expanding

Far from being motivated to restrict retail devices, as hypothesized in the NPRM, cable operators and other MVPDs have invested substantial resources to make their apps available on more than 460 million customer-owned devices in the United States — with two-thirds of the retail devices supporting apps from all of the top 10 MVPDs.[14] MVPD apps are available on more than twice the number of set-top boxes currently in use, and new HTML5 apps are being launched for even broader coverage on any retail device using a modern browser.[15] Consumers have made it clear that they want to be able to obtain content from a variety of sources, and watch that content on the device of their choice. Thus, cable operators and other MVPDs are making their content available on third-party devices.

---

[12] Frank N. Magid Associates, *Connected TV Is the New Live TV Advertising* (Jan. 2016), http://www.broadcastingcable.com/sites/default/files/public/pdf/Magid%20TubeMogul%20Press%20Release%20FINAL.pdf (finding that 62% of American households subscribe to at least one of these three video services); DSTAC Final Report at 34, 48-49 (DSTAC WG2 at 7, 21-22).

[13] *See* Chris Isidore, *Amazon Prime Now Reaches Nearly Half of U.S. Households*, CNN MONEY (Jan. 26, 2016), http://money.cnn.com/2016/01/26/technology/amazon-prime-memberships/index.html (discussing report by analyst that estimates that approximately 54 million U.S. households have an Amazon Prime membership); Jeff Baumgartner, *Netflix Eclipses 75M Subs Worldwide*, MULTICHANNEL NEWS (Jan. 19, 2016), available at http://www.multichannel.com/news/content/netflix-eclipses-75m-subs-worldwide/396659 (noting that Netflix expanded its total number of U.S. subscribers to 44.74 million in the fourth quarter of 2015).

[14] *See* DSTAC Final Report at 208, 263 (DSTAC WG4 at Tables 8, 9).

[15] *See* DSTAC Final Report at 207-08 (DSTAC WG4 at 72-73); Comcast Comments, MB Docket 15-64 (Oct. 8, 2015) at 9 ("Comcast DSTAC Comments"). Comcast's launch of its new Xfinity Partner program this week is discussed at pages 3, 17.

The NPRM is profoundly incorrect in asserting that consumers are only using these retail devices to access MVPD programming in "certain limited exceptions."[16] On the contrary, the success of today's apps-based approach is extraordinary. As of mid-2015, there had been more than 56 million downloads of MVPD apps to iOS and Android devices alone, with millions more occurring every month.[17] Year-over-year viewing via MVPD apps more than doubled in 2015; with 40% of MVPD subscribers using "apps" to view their subscription content.[18] While most MVPD subscribers *also* use a leased set-top box today, they are avidly using retail devices in lieu of additional set-top boxes throughout the home. Today, Comcast is offering its Xfinity TV cable service on smartphones, tablets, PCs and Macs in most of the homes in its footprint. Roku's retail set-top boxes rely entirely on apps. Roku includes a Time Warner Cable (TWC) app with access to 300 linear channels, video-on-demand, and a TWC-supplied guide, and has expanded to include Charter's Spectrum TV app and Comcast's Xfinity app. Nearly two-thirds of U.S. TV homes now have at least one TV connected to the Internet via a Roku, Apple TV, Amazon Fire TV, or other streaming device, and a new study released in April 2016 found that *there are now more connected TV devices in the United States than MVPD set-top boxes*.[19] The

---

[16] NPRM at ¶ 14.

[17] DSTAC Final Report at 262 (DSTAC WG4 at 127).

[18] Forty percent of U.S. Pay TV subscribers used "apps" to view their subscription content in 2015 and year-over-year viewing via MVPD app increased 103% in 2015. Watching video content keeps rising on tablets (37.1% of users) and smartphones (40.3% of users), but use continues to shift from those devices to connected TV devices, which grew 31% year-over-year. Consumer views (video ad views) in authenticated (apps-based) ad-supported video programming content grew 142% year-over-year. Jeff Baumgartner, *TV Everywhere Continues Its Climb*, MULTICHANNEL NEWS (Feb. 25, 2016), http://www.multichannel.com/news/content/tv-everywhere-continues-its-climb/402839; Jeff Baumgartner; *TV Everywhere Usage Climbs: Study*, MULTICHANNEL NEWS (Mar. 25, 2016), http://www.multichannel.com/news/content/tv-everywhere-usage-climbs-study/403575; *Adobe Digital Index Q4 2015*, subscription service; *Digitalsmiths' Q4 2015 Video Trends Report: Consumer Behavior Across Pay-TV, VOD, PPV, OTT, Connected Devices, and Content Discovery*, subscription service; *FreeWheel, Video Monetization Report Q4 2015*, subscription service.

[19] Jeff Baumgartner, *Study: Connected TV Devices Eclipse Pay TV Set-Tops*, MULTICHANNEL NEWS (Apr. 22, 2016), http://www.multichannel.com/news/distribution/study-connected-tv-devices-eclipse-pay-tv-set-tops/404377.

Commission's claim that "99%" of consumers are required to use set-top boxes is a rhetorical artifice achieved only by ignoring the millions of other devices with which consumers receive their multichannel services.

While it may be true that apps and retail devices have not supplanted every consumer's use of set-top boxes *today*, the trend lines are crystal clear. The use of retail devices for accessing MVPD services grows dramatically with each passing day. In assessing the supposed need for new regulations that would not take effect for years, the Commission should be looking at evidence of where the market can be expected to be during the life of its regulations. It should not look back to a snapshot of the market when it set its sights on new rules in 2014, and certainly not to the market that existed in the 1990s, which appears to form the basis of the NPRM's proposal.

The apps-based approach keeps expanding to even more retail devices. For example, cable operators worked with consumer electronics companies, chipset manufacturers, content suppliers, and other MVPDs to develop the VidiPath solution through the Digital Living Network Alliance (DLNA). VidiPath is a new technology implemented in cable systems today that enables VidiPath-compatible consumer electronics devices to access MVPD service over the home network from an operator-supplied gateway device.[20] The cable industry has also worked in the World Wide Web Consortium (W3C) on HTML5 standards for streaming media, a common and open application-based framework that can be used to deliver IP video to CE devices and expand device options even further for consumers. Netflix and Apple already take advantage of these W3C HTML5 (EME) standards to distribute protected content, and Comcast

[20] *See* DSTAC Final Report at 41-42, 45, 213-30 (DSTAC WG2 at 14-15, 18; DSTAC WG4 at 78-95).

has just announced a new program that leverages the technology for making its service available to a broad range of retail devices.[21]

C. Programmers are Embracing New Distributors and Apps

Programmers and content providers are also embracing the new market, serving up their content with their own online apps and licensing their content and full cable channels to new apps-based platforms: CBS, HBO, major sports leagues, Netflix, Hulu, Amazon, Sony PlayStation Vue, and Sling TV are just the beginning. Since DSTAC was convened, Verizon AT&T/DIRECTV, and CenturyLink have announced new online services.[22] Apps from MVPDs and OVDs are presented side by side on consumers' devices. Third-party apps are also being incorporated into cable: Netflix, HBO Now, Hulu, YouTube, Pandora and Fandango have all been incorporated into various cable offerings.[23] Most recently, Cablevision launched a Hulu

---

[21] DSTAC Final Report at 230 (DSTAC WG4 at 95); *see* discussion of Comcast announcement at p. 17.

[22] *See, e.g.*, Emily Steel, *Verizon to Offer Free Mobile TV, With an Eye on Millennials*, N.Y. TIMES (Sept. 8, 2015), http://www.nytimes.com/2015/09/08/business/media/verizon-to-offer-free-mobile-tv-with-an-eye-on-millennials.html?_r=0; Thomas Gryta and Shalini Ramachandran, *AT&T to Sell DirecTV as an Online Service*, WALL ST. J. (Mar. 1, 2016), http://www.wsj.com/articles/at-t-to-sell-directv-as-an-online-service-1456861734; Daniel Frankel, *CenturyLink to Trial Video Streaming Service in Four Markets*, FIERCECABLE (Mar. 3, 2016), http://www.fiercecable.com/story/centurylink-trial-video-streaming-service-four-markets/2016-03-03.

[23] *See, e.g.*, Shalini Ramachandran, *Cablevision to Offer Hulu to Its Customers*, WALL. ST. J. (Apr. 28, 2015), http://www.wsj.com/articles/cablevision-to-offer-hulu-to-its-customers-1430243880?alg=y (Cablevision includes Hulu and HBO Now); *The X1 Platform*, XFINITY.COM, http://www.xfinity.com/x1 (X1 includes Facebook, Pandora, Xfinity Share, Instagram, Flickr Photos, and Watchable); Derek Walter, *Comcast Adds Fantasy Stats and Eye Candy to Its Xfinity X1 Sports App*, TECHHIVE (Aug. 27, 2015), http://www.techhive.com/article/2976538/entertainment/comcast-adds-fantasy-stats-and-eye-candy-to-its-xfinity-x1-sports-app.html; Jeff Baumgartner, *Comcast Spruces Up X1 Sports App for Football*, MULTICHANNEL NEWS (Sept. 3, 2015), http://www.multichannel.com/news/cable-operators/comcast-spruces-x1-sports-app-football/393475; *Learn More about Suddenlink HD/DVR Powered by TiVo*, SUDDENLINK.COM, http://help.suddenlink.com/television/Pages/TiVoPremiere.aspx (Suddenlink includes Netflix, YouTube, Pandora, and Fandango); *Mediacom Communications to Offer Hulu Streaming Service*, BUS. WIRE (May 5, 2015), http://www.businesswire.com/news/home/20150505005087/en/Mediacom-Communications-Offer-Hulu-Streaming-Service (Mediacom includes Hulu); ARRIS Comments, MB Docket No. 15-64 (Oct. 8, 2015) at 4 (discussing ARRIS Market, "an open platform for cable operators that combines over-the-top content with traditional pay TV programming"); Brian Fung, *Netflix to Become Real TV and Get Its Own 'Cable Channel' Next Week*, WASH. POST: THE SWITCH BLOG (Apr. 24, 2014), https://www.washingtonpost.com/news/the-switch/wp/2014/04/24/netflix-to-become-real-tv-and-get-its-own-cable-channel-next-week/ ("In order to make the deal possible, Netflix said it had to negotiate with some of its content partners to allow streaming on cable boxes."); Janko Roettgers, *Netflix Wants to*

channel on which Hulu subscribers can access Hulu's interactive guide and services by tuning to a Cablevision channel.[24]

These new video content sources services will continue to become easier and easier for consumers to access on their choice of screens and devices. As the *Wall Street Journal* puts it, "It is as easy to move back and forth among Netflix, Hulu, Amazon Prime and YouTube as it is to listen to music across Apple Music, Spotify and Pandora. … Apps for Netflix, Hulu and HBO Now sit next to iTunes on Apple TV."[25] Any device that hosts such apps – such as Roku or a Smart TV – offers its own remote control to enable easy choices. Contrary to the recent claim of INCOMPAS CEO Chip Pickering, consumers do not have to "switch remote controls every time" they want to watch streaming content on their TV.[26]

Even if a customer is not already accessing their content on a single device that presents both MVPD and OVD content (*i.e.*, a Roku box with a Charter or Time Warner Cable app, a TiVo leased by Mediacom that presents Netflix, or a Cablevision device presenting Hulu content), any consumer can purchase a universal remote that is capable of controlling both MVPD and third-party devices. For example, the popular Harmony universal remotes are capable of controlling Roku, TiVo, and Apple TV, as well as cable set-top boxes.[27] Samsung

---

Hook Up with Your Cable Company in 2015, GIGAOM (Dec. 10, 2014), https://gigaom.com/2014/12/10/netflix-wants-to-hook-up-with-your-cable-company-in-2015/.

[24] *See* Ashley Rodriguez, *Hulu Is Now Being Offered as a Cable TV Channel on Cablevision*, QUARTZ (Apr. 7, 2016), http://qz.com/657143/hulu-is-now-being-offered-as-a-cable-tv-channel-on-cablevision/.

[25] Miriam Gottfried, *Apple: Why It Hasn't Won the TV War*, WALL ST. J. (Jan. 25, 2016), http://www.wsj.com/articles/apple-why-it-hasnt-won-the-tv-war-1453739527.

[26] Press Release, INCOMPAS, White House Call to Unlock Set Top Box Will Speed Up Competition (Apr. 15, 2016), available at http://www.incompas.org/Files/filings/2016/4-15-16_White_House_Call_to_Unlock_Set_Top_Box.pdf ("Like the rest of us, President Obama must be tired of having to switch remote controls every time he watches House of Cards or other streaming content. New boxes from new companies will create a competition ecosphere that benefits consumers, innovators and content creators.").

[27] *See* Logitech, Harmony Remotes, http://www.logitech.com/en-us/universal-remotes (last visited Apr. 19, 2016).

recently revealed new "smart remotes" that automatically detect the HDMI port associated with each connected consumer device to enable seamless switching between different sources, using a single remote without even having to press the "input" button to switch HDMI ports.[28] There is no need for the FCC to dismantle the video ecosystem and MVPD networks when the market is already addressing remotes much more quickly and efficiently than could the Commission.

No one, including cable operators and other MVPDs, is advocating that leased set-top boxes are or should be the only way to receive video. Instead, programmers and MVPDs are moving in the same direction that the FCC claims it wants: more choice, more platforms, and more retail options. Consumers have never before had such an extraordinary variety of services, platforms, and devices on which to enjoy multichannel programming. Cable operators have been in the forefront of joining this new apps-based market and making their service available without a leased set-top box on millions of the same retail navigation devices consumers use to receive online video and thousands of other apps, delivering to consumers the benefits that Section 629 was intended to achieve.

D. Apps Provide a Path for Eliminating Set-Top Boxes

In this rapidly changing market, MVPDs are not trying to protect set-top boxes; they are trying to move away from them. Time Warner Cable CEO Rob Marcus explained, "Where we're headed is the ability of customers to access the complete video product without having to rent a set-top box from us, whether they use a Roku or they use ultimately another IP-enabled device."[29] In 2015, both Time Warner Cable and Charter launched new offerings that enable

---

[28] *See* Lance Whitney, *Samsung's New Smart TV Remote Wants to Control All Your Devices*, CNET (Jan. 4, 2016), http://www.cnet.com/news/samsung-touts-smart-tv-remote-that-can-control-all-your-devices/.

[29] Seeking Alpha, Time Warner Cable (TWC) Robert D. Marcus on Q3 2015 Results - Earnings Call Transcript (Oct. 29, 2015), http://seekingalpha.com/article/3620806-time-warner-cable-twc-robert-d-marcus-on-q3-2015-results-earnings-call-transcript.

customers in select markets to access multichannel video programming without any operator-supplied set-top box.[30] This week, Comcast announced partnerships with Roku and Samsung that will enable Comcast customers to access their live and on demand programming, including local broadcast, cable and premium networks, Public, Educational and Governmental (PEG) channels, and cloud DVR recordings in the home using only Roku Smart TVs and Roku streaming players, and certain models of Samsung Smart TVs without any leased Comcast set-top box.[31] Contrary to the assumption of the NPRM, these Comcast apps will "offer consumers viable substitutes to a full-featured, leased set-top box."[32] In order to further give its customers "the ability to watch what they want, when and where they want,"[33] it launched its Xfinity TV Partner Program using open standards adopted by the W3C to enable any CE manufacturer, at no charge and on standard terms, to similarly integrate the new Xfinity TV Partner app onto their devices without the need for customized integration.[34]

---

[30] Time Warner Cable, Finally Together. Live and Streaming, http://www.timewarnercable.com/en/enjoy/roku.html (last visited Apr. 21, 2016); Jeff Baumgartner, *TWC Launches Roku Trial in NYC*, MULTICHANNEL NEWS (Nov. 9, 2015), http://www.multichannel.com/news/content/twc-launches-roku-trial-nyc/395196; Charter, Spectrum TV App on Roku, http://www.charter.net/support/tv/spectrum-tv-app-roku/ (last visited Apr. 21, 2016); John Eggerton, *Charter Lineup Joins Roku*, MULTICHANNEL NEWS (Oct. 12, 2015), http://www.multichannel.com/news/video/charter-lineup-joins-roku/394487.

[31] Shalini Ramachandran, *Comcast Fires Back at FCC by Making TV Service Available Without a Set-Top Box*, WALL ST. J. (Apr. 20, 2016), http://www.wsj.com/articles/comcast-fires-back-at-fcc-by-making-tv-service-available-without-a-set-top-box-1461188283 (explaining that Comcast made "its full TV lineup available on Roku devices and Samsung smart TVs for the first time, without requiring customers to lease its proprietary box").

[32] NPRM at ¶ 16.

[33] Press Release, *Comcast and Roku Bring Xfinity TV Partner App to Roku TVs and Roku Streaming Players* (Apr. 20, 2016), available at http://www.businesswire.com/news/home/20160420006318/en/Comcast-Roku-Bring-Xfinity-TV-Partner-App.

[34] *See* Xfinity, The Xfinity TV Partner Program: Bringing the Xfinity Experience to More Consumer Devices and TV Screens, https://developer.xfinity.com/cableapp (last visited Apr. 21, 2016).

II. THE PROPOSED SET-TOP BOX MANDATE WOULD POSE GRAVE RISKS TO PROGRAMMING AND INNOVATION FOR LITTLE CONSUMER BENEFIT

A. The NPRM Would Disassemble MVPD Service

Media observers consider today's cornucopia to be the new Golden Age of Television in which consumers have unprecedented choices of different providers, different packages, and different devices, and an explosion of high quality programming choices.[35] The NPRM dismisses these market developments as non-competitive. It proposes that all MVPDs create and provide unbundled "information flows" of the programming they have created or licensed from programmers, instructions about their intended uses, and program guide details to all device manufacturers and applications developers. The NPRM is designed to let third-party tech companies and app developers extract the video from MVPD services to repackage, use and monetize in their own apps, products, services, and advertising without negotiating, paying for, or honoring the copyright and license rights of content owners or their distributors.

B. A Preview of Consequences: Higher Costs, More Boxes, More Ads; and Less Service, Programming, Security and Innovation

While the gains to free-riders under the FCC's proposed regime are clear, the proposed rules provide little consumer benefit and poses grave threats to the rich array of programming and innovation that consumers enjoy today.

- ***Higher Costs.*** The proposed rules would not help consumers cut the cord or lower costs. Every user of a retail set-top box would have to continue to subscribe to an MVPD,

[35] John Koblin, *Soul-Searching in TV Land Over the Challenges of a New Golden Age*, N.Y. TIMES (Aug. 30, 2015), http://www.nytimes.com/2015/08/31/business/fx-chief-ignites-soul-searching-about-the-boom-in-scripted-tv.html?_r=0 ("critics and viewers alike have hailed this as another golden age of television"); David Carr, *Barely Keeping Up in TV's New Golden Age*, N.Y. TIMES (Mar. 9, 2014), http://www.nytimes.com/2014/03/10/business/media/fenced-in-by-televisions-excess-of-excellence.html ("The addition of ancillary devices onto what had been a dumb box has made us the programming masters of our own universes. Including the cable box – with its video on demand and digital video recorder – and Apple TV, Chromecast, PlayStation, Roku, Wii and Xbox, that universe is constantly expanding. … All the new windows for content have created an in-migration of creative interest.").

and the costs for those services would inexorably go up as *all* subscribers bear the massive costs that would be imposed on MVPDs to invent new standards and specifications, clear new intellectual property rights, and develop, test, and deploy new equipment. Cable set-top box rental rates have historically been capped at cost by FCC rules, but the NPRM contemplates increasing consumer costs by banning MVPDs from providing free or discounted devices.

- ***Less Service.*** The NPRM would not even assure that users of retail devices or apps would receive all of the MVPD's services to which they subscribe. The mandate would permanently roll back cable's modern interactive feature-rich services to one-way television and video on demand from the last century. The retail devices proposed in the NPRM would preclude consumers from using news headlines, weather information, sports scores, social networking, cable operator apps and content discovery tools. Customers would be permanently foreclosed from accessing their MVPD's features that allow customers to shop-by-remote, call up interactive telescoped information, switch between multiple sports games or events or camera angles, watch video-on demand with full interactive extras, upgrade service or order technical assistance from the screen, "start over" when they tune in mid-program, start watching a show on one device and pick it up from pause on their tablets, smartphones, or smart TVs, see caller-ID information on their television, or tune back to the recent channels they had watched on any of the devices already supported by cable apps.

- ***More Boxes; More Energy.*** The proposed mandate would effectively compel subscribers to move backward into renting more in-home equipment – a new device just to serve their retail devices – instead of moving forward with apps. The "parity" requirement would also preclude MVPDs from offering boxless solutions. These unnecessary increases in the number of deployed set-top boxes would wipe out the energy efficiency savings of the MVPD's Voluntary

Agreement struck by the Pay-TV industry with energy efficiency advocates that was celebrated by the Department of Energy for its consumer and environmental benefits.

- ***Programming in Jeopardy.*** The proposed mandate would add no new programming that consumers cannot already receive today. MVPDs would be converted into suppliers of unbundled copyrighted content and data flows released to third parties for free under an FCC-invented zero-cost compulsory copyright license. By dismantling the licensing structure, business agreements, license fees and advertising revenues that fund great programming and fuel this video market, the mandate would erode the economic underpinnings of television production and distribution. And by stripping copyright owners of their statutory rights to decide whether, how and on what platforms to disseminate their content, the mandate would make it harder for programmers to connect with their desired audiences. Independent and diverse programmers could be moved away from their negotiated channel lineups and neighborhoods down to the bottom of the search algorithm.

- ***More Ads; Less Consumer Protection.*** The NPRM would undermine consumer protections built into cable and satellite service and apps, rendering unenforceable the protections mandated by Congress for protecting consumer privacy, protecting children, assuring accessibility, and delivering emergency alert messages. Unbundling video and data means allowing every device manufacturer and app developer to capture the most intimate of private television viewing records and then add even more advertising and more startlingly personal ads to follow consumers around the television and beyond.

- ***Weakened Security.*** The NPRM would dismantle the security system that protects the distribution of high-value content and combats piracy. It would also dismantle the technical, testing, licensing and business arrangements that protect consumers against the

malware that steals consumers' credit card information, passwords and other data and hijacks their devices into botnets to send spam and viruses and participate in denial-of-service attacks.

- ***Constrained Innovation.*** The FCC mandate is not an additional option that can be layered onto current services. Instead, the proposal would prevent MVPDs from innovating in their existing distribution networks and apps that operate today. It would arrest the launch of cloud-based services, prevent content providers from experimenting with new offerings, freeze MVPDs' competitive offerings, squander limited bandwidth, and frustrate the migration to new media formats, higher resolutions, new content protection systems and other new technologies. The NPRM gives no reasoned explanation for rejecting retail devices that display MVPD apps. These apps use the same technology used by Netflix, Hulu, and Amazon, and are written to the requirements of the platform owner. Apps power today's market because they allow independent innovation by networks, service providers, and retail devices.[36] The proposed rules would stop consumers from choosing how they receive video, and constrain them with a new government mandate, a mandatory in-home box, and artificial restraints on the ability of MVPDs to keep up with rapid changes in technology and consumer tastes.

- ***Less Competition.*** The FCC's set-top box mandate would adopt a discriminatory approach that applies only to MVPDs, undermining today's app-based market that provides a more level playing field for MVPDs and OVDs. Today, all such content distributors harness the same simple market-based technology tools to serve consumers' retail devices. All use their own applications, their own application-based user-interfaces, and their own negotiated business-to-business agreements to present their video services and to honor applicable licenses with their

[36] The NPRM is mistaken in claiming that retail devices need MVPD permission to provide Pay TV apps. *See* NPRM at ¶ 16. No PC or browser sought MVPD permission to provide Pay TV apps. Apple and Android devices do not negotiate with the MVPD to include Pay TV apps. Without negotiation, the retail device can receive MVPD programming and even control recordings to an MVPD's cloud DVR via the MVPD app.

content providers. The Roku streaming box, HTML5, smartphones, and smart TVs are all apps-based. By carving MVPDs – and only MVPDs – out of this dynamic market, the proposal would make it impossible for the FCC to fulfill its professed goal of letting consumers search across and discover all content. Netflix, Hulu, Amazon and other online content providers' apps would remain under their own exclusive control, available for search only on the terms they offer or negotiate.

Section 629 is directed to the commercial availability of retail devices that consumer may use to receive their multichannel subscription services. It does not authorize the Commission to dismantle MVPD services and the multichannel market or to undermine programming, security, innovation, and consumer interests as would the NPRM.

III. THE NPRM IS DIVORCED FROM MARKET REALITIES

DSTAC reached a remarkable but unspoken consensus agreement: all members recognized that the video market has changed fundamentally and the video choices for consumers have expanded dramatically. Consumers today are not limited to receiving multichannel programming from cable companies or the cable set-top box, as was the case when Section 629 was enacted.[37] Consumers can obtain content from many sources, such as satellite and telco MVPDs, and watch it through many types of devices and platforms, such as device-specific platforms like iOS, Android, smart TVs, Xbox, PlayStation, and Roku; W3C HTML5 web apps; DLNA VidiPath; RVU; the Virtual Joey; and Sling TV.[38] Cable operators have been in the forefront of joining the new apps-based market, enabling subscribers to receive cable

[37] *See* DSTAC Final Report at 2, 299 (DSTAC Summary at 2; DSTAC WG4 at 164).

[38] DSTAC Final Report at 4-5, 263, 265, 270, 273, 274, 275 (DSTAC Summary at 4-5; DSTAC WG4 at 128, 130, 135, 138, 139, 140).

service on the same devices they use to receive online video and thousands of other apps. But the NPRM dismisses today's market revolution.

A. The FCC Has Artificially Defined Its Own Market Failure

The FCC's proposed radical intervention in the market is premised on a remarkably dismissive approach to the millions of consumer-owned tablets, smartphones, set-top boxes, PCs, game consoles, and Smart TVs that have been transformed by MVPD apps into navigation devices for consumers to watch, navigate and manage recordings of their MVPD programming. According to the FCC's own *Video Competition* report, the presence of Netflix, Hulu, and Amazon apps on a variety of retail devices represents good video competition.[39] But according to the NPRM, if a consumer downloads an MVPD app for free to that same device, the customer's own device becomes "ancillary" to MVPD service[40] and no longer counts as a navigation device that contributes to a retail market. According to the NPRM, any MVPD apps that consumers download to their own devices is evidence of market failure, because the apps are "proprietary" – that is, they present each MVPD's service as offered and provided by the MVPD (which, notwithstanding the NPRM's position, is the stated statutory objective of Section 629). The NPRM questions whether this can even be the kind of competition envisioned by Section 629, even though it is getting MVPD service as "offered" and "provided" by the MVPD onto retail devices without any charge for equipment. If an MVPD agrees to work with a retail manufacturer to make video services run even better on that device and the retail device flourishes – as is the case today with Roku and certain Smart TVs – the NPRM would treat that device as "affiliated" with the MVPD and it no longer counts as a retail device, even if the

[39] Sixteenth Video Competition Report at ¶¶ 3, 9-10, 290, 301, 333.

[40] NPRM at ¶ 49.

customer purchased it at retail.[41] This is a self-fulfilling prophecy of market failure, grasping defeat from the jaws of the most competitive market that consumers have ever enjoyed.

B. Consumers Have Spoken: Apps, Not Replacement Guides, Are Driving Retail Device Success

The entire NPRM is based on one precarious assumption: that market success cannot be achieved unless all retail devices and third-party apps can receive and re-purpose parts of MVPD programming without any distribution license or contract, remove large parts of MVPD service, and add their own features, content, and user interface.[42] But there are three fatal cracks in the foundation of this assumption.

First, the DSTAC Report found that "no evidence whatsoever has been presented to the DSTAC to indicate that [a retail device's own] guide is the recipe for success of competitive navigation devices, or that customers want the device maker to block available MVPD services."[43] Nothing in Section 629 requires MVPDs to facilitate the ability of a retail device to replace an MVPD's integrated guide with its own guide, rather than make available the service that is "offered" and "provided by" the MVPD.

Second, in a transparent attempt to manufacture that evidence, the Commission argues that retail devices "must be able to differentiate themselves" through their own user interfaces and "complementary services" because the "few successful CableCARD devices" that succeeded

---

[41] The Commission's proposal to redefine "affiliation" to mean any business relationship at all would be a radical departure for which it offers no reasoned basis. The FCC's existing Section 629 regulations define "affiliate" as "[a] person or entity that (directly or indirectly) owns or controls, is owned or controlled by, or is under common ownership or control with, another person, as defined in the notes accompanying § 76.501." 47 C.F.R. § 76.1200(d). None of the criteria set forth in the existing rules create an attributable interest based solely on the existence of a business relationship, or an agreement, with an MVPD.

[42] *See* NPRM at ¶¶ 12, 17, 35 n.95, 40.

[43] DSTAC Final Report at 283 (DSTAC WG4 at 148).

had their own guide.[44] This is absurd. All CableCARD devices had their own guide by necessity until interactive apps were developed, and most of them failed.[45] All "successful" CableCARD devices also have a PCMCIA card, so by the NPRM's logic the only path to success is for all future devices to rely on the PCMCIA card that has been eclipsed in the market.

Third, consumers have demonstrated definitively that the retail devices they actually enjoy are the app-based products that have emerged from outside of the FCC's scheme of technology mandates:

- Consumers have purchased fewer than a million retail TiVos with TiVo's guide – but they have purchased ten million Roku streaming boxes that are entirely app-based and present the MVPD's full app and user interface with a click.[46]
- Consumers have downloaded MVPD apps to more than 56 million Android and iOS devices alone, and also to smart TVs and many other devices, for the same experience.
- Hundreds of millions of PCs are running apps – but sales barely register for CableCARD-enabled "OpenCable Unidirectional Receivers" ("OCURs") that feed linear cable channels into Windows Media Center. In 2015, Microsoft abandoned Windows Media Center.

The NPRM's supposed recipe for success is exactly the opposite of the success that is actually occurring in the marketplace: an apps-based approach that has produced such vigorous competition and choice among MVPDs, OVDs, *a la carte* OTT offerings, and the explosion of programming that has grown to serve them.

---

[44] NPRM at ¶ 27.

[45] Out of 38 original UDCP licensees, only TiVo remains, and its retail market share continues to decline as consumers adopt other devices. *See* Don Reisinger, *Can TiVo Make a Comeback?*, FORTUNE (Oct. 25, 2015), http://fortune.com/2015/10/25/tivo/ ("Over the last few years, the company has been hemorrhaging subscribers, losing 'a couple hundred thousand' TiVo-owned subscribers [paying customers the company acquired on its own] in the last few years, CFO Naveen Chopra says.") *See also* discussion of CableCARD support and transition to two-way at *infra* n.271 and pp. 60-62.

[46] Roku, *Roku Sets New TV Streaming Milestones* (Sept. 16, 2014), https://blog.roku.com/blog/2014/09/16/10-million-roku-players-sold (indicating sale of 10 million Roku devices in the United States).

C. Apps Do Not Commoditize Retail Devices – They Enrich Them

The NPRM suggests concern that MVPD apps will commoditize retail devices, but the market demonstrates exactly the opposite. Apps enrich retail devices and propel their success, rather than commoditizing them. Google launched its Android apps platform as a "virtuous cycle": "a strategy that is good for developers (they sell more apps), good for device manufacturers (they sell more devices) and good for consumers (they get more features and innovation)."[47] Apps have become essential for device success: Blackberry was near death until it moved to the Android app platform.[48] Apps have grown to define content and service delivery.

In 2014, apps overtook PC-based web access to online content and services, and have become the new development priority for service providers. Apple has said that "the future of TV is apps,"[49] and Netflix has reiterated to investors its "main message for several years that what is known as channels is going to become apps, and that all of these providers [like Verizon and Comcast] need to have great apps, on a phone, on a tablet, on a TV."[50] Netflix's CEO Reed Hastings, in explaining why the company had no interest in supporting the NPRM's proposal to

---

[47] Andy Rubin, *The Benefits & Importance of Compatibility*, ANDROID OFFICIAL BLOG (Sept. 14, 2012), http://officialandroid.blogspot.com/2012/09/the-benefits-importance-of-compatibility.html.

[48] *See* Matthew Lynley, *BlackBerry 10 Needs These Apps to Keep Up With the Competition*, WALL ST. J.: DIGITS BLOG (Jan. 28, 2013), http://blogs.wsj.com/digits/2013/01/28/blackberry-10-needs-these-apps-to-keep-up-with-the-competition/; Will Connors, *RIM Courts App Developers*, WALL ST. J. (Sept. 26, 2012), http://www.wsj.com/articles/SB10000872396390443507204578020631307533120; Ian Morris, *Google's Android Is Going To Save BlackBerry With A Little Help From Amazon*, FORBES.COM (July 8, 2014), http://www.forbes.com/sites/ianmorris/2014/07/08/googles-android-is-going-to-save-blackberry-with-a-little-help-from-amazon.

[49] Cat Zakrzewski, *Apple's Tim Cook: "We Believe the Future of TV Is Apps,"* WALL ST. J. (Sept. 9, 2015), http://blogs.wsj.com/personal-technology/2015/09/09/apples-tim-cook-we-believe-the-future-of-tv-is-apps/.

[50] NFLX - Q3 2015 Netflix Inc. Earnings Call, Edited Transcript, THOMSON REUTERS STREETEVENTS (Oct. 14, 2015) at 13, http://files.shareholder.com/downloads/NFLX/885271892x0x854762/D30DDE2E-49D9-4C3C-898C-6D8C9402F872/NFLX-Transcript-2015-10-14T21_00.pdf.

"unlock the box," stated that "the open set top is the Roku or the Apple TV or the smart TV. It's a basic Internet device that runs apps and that's what we think the future is."[51]

Retail devices that host apps continue to differentiate themselves with features, functions, networks, drives, speed, look, feel and price, and may have their own top-level user interface, app store, and menu structure. For example, Roku currently offers more than 2500 "channels," with each video provider's apps including that provider's user interface, yet Roku also offers its own distinctive top-level interface and features such as upscaling content to 4K, voice command remote controls, a remote-finder button on the box that activates a sound on the remote, cross-app search, and "Roku Feed" that allows a user to select a future release and be notified when it is available for viewing from any of the customer's subscriptions. Apple tablets and smart phones present MVPDs' iOS apps with the MVPD user interface intact, yet Apple's distinctive devices command enviable volumes and profit margins.[52] Competitive Android devices also sell in volumes that dwarf leased set-top boxes.[53] TiVo provides its users access to dozens of apps,

---

[51] Kate Tummarello & Alex Byers, *Apple vs. Law Enforcement: Round Two*, POLITICO MORNING TECH (Apr. 19, 2016), http://www.politico.com/tipsheets/morning-tech/2016/04/morning-tech-apple-vs-law-enforcement-round-two-thune-wants-fcc-leak-investigation-e-c-panel-set-for-lifeline-fight-213838.

[52] Apple recorded the largest quarterly profit in world history at $18.4 billion in the final quarter of 2015, selling nearly 75 million iPhones and 16 million iPads. *Apple, Inc., SEC Quarterly Report Pursuant to Section 13 or 15(d) of the Securities Exchange Act of 1934* (Form 10-Q) (for the quarterly period ended December 26, 2015), https://www.sec.gov/Archives/edgar/data/320193/000119312516439878/d66145d10q.htm. The Apple iPhone 6S Plus sells for $749 on a $236 bill of materials to manufacture. Dawn Chmielewski, *Apple's iPhone 6s Plus Costs an Estimated $236 to Make — $749 to Purchase*, RE/CODE (Sept. 29, 2015), http://recode.net/2015/09/29/apples-iphone-6s-plus-costs-an-estimated-236-to-make-749-to-purchase/.

[53] Samsung, for example, sold 85 million smartphones and 9 million tablets over the same period. *See* Emil Protalinski, *IDC: Samsung Shipped More Smartphones than Apple in 2015, But the Gap is Narrowing*, VENTUREBEAT (Jan. 27, 2016), http://venturebeat.com/2016/01/27/idc-samsung-shipped-more-smartphones-than-apple-in-2015-but-the-gap-is-shrinking/ (citing IDC figures showing 85.6M Samsung smartphone units shipped in the fourth quarter of 2015); *Samsung's Global Tablet Shipments from First Quarter 2012 to Fourth Quarter 2015 (in Million Units)*, STATISTA, THE STATISTICS PORTAL (last visited Mar. 23, 2016), http://www.statista.com/statistics/299618/tablet-shipments-samsung/ (reporting 9 million Samsung tablet units shipped in the fourth quarter of 2015).

and once selected the menus and display are established by each app's interface, rather than the TiVo menu.[54]

These retail devices present apps as written by their publisher with each publisher's own content, service, brand, look and feel. The device manufacturers are not permitted to take the apps apart and reassemble (Amazon's) Alpha House, (Netflix's) House of Cards, and the Sony PlayStation Vue TV line up into a "unified" offering any more than they may unbundle Uber and Lyft and create a new homogenized rideshare offering from your smartphone manufacturer, nor have they needed this ability to achieve success. The proponents of the proposed set-top box mandate are clearly wrong in claiming as essential the ability to present *all content* using only their own replacement interface.

The most modern standards developed by W3C for streaming media follow the same approach. Media streaming through an HTML5 browser presents each publisher's content through a web page designed and tailored to the content by the publisher.[55] Smart TVs follow the same model. Google's Android TV markets itself as an app platform for smart TV manufacturers, promising to "make sure that the content they provide to the user is displayed exactly as they broadcast it," and enabling app developers "to completely control the

---

[54] TiVo preloads apps from Netflix, HBO Go, Hulu, Amazon, YouTube, MLB.TV, Vudu, Home Shopping Network, AOL On, Toon Goggles, Web Video Hotlist, WWE, and Yahoo, and it also provides access to the Opera TV apps store which allows its users to download a wide variety of third-party apps. *See* https://www.tivo.com/support/how-to/explore-opera-tv-store. Even under TiVo's negotiated agreement with Netflix, Netflix programming is presented through the Netflix interface. *See also* fccdotgovvideo, DSTAC Post-Meeting DIRECTV and TiVo Demonstrations, available at https://www.youtube.com/watch?v=Ax9Gu0mugbg (published Jun. 15, 2015) (video of DIRECTV and TiVo Demonstrations presented after the Downloadable Security Technology Advisory Committee Meeting held at FCC headquarters in Washington, DC on May 13, 2015).

[55] DSTAC Final Report at 81-91, 230-34 (Working Group 3 Report ("DSTAC WG3") at 23-33; DSTAC WG4 at 95-99).

experience."[56] This approach has been adopted by worldwide TV standards groups, standards groups in the US, Europe, Japan and Korea, and smart TVs and other CE devices as a platform for TV applications.[57]

Further endorsement of this approach was evident at the 2016 Consumer Electronics Show, at which the Consumer Technology Association (formerly CEA), device manufacturers, distributors, content providers and security companies from across the worldwide video ecosystem launched the Web Application Video Ecosystem (WAVE). WAVE is using HTML5 with streaming media standards to assure "a playback environment that is consistent, reliable, and high performance, on TVs, phones, tablets, media players, gaming systems, laptops"[58] – just as proposed in the apps-based approach that was thoroughly reported in DSTAC but scarcely mentioned in the NPRM. The technology and ecosystem is built on all the apps offered by MVPDs, OVDs, and other service providers and content publishers.

D. Consumers, Standards Bodies, Device Manufacturers and Technologists Worldwide Refute the FCC's Approach

The NPRM's definitions for market success and failure, for what devices should "count" or should not, are against all evidence. Despite its claim of avoiding technical mandates and deferring to an open standards body, the NPRM rejects the apps-based approach that is already

---

[56] DSTAC Final Report at 276 (DSTAC WG4 at 141) (quoting Thomas Campbell, *Google: "Google TV has evolved into Android TV,"* IP&TV NEWS (Apr. 21, 2015), http://www.iptv-news.com/2015/04/google-google-tv-has-evolved-into-android-tv/).

[57] TV standards groups in US and worldwide that have adopted HTML5 apps include W3C (Worldwide); ATSC 3.0 and DLNA VidiPath (US); HbbTV (Hybrid Broadcast Broadband TV) 2.0 (Europe); MSIP Smart TV 2.0 (Korea); and IPTV Forum Japan Hybridcast (Japan). Smart TV platforms that support HTML5 as a platform for TV applications include: Android TV (Sony), Tizen (Samsung), Firefox OS (Panasonic), and webOS (LG). Numerous smart TVs, as well as TiVo, also provide users with access to the Opera TV app store.

[58] Troy Dreir, *CES '16: The GIVE Project Aims to Push HTML5 Video Forward*, STREAMING MEDIA (Jan. 7, 2016), http://www.streamingmedia.com/Articles/Editorial/Featured-Articles/CES-16-The-GIVE-Project-Aims-to-Push-HTML5-Video-Forward-108444.aspx. WAVE, formerly known as the Global Internet Video Ecosystem or GIVE, is spearheaded by the CTA. The steering committee includes Adobe, Akamai, LG, Samsung, Sky-UK, Sony, Starz, and WWE. The panel announcing GIVE included representatives of Adobe, Akamai, Comcast, Sony, Microsoft, MLB Advanced Media, Samsung, and Starz.

the choice of worldwide TV standards groups, Internet standards, CE device manufacturers, and technologists worldwide for the most successful device platforms. The NPRM then directs a standards body to expeditiously create an unproven counter-market standard, even though DSTAC could not reach anything close to a consensus in seven months of intensive deliberations.

Despite that mountain of evidence, the NPRM assumes that consensus can be reached promptly on an unproven set-top box technology mandate, and that a government mandate is superior to market-driven apps-based approaches that are already flourishing in the marketplace.

These arbitrary choices do not assure competition under Section 629. They instead would ordain very specific losers and winners. Under the FCC's formulation, MVPDs would be transformed from distinctive retail competitors into common carrier wholesalers of high-value content and metadata provided to third parties for free. Tech companies are reportedly and understandably *gleeful* that they alone would no longer need to bother with negotiating, licensing or paying for content, nor with obeying the privacy, copyright, regulatory and other obligations that are supposed to define a cable service.[59] But none of this upheaval is necessary to secure the benefits of competition for consumers. The global market has coalesced around standards for app delivery of video that is delivering unprecedented choice for consumers. Pointing to these successes and the fertile framework for successes ahead, the Founder and CEO of Roku, one of the world's most successful competitive navigation device providers, this week urged the FCC, "Let's not bog down the revolution with an unnecessary government intervention in a dynamic marketplace."[60] His call should not go unheeded by the Commission.

---

[59] *See* Tayloe, *supra* note 6 (Mar. 9, 2016).

[60] Anthony Wood, *How the FCC's 'Set-Top Box' Rule Hurts Consumers*, WALL ST. J. (Apr. 22, 2016), http://www.wsj.com/articles/how-the-fccs-set-top-box-rule-hurts-consumers-1461279906.

IV. THE PROPOSED MANDATE WOULD UNDERMINE THE COPYRIGHT AND LICENSING PROTECTIONS THAT ARE NECESSARY TO SUSTAIN HIGH-QUALITY PROGRAMMING

Those who characterize opposition to the NPRM as a campaign by MVPDs to protect set-top box rentals must face an inconvenient truth: among the strongest objections to the core proposals of the NPRM are those of content owners, particularly independent and minority program owners and civic groups, who have no stake in set-top box revenue. What these content creators do have at stake is the preservation of a video distribution ecosystem that respects and protects their exclusive rights to determine whether, how and on what platforms to disseminate their content, the ways in which they choose to connect with their audiences, and the licensing and advertising revenues with which they fund billions of dollars in high-quality programming. The proposed regulations would destroy that ecosystem by eviscerating the ability of MVPDs to guarantee performance under the copyright, programming, and retransmission consent licensing agreements that content owners depend upon to manage the presentation of their content.

The stakes are high in preserving a vibrant content distribution system. The average production cost of a major motion picture is $100 million and many television shows cost millions of dollars *per episode* to produce.[61] Film and television content supports 1.9 million direct and indirect jobs. The entertainment industry is now one of the largest sectors of the American economy, and one of our strongest on the global stage with an annual trade surplus of $16 billion.[62]

---

[61] MPAA Comments, MB Docket No. 15-64 (Oct. 8, 2015) at 7.

[62] *See* Sen. Chris Dodd, *Creative Industries Add $698 Billion to the U.S. Economy and 4.7 Million Jobs*, MPAA POLICY FOCUS BLOG (Jan. 14, 2015), http://www.mpaa.org/nea/ (discussing report by the Bureau of Economic Analysis (BEA) and the National Endowment for the Arts (NEA) on the economic impact of the creative industries).

The NPRM's threat to the economic foundation for the production and distribution of programming spurred the creation of the Future of TV Coalition, a broad and diverse movement of 69 (and growing) organizations representing leading small, large, and diverse content owners, including broadcasters, cable networks, and movie studios; small and large video distributors from all technology platforms; diversity advocates and civil rights organizations; and technology companies. The Coalition's members are:

American Cable Association (ACA)
Armstrong Cable Services
ARRIS Group Inc.
ASPIRA
AT&T/DIRECTV
Atlantic Broadband
Blue Ridge Communications
Bright House Networks
Buckeye CableSystem
Cable One
Cablevision Systems Corporation
CenturyLink
Charter Communications
Cincinnati Bell
Cisco Systems Inc.
Comcast Corporation
Condista Networks
Consolidated Communications
Cox Communications
Crossings TV
Cuban American National Council
Dialogue on Diversity
DISH Network
Eagle Communications, Inc.
EchoStar Technologies
Feel Good TV
Freemind Beauty Productions
Frontier Communications
General Communications Inc.
Hargray Cable
Hispanic Leadership Fund
Hispanic Technology & Telecommunications Partnership
ITTA - The Voice of Mid-Size Communications Companies
League of United Latin American Citizens
LGBT Tech Partnership
MANA
MCTV
Mediacom Communications
MetroCast Communications
Midcontinent Communications
Minority Business RoundTable (MBRT)
Motion Picture Association of America (MPAA)
National Black Caucus of State Legislators (NBCSL)
National Black Chamber of Commerce
National Cable & Telecommunications Association (NCTA)
National Congress of Black Women (NCBW)
National Hispanic Foundation for the Arts
National Organization of Black County Officials (NOBCO)
National Organization of Black Elected Legislative (NOBEL) Women
National Puerto Rican Coalition
NBCUniversal
NTCA – The Rural Broadband Association
Ovation TV
Pico Digital
Revolt
SER-Jobs for Progress National
Service Electric Cablevision
Sjoberg's Inc.
Suddenlink Communications
TDS
TechLatino: Latinos in Information Sciences and Technology Association
Time Warner Cable
TVOne
United States Hispanic Chamber of Commerce
United States Hispanic Leadership Institute
United States Telecom Association
Vme TV and Vme Kids
Vyve Broadband
WOW!

The Coalition and its positions have also attracted widespread support from more than 60 members of Congress, and additional content owners and diversity organizations. On the date of this filing, a joint statement was released by an extraordinarily broad and diverse group of creative industry companies, advocacy groups, labor unions, associations, programmers, and individual creators "raising concerns about the Federal Communications Commission's proposal to regulate the set top box market – and its potential impact on copyright and content creators' ability to be compensated for their work."[63] This group includes the American Federation of Musicians, the Copyright Alliance, CreativeFuture, Crossings TV, Directors Guild of America, IATSE, the Independent Film and Television Alliance (IFTA), Motion Picture Association of America (MPAA), the National Music Publishers' Association (NMPA), the Recording Industry Association of America (RIAA), SAG-AFTRA, SoundExchange, and Vme TV.

A. The Proposed Mandate Would Undermine the Intellectual Property Foundation and License Agreements that Sustain Today's Golden Age of Television

The modern TV ecosystem is built on licensing agreements that programmers and creators negotiate with the companies that distribute their work. These contracts establish clear, enforceable terms for distribution limits, acceptable advertising, restrictions against overlays, channel location, the display, placement, branding and security of content, and the compensation and advertising revenues that fund the creative work, production, program acquisition and operations that drive the video market. A&E Television Networks, AMC Networks, Discovery Communications, NBC Universal, Scripps Networks, Time Warner Inc., The Walt Disney Company, ESPN, 21st Century Fox, Viacom, NCTA and MPAA have all explained the critical

[63] Press Release, Members of the Creative Community Sound the Alarm about FCC Proposal's Potentially Harmful Impact on Content Creators (Apr. 22, 2016), available at http://www.mpaa.org/wp-content/uploads/2016/04/Joint-Creative-Community-Announcement-on-FCC-Proposal.pdf.

role that content licensing plays in the distribution of MVPD and online video programming.[64] If there are links in the distribution chain that lack direct privity with content owners, then complementary license regimes and technological protection measures are designed to ensure that the terms of distribution are respected as content flows from content providers to distributors through equipment to subscribers.[65] The DSTAC Report and Technology White Paper explain in great detail that trust infrastructure as it connects content providers, advertisers, MVPDs, security vendors, set-top box manufacturers, chip vendors, set-top box application providers, set-top box middleware providers, metadata providers, secure key provisioning services, and subscribers.[66] Apps serve as critical parts of these technological protection measures, but are not supported in the NPRM's proposal.

In DSTAC, the proponents of the disaggregation approach now proposed by the NPRM confirmed that they had no intention of having their retail devices comply with the terms of licensing agreements that content owners carefully negotiated with MVPDs that establish the terms for the packaging, presentation, and protection of content.[67] The device manufacturers are

---

[64] Letter from Neal Goldberg, Vice President and General Counsel, NCTA, to Marlene H. Dortch, Secretary, FCC, MB Docket 15-64 (Dec. 16, 2015); Letter from Motion Picture Association of America et. al. to Marlene H. Dortch, Secretary, FCC, MB Docket 15-64 (Nov. 5, 2015); Letter from A&E Television Networks, LLC, AMC Networks Inc., Discovery Communications, Inc., NBCUNIVERSAL, Scripps Networks Interactive, Inc., the Walt Disney Company and ESPN, Inc., Time Warner Inc., 21st Century Fox, Inc., Viacom Inc., to Marlene H. Dortch, Secretary, FCC, MB Docket 15-64 (Jan. 14, 2016) ("Programmers' January 14, 2016 *ex parte*").

[65] *See* Letter from Lawrence E. Strickling, Assistant Secretary for Communications and Information and Administrator, National Telecommunications and Information Administration, U.S. Department of Commerce, to Hon. Tom Wheeler, Chairman, FCC, MB Docket No. 16-42 (Apr. 14, 2016) at 4 ("NTIA Comments") (urging respect for the "security and integrity of MVPD programming," explaining that licensing agreements "typically include a variety of provisions beyond price – issues such as brand protection, advertising, program availability windows, and duration – that are important to enabling parties to defray the costs of producing, acquiring, and distributing that programming").

[66] DSTAC Final Report at 51-56 (DSTAC WG2 at 24-29); Sidney Skjei, A Technical Analysis of the FCC's Navigation Device Proposal at 5-9, attached as Appendix B ("Technical White Paper").

[67] DSTAC Final Report at 290-91 (DSTAC WG4 at 155-56). *See* Letter from Devendra T. Kumar, Counsel for TiVo, to Marlene H. Dortch, Secretary, FCC, MB Docket 15-64 (Jan. 13, 2016) at 1 ("The TiVo Representatives made clear that competitive device providers are not and should not have to be bound to programming contracts

not parties to the content license agreements, which is exactly why MVPDs need to limit such devices to the presentation of MVPD service in a controlled manner, such as through apps that honor all licensing commitments. In its comments, the National Telecommunications and Information Administration (NTIA) noted concerns of a "deleterious effect on the programming supply market, including that for specialized and minority programming" if "device providers were permitted to disregard … the agreements between MVPDs and programmers."[68] On this issue, NTIA expressly referenced the comments filed earlier in this docket by the Computer and Communications Industry Association, which asserted that "Device manufacturers, of course, cannot violate contracts to which they are not a party."[69]

Content owners have warned that such an "end run" around licensing agreements, upon which their "entire business model and ability to meet evolving consumer demand and

---

entered into by MVPDs to which they were not party.") Public Knowledge claims respect for copyright law, but it does not consider AllVid manufacturers to be a party to or bound by the copyright licenses and distribution agreements under which content providers lawfully segment the market. TiVo's representative stated in DSTAC that "operators have made agreements where there's not a disaggregation perhaps with the content owners, *[but] that those should not necessarily apply to a third party device which should have the freedom to not be bound*…" Transcript of March 24, 2015 DSTAC meeting at 96-97 (emphasis added). The Public Knowledge representative similarly stated, "an operator might have agreed to channel numbers and channel line ups *but … a lot of those sorts of restrictions that operators have agreed to may not make any sense in a retail place*." *Id*. at 38-39 (emphasis added). Another proponent of an FCC set-top box mandate dismissed video distribution agreements as irrelevant: "*Device manufacturers, of course, cannot violate contracts to which they are not a party."* Comments of Computer & Communications Industry Association, MB Docket No. 15-64 at 10 (emphasis added). Amazon's representative dismissed a negotiated programming agreement enabling customers to view multiple screens of Olympic events simultaneously, saying "I'm perfectly happy as a DISH subscriber to have never viewed that. …And if the device that I have is unable to do that, it's no skin off my back at all. In fact, I want a refund because I don't want to view that." Transcript of July 7, 2015 DSTAC meeting at 177 (Mr. Chaboud for Amazon). AllVid proponents assert that they would be "answerable to the marketplace, not to network operators or programmers." Public Knowledge Comments, MB Docket No. 15-64 at 15. According to AllVid proponents, *they would not be required to honor the conditions of "rights holders or intermediaries."* Electronic Frontier Foundation Comments, MB Docket No. 15-64 at 2 (emphasis added).

[68] NTIA Comments at 4.

[69] NTIA Comments at 4 (quoting Reply Comments of the Computer and Communications Industry Ass'n at 10, MB Docket No. 15-64 (filed Nov. 9, 2015)).

expectations is built," would have a "severe negative impact on the development of programming and innovation in distribution."[70]

At the Commission's Open Meeting, Chairman Wheeler said that the Commission should protect the "sanctity of contract" between content owners and MVPDs, and that retail devices should therefore pass through MVPD services unchanged. The Chairman repeated this promise in his testimony to Congress on March 2, 2016, pledging to lawmakers "that which the cable operators put out should remain sacrosanct and untouched."[71] The Chairman's Fact Sheet pledged that, "[e]xisting content distribution deals, licensing terms, and conditions will remain unchanged," and that "the Commission will not interfere with the business relationships … between MVPDs and their customers."[72] The Chairman therefore concluded that "[t]he proposal does not change a company's ability to package and price its programming to its subscribers."[73]

But the NPRM proposes that pay TV providers be forced to extract the *licensed* content from their services so that *unlicensed* third party device manufacturers and third-party apps developers may incorporate it into their own commercial offerings for new uses on new platforms. Copyright owners have the exclusive rights to determine whether, how and on what

---

[70] Programmers' January 14, 2016 *ex parte* at 3-4.

[71] *Hearing on Oversight of the Federal Communications Commission Before the S. Comm. on Commerce, Science, & Technology*, 114th Cong. (Mar. 2, 2016) (testimony of Tom Wheeler, Chairman, FCC), archived webcast available at http://www.commerce.senate.gov/public/index.cfm/hearings?ID=F3D2645F-5D15-4AC5-8323-6B64A4D2578F ("Chairman Wheeler Mar. 2, 2016 Congressional Testimony").

[72] *FCC Chairman Proposal to Unlock the Set-Top-Box: Creating Choice & Innovation* (Jan. 27, 2016), http://transition.fcc.gov/Daily_Releases/Daily_Business/2016/db0127/DOC-337449A1.pdf ("Chairman's Fact Sheet").

[73] *Id*.

platforms to disseminate their content.[74] Distribution rights for content are negotiated and reflected in licensing agreements.

Protecting the "sanctity of contract," "a company's ability to package and price its programming to its subscribers," and assuring "that which the cable operators put out should remain sacrosanct and untouched" should be bedrock for any rules adopted under Section 629. Instead of assuring the availability of retail devices that display services *"offered"* and *"provided" by MVPDs,* the proposed rules would harm those services, eviscerating the foundational licensing agreements on which they rely, by enabling retail devices to rearrange, alter, delete and repackage an MVPD's service into an entirely new service, without regard to the MVPD's service or to intellectual property. By simply granting a zero-cost compulsory copyright license for third parties to take a competitive service and repackage it as their own, without ever having to negotiate for it, the Commission would undermine the legal framework and incentives that created this programming in the first place and that led Amazon and Netflix to produce still more original content. As a result, Anthony Wood, Founder and CEO of Roku, explained in opposing the FCC's proposal that the "unintended consequences of circumventing [content licensing] arrangements are likely to include increased costs for consumers, reduced choices and less innovation."[75]

Although the FCC has no copyright jurisdiction at all, the NPRM suggests that the Commission could nullify negotiated programming license terms that restrict such uses.[76] The

---

[74] *See* 17 U.S.C. § 106(1)-(5); *see also Computer Associates Intern., Inc. v. Altai, Inc.*, 982 F. 2d 693, 716 (2d Cir. 1992) (§ 106 "affords a copyright owner the exclusive right to: (1) reproduce the copyrighted work; (2) prepare derivative works; (3) distribute copies of the work by sale or otherwise").

[75] Wood, *supra* note 60.

[76] *See* NPRM at ¶ 18 (asking "Do programmers prohibit MVPDs from displaying their programming on certain devices? … Should the Commission ban such terms to assure the commercial availability of devices that can access multichannel video programming…").

FCC's set-top box mandate would force any content owner that licenses its content to an MVPD to accept a zero-compensation "compulsory license" that would allow retail devices to do whatever they pleased with the content, regardless of the terms of their license with the MVPD. The second of the so-called "parity" provisions would require that if a content provider attempts to license rights to one MVPD, its programming must be opened for use by all device manufacturers and app developers "without discrimination," and without compensation to the content provider.[77] ESPN could not grant exclusive wireless rights to Verizon wireless. A content provider could not add a new offering that can only be supported by a new commercially available DRM unless it is also supportable by the very limited content protection system allowed for the three information flows.

Copyright owners would no longer be able to choose their distributors, segment the market or experiment with a new offering on just one platform. Today, Google's YouTube is negotiating streaming rights to TV series and movies to bolster its new subscription service, YouTube Red.[78] Tomorrow, it could stop negotiating and just help itself to any MVPD-delivered content for free. The FCC would simply hand those networks and programs over for exploitation in new uses by unlicensed distributors who would dilute their value and preclude these networks and other content owners from being compensated for these new uses. If every deal a programmer reaches with an MVPD means that it is free to anyone else, programmers will not be able to generate the same resources in creating that programming in the first place, or earn sufficient revenue to create the next show or movie.

---

[77] NPRM at ¶ 63 ("The second parity rule would require that "at least one Compliant Security System chosen by the MVPD must enable access to all the programming, with all the same Entitlement Data that it carries on its equipment, and the Entitlement Data must not discriminate on the basis of the affiliation of the Navigation Device.")

[78] Alistair Barr, *YouTube Seeks Streaming Rights to TV Shows, Movies*, WALL ST. J. (Dec. 2, 2015), http://www.wsj.com/articles/youtube-seeks-streaming-right-to-tv-shows-movies-1449104356.

Turning television programming into an open source commons is antithetical to copyright, but it is the very purpose of the FCC's set-top box mandate. Public Knowledge President Gene Kimmelman has explained that technology companies and the media industry are in a culture clash. "The notion of Google or Apple paying to carry someone is anathema to them: 'They should die to be on my platform.' Their value structure comes from a whole different revenue model" than traditional cable companies, Kimmelman said."[79] But copyright is not just a culture clash to be adjudicated by the FCC. Copyright protection is embedded in the U.S. Constitution.[80] It is ironic that TiVo CTO's claims that "Protecting copyright is really about protecting monopolies,"[81] yet TiVo is one of the most aggressive patent litigators in the world, and patents serve the same Constitutional goals as copyrights in protecting the creators of intellectual property. Copyright is the foundation for the cultivation of the programming that consumers love. Misappropriating that content is not a lawful, necessary, or sustainable way to obtain content.

Google sells premium positions to the high bidder, and demotes the search engine ranking of websites that promote the apps that Google cannot see into, a move that some have called 'app blocking.'"[82] One publisher caught in the crossfire explained that the goal of companies like Google and Apple is not "to support the endeavor of creative working people, but

---

[79] Matt Daneman, *Rising Video Pricing, Skinny Bundles Could Mean End for Some Programming, Summit Told*, COMMUNICATIONS DAILY (Mar. 3, 2016), subscription service (quoting Public Knowledge President Gene Kimmelman opining that new video models are likely to come from technology players like Apple, Google and Sony).

[80] U.S. Const. art. I, § 8, cl. 8 ("The Congress shall have Power . . . To promote the Progress of Science and useful Arts, by securing for limited Times to Authors and Inventors the exclusive Right to their respective Writings and Discoveries.").

[81] Monty Tayloe, *Third-Party Set-Tops That Change or Remove Ads Not a Concern, TiVo CTO Says*, COMMUNICATIONS DAILY (Apr. 20, 2016), subscription service.

[82] Katie Benner and Conor Dougherty, *Publishers Straddle the Apple-Google, App-Web Divide*, N.Y. TIMES (Oct. 18, 2015), http://www.nytimes.com/2015/10/19/technology/publishers-straddle-the-apple-google-app-web-divide.html?_r=0.

to get people addicted to their business models, their devices or interaction with a screen."[83] Amazon blocks sales of competing streaming boxes from Apple and Google.[84] Whether it is Apple manipulating the music market, Amazon pressuring Hachette Book Group by delaying the availability of Hachette book titles and promoting rival titles, or Google manipulating search for its own anti-competitive ends, grave concerns have been raised over these companies' misappropriation of intellectual property and siphoning off of value from its creators.[85] The NPRM invites the same misappropriation.

The proposed approach would undermine intellectual property and investment incentives. Copyright licenses granted to licensed multichannel distributors do not allow the distributors to hand off content for others to exploit or create new works. The proposal is not simply an innocuous plan to give consumers the option of a "red" box over a "blue" box that leaves

---

[83] *Id.*

[84] David Streitfeld and Katie Benner, *Amazon to Stop Selling Apple TV and Chromecast*, N.Y. TIMES (Oct. 1, 2015), http://www.nytimes.com/2015/10/02/business/amazon-to-stop-selling-apple-tv-and-chromecast.html?_r=0 ("Amazon said on Thursday that it would stop selling devices from Apple and Google that compete with its own streaming media players … Amazon is forbidding its vast army of third-party merchants from selling the Apple and Google devices after Oct. 29 …."). Apple TV previously refused to play Netflix's streaming service because Apple did not want to promote a competitor, and in 2012, Apple similarly pushed Google's YouTube app off its lineup of built-in apps on iPhones and iPads. *Id*.

[85] *See, e.g.,* Conor Dougherty, *F.T.C. Is Said to Investigate Claims That Google Used Android to Promote Its Products*, N.Y. TIMES (Sept. 25, 2015); Sam Schechner, *Google Rebuffs European Union on Antitrust Charges*, WALL ST. J. (Aug. 27, 2015), http://www.wsj.com/articles/google-responds-to-european-union-antitrust-charges-1440691150; Adrian Covert, *A Decade of iTunes Singles Killed the Music Industry*, CNN MONEY (Apr. 25, 2013), http://money.cnn.com/2013/04/25/technology/itunes-music-decline/index.html (stating that "[a]lthough iTunes has in many ways been a godsend to fans of digital music, it has been a source of endless frustration for the music industry" in part because "[a]fter manhandling the major record labels during a series of now-legendary negotiations, then-Apple CEO Steve Jobs was able to initially offer digital albums for $10 and any individual track off that album for 99 cents," which "had a disastrous impact on overall music revenue"); Carolyn Kellogg, *Amazon and Hachette: The Dispute in 13 Easy Steps*, L.A. TIMES (June 3, 2014), http://www.latimes.com/books/jacketcopy/la-et-jc-amazon-and-hachette-explained-20140602-story.html ("How is Amazon bullying Hachette? Amazon is subjecting many books from Hachette to artificial purchase delays. Books that had been available for next-day delivery now take 2-5 weeks to ship. Some titles don't surface in search as they should. And upcoming Hachette books, including the next J.K. Rowling/Robert Galbraith mystery 'The Silkworm,' are no longer available for pre-order. As a result, Hachette will sell fewer books."). The DSTAC report warns that "[t]he retail device might also use search functionalities to promote, or otherwise skew how consumers identify and choose which content to watch (such as manufacturers charging content sources to improve their search rankings)." DSTAC Final Report at 304 (DSTAC WG4 at 169).

everything else undisturbed, as the Chairman contended. Instead, it would dismantle the intellectual property and economic foundations for content creation and distribution. Nothing in the Commission's limited authority under Section 629 justifies the creation of a Trojan Horse in which the guise of promoting retail set-top box options is a front for granting Google and other big tech companies a free license to television content.

B. The Proposed Mandate Would Undo the Channel and Neighborhood Placements That Define How Programmers Connect to Their Audiences

One of the many specific licensing objectives that would be undermined by the NPRM is the ability of content owners to manage the presentation of their content through license terms governing channel location, neighborhood, branding, distribution or device limits, acceptable advertising, restrictions against overlays, and more. Many content owners specify the channel number or the "neighborhoods" in the channel guide (such as groups of major news channels) where the channel should be carried, which can help display or promote the channel to consumers. Broadcasters seek placement on the channel numbers by which they are known to consumers,[86] while cable networks may seek to be placed close to other major networks of similar type where they are more likely to be found by viewers browsing the guide. A family-friendly network may negotiate to be placed far from X-rated adult programming to protect its brand and its viewers. Other terms might restrict placement of licensed programming alongside pirated content in the channel guide and in search results (the way that a Google search so often does); prohibit inappropriate ads from being overlaid on the programming; define where and when their logos must appear; require their on-demand content to be placed in a program-network branded folder, rather than being commingled with other content; govern whether their

[86] Under Section 615 of the Communications Act, broadcasters have the right to require cable operators to carry their programming on the channel on which its station is licensed to broadcast over the air.

content can be recorded or transmitted outside the home, and prohibit search results that associate that programmer with anything pornographic.[87]

The Chairman's Fact Sheet assured that, "[e]xisting content distribution deals, licensing terms, and conditions will remain unchanged."[88] When the press asked him specifically whether "that include[s] the neighborhooding agreements, too," Chairman Wheeler answered that "programming agreements are included in this."

The NPRM specifically addresses service presentation, channel lineups and neighborhoods and says they "do not believe it is necessary for us to propose any rules to address these issues."[89] The NPRM says that MVPDs are to send out information about the channel assignment for programming to third party manufacturers or app developers,[90] but there is no proposal for a technical or legal means for compelling those third parties to comply with those assignments.

---

[87] *See, e.g.*, DSTAC Final Report at 12 (Working Group 1 Report ("DSTAC WG1") at 6) ("For example, the content provider may define a geographic area, give larger in-home rights than out-of-home rights, require a hardware root of trust for high value content, limit what content is available to less trusted devices, and require other terms that rely on an unbroken chain of trust. Licenses may also include terms to protect the content providers' brand, such as acceptable advertising, channel position and neighborhood, and subscription tier placement."); DSTAC WG1 Requirements of Content Owners on DBS Providers, MB Docket No. 15-64 (Mar. 13, 2015) at §7, available at http://apps.fcc.gov/ecfs/comment/view?id=60001097369 ("A content owner will also often require that its programs be kept apart from other programs, for example by disallowing subscriber searches and recommendations from bringing up lists that include both adult programs (e.g. 'X-rated') and that content owner's programs."); DSTAC Final Report at 296 (DSTAC WG 4 at 161) ("Content licenses define channel position, tier placement, acceptable advertising, scope of distribution permitted, security requirements and consistent presentation of branded content. Content owners license terms govern the geographic area for delivery, restrictions on copying or redistribution, specifications for how content is displayed, requirements that particular advertising, branding, polling or other interactive material be associated with their content, and/or restrict certain types of ads or overlays from being shown with their content. Content distribution rights have grown far beyond the simple states defined by the CCI bits sent to CableCARDs. Content providers may specify which devices are trusted and permitted to receive content. Some content is not available to devices unless they support a hardware root of trust. Content providers may limit distribution rights to the home, or may place limitations on out of home uses. Content may be permitted only for defined periods of time, and then erased.").

[88] Chairman's Fact Sheet at 2.

[89] NPRM at ¶ 80.

[90] NPRM at ¶ 39.

Neither link-layer security (like DTCP-IP) nor DRM systems create or enforce channel assignments. Channels are carried on frequencies or in IP streams, and their channel location is created through the MVPD guide or app that is stripped out by the NPRM.[91] Nor is there a legal tool for enforcement: the NPRM precludes any "business relationship with any MVPD for purposes of providing the three Information Flows," any MVPD testing and certification, and any industry licensing agreement as being "affiliated with MVPDs" and therefore prohibited.[92] Nor does anything in the NPRM even attempt to stop retail device providers from selling priority positions in their search returns, demoting the video programmers who do not pay them and relegating the most vulnerable minority and independent programmers to the remote reaches of a search algorithm.

The NPRM would strip away the ability of content owners and MVPDs to negotiate enforceable terms for the numbering, grouping and presentation of channels that effectuate license agreements and consumer expectations.

C. The Proposed Mandate Would Erode the Advertising Revenues that Support and Sustain Programming

Content owners and distributors reach agreements on the advertising that help fund the creation of content and its distribution by MVPDs. A cable network, for example, will sell most of the television advertising time itself and assign a small portion of advertising for the MVPD to sell. License agreements typically prohibit the substitution or overlay of commercials that could dilute advertising and violate exclusive sponsorships.

---

[91] *See* Technical White Paper at 19, 22-23.

[92] NPRM at ¶ 23.

The Chairman's Fact Sheet assured that "Existing content distribution deals, licensing terms, and conditions will remain unchanged."[93] The press asked Chairman Wheeler: "What exactly prohibits a manufacturer from putting extra advertising in?" The Chairman answered: "The rule will prohibit it. You need to have the sanctity of the content. Nobody is going to insert ads into it. No one is going to make a split screen where they're putting ads next to it. No one will say there's a frame around it saying you can go to Joe's auto repair. It's going to require the sanctity of the content be passed through unchanged." Just to be certain, there was a follow-up question: "The rule would specifically prohibit extra advertising?" Chairman Wheeler assured, "Yes sir."

But the NPRM specifically addresses advertising and affirmatively declines to prohibit any replacement, additional, overlaid, or replacement advertising. "We do not currently have evidence that regulations are needed to address concerns raised by MVPDs and content providers that competitive navigation solutions will … replace or alter advertising, [and] do not believe it is necessary for us to propose any rules to address these issues."[94]

The claim that TiVo and other UDCP manufacturers are not known by the Commission to have interfered with advertising (or other aspects of MVPD service that are similarly jeopardized by the FCC's proposal) is not a valid basis for lack of Commission concern about the same practices under its new proposal. In the first place, the claim is incorrect. The Commission has actually been provided with exactly that evidence: TiVo overlays ads on retransmitted broadcast signals in ways that would violate carriage agreements and the cable compulsory

[93] Chairman's Fact Sheet at 2.

[94] NPRM at ¶ 80.

license.[95] TiVo touts its ability to place ads that "[e]ngage[] the viewer during TV programs, not just during ad breaks."[96] With its "Pause Menu" advertising feature, TiVo explains that "[w]hen viewers hit pause, additional ad messaging appears in a screen overlay, making it easy and convenient for them to access your ad content."[97] As illustrated below, TiVo routinely overlays advertisements that would not be acceptable to the content owner or permissible under the MVPD's license agreement for that program. For example, these screen shots generated from a TiVo in the field shows TiVo placing ads promoting the show of one broadcast network overlaid on top of a show aired by another broadcast network:

[95] The cable industry specifically reported to the FCC that the CableCARD (DFAST) license "has not even sufficed for one-way services. It has not stopped TiVo from overlaying ads on top of broadcast signals carried on cable or streaming signals out of the home without license." Letter from Neal Goldberg, Vice President and General Counsel, NCTA, to Marlene H. Dortch, Secretary, FCC, MB Docket 15-64 (Jan. 21, 2016) at 2 ("NCTA Jan. 21, 2016 *Ex Parte*").

[96] TiVo Advertising Sales, TIVO.COM (last visited Apr. 13, 2016), https://www.tivo.com/ad-sales.

[97] TiVo Advertising: Pause Menu, TIVO.COM (last visited Apr. 13, 2016), https://www.tivo.com/tivoadvertising/pausemenu.html (describing Pause Menu advertising feature and stating "Pause Menu buys are also very flexible and can be targeted by program, series, and genre audiences as well as descriptive keywords"). TiVo also inserts advertising during fast-forward and rewind. *See* TiVo Advertising: Interactive Tags, TiVo.com (last visited Apr. 13, 2016), https://www.tivo.com/tivoadvertising/tags.html ("[A]dvertisers can choose from branded or unbranded tags and interactive Fast-Forward Billboards with audio cues. So when ads are viewed in time-shifted environments and during fast-forward and rewind modes, your message is always seen and heard."). *See also* NCTA Jan. 21, 2016 *Ex Parte* at 2 ("The fact that TiVo's practices have not invited litigation may merely reflect TiVo's limited market share, rather than demonstrating the success of the DFAST model.").

TiVo Screen Shots

TiVo ad for ABC Family "Shadow Hunters" overlays and obscures broadcast ad on FOX for its series "Second Chance" *January 2016*

TiVo ad for the Kids Choice Awards on Nickelodeon overlays an episode of "Goldie and Bear" on Disney Jr. *March 2016*

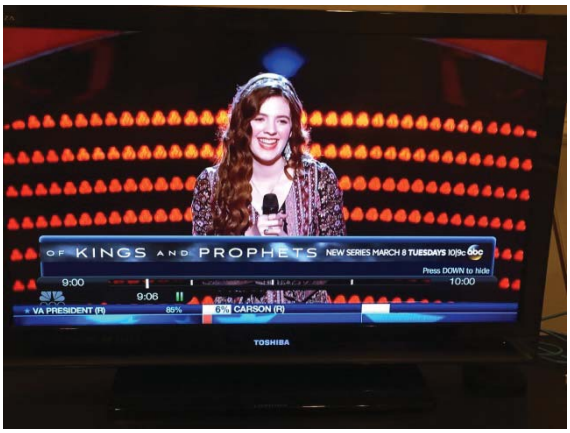

TiVo ad for the ABC series "Of Kings and Prophets" overlays an NBC broadcast of "The Voice." *March 2016*

TiVo ad for the ABC series "The Real O'Neals" overlays an episode of "Property Brothers" on HGTV. *March 2016*

TiVo's promotional material clearly shows its intent to monetarize its practice of offering advertisement overlays:[98]

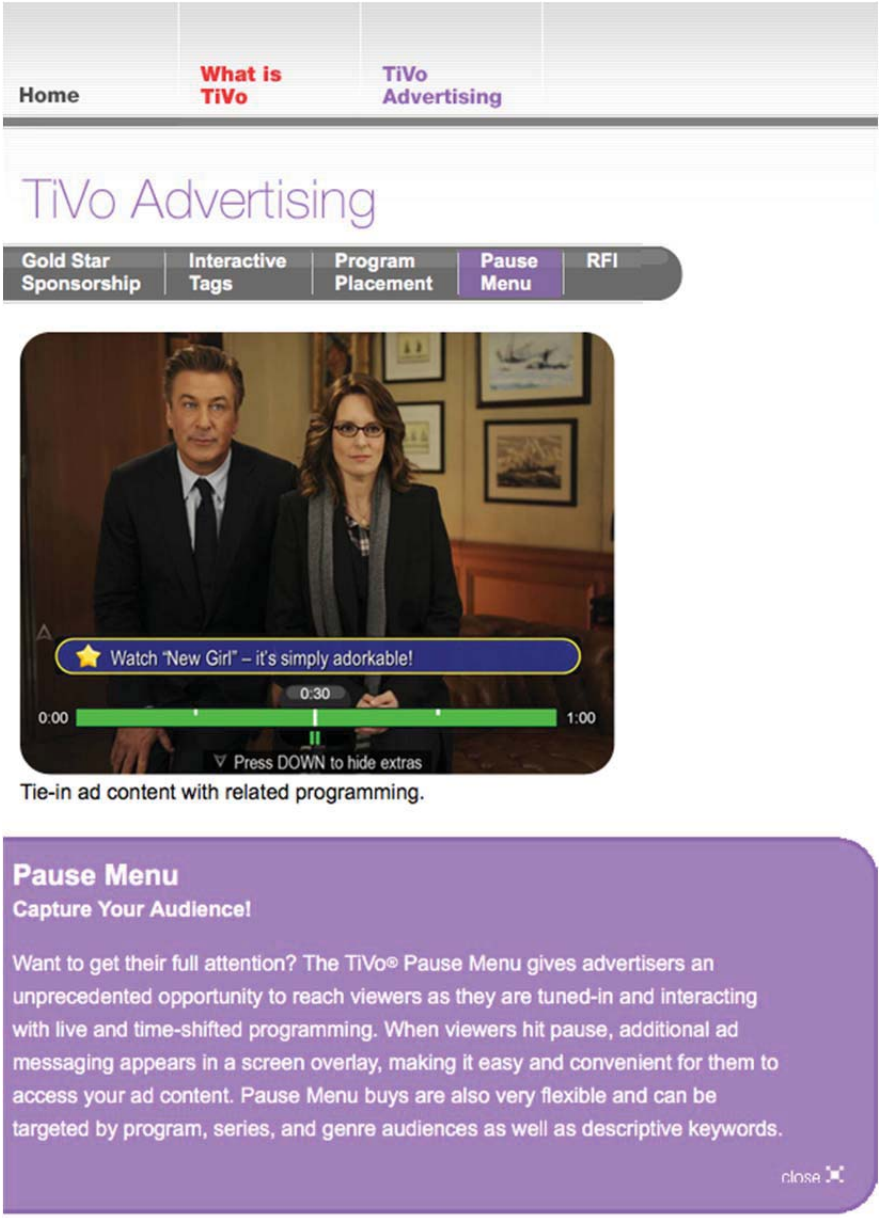

Second, even under the Commission's CableCARD regime, all UDCP manufacturers were required to enter enforceable licenses with CableLabs that provided that cable operators

[98] Source: TiVo Advertising: Pause Menu, TIVO.COM (last visited Apr. 13, 2016), https://www.tivo.com/tivoadvertising/pausemenu.html.

and content providers were third party beneficiaries of warranty commitments not to technically disrupt, impede or impair the delivery of service. But now the Commission has completely reversed course and retail box and app providers under the FCC proposal would not have any such agreement with the MVPD. Third, UDCPs are all physical devices located in the United States, are individually known to the cable operator when they are paired with the CableCARD, and can be individually deactivated by the cable operator. By contrast, the FCC's new proposal would enable foreign app providers to gain a virtual unsecured foothold into MVPD networks, behind their firewalls. Unlike with CableCARD devices, the MVPD would not have an enforceable license agreement, and might not be able to enforce any rights at all against a foreign entity outside the United States legal system. Moreover, MVPDs lack the ability to selectively deactivate individual retail devices or apps, and might not even be aware that their customer is using a particular retail product, beyond the fact that the customer would have the adapter that would be necessitated by the NPRM for the delivery of the information flows. For these reasons, the Commission cannot rely on the absence of problems to date as an indication that the "sanctity of contract" needs no new protections under the NPRM's proposals.

More importantly, the NPRM invites far more of this unauthorized advertising. There is nothing in the proposed rules that would prevent third party devices or apps from replacing all ads or selling advertising overlaid on, placed alongside, or appearing in search results for someone else's creative content, and there is no assurance that any compensation would be provided to the content owner. It proposes to enable tech companies and app developers to sell advertising on someone else's intellectual property without license or compensation to the owner.

Many observers have come to the realization that this may be Google's main objective of the unbundling it seeks in this proceeding.[99] As one analyst explained, "AllVid supporters see content merely as bait—a digital lure to attract their ultimate prize: data. If Google and the FCC succeed, creative content could be taken without negotiation or compensation and used by large tech companies to collect consumer viewing data—thereby undermining the economics of creation and consumer trust in one fell swoop."[100] By unbundling content from the apps and licenses that protect it and the privacy of cable subscribers, the FCC would permit third party device manufacturers and app developers to data mine the formerly-private viewing records of subscribers and their children to supplement their advertising profiles from other sources, and then pile on ads that can follow viewers around the TV and other advertising platforms – including in connection with their viewing of MVPD programming that Google would have taken without compensation to the MVPD or the content creators thanks to the NPRM's proposed unbundling mandate. *Communications Daily*, among others, has reported the likelihood that Google's proposals in DSTAC (which formed the basis of the NPRM proposal) were designed to permit Google to add television viewing data to its extensive individual profiles used for advertising across multiple platforms, and that the proposal has created "glee among tech companies."[101] *Communications Daily* further reported:

> Consumer viewing habits are the "next untapped market" for the search company's data collection efforts, said data analytics consultant Stephane Hamel.

---

[99] *See, e.g.*, Scott Cleland, *FCC's AllVid Proposal Is Really the Great Google Ad Grab*, PRECURSOR BLOG (Jan. 29, 2016), http://precursorblog.com/?q=content/fcc%E2%80%99s-allvid-proposal-really-great-google-ad-grab; Tayloe, *supra* note 6 (Mar. 9, 2016); Jon Brodkin, *FCC's Cable Box Rules Won't Prohibit Extra Ads Around TV Channels*, ARS TECHNICA (Mar. 22, 2016), http://arstechnica.com/business/2016/03/fccs-cable-box-rules-wont-prohibit-extra-ads-around-tv-channels/.

[100] Timothy Lee, *Piracy, Data and AllVid: If Past Is Prologue, Creators Should Worry a Google Delivered Pay-TV Service Would Promote Pirated Content*, MEDIUM (Apr. 18, 2016), https://medium.com/@TLee/piracy-data-and-allvid-if-past-is-prologue-creators-should-worry-a-google-delivered-pay-tv-546b562f59bd#.1yegh4286.

[101] *See* Tayloe, *supra* note 6 (Mar. 9, 2016).

> Google is able to track what Web users search for, send email about, and where they go online until they go into a closed system like Facebook, Netflix or a proprietary MVPD VOD app, said Hamel. Consumer viewing data would enable Google, or other third-party set-top makers, to build a more complete picture of a consumer's interests and shopping habits, Hamel said. That more-complete profile can then be used to make a more persuasive or targeted pitch to advertisers. Though other companies could take advantage of consumer data, few would be able to offer as complete a picture of a consumer's habits as Google, numerous industry officials told us. "This would take Google to a whole new level," said [Guggenheim Partners analyst Paul] Gallant.[102]

Google's goal of using TV navigation devices to integrate its TV and online advertising raises significant privacy concerns, as well. A new survey commissioned by the Digital Citizens Alliance found that only 14% of consumers said it would not bother them if ads related to their private activities on their phone and laptop showed up on their living room television.[103] Families may revealed a planned Mother's Day present the children had been researching online, or if the kids' programs were bombarded with ads about parents' illnesses or treatments from which they had been sheltered but that Google would know from its scans of emails and Internet search histories. Nearly two-thirds of respondents to the Digital Citizens Alliance survey were concerned that Google already had too much information about them, and a majority agreed that "Concerns about privacy or Google gaining too much power outweigh the benefit of" the NPRM's proposal to enable Google to replace their cable set-top box.[104]

Under questioning, the Commission has hypothesized that if consumers don't like the use of their viewing records in this manner they could choose another device or app.[105] But even if

---

[102] *Id*.

[103] Press Release, Digital Citizens Alliance, Americans Fear Privacy Intrusion from FCC Set-Top Box Proposal, According to New Survey (Apr. 20, 2016), available at http://www.prnewswire.com/news-releases/americans-fear-privacy-intrusion-from-fcc-set-top-box-proposal-according-to-new-survey-300254556.html (73% said that they would be bothered, and another 14% were unsure).

[104] *Id.*

[105] *See* Brodkin, *supra* note 99.

the Commission now generally wants to replace statutory privacy protections with a market-based approach for some, but not all players, the FCC could not justify allowing device providers to steal control of ad spots from its rightful owners. Today, television advertising agreements are protected with contractual and business arrangements, copyright licensing and distribution agreements, and technological protection measures to secure advertising and the advertising ecosystem against tampering. At this week's NAB conference, TiVo's representative to DSTAC confirmed that once those protections are stripped away under the NPRM, third parties could add, delete or substitute advertising.[106] The FCC is inviting a massive misappropriation of a $70 billion revenue stream that is funding the television ecosystem.[107] Even if third-parties only piled on new ads, advertising sold by unaffiliated third parties dilutes and undermines the value of television advertising sold by content providers and their licensed distributors, and would undermine that crucial source of funding.

Google's YouTube already takes four times as much or more of advertising revenue from online programmers than MVPDs receive from television content owners. The proposed rules would go much further. Under the mandate, retail devices could sell access to the television audience and bypass the programmers' and distributors' sales of television advertising, with no compensation to the content provider for that new use or the dilution in value of their TV advertising. By permitting tech companies to replace, overlay, or add advertising around

---

[106] *See* Tayloe, *supra* note 81 (Apr. 20, 2016) ("Third-party set-top boxes having the capacity to strip out or overlay the advertising in a pay-TV content stream with new, different ads shouldn't concern opponents of the FCC's set-top box proposal because market forces will prevent abuse, TiVo Chief Technology Officer Joseph Weber said." "Market forces also will keep third-party box makers from changing the neighborhooding or channel placement on an MVPD content stream, Weber said, since market reasons likely dictated that channel placement in the first place."). But if the Commission intervenes in the market, rejects the apps that the market has embraced, and removes the tools used to protect content, presentation, brands, and content licensing – and only for MVPDs – the consequences will not be the result of functioning "market forces."

[107] Miriam Gottfried, *Media Stocks: Digital Disruption Isn't a Death Knell*, WALL ST. J. (Apr. 11, 2016), http://www.wsj.com/articles/media-stocks-digital-disruption-isnt-a-death-knell-1460303138.

network programming (or the search for that programming), the FCC would dilute and devalue television advertising and undermine the economics that fund high-quality content and pay artists and entrepreneurs for their hard work in creating the programming consumers enjoy today.

As Dr. Wildman demonstrates in the economic study accompanying these Comments, the ability of third-party device manufacturers to subsidize their devices by monetizing "free" content would enable them to capture market share at artificially subsidized prices without offering a more efficient or superior device, undermining the competitive market that the NPRM professes to be promoting.[108] Dr. Wildman explains, "the benefits traditionally ascribed to competition are unlikely to materialize when some competitors either benefit from artificially created advantages or are hurt by handicaps imposed on them by other agents. … when sellers' offers are distorted by artificially created advantages and handicaps, buyers choices will no longer be based on side-by-side comparisons of the best deals competing sellers are capable of providing and efficiency will no longer be a prerequisite for marketplace success."[109] He concludes, "far from promoting a competitive marketplace, are likely to artificially distort competition to the detriment of consumers."[110]

Another way that the NPRM would undermine ad-supported content is that the three information flows would not support the interactivity and reporting tools that are used in modern advertising. For example, the new retail boxes would not support audit trails that verify placement and viewing or the audience measurement of viewership, such as Nielsen's audio

---

[108] Steven S. Wildman, The Scary Economics of the NPRM's Navigation Device Rules, attached as Appendix C ("Economic White Paper").

[109] *Id*. at 20.

[110] *Id*. at i.

watermarking.[111] The proposed rules do not prohibit retail devices from altering the audio codes[112] on which audience measurement tools rely, and in any event the NPRM does not provide for a return path to collect audience metrics. As a result, MVPD programming would be unaccountable and much less valuable and attractive to advertisers.[113] The new retail devices also would not support MVPD-delivered telescoped or interactive advertising.[114] This approach would strip MVPDs of the tools that support the advertising that helps fund content and the video ecosystem, and that provide an interactive and accountable ad platform that can continue to compete for ad revenues.

The NPRM would therefore cripple the ability of MVPDs and content owners to support content creation through ads, since it would leave retail devices free to alter or overlay advertising and assiduously avoids imposing any enforceable requirements on retail devices or apps to support critical audience measurement.

D. The Proposed Mandate Would Undermine the Economics for the Creation of Guides

The indifference to intellectual property is not confined to programming. The proposal would require MVPDs to extract and send guide information to third parties for their use in

---

[111] Nielsen's patented audio watermarking technology provides the capability to track content distribution from its origin to its final destination. This is accomplished through the insertion of a unique Program Content SID (Source Identification Code) at the broadcast network or national syndicator distribution center and insertion of a Final Distributor SID at a local broadcast station, local cable origination or national cable network distribution center. The SID is a second-by-second serial number used by Nielsen and the television industry to uniquely identify program content to ensure proper crediting of viewing. Nielsen's household meters detect and decode these watermarks to identify viewership. *See* http://www.rossvideo.com/signal-processing/nielsen/.

[112] Audio codes are inserted into the audio signal at frequencies that cannot be heard by the human ear and are used by a ratings meter to track viewed ads.

[113] *See* DSTAC Final Report at 287-88, 296 (DSTAC WG4 at 152-53, 161). The FCC has historically supported audience measurement as essential to ad-supported television, specifically including Nielsen Source Identification Codes in "must carry" requirements. But even if carried, there is nothing in the NPRM that would protect such codes from removal by a retail device or app.

[114] *See* DSTAC Final Report at 287-88 (DSTAC WG4 at 152-53).

creating their own guides.[115] But MVPDs assemble guides at great expense from content they license for limited uses from third parties such as Rovi and Tribune Media Service.[116] VOD data comes with restrictions from rights holders, such as business and branding rules on search and search returns. Each MVPD selects and arranges the data and creates a distinctive guide representing significant creative judgment with respect to what programming it selects, the way it organizes that programming into channel groups and tiers, and the way it combines programming with other original content, such as interactive applications, news tickers, games, portals to online video, and on-screen caller ID features.

The FCC's set-top box mandate simply calls for MVPDs to disregard their contracts, surrender protection of their own intellectual property and copyright and that of their content providers, and even post the data without securing it – undermining the very economics for the TV metadata industry to collect and provide this content in the first place.

E. The Subversion of Licensing Agreements Would Be Particularly Destructive to Minority and Independent Programmers

The proposed dismantling of programming license agreements would be particularly destructive to the economics of minority and independent networks, undermining their funding and handing off their value to Silicon Valley.

---

[115] The Notice even anoints one programming identification system among many as the "chosen" system. *See* NPRM at ¶ 38 (specifying that Service Discovery Data must include an "Entertainment Identifier Register ID," or EIDR). Regulatory mandates that set in stone a particular technical implementation for an indefinite period of time are certain to eventually handicap parties by chaining them to an obsolete technology. *See* Technical White Paper at 24-36.

[116] The CableCARD regime only supplied minimal channel data and left it to the device manufacturers to license metadata from third party sources and build their own guides. Under the applicable MOU, license and Commission rules, CableCARD-enabled retail devices only receive a virtual channel map and channel name from cable operators. TiVo licenses data from third parties at its own expense for its guide. OCUR manufacturers like Hauppauge rely on Microsoft to do the same.

The minority and independent entrepreneurs who have built new programming networks have worked hard to produce popular content, to build these businesses and negotiate licenses that protect their placement, their advertising, and the license and ad fees they receive to pay for the hard work of creating high-quality programming networks. With narrower audiences than the major broadcast and cable networks, they are especially sensitive to the channel location for reaching their audience and dependent on advertising revenues to fund their programming and operations. This also makes them especially vulnerable to the Commission's invitation for third-parties to subvert those distribution arrangements. The FCC's set-top box mandate does nothing to prevent tech companies from adding or overlaying advertising, dropping diverse and independent networks, or relegating them to the remote reaches of a search algorithm if they do not pay for priority. The companies advocating for the NPRM have hardly distinguished themselves with their diversity record. They have stated clearly they have no intention of honoring the hard-won gains that minority programmers have secured through negotiated licensing agreements with cable and satellite companies. If every deal a programmer reaches with an MVPD means that its content is free to anyone else, programmers would be hard pressed to maintain license and advertising fees. They would not be compensated for new uses, new advertising, or the dilution of their TV advertising and negotiated channel position.

Alfred Liggins, the CEO of minority-owned TV One, which focuses on programming for African-American audiences, has explained that the disaggregation sought by the NPRM would jeopardize his network's ability to create high-quality programming by undermining its licensing terms that secured its channel placement, advertising, and revenues.[117] Mr. Liggins warned that

[117] Alfred Liggins, *Protecting Consumer Choice, Not Special Interests, in Video Market,* THE TAMPA TRIBUNE (Oct. 24, 2015), http://www.tbo.com/list/news-opinion-commentary/protecting-consumer-choice-not-special-interests-in-video-market-20151024/ ("Liggins OpEd"). *See also* Krystal High, *AllVid Is Anything but All Good for*

allowing retail device providers "to raid the programming ecosystem in this way could cause the 'Golden Age of TV' that everyone celebrates today to collapse – and smaller, independent and diverse networks will likely be the first ones left behind."[118] These programmers would be stripped of their exclusive rights to determine whether, how and on what platforms to disseminate their content and the revenues with which they offer high-quality programming and create jobs in front of and behind the camera. Their only recourse would be to endure years-long lawsuits against some of the largest, deepest-pocketed tech companies just to protect their basic property rights. The CEO of Fuse Media similarly wrote to the FCC that the proposed mandate "very likely will undermine the goal of maintaining high-quality video content, particularly among ethnic, niche independent programmers."[119] The Multicultural Media, Telecom and Internet Council (MMTC) joined this chorus in asserting that the FCC's proposal "would create 'second class carriage' for diverse content and programming by making these offerings less visible and available to consumers in an already competitive video marketplace."[120] This is why Mr. Liggins of TV One warned that the FCC's proposal would "lead to "digital 'redlining' that could bury diversity programming in the farthest reaches of the program guide."[121] Fourteen leading Latino advocacy organizations, television networks, and content producers expressed their opposition, explaining that it would allow "Silicon Valley tech companies to repackage TV

Diverse Programmers, POLITICS365 (Nov. 2, 2015), http://politic365.com/2015/11/02/allvid-is-anything-but-all-good-for-diverse-programmers/.

[118] *Liggins OpEd*.

[119] Letter from Michael Schwimmer, CEO, Fuse Media, Inc., to Marlene H. Dortch, Secretary, FCC, MB Docket No. 15-64 (Jan. 21, 2016) at 1, available at http://apps.fcc.gov/ecfs/document/view?id=60001409844.

[120] Press Release, Multicultural Media, Telecom and Internet Council, MMTC: FCC Set Top Box Proposal Undermines Media Diversity in the Video Marketplace (Jan. 28, 2016), available at http://www.mmtconline.org/wp-content/uploads/2016/01/MMTC-Press-Statement-FCC-Proposal-Undermines-Media-Diversity-in-Video-Marketplace-012816.pdf.

[121] *Liggins OpEd.*

programming into their own products without having to pay for it or honor the terms of licensing contracts negotiated between the programmers and distributors."[122] Jose Marquez, the President & CEO of TechLatino, warned that "Chairman Wheeler's plan is a sweetheart deal for Silicon Valley that comes at the expense of entrepreneurs and content creators who are serving minority audiences and building businesses in our communities."[123] Seventeen leading national and social justice organizations joined with MMTC in opposing the proposal.[124]

Chairman Wheeler has testified that he expects retail providers could present all minority content, MVPD and online, in a neutral fashion. But Silicon Valley does not need a free license to *television* content to promote app and web offerings by minority programmers. Ever since programing has been available online, these tech companies have been able to seek out, promote, pay for, and feature independent or diverse programmers on their retail devices, but they simply have not done so. Given that record, search engines' history of "pay for priority" or favoring their own content, these companies may not be looked to as neutral presenters of content.

---

[122] Press Release, Future of TV Coalition, Opposition to FCC Chairman Wheeler's Set-Top Box Plan Grows: 14 Latino Organizations Join the Future of TV Coalition (Feb. 4, 2016), available at http://futureoftv.com/news-item/opposition-to-fcc-chairman-wheelers-set-top-box-plan-grows-14-latino-organizations-join-the-future-of-tv-coalition/#sthash.ATZi5hyj.dpuf. The organizations opposing the FCC proposal are: ASPIRA; BabyFirst Americas; Dialogue on Diversity; Freemind Beauty Productions; Hispanic Leadership Fund; Hispanic Technology & Telecommunications Partnership; League of United Latin American Citizens; MANA; A National Latina Organization; National Puerto Rican Coalition; SER-Jobs for Progress National; TechLatino: The Latinos in Information Sciences and Technology Association; United States Hispanic Chamber of Commerce; United States Hispanic Leadership Institute; Vme TV and Vme Kids.

[123] *Id.*

[124] *See* Letter from MMTC and 17 leading national and social justice organizations to Hon. Tom Wheeler, Chairman, FCC, MB Docket No. 15-64 (Feb. 11, 2016), available at http://www.mmtconline.org/wp-content/uploads/2016/02/AMENDED_MMTC-Set-Top-Letter_2-11-16.pdf. The organizations are the Asian Americans Advancing Justice (AAJC), Asian Pacific American Institute for Congressional Studies (APAICS), Blacks in Government (BIG), Cuban American National Council, Latinos in Information Sciences and Technology Association (LISTA), League of United Latin American Citizens (LULAC), LGBT Technology Partnership, National Association of Hispanic Publications, National Association of Multicultural Digital Entrepreneurs (NAMDE), National Black Chamber of Commerce, National Newspaper Publishers Association, National Organization of Black County Officials (NOBCO), National Organization of Black Elected Legislative (NOBEL) Women, National Puerto Rican Chamber of Commerce, OCA-Asian American Advocates, and the Rainbow PUSH Coalition.

The proposed approach would undermine the TV rights of minority and independent networks and threaten their viability – paradoxically, partly in the supposed service of offering new audiences to diverse online programmers.

F. The Proposed Mandate Would Eviscerate the Copyrights of MVPDs

The FCC's set-top box mandate would vitiate the copyrights not only of the content owners and the owners of programming guide data, but also MVPDs themselves, which have a protected copyright interest in the distinctive bundles of programming and additional content that comprise the service that they offer consumers. Each MVPD creates a unique service offering and exercises significant creative judgment with respect to what programming it selects, the way it organizes that programming into channel groups and tiers, and the way it combines programming with other original content, such as interactive applications, news tickers, games, portals to online video, and on-screen caller ID features. This creative judgment makes MVPD programming packages "collective works" and "compilations" protected under copyright law.[125] The Copyright Act gives copyright holders the exclusive right to create and control "derivative works" based on their copyrighted material.[126] A CE manufacturer would violate an MVPD's statutory rights if it breaks up and recasts the MVPD's compilation of services into its own service.[127]

---

[125] A "collective work" is "a work . . . in which a number of contributions, constituting separate and independent works in themselves, are assembled into a collective whole." 17 U.S.C. § 101. And a "compilation" is "a work formed by the collection and assembling of preexisting materials or of data that are selected, coordinated, or arranged in such a way that the resulting work as a whole constitutes an original work of authorship." *Id.*

[126] *See* 17 U.S.C. § 106(2).

[127] *See, e.g.*, *Video Pipeline, Inc. v. Buena Vista Home Entm't, Inc.*, 192 F. Supp. 2d 321 (D.N.H. 2002), *aff'd*, 342 F.3d 191 (3d Cir. 2003); *Greenwich Workshop, Inc. v. Timber Creations, Inc.*, 932 F. Supp. 1210 (C.D. Cal. 1996); *National Bank of Commerce v. Shaklee Corp.*, 503 F. Supp. 533 (W.D. Tex. 1980).

G. A Government-Mandated Takeover of Licensed Content is Entirely Unnecessary When Content is Already Available Through Direct Licensing

This proposed mandate to convert copyrighted content into an open source commons is entirely unnecessary even if "differentiated" content offerings are the goal. If retail device manufacturers wish to present copyrighted content in a manner that is different from the MVPD's app, they are free to negotiate their own agreements with content owners directly. Netflix, Hulu, Amazon, Sony PlayStation Vue, Sling TV, Verizon go90, and AT&T's three new DIRECTV online offerings all negotiate licenses with the content owners, and continue to add licensed programming to their offerings.[128]

For any tech companies prefer to leave the content acquisition and licensing work to others, then there is also a tailor-made solution to accomplish that objective: the presentation of video apps from MVPDs and from OVD service providers, like Sony PlayStation Vue, Amazon, Netflix or Sling TV, who *are* licensed to present service on retail device platforms designed for that very purpose. This approach is being enjoyed today on the most successful, widely and easily accessible, content-rich platforms that enable video providers to present their services as

[128] The NPRM postulated that it is unnecessary to require unbundled access to additional video services offered by MVPDs, such as "news headlines, weather information, sports scores, and social networking," because "that information is freely available from other sources on a variety of devices." NPRM at ¶ 40. By *that* standard, MVPDs should not have to unbundle their other programming, either. On-demand movies, live sports, and other programming is widely available from more than 115 legitimate online sources, licensed to Netflix, Hulu, Amazon, Sony PlayStation Vue, Sling TV, Verizon and AT&T for OVD distribution accessible directly over a variety of devices. Neil Fried, *The FCC Should Say "No" to AllVid: Part Two*, MPAA POLICY FOCUS BLOG (Feb. 3, 2016), http://www.mpaa.org/allvid/#.Vv12aXoYGEg. *See also* Jeff Baumgartner, *Newsy, Flama Join Sling TV Lineup*, MULTICHANNEL NEWS (Mar. 2, 2016), http://www.multichannel.com/news/content/newsy-flama-join-sling-tv-lineup/402975 (noting that Sling TV added two new networks to its core, $20/month "Best of Live TV" package); Todd Spangler, *Sony Cuts Price of PlayStation Vue TV Packages, Adds ESPN, ABC and Disney Channels*, VARIETY (Mar. 2, 2016), http://variety.com/2016/digital/news/sony-playstation-vue-tv-espn-disney-1201720714/ (noting that, under the Vue deal, the Disney and ESPN networks will be available with multiple streams and cloud-based DVR). It would be arbitrary for the Commission to establish an "available from other sources" standard in deciding which MVPD services should be made part of the information flows and then not follow that standard in any logical or consistent manner.

offered, to meet contractual and copyright commitments to their content suppliers, and to be able to make rapid changes as they continue to enhance their services.

The FCC's set-top box mandate would dramatically intervene in the market to forbid MVPDs – and MVPDs alone – from negotiating for content, delivering service and honoring the terms they negotiate with content owners in the same way that Netflix, YouTube, Amazon and other online video providers do, recreating the same discriminatory mistake that doomed the CableCARD to failure.

H. The FCC's Proposed Robustness Rules Cannot Secure Copyright Protections in Today's Market

The NPRM recognizes that the Commission has a "statutory mandate" to "ensure that [its] regulations do not impede robustness and compliance,"[129] but robustness and compliance is only a small fragment of security and protection against theft of service. The NPRM suggests that it might introduce into security robustness rules a requirement that retail navigation devices do not "technically disrupt, impede or impair the delivery of services,"[130] a phrase it takes from a warranty in the DFAST license unidirectional CableCARD devices (UDCPs). But adding such robustness language into the FCC's rules would not be sufficient to protect content. That approach misses the point of a licensing regime: it is not just the warranty not to technically disrupt, impede or impair the delivery of service that protected cable content in retail CableCARD devices. Instead, that warranty was incorporated into a license that provided that cable operators and content providers were third party beneficiaries that could enforce the warranty. Under the NPRM, unlike with the DFAST license, cable operators could not require a license, could not enforce its terms, and could not update the license to address new security

[129] NPRM at ¶ 71.

[130] *Id*.

requirements. The FCC cannot claim that the DFAST license model supports the NPRM's approach merely by borrowing a few of its words.

Moreover, as reported in DSTAC, the CableCARD/UDCP model adopted more than a decade ago was designed only for reception of one-way linear cable channels from digital cable systems, and was designed to be transitional.[131] The FCC specified that the rules for UDCPs did not extend to "interactive two-way digital television"[132] and required CE manufacturers to inform customers that a set-top box was needed to access advanced interactive digital cable services such as video-on-demand, a cable operator's enhanced program guide, and data enhanced television service.[133] The 2002 DFAST license was designed for these one-way UDCPs that received only unenhanced one-way linear service, not for modern connected devices. At the time, linear content was for in-home use. Internet streaming video was just beginning, with limited content at 56 kbps or slower.[134] Remote viewing and out-of-home use was barely imagined. And of course, DFAST was never a national standard: it applied to cable operators, but not to satellite or any other MVPD.

---

[131] Unidirectional CableCARD devices used their own guides because of basic technical limitations at the time: a one-way device could not support interactive services or the cable program guide, and suitable remote user interface technology did not exist. DSTAC Final Report at 284-85 (DSTAC WG4 at 149-50).

[132] *See* former rule 47 C.F.R. §15.123(a) ("Unidirectional digital cable products do not include interactive two-way digital television products.").

[133] *See* former rule 47 C.F.R. §15.123(d) ("Manufacturers and importers shall provide in appropriate post-sale material that describes the features and functionality of the product, such as the owner's guide, the following language: 'This digital television is capable of receiving analog basic, digital basic and digital premium cable television programming by direct connection to a cable system providing such programming. A security card provided by your cable operator is required to view encrypted digital programming. Certain advanced and interactive digital cable services such as video-on-demand, a cable operator's enhanced program guide and data-enhanced television services may require the use of a set-top box. For more information call your local cable operator.'")

[134] *Annual Assessment of the Status of Competition in the Market for the Delivery of Video Programming*, Ninth Report, MB Docket No. 02-145, 17 FCC Rcd 26901, 26943 ¶ 88 (Dec. 31, 2002).

The technical and licensing arrangements for later, two-way interactive retail cable devices were quite different. The major consumer electronics manufacturers – including Sony, Samsung, Panasonic, and LG – agreed that *two-way interactive* retail CableCARD devices would present the full cable service using an MVPD app running on common middleware, not on protocols and more comprehensive licensing arrangements.[135] The cable operator's application delivered the cable service to the interactive retail device for presentation as intended by the cable operator and consistent with the operator's content license obligations. The license developed for two-way interactive retail CableCARD devices that received the full cable service included broader warranties prohibiting disaggregation of cable service. Panasonic brought such an interactive television to market in 2008, demonstrating that the plan for such two-way devices was technically feasible, though swiftly succeeded by devices offering broader apps platforms.

The programming and other rights used to create today's competing MVPD services have evolved far beyond the unenhanced linear rights covered in DFAST. Today, linear channels are only a portion of MVPD service that has expanded to include tens of thousands of choices of on-demand content, plus integrated apps and other programming enhancements that distinguish each provider. Programming licenses establish highly-individualized linear and on-demand rights, in-home and out-of-home rights, trusted and untrusted devices, acceptable and unacceptable advertising, and various other terms governing the packaging, presentation, and protection of content. Each programming agreement is negotiated business-to-business and is updated and

[135] DSTAC Final Report at 284-85 (DSTAC WG4 at 149-50). The 2002 Memorandum of Understanding that led to the 2003 "Plug and Play" rules explicitly contemplated that the cable operator EPG would be provided to two-way devices. *Implementation of Section 304 of the Telecommunications Act of 1996: Commercial Availability of Navigation Devices*, Further Notice of Proposed Rulemaking, CS Docket No. 97-80, 18 FCC Rcd 518, 548 (Appendix B) (2003) ("MOU") ("for Advanced Interactive (two-way) Digital Cable Products … Cable operators' EPG will be provided for advanced interactive digital cable products via OCAP or its successor technology.").

expanded every few years to address new products, new usages, new content security threats and new devices.

Just as DFAST did not simply trust the device manufacturer not to harm service, neither do today's arrangements. MVPDs use apps and direct business-to-business agreements with device manufacturers to deliver today's service to retail devices in accordance with their distinctive rights and service offerings. Indeed, as TiVo expanded beyond one-way linear service, TiVo entered into direct agreements with distributors for delivery of two-way services, as it has with Comcast for video-on-demand and Netflix for streaming video.

I. Netflix and other OVDs Use the Same App Model to Enable Compliance with their Program License Agreements

Online video providers also rely on applications and licenses for distributing their respective services. Even when Netflix was building out its distribution relationships and offered a "public API" from which developers could add Netflix to their devices, Netflix required retail devices to present programming through the Netflix app, without adding advertising or overlays, and without circumventing the restrictions of its content licenses (such as streaming only rights). Under these former Netflix's terms, before it withdrew the standard license and required business-to-business agreements, the third-party device was required to present content through the Netflix app, respect the limited rights that Netflix has from its content licensors, and not to modify, add to, remove, overlay or obscure any of the Netflix content. For example, under the earlier standard Netflix license:

- The device *must present title detail and content through the Netflix app.*[136]

[136] "You may not hyperlink from any displayed Content directly into a playback experience. Rather, your Application must take the user to the corresponding Netflix-branded "title detail page" (i.e., the page within the Netflix website or a Netflix proprietary application (e.g., an application published by and branded "Netflix") that describes the applicable movie or TV show and provides the user the opportunity to initiate playback of the title).

- The device *may not modify, add to, remove, overlay or obscure any of the Netflix content*.[137]
- The device *may not link from the Netflix app to any other source*.[138]
- The device *may not engage in integrated search* linking to competing services.[139]
- The device *may not index* the Netflix services.[140]
- The device *must present the Netflix brand* on every Netflix screen using the exact logos authorized by Netflix. It *must not present Netflix using the device's own visual graphics*.[141]

Your Application cannot frame playback. For purposes of this section, "playback" means when a user views, plays, performs or displays a movie or TV show from Netflix." Netflix API Terms of Use §1.8, http://developer.netflix.com/page/Api_terms_of_use (last accessed Oct. 16, 2013) ("Netflix API Terms of Use"). Netflix no longer posts standard license terms after discontinuing support for its public API, and now negotiates private agreements.

[137] "[Y]ou agree that when using the API, you will not do the following, attempt to do the following, or permit your end users or other third parties to do the following: … modify, add to, remove, overlay or obscure any of the Content, including text, graphics, hyperlinks or legal notices contained therein, except that (a) with respect to graphic images, you may re-size such images while maintaining the same relative proportions of the image, and (b) where technically permitted by the applicable API, you may omit some of the Content offered through the API so long as you do not alter the Content you choose to display." Netflix API Terms of Use §1.9.

[138] "[Y]ou agree that when using the API, you will not do the following, attempt to do the following, or permit your end users or other third parties to do the following: link (i.e., hyperlink) from Content you display to any location or domain other than the Netflix website or a Netflix Application." Netflix API Terms of Use §1.9.

[139] "[Y]ou agree that when using the API, you will not do the following, attempt to do the following, or permit your end users or other third parties to do the following: …

- use or display Titles in an Application for search and discovery of content linking to competing services;
- use or display Title Metadata in an Application unless it is used solely to facilitate or enable the search and discovery of Netflix services. For example, if your Application enables users to search for the availability of a movie or TV show from Netflix as well as from other services, you may only display Title Metadata in association with the availability of the movie or TV show from Netflix, not the other services."

Netflix API Terms of Use §1.9.

[140] "[Y]ou agree that when using the API, you will not do the following, attempt to do the following, or permit your end users or other third parties to do the following: … use any robot, spider, site search/retrieval application, or other device to retrieve or index any portion of Netflix services." Netflix API Terms of Use §1.9.

[141] The device must "clearly and conspicuously attribute the source of all Content as received from Netflix." Netflix API Terms of Use § 1.7. "[W]e don't want users to get confused about who is responsible for what they're using." Netflix, Branding Requirements, http://developer.netflix.com/docs/read/Branding (accessed Oct. 16, 2013). "All

- The device *may not use or display Netflix content with any advertising or promotion or share any data with any data broker, ad network, or ad exchange.*[142]
- The device *may not charge for access to Netflix.*[143]
- Because Netflix has streaming only rights from content licensors, the device *may not store its programming*.[144]

Netflix has since moved to business-to-business contractual relationships to define these terms and assure delivery of the Netflix service.[145] The FCC's Video Competition Report reports how Netflix negotiates one to three year agreements with consumer electronics

---

applications must feature the Netflix API logo (or 'delivered by Netflix' in text) on any page or screen where the Netflix API has a presence and next to where the implementation appears in the UI." Netflix, API Naming & Logos p.1. "[D]o not recreate the logo or alter the configuration, type style or relative proportions" and "Do not create your own visual graphics." Netflix, API Naming & Logos p.4, developer.netflix.com (accessed Oct. 16, 2013). For displaying the Netflix queue, "There are 4 different button sizes for you to choose from. An important note, apply the buttons correctly to ensure that its visual impact and overall integrity are not diluted or compromised. Do not alter, redraw, or reconfigure the buttons." Netflix, API Naming & Logos p.2.

[142] "[Y]ou agree that when using the API, you will not do the following, attempt to do the following, or permit your end users or other third parties to do the following: …

- use or display the Content in conjunction with advertising offers, or other promotions
- sell, lease, share, transfer, sublicense any Content obtained through the APIs, directly or indirectly, to any third party, including any data broker, ad network, ad exchange, or other Application"

Netflix API Terms of Use §1.9.

[143] "[Y]ou agree that when using the API, you will not do the following, attempt to do the following, or permit your end users or other third parties to do the following: … charge, directly or indirectly, any fee (including any unique, specific, or premium charges) for access to the Content or your integration of the APIs in your Application." Netflix API Terms of Use §1.9.

[144] "[Y]ou agree that when using the API, you will not do the following, attempt to do the following, or permit your end users or other third parties to do the following: …

- interfere with or disrupt Netflix services or servers or networks connected to Netflix services, or disobey any requirements, procedures, policies or regulations of networks connected to Netflix services …
- download, scrape, post, or transmit, in any form or by any means, any part of the Netflix services or Content other than Content which you receive via the APIs in accordance with these Terms"

Netflix API Terms of Use §1.9. "You and your Application may not store Content via any method" except authentication data. Netflix API Terms of Use §1.10.

[145] *See* DSTAC Final Report at 277 n.47 (DSTAC WG4 at 142 n.47); Janko Roettgers, *Netflix Is Shutting Down Its Public API Today*, GIGAOM (Nov. 14, 2014), https://gigaom.com/2014/11/14/netflix-is-shutting-down-its-public-api-today/.

manufacturers "and that the degree of accessibility and prominence of its service is among the terms of its agreements," as is maintaining "the quality of service for Netflix's subscribers."[146]

J. The FCC's Discriminatory Mandate Cannot Deliver on Its Key Promise of Search Across All Program Sources

A key claim of the NPRM is that whatever the costs to television programs and distribution networks, the new retail devices could offer consumers the ability to search conveniently across MVPD and online content in a converged video world. But there are at least two fatal flaws in that claim. First, the destructive dismantling of MVPD service, networks, security and the disregard of copyright owners' exclusive rights is entirely unnecessary to meet that goal. The market is already creating content discovery tools that draw on multiple sources. Roku enables consumers to search Time Warner Cable content and online content from a common interface. The Samsung platform announced at CES 2016 supports cross-app search and "smart remotes" that remember which HDMI input to use.[147] Search is available on web sites like wheretowatch.com, nextguide.tv, gowatchit.tv, and yidio.com. Co-branded guides, such as one shared by Suddenlink and TiVo, support integrated search. Business-to-business deals allow Comcast video on demand to be searched by a TiVo, and a separate agreement between TiVo and Netflix helps consumers search both at the same time. Cable operators are exploring integrated search that may include other apps on leased set-top boxes. Integrated video search has just been introduced to iOS 9, and is supported in Android, Apple TV OS, and Amazon Fire TV, all using different approaches. Integrated search is developing organically in the market right now, without the need for an FCC set-top box mandate.

---

[146] Sixteenth Video Competition Report at ¶ 256 (citing Netflix, Inc., SEC Form 10-K at 5).

[147] *See* Whitney, *supra* note 28.

Second, the NPRM simply cannot deliver cross-platform search capability because it proposes rules that apply only to MVPD content. Netflix, Hulu, Amazon and other content providers operate within their own apps and do not permit others to search inside or repurpose their programming for other uses – unless they negotiate or choose such arrangements. Under the FCC's proposal, only MVPDs would be compelled to permit Google to search within and reuse MVPD content, while Netflix, Hulu, Amazon and other online content providers would not. No navigation device provider (whether retail or MVPD) could help themselves to the content of any online apps—including the dominant online video providers—unless they reach an agreement with those providers. The FCC set-top box mandate would create disincentives for broader search agreements to develop by forcing MVPDs to provide disaggregated content to third-party devices without placing any corresponding obligations on non-MVPDs to share access to their program information. By creating an un-level field through disparate treatment, the proposed rules would disincent online video providers from negotiating with MVPDs to share this information for the benefit of consumers. The promise that the proposal will allow consumers to search across all content cannot be fulfilled with such discriminatory rules.

V. THE PROPOSED MANDATE WOULD NOT DELIVER CONSUMERS' THEIR SUBSCRIPTION MVPD SERVICE

Video distributors operate as differentiated retailers who compile programming, guides, navigation features, applications and other inputs into distinctive, branded, copyrighted offerings. Video providers compete by continuing to add more value for consumers and associating that value with their distinct brands of service.

The Chairman's Fact Sheet pledged that "the Commission will not interfere with the business relationships … between MVPDs and their customers. The proposal does not change a company's ability to package and price its programming to its subscribers." At the press

conference, Chairman Wheeler claimed that the NPRM would deliver the same service, it is "simply a question of does the signal go through a red box or a blue box?" As demonstrated below, the Chairman's oversimplified assertion is incorrect.

A. The Proposed Mandate Would Move Cable Service Backwards to One-Way

The NPRM is firmly focused on returning to a past where cable service was basically on/off and little more.

Modern video runs on code. Code runs the iOS and Android apps on smartphones, as well as game consoles, smart TVs, and PCs. Code runs Netflix, Hulu, Amazon and HBO Now, and code runs modern interactive cable service on predictable platforms. As explained in the DSTAC Report, "All MVPDs use software and integrated service to assure that services are delivered to consumers as advertised. They all render their services as an app to a predictable execution environment in the set-top box and in other client devices."[148]

Retail CE devices do not offer the same predictable execution environment that a multichannel provider relies upon in its leased set-top boxes, nor do they all offer a common execution environment in their own devices.[149] Just like an Android phone does not run iOS apps, a TV that runs on Tizen does not run an app built for Roku. The solution is for publishers to build apps to present their services in each of those different execution environments.

The app model is in broad use in the consumer electronics world as a means of abstracting the differences between varied and rapidly changing consumer electronics platforms

---

[148] DSTAC Final Report at 37 (DSTAC WG2 at 10).

[149] *See* DSTAC Final Report at 39 (DSTAC WG2 at 12) ("Android, iOS, and HTML all differ from each other, and an Android app is not an iOS app and neither are HTML, although they may behave identically to an end-user. Likewise, the Microsoft Xbox, Nintendo Wii and Sony PlayStation platforms each have their own unique development environment, interface, streaming platform and encryption technology. Connected televisions use competing middleware. Panasonic is using Firefox OS. Sony, Sharp, and TP Vision are using Android TV. Vizio uses the Yahoo Connected TV Platform. Samsung just announced its new Tizen platform. LG uses webOS. Apple will use iOS.").

and varied and rapidly changing services. The app model uses IP applications with software-downloadable DRM or platform-supported DRM that started with the PC Web browsers and now extends to the consumer-owned mobile, game, TV and set-top devices described above. Video service providers use the same app model to serve a wide variety of rapidly changing customer owned devices while maintaining their ability to change the service rapidly.[150]

Chairman Wheeler presented a diagram at the Commission's February 18, 2016 meeting that professed to illustrate how set-top boxes technically operate to allow subscribers to receive and interact with their services. But as detailed in the accompanying Technical White Paper,[151] the diagram ignores all critical elements upstream and downstream of the device and the critical role of code in making cable service work.

[150] DSTAC Final Report at 39 (DSTAC WG2 at 12).

[151] *See* Technical White Paper.

Figure 1: FCC View of the Set-Top Box

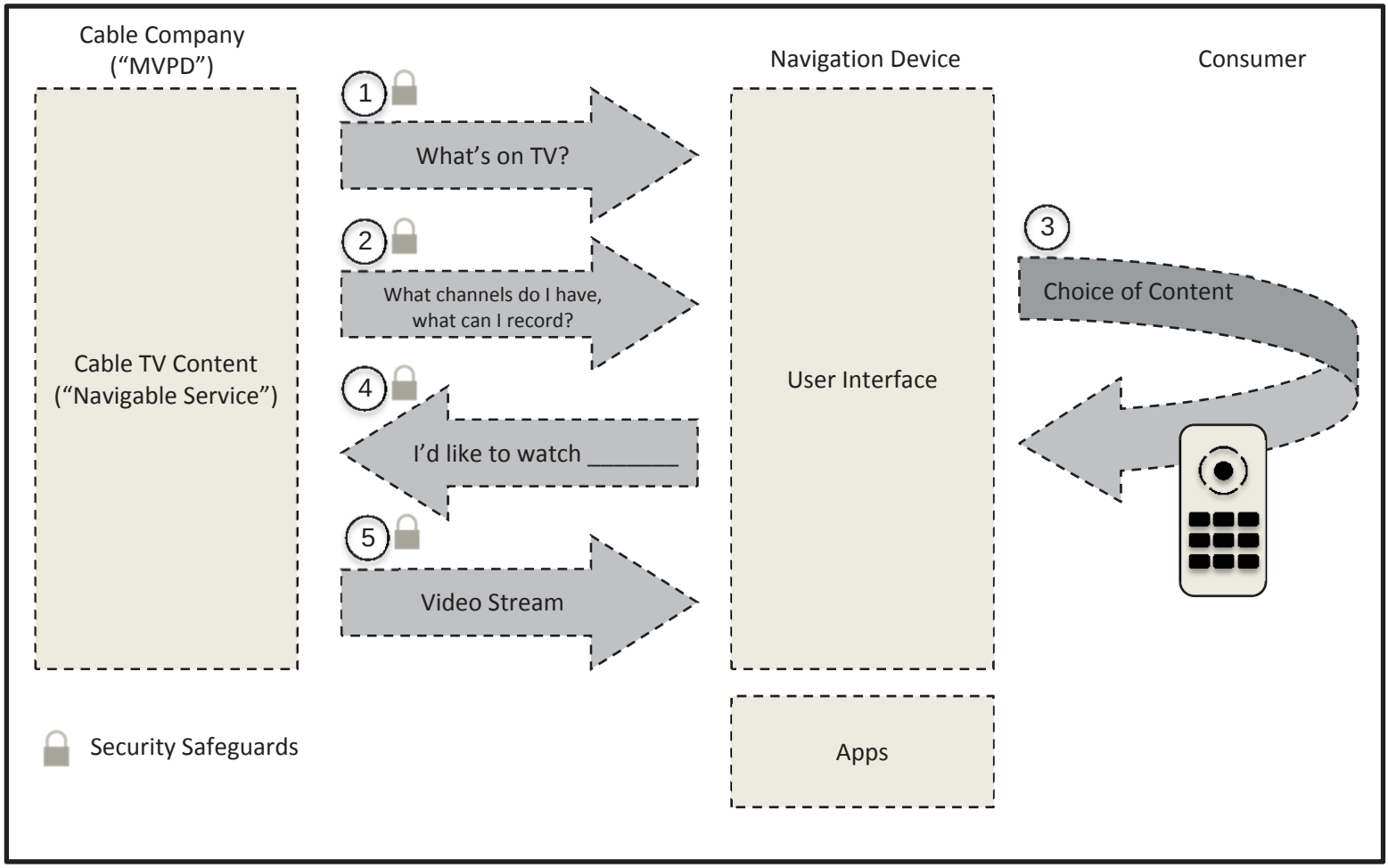

Figure 2: FCC's Omissions of Non-Security Aspects of Set-Top Boxes

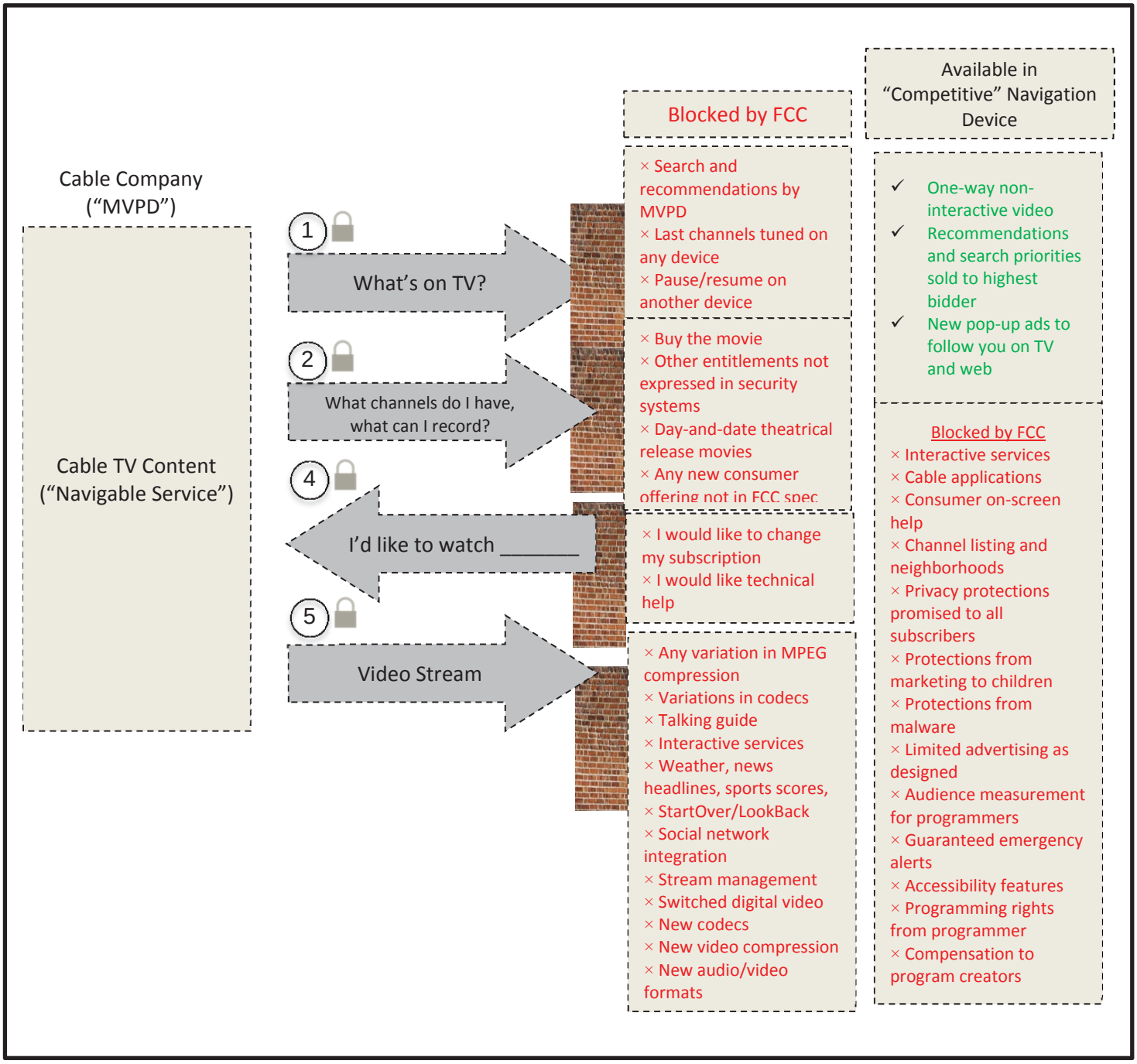

The proposed FCC set-top mandate would take cable service back a generation or more by removing the code that powers the features of the modern communications landscape, and requiring that MVPDs convey a stream of disaggregated video and information flows in a standardized format.[152] By stripping out an MVPD's code and requiring it to stream content to all retail devices, it would strip out the interactivity, features, and enhancements with which cable operators have enriched their offerings for today's consumers.

B. The NPRM Would Strip Out the Modern and Interactive Features of Today's Cable Service

The proposed mandate would take cable back to last century's one-way broadcast plus video-on-demand, undoing two decades of work to enhance service for consumers and compete with other platforms. Before the MVPD service even reaches the retail box, the FCC's set-top box mandate strips out "news headlines, weather information, sports scores, and social networking" as "unnecessary to include," along with the MVPDs apps, search tools, and user interfaces – eliminating the features with which MVPDs compete and market to consumers, and preventing consumers from receiving the services they subscribe to and frustrating competition among MVPDs.

The NPRM asks, "Is there anything in our proposed definition that would foreclose the possibility that a competitive navigation device could offer these [MVPD] services" such as enabling customers "to switch between multiple sports games or events or camera angles, view[] video-on demand with full interactive 'extras,' shopping by remote, or see[] the last channels they tuned."[153] The answer is yes. Without code running on predictable platforms, a consumer

[152] It is unclear from the proposed rule whether one or more "formats" are expected, but it is clear that all features other than video are dropped as "unnecessary."

[153] NPRM at ¶ 40.

cannot use a cable operator's interactive guide, buy-by-remote on a cable shopping channel, call up an interactive telescoped commercial, switch between multiple sports games or events or camera angles, watch video-on demand with full interactive 'extras,' upgrade service, or expect parental control settings to work when the guides and apps that power them are removed. Without the cable operator's code and app, consumers could not initiate on-screen upgrades, downgrades, or order technical assistance. Consumers could not receive their familiar MVPD experience across all of the customer's devices – TVs, tablets, smartphones, and set-top boxes, tune back by using their viewing history, or start watching a show on one device and pick it up from the pause on another device.[154] Consumers could not upgrade or change their subscription, or order technical support from their on-screen guide. Technicians and customer service representatives would no longer have the diagnostic tools inside devices or apps to help identify and resolve problems remotely.[155] The NPRM would also strip away the tools needed to support video-on-demand as a business—a verifiable audit trail, the ability to create unique usage rights, pricing on a per-asset basis, electronic sell-through, and the selectable output control necessary for movies to be ordered day-and-date with theatrical release.[156]

In DSTAC, the proponents of what became the FCC set-top box mandate suggested that *some* but not all of these services could be provided through undefined "widgets," but no

---

[154] DSTAC Final Report at 281, 290, 291 (DSTAC WG4 at 146, 155, 156); Technology White Paper at 3-14.

[155] *See* DSTAC Final Report at 291-92 (DSTAC WG4 at 156-57).

[156] *See* DSTAC Final Report at 189-90, 251, 259, 286, 289 (DSTAC WG4 at 54-55, 116, 124, 151, 154); Technical White Paper at 9-14. The Commission asks whether cloud DVR should be added to the required interfaces. MVPD apps already allow retail devices to manage recordings of their MVPD programming. Given the availability of cloud storage and the announcement by online programmers of their own cloud DVR services, under the Commission's standard of analysis, cloud DVR is "unnecessary to include." *See, e.g.*, David Katzmaier, *Sony PlayStation Vue Review: Cut the Cable TV Cord, Keep the Channels and DVR*, CNET.COM (Mar. 17, 2016), http://www.cnet.com/products/sony-playstation-vue/; Janko Roettgers, *Aereo's Heir: Simple.tv to Launch New Cloud DVR Called ShowDrive*, VARIETY (Sept. 21, 2015), http://variety.com/2015/digital/news/aereos-heir-simple-tv-to-launch-new-cloud-dvr-called-showdrive-exclusive-1201598770/.

technically-feasible plan was ever mapped out. They abandoned the proposal in October 2015, and so does the NPRM.

The NPRM suggests that MVPDs should not be concerned if retail devices cannot display all of their services, because "MVPDs do not make every service that they offer available on every device or application that they provide to subscribers."[157] Chairman Wheeler has also testified that if consumers do not like the limitations of their retail boxes, they can stop using them and buy a different one. This is preposterous. Cable operators today seek to deliver all of their services to their customers. In this highly competitive market in which DBS, telco, and over-the-top providers are constantly innovating, it is crucial for cable operators' customer-retention efforts to be able to roll out new services and features to all of their customers, even to those who do not know that they might be interested in that feature at the time that it is launched. A customer considering cancelling the MVPD service may not be aware of all of its compelling new features. And if customers did become aware, it is hardly ideal to have to tell them that the device they purchased cannot access it and they would need to throw away their equipment purchases and try again.

The services available in apps vary with the rights available and the relative robustness of the retail device and keep expanding over time.[158] In the supposed name of expanding service, the NPRM would turn back the calendar twenty years and strip cable operators and other MVPDs of the very features and improvements that consumers are enjoying *today*.

---

[157] NPRM at n.117.

[158] *See* DSTAC Final Report at 265 (DSTAC WG4 at 130); *see also* supra pp. 11-14, *infra* p. 149.

VI. THE PROPOSED RULES WOULD DEPRIVE CABLE SUBSCRIBERS OF THE CONSUMER PROTECTIONS GUARANTEED BY LAW

A. The Proposed Mandate Would Gut Statutory Protections for Privacy and Children

For decades, Congress and the Commission have relied on provisions of Title VI of the Communications Act and associated regulations to protect important consumer interests, such as privacy and protection of children. Because these requirements are statutory, the Commission lacks authority to diminish them. But the NPRM would gut these protections by putting retail navigation providers in a position to circumvent these statutory and societal obligations without establishing any actual effective means of enforcement. The NPRM's proposed solution is to require MVPDs to collect unenforceable certifications from retail providers of their supposed compliance and then police that only compliant navigation devices and services can access the information flows in order to be used by customers.

That approach is doomed to failure. MVPDs, especially small MVPDs, could not keep track of which devices were even accessing their services, much less be sufficiently omniscient to know whether every single one of those devices was complying with respect to all programming, at all times, for all customers. And even when they could, MVPDs would not have any clear technical means to disable offending navigation devices or services, or any commercially acceptable way of redressing consumers who would be upset by deactivation of their retail devices.[159]

Title VI of the Communications Act requires cable operators to protect the privacy of their video customers' individual viewing history and other personally identifiable information with rules that are far stronger than the laws covering Internet companies like Google and

[159] Technical White Paper at 20-21.

Amazon that might offer retail set-top boxes under the NPRM.[160] Cable operators cannot unilaterally sell personally identifiable viewing records, and consumers have choices to limit disclosures.[161] Cable operators must inform their customers of the personally identifiable information they collect, how they use it, how customers can access and correct it, and how customers may prevent disclosure of their information to third parties, and how customers may enforce their rights.[162] Cable operators also must follow comprehensive restrictions to protect viewers when addressing government demands for protected data.[163] They also incorporate legal privacy protections into new services and into their apps for new platforms, protecting consumers however and wherever they access their video. If an operator breaches any of these statutory duties, customers can seek direct relief and statutory damages through a private right of action in federal court.[164]

None of these legal requirements apply directly to retail device or app providers. MVPD apps are designed not to reveal customer usage information to platform hosts, so the privacy of consumers using retail devices today is still protected. But under the NPRM, every device manufacturer and app developer would have continuous access inside MVPD firewalls, with the ability to access entitlement servers containing detailed customer information, including the specific movies purchased.[165] Retail device and app providers would thus be able to access and use consumers' private viewing history, beyond the reach of the consumer privacy laws that assure today that the information is not misused. Public Knowledge President Gene Kimmelman

---

[160] *See* 47 U.S.C. §§ 522(13), 551. 47 U.S.C. § 338(i) applies § 551 privacy obligations to satellite.

[161] 47 U.S.C. § 551(c).

[162] 47 U.S.C. § 551(a).

[163] 47 U.S.C. § 551(h).

[164] 47 U.S.C. § 551(f).

[165] *See* Part VII; Technology White Paper at 15-17, 40-41, 43.

recently conceded that the potential value of this information to those who would manipulate it for private gain is "the dirty little secret" of the business of providing navigation devices – and no doubt a leading reason why Google is now so interested in getting in on this business in a way that would circumvent the privacy protections of the Communications Act.

MVPDs are also required by statute to limit the number of commercials they air in programming directed to children and restrict the display of e-commerce marketing to children.[166] As discussed below, the NPRM would similarly jeopardize these requirements for consumers using retail devices.

The Chairman's Fact Sheet said that "The proposal *seeks to ensure* that the privacy protections that exist today [and the restrictions on children's advertising] will also apply when alternative navigation devices are used."[167] At the press conference, Chairman Wheeler said that manufacturers and app developers must meet Title VI privacy protections: "To be able to license the standard, you're going to have to comply with the Title VI Section 631 privacy rules which apply to cable operators."

The reality is much different. As demonstrated below, the Commission cannot realistically rely on its proposed certification framework, the privacy practices of retail providers, or other laws to protect consumer privacy, children's advertising restrictions, or other Title VI objectives.

---

[166] *See* 47 U.S.C. § 303a; 47 C.F.R. § 25.701(e); *Policies and Rules Concerning Children's Television Programming,* Report and Order, 6 FCC Rcd 2111, 2117-18 (1991), *recon. granted in part*, 6 FCC Rcd 5093 (1991).

[167] Chairman's Fact Sheet at 2-3.

1. The Proposed Certification Regime Would be Ineffectual

The proposed set-top box mandate does not provide a means for enforcing the consumer protections provided by Congress. It would instead conscript MVPDs as supposed enforcers for assuring that retail devices comply, but it denies them the critical tools to actually fulfill such a responsibility. As detailed in the Technical White Paper, "[a]n MVPD-developed app, running in a trusted application execution environment on a retail device, ensures an end-to-end trust infrastructure that can protect consumer's viewing information."[168] MVPD apps by design comply with all Congressional and FCC requirements for the protection of privacy and children's programming.[169] But under the FCC's proposal, the MVPD would be unable to run software controls within a trusted execution environment within the third-party device or app. Because of lack of user authentication, under the NPRM, MVPDs would not even necessarily know of the existence of all of the devices and apps that were accessing their information flows, much less which customers are using them and which ones they are using. And because an MVPD would have no license or other business-to-business agreement with the device manufacturer or app developer, an MVPD would have no power to audit a device, app, its provider or affiliates, or require response to inquiries investigating compliance. Nothing in the NPRM provides a technical or legal means for MVPDs to see into what the retail devices and applications are doing, what their manufacturers or developers are doing with data, or to ensure that all consumer choices and options are respected.[170]

For example, a customer that has exercised its choices with a cable operator under Section 631 – to access and correct personally identifiable information, or to opt-in or opt-out of

[168] Technical White Paper at 16.

[169] Technical White Paper at 14-15.

[170] Technical White Paper at 15-17.

particular data uses – may expect those choices to cover the retail device in the bedroom as well as the leased device in the living room, but there is no mechanism for policing or assuring that result. Even if the MVPD could detect a retail provider's usage of customer viewing data and could see that the retail provider purports to offer a different opt-out mechanism, the MVPD would not be able to know whether the retail provider actually faithfully tracks and honors its customers' opt-out requests. In addition, because some of the retail device providers would be large companies that can gather information on consumers from multiple sources, MVPDs may not know whether customer information was acquired through the retail navigation device or another source – even if a consumer complained.

Nor could an MVPD know whether a retail device overlaid prohibited advertisements into children's programming; even if the MVPD used an observer to watch every hour of its programming on every model of retail device, even that wouldn't assure that another device wasn't delivering targeted ads or prohibited children's marketing to other devices not under watch.[171]

Even if an MVPD did become aware of an alleged violation, the NPRM does not explain any technical means to selectively disable access to offending navigation devices. The NPRM's license-free, unbundling approach mandates a stream of disaggregated information flows in a standardized format. By its very nature, that model was designed to preclude MVPD control, and does not lend itself to selective, conditional access that an MVPD could use to enforce individualized compliance.

Even if the MVPD could devise a technical means to deny the information flows to the offending devices, the NPRM would place them in an untenable situation. If an MVPD had

[171] Technical White Paper at 17.

reason to believe that a device might be operating in violation of its certificate, but the evidence is unclear, the MVPD lacks any appropriate enforcement tools. If an MVPD were right and could terminate the offending device, it would punish the consumer and provide no remedy for the privacy violation by the offending manufacturer or app developer. It would also generate significant customer service inquiries, truck rolls, and complaints. If an MVPD instead allowed a suspect device to continue to operate, it would risk inviting creative plaintiffs to seek recovery from an MVPD for allegedly enabling a privacy violation.

Certification cannot remediate these problems or replicate Section 631. For example, if law enforcement or the government seeks personally identifiable viewing records from a cable operator, the customer first receives notice and an opportunity to contest, and the government must obtain a court order after presenting clear and convincing evidence that the subscriber is engaged in criminal activity. Google, TiVo, and Amazon do not provide these rights to customers, and there is no basis to expect the FBI to agree to voluntarily apply this higher standard when seeking viewing records from retail navigation providers, especially if the FCC had knowingly weakened the privacy protections for consumers under Section 631.

As another example, cable operators provide customers with a clear and conspicuous explanation of their right to bring claims against the operator in federal court to seek statutory damages for violations of the statutory privacy obligations. Neither the FCC nor retail device manufacturers can grant that private right of action, even if a privacy policy was amended and a certification was submitted to say so.[172] Thus, whether or not an offending device is permanently deactivated by an MVPD, nothing in the NPRM's proposal could afford the

[172] Theodore B. Olson, Helgi C. Walker, and Jack N. Goodman, The FCC's "Competitive Navigation" Mandate: A Legal Analysis of Statutory and Constitutional Limits on FCC Authority at 38-39, attached as Appendix A ("Legal White Paper").

affected customer the ability to recover statutory damages in federal court and to seek redress against the offender—the rights that Congress intended they have under Section 631. Neither the FCC nor the FTC has authority to provide a comparable consumer remedy, nor is there meaningful recourse by either against an offshore Chinese box manufacturer or app developer. The NPRM does not offer an effective framework for assuring that consumers are actually protected.

For all of these reasons, the proposed certification regime could not secure the robust privacy protections that apply to MVPDs under the Communications Act, or compliance with other Title VI obligations. And even if the manufacturers certified that they would meet the obligations of each MVPD to its consumers, there is no comparable consequence to them for breaking the promise. Even NTIA casts doubt on the proposed certification process, which NTIA says "leaves important questions to be addressed – most importantly, who will ensure compliance with a certification and through what legal authority."[173] The answer is that no one would be able to ensure compliance under the NPRM's proposal. For that reason, the only viable option to "ensure that expansion of competition in navigation devices does not diminish existing privacy protections for multichannel video programming subscribers,"[174] as urged by NTIA, is to rely on the protections of Section 631 that are incorporated through the provision of MVPD apps to retail devices.

[173] NTIA Comments at 5.

[174] *Id.*

2. The NPRM Would Rely on Trust of Retail Device Manufacturers and App Developers Despite their Dismal Privacy Record

In the absence of technical, licensing, or legal tools to enforcing compliance, the Commission's proposal is essentially to just trust Internet companies, device manufacturers, and app developers, but the record does not warrant such trust.

Google and other unbundling proponents have a history of repeat infringements of privacy:

- Google was fined a then-record $22.5 million by the FTC for misrepresenting to consumers its practice of bypassing browser privacy settings, in violation of an earlier FTC settlement.[175]

- Google's Street View vehicles collected personal information from consumers that was transmitted over unencrypted Wi-Fi connections, a practice that went on for three years until the Commission opened an investigation that led to imposition of forfeiture.[176]

- Google Chrome remotely installed software that enabled Google to listen to users through their devices' microphones without permission,[177] and a class action is pursuing allegations that Google bypassed the cookie-blocking features in Internet Explorer and Safari to place cookies on the plaintiffs' browsers without their consent, thus enabling them to track plaintiffs' web use without their consent.[178]

- Google pledged in January 2015 to safeguard the privacy and security of students' personal data by enforcing strict limits on data retention, offering comprehensive

---

[175] Press Release, Federal Trade Commission, Google Will Pay $22.5 Million to Settle FTC Charges It Misrepresented Privacy Assurances to Users of Apple's Safari Internet Browser (Aug. 9, 2012), https://www.ftc.gov/news-events/press-releases/2012/08/google-will-pay-225-million-settle-ftc-charges-it-misrepresented.

[176] *See In re Google, Inc.*, Notice of Apparent Liability for Forfeiture, File No. EB-10-IH-4055, 27 FCC Rcd 4012 ¶ 9 (Apr. 13, 2012); *see also Joffe v. Google, Inc.*, 746 F.3d 920, 923 (9th Cir. 2013).

[177] Samuel Gibbs, *Google Eavesdropping Tool Installed on Computers without Permission,* THE GUARDIAN (June 23, 2015), http://www.theguardian.com/technology/2015/jun/23/google-eavesdropping-tool-installed-computers-without-permission; Samuel Gibbs, *Google Pulls Listening Software from Chromium*, THE GUARDIAN (June 25, 2015), http://www.theguardian.com/technology/2015/jun/25/google-pulls-listening-software-chromium.

[178] *In re: Google Inc. Cookie Placement Consumer Privacy Litigation,* Case No. 13-4300 (3rd Cir., Nov. 10, 2015) http://www2.ca3.uscourts.gov/opinarch/134300p.pdf . The Third Circuit stated: "What is notable about this case is how Google accomplished its tracking. Allegedly, this was by overriding the plaintiffs' cookie blockers, while concurrently announcing in its Privacy Policy that internet users could 'reset your browser to refuse all cookies'" and assuring Safari users that "their cookie blockers meant that using Google's in-house prophylactic would be extraneous."

security standards and being transparent about the collection and use of the student data. But the Electronic Frontier Foundation has asked the FTC to investigate Google's continued collection of student data for non-education purposes from 50 million students who participated in the Google for Education initiative.[179]

- Google retracted an earlier promise that only family-friendly ads would be shown in its YouTube Kids app.[180]

- TiVo[181] and Vizio[182] sell customer viewing records to advertisers, data that consumers expect to be private under Title VI protection.

- Another retail privacy notice warns that "if your spoken words [received by voice recognition feature] include personal or other sensitive information, that information will be among the data captured and transmitted to a third party through your use of Voice Recognition."

The Commission has abdicated any role for itself. It rejected a petition to require edge providers to honor do-not-track requests, saying unequivocally that "it has no intent to regulate edge providers,"[183] and it declined to pursue application of its Section 222 privacy rules to edge

---

[179] *See Electronic Frontier Foundation v. Google*, Complaint and Request for Investigation, Injunction and Other Relief before the Federal Trade Commission, available at https://www.eff.org/document/ftc-complaint-google-education; Allison Grande, *Google Breaking Pledge to Protect Student Data*, *FTC Told*, LAW 360 (Dec. 1, 2015), http://www.law360.com/articles/732949/google-breaking-pledge-to-protect-student-data-ftc-told; Jeremy Gillula, *Google's Student Tracking Isn't Limited to Chrome Sync*, EFF DEEPLINKS BLOG (Dec. 2, 2015), https://www.eff.org/deeplinks/2015/12/googles-student-tracking-isnt-limited-chrome-sync.

[180] *Advocates Call Changes to YouTube Kids App Inadequate*, COMMUNICATIONS DAILY (Oct. 5, 2015), subscription service ("This means that the vast majority of the content available on [the app] is not subject to any limits on advertising," said Angela Campbell of Georgetown University's Institute for Public Representation.)

[181] David Lazarus, *Using TiVo? Your Personal Choices May Be Going Straight to Advertisers*, L.A. TIMES (Nov. 6, 2015), http://www.latimes.com/business/la-fi-lazarus-20151106-column.html (TiVo has partnered with Viacom to manipulate individual viewing and usage information with other personal information to target ads to specific subscribers. The article quotes Neil Richards, a law professor who specializes in privacy issues at Washington University in St. Louis, as saying, "This is something that hasn't been seen before in the consumer space. The potential for abuse is enormous.").

[182] Vizio Smart TVs have been collecting and sharing 10 million users' viewing habits, regardless of whether the consumer agrees to the privacy policy and terms of service. Dan Goodwin, *Man-in-the-Middle Attack on Vizio TVs Coughs Up Owners' Viewing Habits*, ARS TECHNICA (Nov. 11, 2015), http://arstechnica.com/security/2015/11/man-in-the-middle-attack-on-vizio-tvs-coughs-up-owners-viewing-habits/; *see also* Andrea Peterson, *This Smart TV Takes Tracking To A New Level*, WASH. POST (Nov. 12, 2015), https://www.washingtonpost.com/news/the-switch/wp/2015/11/10/this-smart-tv-takes-tracking-to-a-new-level/.

[183] *Consumer Watchdog Petition for Rulemaking to Require Edge Providers to Honor Do Not Track Requests*, RM-11757, 30 FCC Rcd 12424, ¶ 1 (Nov. 6, 2015).

providers.[184] When Vizio was reportedly caught tracking its customers' viewing habits and sharing them with advertisers and others without consent, its defense was that existing statutory privacy protections do *not* apply to its business.[185]

The NPRM asks whether state or other laws could provide the same level of privacy protection. The answer is no. The FCC suggests that the Video Privacy Protection Act (VPPA) – which was adopted to regulate video tape rental stores after Robert Bork's video rental history was published during his Supreme Court nomination – "may" apply; but in court, Google convinced a judge that the VPPA does not apply to Google.[186] The CVCC, TiVo, and Hauppauge letters cited by the NPRM asserted that "state" laws would apply, without identifying any. The cable privacy law in Google and TiVo's home state of California only applies to "cable" and "satellite," and they say they are neither.[187] The California Online Privacy Protection Act clearly does not protect most American consumers, and most states do not have laws that even partly cover the protections afforded by the Communications Act. The "European Union privacy regulations" mentioned in the NPRM do not cover U.S. subscribers. None of the laws invoked by the NPRM provide protections that are co-extensive with Title VI. Cobbling together scattershot state laws, or even court interpretations that vary from district to district, does not provide the same level of privacy protection as Section 631. Trying to do so would contravene Congress' decision to create national privacy protections for all MVPD customers

---

[184] *Protecting the Privacy of Customers of Broadband and Other Telecommunications Services*, Notice of Proposed Rulemaking, WC Docket No. 16-106, FCC 16-39, ¶ 13 (Apr. 1, 2016).

[185] *See* Pulkit Chandna, *Vizio Slapped with Two Class-Action Lawsuits over Alleged Smart-TV Spying*, TECHHIVE (Nov. 17, 2015), http://www.techhive.com/article/3005718/smart-tv/vizio-slapped-with-two-class-action-lawsuits-over-alleged-smart-tv-spying.html (Vizio "has previously argued it's not a video tape service provider" under the VPPA).

[186] *In re Nickelodeon Consumer Privacy Litigation*, 2014 WL 3012873 (D.N.J. July 2, 2014). The outcomes in other VPPA cases vary with facts and the location of the court.

[187] California Penal Code § 637.5.

and NTIA's admonishment that "the baseline privacy protection a subscriber receives should not hinge on where the consumer lives."[188]

The Commission therefore can only expect that the protection of consumers and children would be undermined (rather than "ensure[d]")[189] by the NPRM, in conflict with the Communications Act. The Commission is proposing to create a gap in privacy and marketing protection for subscribers and their children that it cannot close.

B. The Proposed Mandate Would Fail to Ensure Delivery of Emergency Alert Messages

The NPRM would also fail to ensure the delivery of emergency alert system (EAS) messages on retail devices. The Chairman's Fact Sheet said that retail devices would be "required to pass through EAS alerts,"[190] and the NPRM claims that its certification framework will "ensure" that EAS messages are transmitted to customers using retail devices.[191] However, the NPRM does not address how the proposed rules would assure that retail devices would support the many different emergency alert protocols in use by MVPD networks, not just the one simulated in a recent Google demonstration.

EAS is delivered through a variety of means across MVPDs (e.g. in-band vs. out-of-band signaling, presentation differences, text crawl with audio override, forced tune, barker channel, etc.).[192] The NPRM glosses over how EAS messages would be delivered to a retail device. The NPRM cites a CVCC ex parte that hypothesized that "EAS messaging would be handled via a

---

[188] NTIA Comments at 6, n. 27.

[189] NPRM at ¶ 73.

[190] Chairman's Fact Sheet at 2.

[191] NPRM at ¶ 73.

[192] DSTAC Final Report at 288 (DSTAC WG 4 at 153).

standard,"[193] but no such standard has been developed and the NPRM does not offer any viable consensus plan for doing so.

As with privacy and the protection of children, the NPRM proposes to rely only on retail device providers' certifications that they will pass through EAS messages. But for the same reasons, those certifications themselves cannot reasonably be relied upon to assure compliance. The proposal provides no technical means by which MVPDs could monitor whether a certifying device or app is actually passing through and rendering EAS messages, nor does it provide MVPDs with the technical tools to deny a non-compliant device or app access to the three information flows.[194] Given the importance to public safety of assuring that EAS messages are received by consumers, the Commission cannot responsibly adopt the proposal and expect EAS to be rendered.

MVPD programming apps are designed to translate the many different MVPD network emergency alert delivery protocols in order to deliver emergency alerts to existing retail devices. The NPRM discards the MVPD app model and would require EAS messages instead to be passed through the information flows. If retail devices receive EAS messages in that disaggregated form, rather than through apps that orchestrate their presentation, there is no means to assure timely presentation of EAS messages, or to prevent EAS and closed captioning from blocking each other. The NPRM abandons the mechanisms that have developed in the market to deliver emergency alerts. What the FCC tries to erect in their place cannot work as a technical or practical matter.

---

[193] NPRM at n.207 (citing *CVCC Jan. 14 ex parte* at 2-3).

[194] *See* Technical White Paper at 17.

C. The Proposed Mandate Would Impair Accessibility

Since passage of the Twenty-First Century Communications and Video Accessibility Act ("CVAA") in 2010,[195] MVPDs have worked to ensure the accessibility of multichannel video programming in accordance with the FCC's rules implementing the CVAA. The NPRM threatens to create wide gaps in accessibility protections that would no longer flow through to consumers on retail devices and would lead to customer confusion.[196]

Closed Captioning. The NPRM proposes that MVPDs pass through closed-captioning with the associated programming,[197] but accessibility stops there: MVPDs have no technical means to monitor how closed captions are treated by the retail device. A cable operator could not control or determine whether captions are being presented as required of MVPDs,[198] or whether customers are able to customize the size, font, location, color, etc. of those captions.[199]

The NPRM also anticipates that third-party developers will "differentiate" their products by interlacing cable and over-the-top content within a single interface or guide.[200] However, unless an online program has been previously captioned for viewing on television, there is no obligation to provide it with captions. As a result, deaf and hard of hearing consumers using

---

[195] *Twenty-First Century Communications and Video Accessibility Act of 2010*, Pub. L. No. 111-260.

[196] Technical White Paper at 18-19.

[197] NPRM at ¶ 40.

[198] 47 C.F.R. § 79.102 defines how captions must be displayed.

[199] 47 C.F.R. § 79.103 specifies the customization options for captions that must be made available to consumers.

[200] For example, the NPRM claims that "MVPDs and unaffiliated vendors must be able to differentiate themselves in order to effectively compete based on the user interface and complementary features they offer users (*e.g.*, integrated search across MVPD content and over-the-top content, …." NPRM at ¶ 27. Chairman Wheeler has testified that content from online video providers and MVPDs would also be integrated. *See Hearing on the Federal Communications Commission's Fiscal Year 2017 Budget Request Before the Subcommittee on Financial Services and General Government*, 114th Cong. (Mar. 15, 2016) (testimony of Tom Wheeler, Chairman, FCC), archived webcast available at http://appropriations.house.gov/calendar/eventsingle.aspx?EventID=394443.

retail devices may be surprised and confused to find some programming that is captioned and some that is not.

Contact Information. Under the FCC's captioning rules, cable operators must provide detailed contact information to consumers for the handling of closed captioning issues, and must include contact information in an FCC database and identify personnel who can assist in handling immediate captioning concerns. Under the NPRM, device manufacturers and makers of apps would not have similar obligations to help customers with captioning issues, yet cable operators will have no ability to assist customers with problems with their third party devices or apps.

Talking Guide. The "talking guide" rule requires larger MVPDs to make their user interfaces audibly accessible to the blind and visually impaired by the end of 2016.[201] While the NPRM says that the information flows include "any information necessary to make the Navigable Service accessible to persons with disabilities under our rules,"[202] users of retail device and apps may not be able to use their cable operator's "talking guide," such as Comcast's Voice Guidance on the X1 Entertainment Operating System, which won an FCC Chairman's Award for Advancement in Accessibility in 2015.[203]

Video Description. The NPRM would leave a similar gap in requirements to provide video description for the blind and visually impaired. Cable operators must provide or pass

---

[201] *See* 47 CFR § 79.108.

[202] NRPM at ¶ 40.

[203] *Innovators Honored at 2015 Chairman's Awards for Advancement in Accessibility*, FCC.GOV (last accessed Apr. 1, 2016), https://www.fcc.gov/general/innovators-honored-2015-chairmans-awards-advancement-accessibility ("Voice Guidance on the X1 Entertainment Operating System 'speaks' what's on the television screen to allow viewers who are blind or visually impaired to navigate user interfaces and video program information from cable set top boxes' on-screen menus. With this tool, viewers without sight can easily find, select, record and watch anything on their channel lineup. The Talking Guide also allows customers who are blind or visually impaired to independently access settings to enable or disable the Secondary Audio Program to access content with video description.").

through programming with video description,[204] but once a cable operator feeds content to third-party apps, there is no obligation for those apps to support the secondary audio stream used for video description.

Emergency information. The accessibility gap also leaves retail box owners without guaranteed access to the audio version of video emergency information (such as weather alerts). Beginning in 2017, cable operators and other MVPDs must ensure that any app or plug-in that *they* provide is capable of passing through in a secondary audio stream the aural representation of any video emergency information (such as weather alerts).[205] Once a cable operator feeds content to third-party apps, there is no obligation for the third party to support this emergency information.

Customer Support. The Commission has determined that cable must meet "information, documentation, and training requirements" so that individuals with disabilities are able to operate accessible navigation devices. Cable operators are also required to provide such subscribers with customer and technical support in call centers and service centers, and must consider various accessibility-related topics when designing training programs.[206] But there is no such obligation applied to third party apps.

Rather than grappling with any of these accessibility issues, the NPRM asks whether self-certification should be required of retail box and app providers, and whether MVPDs should stop programming from going to devices provided by providers that do not certify to compliance with accessibility rules. But as with the NPRM's defective approach to copyright and consumer protection requirements, there is no proposal for a technical or legal means for MVPDs to see

[204] *See* 47 CFR §§ 79.3(b)(4)-(5).

[205] *See* 47 CFR § 79.2(b)(6).

[206] *See* 47 CFR § 79.108(f).

into what the retail devices and applications are doing or to enforce compliance. Nor is there any means for the Commission to enforce such accessibility requirements against the third-party apps developers who have been excluded from the Commission's rules implementing the CVAA.[207] Alternatively, the NPRM asks "should we leave these matters to the market?" – a remarkable turnaround for an agency that has established a highly regulatory regime for ensuring that customers with disabilities obtain accessible products and services from their MVPDs.

The proposed mandate would create a serious accessibility gap – one that is entirely avoidable had the Commission instead embraced the apps-based model already in use by MVPDs and retail devices that already incorporate compliance with accessibility rules.

VII. THE PROPOSED MANDATE WOULD UNDERCUT THE SECURITY THAT PROTECTS PROGRAMMING, NETWORKS, AND CONSUMERS

All MVPDs operate within complex security systems with layers of protections that create a 'chain of trust' from the content supplier to the distributor to the consumer to respect content license and distribution restrictions. These security protections are well documented in the DSTAC Report and in the Technical White Paper.[208] By law, the FCC may not "jeopardize

[207] *See, e.g., Accessible Emergency Information, and Apparatus Requirements for Emergency Information and Video Description: Implementation of the Twenty-First Century Communications and Video Accessibility Act of 2010*, Second Report and Order and Second Further Notice of Proposed Rulemaking, MB Docket No. 12-107, 30 FCC Rcd 5186 ¶ 32 (May 28, 2015) (explaining that apparatus manufacturers will not be responsible for providing a "simple and easy to use mechanism to activate the secondary audio stream for emergency information" on third-party MVPD applications downloaded by consumers for use with mobile and other devices, as such manufacturers do not control third-party applications); *Closed Captioning of Internet Protocol-Delivered Video Programming: Implementation of the Twenty-First Century Communications and Video Accessibility Act of 2010*, Report and Order, MB Docket No. 11-154, 27 FCC Rcd 787 ¶ 94 (Jan. 13, 2012) (declining to include within the scope of the statutory term "apparatus" third-party software that is downloaded or otherwise added to a device independently by the consumer after sale, and explaining that "[we] do not believe that it is necessary to hold manufacturers responsible for such 'third-party software' or to regulate software companies directly").

[208] Technical White Paper at 5-9, 37-38.

security" of MVPD services or impede the legal rights of MVPDs "to prevent theft of service."[209]

The Chairman's Fact Sheet said that the FCC will "ensure the same security for copyrighted material as the traditional set-top box" and that the FCC "will allow each MVPD to determine the content protection systems it deems sufficient to prevent theft and misuse, and will not impede the introduction of new content protection systems."[210] But the NPRM does exactly the opposite, stripping cable operators and other MVPDs of the security tools with which they protect their licensed content, services, networks and customers.

A. Loss of Security for the Channel Lineup

The Chairman has said that under the proposed rules, "[e]xisting content distribution deals, licensing terms, and conditions will remain unchanged,"[211] and when asked "[d]oes that include the neighborhooding agreements, too?" assured that "[p]rogramming agreements are included in this."[212] But the NPRM provides no means to *secure* the channel lineup and neighborhood agreed upon with a program provider.

Digital cable operators using QAM combine streams together into multiplexes that are delivered within 6 MHz channels on specific frequencies, while IP-based systems associate content sources with IP addresses. MVPD guides and apps provide the technological means for assuring that these channels are presented on specific channel numbers and in specific locations within MVPDs' programming guides and protecting them from relocation, regardless of where

---

[209] 47 U.S.C. § 549(b).

[210] Chairman's Fact Sheet at 2.

[211] Chairman's Fact Sheet at 2.

[212] Remarks of Chairman Wheeler, Press Conference following February 2016 Open Meeting (Feb. 18, 2016), archived webcast available at https://www.fcc.gov/news-events/events/2016/02/february-2016-open-commission-meeting.

they might physically reside on the network. MVPD apps and user interfaces operate as technological protection measures for securing copyrighted content. Congress authorized such protection measures in the Digital Millennium Copyright Act (DMCA) as essential for securing copyrighted content for an age of instant global digital infringements. Conditional access and DRM systems can protect the MVPD app, but they do not convey or protect channel location when video information flows are decoupled from the guide or app.[213]

The NPRM envisions that MVPDs would disseminate information flows of instructions about the intended uses of programming and contemplates some undefined set of "robustness and compliance rules," but this provides no equivalent technical means for enforcing compliance. Without any authority to authorize circumvention of technological protection measures authorized by the DMCA, the FCC proposes to remove and entirely circumvent the MVPDs' technological protection measures when feeding new "competitive navigation" devices. It would require MVPDs to block the Information Flows to third-party Navigation Devices that do not voluntarily respect those instructions. But it fails to provide any tools that MVPDs might rely upon to ensure that channel location is respected. The DRM cannot secure channel location when decoupled from the guide or app. The NPRM would prohibit MVPDs from running code within the third-party device or app. The NPRM would bar business relationships between MVPDs and third-parties that could enforce channel-placement requirements through contract.[214] Nor is there any technical or practical means to monitor or enforce third-party compliance.[215]

---

[213] Technical White Paper at 20, 23.

[214] NPRM at ¶ 24.

[215] Technical White Paper at 21-24. The operational challenges associated with attempts to monitor the compliance of a potentially unknown and unbounded number of third-party Navigation Devices (that is, both devices and apps) would make it infeasible for MVPDs, and in particular smaller MVPDs, to ensure that channel-placement requirements are respected in all cases, at all times, by all models and versions of third-party Navigation Devices.

The FCC's set-top box mandate's weak content protection is reminiscent of the "FBI Warning" from analog VCR days. It conveys an unenforceable message to be on good behavior while streaming out naked information flows of all of the highest value digital video content carried by all MVPDs. MVPDs and content owners could only hope for the best from device manufacturers and apps developers over which MVPDs have no control, and who do not share the same incentives to preserve the chain of trust and have confirmed that they have no intention of complying with channel location, neighborhooding or other terms of licensing agreements that content owners carefully negotiated with MVPDs.

Neither hope nor litigation can replace technological protection measures. Under the FCC set-top box mandate, programmers, including the most vulnerable minority and independent programmers, would be left to individual copyright litigation against the world's largest tech companies and the most elusive offshore pirates, and MVPDs have their own copyrights stripped away and be left with no intellectual property rights at all.

B. Loss of Data Security

With the broad adoption of the Internet, the security threats to cable systems have expanded greatly.[216] Cybersecurity threats come from an array of sophisticated actors and nation states who seek to exploit vulnerabilities to steal information and money as well as seeking to disrupt, destroy or threaten the delivery of services. Cable systems have adopted technological protection measures, network segregation, security architectures and cybersecurity best practices in response. CableCARDs used with TiVo physically separate and protect the cable operators' internal networks from third party code. The app-based model provides for end-to-end security and has the built-in capability of responding to hacks and compromises by being compatible with

[216] Technical White Paper at 36.

the electronic counter measures (ECM) employed when a hack occurs.[217] Modern cybersecurity practices call for specific protections, but the NPRM abandons them all.

The NIST Cybersecurity Framework describes modern cybersecurity practices,[218] but the NPRM fails repeatedly to even acknowledge, let alone address, these requirements. The proposed set-top box mandate dismantles network segregation, security architectures and best practices, raises the threat level not just to pay TV content and networks but to the entire interconnected ecosystem, and locks the industry into a static solution that invites attack and exploitation. For example:

- The Framework calls for inventorying physical devices and software platforms to identify exposure, but the NPRM does not provide MVPDs with awareness of or visibility into connected devices.[219]

- The Framework calls for protection by managing the identity and credential for authorized devices and users.[220] But the NPRM dismantles today's cybersecurity best practice of managing systems at both ends of the connection and using "apps" for serving end point devices. It instead mandates exposing three one-way information flows with no means to authenticate and authorize access to these streams, potentially before any consumer has actually purchased the unaffiliated device or app.[221] Entitlement and VOD servers must be open for interaction with unaffiliated device manufacturers and app developers, enabling these third parties to see individual private information such as adult channels each viewer subscribes to and VOD titles that have been purchased and are therefore entitled and available for viewing. Such information is not even available to the FCC absent a court order, yet the Commission would force MVPDs to hand that information over to third-parties freely and without the customer's express consent. The NPRM would also permit third parties to reach network entitlement servers, billing, and local, regional and national content servers.

---

[217] Technical White Paper at 37.

[218] National Institute of Standards and Technology (NIST), *Framework for Improving Critical Infrastructure Cybersecurity*, Version 1.0 (Feb. 12, 2014), available at http://www.nist.gov/cyberframework/upload/cybersecurity-framework-021214.pdf ("NIST 2014"); Technical White Paper at 40-42.

[219] National Institute of Standards and Technology, NIST Special Publication 800-53 Rev 4 – "Security and Privacy Controls for Federal Information Systems and Organizations," at F-73 ("NIST 2013"); *see* Technical White Paper at 40.

[220] NIST 2014 at 23; NIST 2013 at F-7.

[221] *See* Technical White Paper at 40.

- The Framework calls for ensuring network integrity through the incorporation of network segregation by separating the publicly accessible system components from the internal organizational networks.[222] For example, in financial systems, financial information is kept on one network that is completely unconnected to the Internet and access to the Internet is kept on its own network; and these networks don't cross.[223] The same concepts are applied by engineers when engineering cable networks for cable systems. But the NPRM ignores network segregation and invites broad attacks on exposed back-end MVPD servers (entitlement, content, services). This opens the network to the same kind of hacks that enabled the widely-reported takeover of a 2015 Jeep Grand Cherokee through its connected entertainment system and the takeover of radio stations through their Internet simulcast by hackers' sexually explicit podcasts.[224]

- The Framework calls for integrity checking mechanisms to verify software and firmware.[225] But the proposed self-certification approach and one-way nature of the information flows do not provide any means to safeguard against compromised software from getting loaded on to the end-devices.[226]

- The Framework calls for continuous monitoring to detect anomalies, malicious code, and cybersecurity events.[227] But the NPRM's three one-way information flows do not include any telemetry data from the end-devices that can be used for monitoring.[228]

- The Framework calls for the ability to retrieve data from breached devices as part of assessment, countermeasures and recovery to normal operations, but the NPRM provides no technical, contractual, or legal tools for retrieval, response, or rapid adaptation. The use of an open standards body to address cybersecurity threats is counter to the core tenets of the Framework. Building consensus in open standards bodies takes years for agreement and yet more time to be implemented across an open ecosystem. The transition to the more secure IPv6 standard, for example, took over six years, and its implementation and adoption is still ongoing almost 20 years later. The NPRM would make security brittle and

[222] NIST 2014 at 24; NIST 2013 at F-188.

[223] Keith Stouffer, Joe Falco, and Karen Scarfone, NIST Special Publication 800-82 – "Guide to Industrial Control Systems (ICS) Security," 2015.

[224] Technical White Paper at 40-41.

[225] NIST 2014 at 26; NIST 2013 at F-225.

[226] Technical White Paper at 41.

[227] NIST 2014 at 30.

[228] Technical White Paper at 41.

susceptible to repeated breaches when vulnerabilities are discovered and disclosed.[229]

The FCC would dismantle MVPDs' network segregation and open access to unauthorized devices and users. Because the retail devices are "connected" devices, and because FCC proposal dismantles all the network segregation, security architectures and best practices, it raises the threat level not just to pay TV content and networks but to the entire interconnected ecosystem. The NIST Framework encourages flexibility and continuous improvement as a means to implement strong cybersecurity defenses against constantly changing cyber threats. The FCC's instead proposal locks the industry into a static solution contrary to the NIST Cybersecurity Framework that invites attack and exploitation.

C. Increased Supply Chain Risks

Part of any comprehensive cybersecurity risk management strategy is the securing of the supply chain.[230] In 2016, the Communications Security Reliability and Interoperability Council (CSRIC), an advisory committee to the FCC, adopted a report with recommendations for how communications sector members should use NIST security-by-design best practices in working with vendors and suppliers to reduce cybersecurity risk with the core network.[231]

---

[229] *Id.* at 42.

[230] NIST 2014 at 21; Technical White Paper at 42.

[231] Communications Security, Reliability and Interoperability Council, Secure Hardware and Software: Security-By-Design Working Group 6 – Final Report: "Best Practices for Hardware and Software Critical to the Security of the Core Communications Network" (2016); Technical White Paper at 42. In 2012, the House Intelligence Committee released its report on the national security issues posed by Huawei and ZTE. The report strongly encouraged US telecommunications companies to consider long-term security risks and to control their supply chains. "The threat posed to U.S. national-security interests by vulnerabilities in the telecommunications supply chain is an increasing priority given: the country's reliance on interdependent critical infrastructure systems; the range of threats these systems face; the rise in cyber espionage; and the growing dependence all consumers have on a small group of equipment providers." House Permanent Select Committee on Intelligence, Investigative Report on the U.S. National Security Issues Posed by Chinese Telecommunications Companies Huawei and ZTE (Oct. 8, 2012), available at https://intelligence.house.gov/sites/intelligence.house.gov/files/documents/Huawei-ZTE%20Investigative%20Report%20%28FINAL%29.pdf. The White House also stated its goal to foster a resilient supply chain. *See* National Strategy for Global Supply Chain Security (Jan. 2012), available at https://www.whitehouse.gov/sites/default/files/national_strategy_for_global_supply_chain_security.pdf. The

Supply chain risk management is supposed to address security early-on in the life-cycle development process and not as an afterthought. The NPRM would undermine this priority. It does not provide any tools for mitigating supply chain risk from third-parties who may attach to the network. It would not permit an MVPD to conduct its own certification testing of devices or apps.

It treats security as disconnected from supply chains, so that the device is either authorized or not authorized and the only action the MVPD can take is to turn off a device it may by chance detect and leave the consumer without a usable device or the provider's service.

D. Lack of User Authentication Opens Service to Rampant Fraud

The NPRM fails to provide for user authentication. In order for a device to be associated with a subscriber's account (so that the device can enforce the entitlements for that subscriber), the user must be securely authenticated on each specific device by providing credentials via a secure means. MVPD-provided equipment includes credentials that identify it and are known by the MVPD, and may also feature a PIN for parental control or purchase authorization. On retail devices, the MVPD app manages secure user authentication, association with a subscriber's account, and can access the device credentials to establish the association.

The FCC set-top mandate requires no controls regarding entitlements information on the retail device side of the MVPD interface. The entitlements information flow may be accessed by

---

Department of Homeland Security has issued key cybersecurity questions for CEOs, including supply chain management. *See* DHS, Cybersecurity Questions for CEOs, available at https://www.us-cert.gov/sites/default/files/publications/DHS-Cybersecurity-Questions-for-CEOs.pdf (last visited Apr. 21, 2016). *See also* Communications Security, Reliability and Interoperability Council, Cybersecurity Risk Management and Best Practice Working Group 4 – Final Report (2015); NIST, Best Practices in Cyber Supply Chain Risk Management: Supply Chain Best Practices (2015), available at http://www.nist.gov/itl/csd/upload/Workshop-Brief-on-Cyber-Supply-Chain-Best-Practices.pdf; Telecommunications Industry Association (TIA), Securing the Network: Cybersecurity Recommendations for Critical Infrastructure and the Global Supply Chain (last visited Apr. 19, 2016), http://www.tiaonline.org/sites/default/files/pages/TIACybersecurityWhitePaper_0.pdf.

anyone on the Internet, including foreign hackers. The NPRM precludes any MVPD agreement, license, testing, or certification that could require user authentication. It does not propose that a retail device must include or electronically produce a unique trustworthy certificate attesting to the validity and identity of the device. This poses a significant risk of compromise, content theft, and device "cloning," opening up all MVPD services to rampant theft.[232]

E. The Proposed Mandate Would Radically Constrain MVPD Choice (and Use) of Essential Security

The NPRM promises not to interfere with an MVPD's right to select its preferred security system to prevent theft and misuse, and not to impede the introduction of new content protection systems.[233] But the NPRM's actual proposal fails both of these promises. The DRM systems used today by MVPDs – which include Microsoft PlayReady, Apple FairPlay, Adobe Primetime, SecureMedia, Nagra, and NDS VideoGuard Connect – are sold as a service and as part of a larger security trust infrastructure, rather than being available on a RAND basis. However, under the FCC's proposal, the only security allowed for the content being streamed to the third-party box or app is one that is commercially available on RAND terms.[234] DTCP is a proprietary system, not "standard" as characterized in the NPRM. The limitations of DTCP – including its failure to support current and future programming offers, its slowness to update and its lack of support for cloud delivery – are summarized in the DSTAC WG4 Report.[235]

---

[232] Technical White Paper at 13-14.

[233] *See* NPRM at 58.

[234] Technical White Paper at 34.

[235] *See* DSTAC Final Report at 282-83, 293 (DSTAC WG4 at 147-48, 158); NCTA DSTAC Comments, MB Docket No. 15-64 (Oct. 8, 2015) at 25 ("NCTA DSTAC Comments"); NCTA DSTAC Reply Comments, MB Docket No. 15-64 (Nov. 9, 2015) at 27, 28-29, 35-36 ("NCTA DSTAC Reply Comments"); Letter from Rick Chessen, Sr. V.P. Law and Regulatory Policy, NCTA, to Marlene H. Dortch, Secretary, FCC, MB Docket No. 15-64 (Jan. 15, 2016) at 2-3 ("NCTA Jan. 15, 2016 *Ex Parte*"). *See also* discussion at Page 128.

Apart from being prohibited from using the market leaders in security, MVPDs would also be constrained from choosing new security solutions. Under the third of the so-called "parity" requirements proposed by the NPRM, an MVPD could not use a next-generation security solution that supports new business offerings unless it can be matched by that commercially-available security solution on RAND terms for the three information flows.[236] The proposed approach would limit the permissible security solutions and dumb down all the permissible offerings in apps and over the distribution system, not just offerings to the new retail boxes. This mandate would be the equivalent of telling Apple that it could not offer a new service protected by FairPlay because FairPlay is not available on RAND terms and the government-anointed security system has not yet caught up.[237]

The FCC's set-top box mandate would create the widest single point of attack and weakest link for all security for all MVPD networks and content. By contrast, industry security requirements recognize that when technologies are evolving and advancing at a rapid pace, so should the technologies that protect and secure the networks and content.[238]

---

[236] NPRM at ¶ 63. The third parity proposal is that "on any device on which an MVPD makes available an application to access its programming, it must support at least one Compliant Security System that offers access to the same Navigable Services with the same rights to use those Navigable Services as the MVPD affords to its own application."

[237] In prior orders, the FCC has specifically declined to specify the licensing model – RAND, non-assert, or otherwise – that is appropriate for content protection. *Basic Service Tier Encryption*, Report and Order, MB Docket No. 11-169, 27 FCC Rcd 12786 ¶ 24 (2012) ("Basic Service Tier Encryption Order") ("In adopting this 'good faith' licensing requirement, we intentionally do not specify any particular technology or technology licensing model (e.g., we do not require or specify 'fair, reasonable, and non-discriminatory' licensing, as that term has been interpreted in other contexts, as urged by Boxee and CEA)."); *Digital Output Protection Technology and Recording Method Certifications*, Order, MB Docket Nos. 04-55 to 04-66; 04-68, 19 FCC Rcd 15876 at ¶ 91 (2004) ("With respect to the potential for certain license terms to serve as ancillary restraints on competition and technical innovation, the record in this proceeding does not support the Commission's adoption of one approach to intellectual property licensing over another.").

[238] The MovieLabs Specification for Enhanced Content Protection describes a set of multiple specifications to improve security in a developing environment. Motion Picture Laboratories, Inc., MovieLabs Specification for Enhanced Content Protection – Version 1.1 (Feb. 2015), *available at* http://www.movielabs.com/ngvideo/MovieLabs%20Specification%20for%20Enhanced%20Content %20Protection%20v1.1.pdf.

F. Programming Keys Would be Exposed to Concentrated Attack

Even with commercially available DRM today, companies keep the key server inside the company firewall to protect against attack. The NPRM would require all MVPDs to adopt a uniform (or very small set of RAND-based security) and then turn the key server over to a third party, literally turning over the keys to all of the highest value digital video content carried by all MVPDs to a concentrated point of attack.

The "one-way" interfaces proposed in the NPRM for the information streams exposes the entitlement information to any and all, including bad actors who could clone the retail devices, modify authorized content entitlements, or insert themselves between two parties in communication and impersonates both sides of the exchange. Even if the entitlements stream were protected by a public-private keying system as proposed in the NPRM, there would be no safeguards within the retail device for the key once it was decrypted.[239]

G. The Proposed Mandate Would Open Door to More Piracy and Malware

Advocates of the NPRM proposal tout consumer interest in integrated search results that combine MVPD guide and VOD library information with program listings of other providers. This ability is already possible on retail devices such as Roku that display MVPD apps, and will become more widely available on MVPD and retail devices in response to consumer demand. But content owners have an interest in assuring that cross-platform searches are not used to facilitate and promote piracy. Today, many programming licenses restrict MVPD leased devices and apps (and thereby UDCP devices) from displaying licensed programming alongside pirated content in the channel guide and in search results, the way that a Google search so often does.

[239] Technical White Paper at V.D. and E.

Rather than securing an ecosystem for the protected delivery of licensed commercial content, the NPRM will actually facilitate and help to perpetuate the illegal distribution of protected content. For example, the Kodi application that runs on retail streaming devices (e.g., Amazon Fire, Roku, and Google Chromecast) was designed to allowed users to stream content from their home servers to their TVs, but also supports third-party plugins. The plug-in interface has been leveraged by third-party developers to enable the distribution of pirated content.[240]

But the NPRM proposal contains no restriction on displaying licensed programming alongside pirated content, and this critical omission has alarmed content owners, who are concerned that the FCC's proposal would appear to legitimize and fuel access to pirated content. For example, Gale Anne Hurd, producer of films and television shows including the Terminator trilogy, Aliens, Armageddon and The Walking Dead, recently opined in a national op-ed that the FCC's NPRM proposal would be a "disaster" for the millions of people employed and benefitted by the creation of creative content:

> If the Federal Communications Commission (FCC) approves [the NPRM's] regulatory proposal to "open" set-top boxes, it will make piracy as easy and dangerous in the living room as it is on laptop and mobile devices. … The Season 5 premiere of my show *The Walking Dead* was illegally downloaded by roughly 1.27 million unique IP addresses worldwide within 24 hours of its debut. If we can agree that piracy on that scale is a serious problem, then let me explain why the FCC's proposal would spell disaster for those of us who are trying to figure out how to keep making the movies and TV shows audiences love. And I'm not talking about just the actors and the producers. Hundreds of thousands of crewmembers across the country will be out of jobs, too. Studios and networks can't keep making content if they stop receiving revenue from legitimate sources. …
>
> [S]earch engines such as Google and digital video platforms such as YouTube routinely show — and prioritize — stolen content in search results. [The FCC's proposal] would also allow Google — and for that matter set-top box manufacturers from all over the world, including China (where rogue boxes are

[240] Technical White Paper at V.E.

> being built by the millions) — to create and market applications or boxes with software that will treat legitimate and stolen material exactly the same, and could in many cases help steer consumers to piracy. This is a real threat. Google's search engine does this today. … While you might not think the placement of pirate and legitimate sites matters in search results like this, a recent experiment showed that users are more likely to purchase legally when legal sites are prioritized over pirate sites — and they're more likely to pirate when pirate links are promoted. Chairman Wheeler's set-top box proposal places no restrictions on search results. If approved, it would allow device-makers to prominently display pirated content from the Internet alongside legitimate options — just like in my "watch *Fear the Walking Dead*" Google search. Imagine Madison Square Garden being forced to open its doors to allow street vendors to sell fake and knockoff New York Knicks merchandise alongside the legitimate items in the stadium stores. Think of the advantages the street vendors would enjoy by not paying to license the goods they were selling. So why would the federal government want to reward Google and rogue set-top box manufacturers with rules that will put stolen content in competition with legitimate content on TV sets across America?[241]

Ms. Hurd therefore concluded that the "FCC should reject this new AllVid proposal and help prevent piracy from becoming as prevalent in the living room as it is on laptop and mobile devices."[242]

One observer noted "justifiable bewilderment in the creative community" over the NPRM's proposals and warned that search engines can have a profound role in influencing consumers to access pirated content; recent studies found that 74% of consumers say they used a search engine when they first viewed pirated content, and that "the more prominently pirated content appears in search results, the more likely consumers are to choose it."[243] Worse, the report showed how Google was encouraging unsuspecting consumers to engage in piracy:

> [A]fter Google Now determined that [the affected user] had "shown an interest" in the movie "Deadpool," it proactively delivered a link to [download a pirated

---

[241] Gale Anne Hurd, *Feds Unleashing Piracy Apocalypse: 'Walking Dead' Producer*, USA TODAY (Apr. 12, 2016), http://www.usatoday.com/story/opinion/2016/04/12/fcc-set-top-box-proposal-cable-internet-piracy-walking-dead-zombies-gale-hurd-column/82919704/.

[242] *Id*.

[243] Lee, *supra* note 100.

> copy of Deadpool from] one of the largest torrent sites in the world, 1337x …. Google's algorithm unilaterally [encouraged the consumer to] access stolen content—*without any action on his part*. The FCC's proposal would only increase the likelihood that Google continues to engage in such irresponsible conduct.[244]

The FCC's proposal would not only facilitate piracy, but would in the process inadvertently create a new windfall opportunity for purveyors of malware that steals consumers' credit card information, passwords and other data and hijacks their devices into botnets to send spam and viruses and participate in denial-of-service attacks. These distributors insert malware directly into equipment or use the lure of "free" access to pirated high-value content to bait consumers into accessing their servers where they are exposed to the malware.[245] The FCC proposal would enable these cyber criminals to better disguise their apps by ingesting MVPD content that would give consumers the appearance of legitimacy. The apps could then return pirated content in search returns right next to the show a consumer is looking for, just as a Google or YouTube search does today.

A recent study by Digital Citizen's Alliance estimates that sites trafficking in pirated content collect $70 million per year for installing malware.[246] The FCC's proposal would enable these parties to add free cable content as deceptive bait for their pirate sites, to the detriment of consumers. By contrast, consumers would better protected if the FCC's rules were geared to retail access to secure MVPD apps, rather than disaggregated MVPD content that can be manipulated for such deceptive purposes.

***

---

[244] *Id.*

[245] Technical White Paper at V.C.

[246] Ted Johnson, *Piracy Sites Collect $70 Million a Year by Installing Malware (Study)*, VARIETY (Dec. 9, 2015), http://variety.com/2015/biz/news/piracy-malware-digital-citizens-alliance-1201657845/.

The Commission's arbitrary indifference to the robust security infrastructure used to protect and distribute commercial content and its extraordinary rush to judgment, would leave the security ecosystem a far cry from the simplified diagram the FCC presents as a retail set-top box under the NPRM. Some of the key omissions missing in the Commission's diagram are illustrated in Figure 3 below:

Figure 3: FCC Omissions of Security Functions of Set-Top Boxes

FCC Blocks Defenses Against:

× Hacking
× Exposing channel subscriptions
× Exposing movie titles purchased
× Government access to personal viewing history
× Access to billing
× Denial of Service attacks

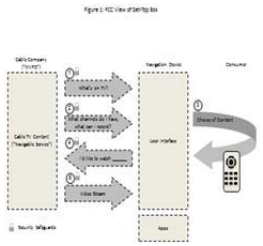

FCC Limits Security for Information Streams:

- DRM sold as service not permitted
- MVPD not permitted to require license
- Certification testing by MVPD or affiliate not permitted

FCC Omits NIST/CSRIC Cybersecurity Protection for:

× Inventorying physical and software exposure
× Authentication and authorization of access
× Network segregation
× Integrity checking mechanisms
× Detecting anomalies and malicious code
× Retrieving data from breached devices for response
× Recovery to normal operations
× Supply chain risk management

FCC Eliminates Security Ecosystem for:

× Licensing Structure
- Device maker not responsible for license compliance
- Device maker not responsible to content owners, television advertisers or licensed distributors
- Device maker may promote pirate content
- Missing: breach resolution, liability, warranty, content restrictions respecting authorized distribution, device approval, differentiated outputs, differentiated resolutions, and specific security requirements

× Security Structure
- No chip qualifiers or box qualifiers responsible for meeting MVPD and content requirements
- Secure key provisioning
- Key servers protected by MVPD firewalls
- Chain of trust

× Payments
- Device service pays zero to content creators and providers
- Device advertising pays zero for content attracting the audience

× Responsibility
- Device makers not responsible for compromises that result in theft of content
- Device maker not responsible to MVPD for breach resolution
- App maker not responsible for accessibility
- No audit that advertising ran as contracted
- Device maker not auditable for privacy and other compliance
- Remedy for device maker's privacy violation is to turn off the box and punish the consumer

The proposed set-top box mandate would jeopardize content and system security and sabotage anti-theft and anti-piracy efforts across the ecosystem. This is contrary to the express command of Section 629, to the promises made by Chairman Wheeler, and to the *unanimous* recommendations of DSTAC.[247]

VIII. THE PROPOSED MANDATE WOULD REDUCE CHOICE, INNOVATION AND COMPETITION

A. Tech Mandates Chill Innovation in Rapidly-Evolving Technologies

In adopting Section 629, Congress instructed the FCC to "avoid actions which could have the effect of freezing or chilling the development of new technologies and services."[248] The DSTAC Report notes the considerable economic and academic literature documenting that the risks of government-induced market failure and the costs to innovation are particularly high when the government intervenes in new markets that are rapidly evolving – such as we have in the rapidly evolving and converging communications, media, and IT industries today. [249] Economists often warn about the hazards of premature standardization in rapidly evolving technology spaces. Premature government standardization limits firms' ability to invest in new technological approaches; reduces competition, experimentation, and creativity; limits options for consumers; and risks locking consumers into obsolete products.[250] NCTA has previously

---

[247] *See* DSTAC Final Report at 2-3 (DSTAC Summary at 2-3) (The full committee agreed that "downloaded security components need to remain in the control of the MVPD," that "[i]t should not be necessary to disturb the potentially multiple present and future CA/DRM[2] system choices made by cable, DBS and IPTV systems," and that it is "unreasonable to expect that MVPDs will modify their access networks to converge on a single common security solution.").

[248] H.R. Rep. No. 104-458, at 181 (1996) (Conf. Rep.), *reprinted in* 1996 U.S.C.C.A.N. 124, 194.

[249] DSTAC Final Report at 299 (DSTAC WG4 at 164).

[250] Paul A. David, *Some New Standards for the Economics of Standardization in the Information Age, in* Economic Policy and Technological Performance (Partha Dasgupta & Paul Stoneman, eds., Cambridge Univ. Press, 1987) at 210, 234 ("The second is a dilemma posed by the realization that governmental agencies are likely to have greatest power to influence the future trajectories of network technologies, just when a suitable informational basis on which to make socially optimal choices among alternatives is most lacking."; "[P]remature reductions of gateway costs may exact unforeseen economic penalties by discouraging investment in R&D programmes aimed at establishing

provided the Commission with a detailed study of the video devices market by respected economists which explains this very phenomenon in the video space.[251]

Public comments in DSTAC meetings made the same point: a representative for the security expert Verimatrix, for example, cautioned that "there is no one size fits all solution" in part because "if you standardize too much that damages security" by losing diversity, and that "if you also standardize prematurely it can stifle innovation."[252] In other contexts, even Amazon, a proponent of the NPRM's approach, has agreed: "Many media and entertainment commenters have celebrated our current time as the new 'golden age of television.' … [H]owever, the

---

the technological dominance of one system over its rivals."); Michael Katz & Carl Shapiro, *Systems Competition and Network Effects*, J. Econ. Perspectives, Vol. 8, No. 2, Spring 1994, at 113 ("[E]ven if policy-makers try to maximize total surplus, they may lack the information needed to do so. In the case of choosing a standard at the start of the product's life, it may be very difficult to determine which standard is the 'correct' one. Moreover, the government may have a significant informational disadvantage relative to private parties when emerging technologies are involved."); *id.* at 95 ("Although compatibility has obvious benefits, obtaining and maintaining compatibility often involves a sacrifice in terms of product variety or restraints on innovation."); Stanley Besen & Leland Johnson, *Compatibility Standards, Competition, and Innovation in the Broadcasting Industry*, Rand, Prepared for the National Science Found., Nov. 1986, at ix ("*Formal standard setting, either by government or by private parties, should be avoided during the time that the technologies in question are rapidly changing.*") (italics in original)*;* Carl Shapiro, *Setting Compatibility Standards: Cooperation or Collusion? in* Expanding the Boundaries of Intellectual Property (Rochelle Dreyfuss, Diane Zimmerman, & Harry First, eds., Oxford Univ. Press, 2001) at 88 ("The need to adhere to a standard imposes limits on firms' product design choices. Unlike the first two effects of standardization, this effect is a cost. Limits on design choices can lead to static losses from the reduction in variety. And they can lead to dynamic losses as firms are foreclosed from certain paths of R&D that could result in innovative new products that could not comply with the standards. Note that these limits impose costs both at the time a new product is created, and later when it is possible to introduce a new generation offering greatly enhanced performance."); Joseph Farrell & Garth Saloner, *Converters, Compatibility, and the Control of Interfaces*, J. Industrial Econ., Vol. 40, No. 1, Mar. 1992, at 9-10 ("But standardization has its costs. First, it may retard innovation. Second, the process of standardization may itself be costly.… Third – the problem addressed in this paper – since standardization typically constrains product design, it may limit product variety."); Richard Gilbert, *Symposium on Compatibility: Incentives and Market Structure*, J. Industrial Econ., Vol. 40, No. 1, Mar. 1992, at 2 ("One way to ensure compatibility is to require firms to produce products that conform to set standards. This is, however, a potentially costly requirement. Standards limit flexibility to offer products with specialized characteristics (standards limit product variety) and may constrain technological progress by limiting firms to suboptimal designs.").

[251] *See* Michael G. Baumann & John M. Gale, Economic Analysis of the Regulation of MVPD Navigation Devices (2010) (submitted with Letter from Neal M. Goldberg, Vice President and General Counsel, National Cable & Telecommunications Association, to Marlene H. Dortch, Secretary, FCC, MB Docket No. 10-91; CS Docket No. 97-80; PP Docket No. 00-67 (July 19, 2010)) ("Baumann & Gale Economic Analysis").

[252] Transcript of DSTAC Aug. 4, 2015 meeting at 257.

concept of 'television' is still evolving, largely through the influence of online platforms. For that reason, the Commission should be cautious about impeding future innovation."[253]

When the Commission even starts to consider technology mandates, it induces market participants to expend their resources on government advocacy, rather than on innovation and commercial negotiations. This NPRM is reproducing the same mistake. By contrast, apps that respond to actual market demand and leverage the technology tools developed in iOS, Android, and web-based technologies have created consumer choice, competition and rapid innovation in MVPD and OVD services and in retail devices.

B. The Proposed Mandate Would Remove the Innovative Features of Today's Cable Service

Proponents of the FCC set-top box mandate often invoke static black rotary telephones as a supposed analogy to today's set-top boxes, but in fact innovations by cable, satellite, IPTV and online distributors have produced continuous innovation in multichannel networks and service and in the equipment used to receive that service. DISH launched its commercial DVR in 1999. Cablevision was the path breaker in cloud DVR. Comcast won an Emmy for its X-1 platform. DIRECTV added live highlights, scores, statistics, standings, and schedules for all major sports, fantasy leagues, and the ability to share shows on Facebook and Twitter. AT&T developed U-Verse with instant channel change. Time Warner Cable developed apps to deliver its service on nine retail device platforms. Comcast is developing an HTML5 app to utilize the most modern technologies developed by the international W3C community for media streaming. And all MVPDs license or create new content and features by which they differentiate themselves. Apps deliver these distinctive offerings to retail devices, and the competition redounds to the benefit of

[253] Reply Comments of Amazon.com, Inc., MB Docket No. 14-261 (Apr. 1, 2015) at 8.

consumers. Each innovation by one provider spurs competitive responses by others in the market.[254]

Today cable service comprises "a complex interaction of licensed content, a variety of networks, different security and content protection measures, hardware, software, licensed metadata, diagnostics, application data synchronized with content, interactivity, user interfaces, advertising, ad reporting, audit paths, and more."[255] Cable service is not just turning requested channels on and off anymore, but the FCC set-top mandate would make it so by stripping out innovative interactive MVPD service features.

C. The Proposed Mandate Would Limit Future MVPD Service Offerings

The set-top box mandate would inhibit MVPDs from enhancing their service, not only for retail box users, but also for all customers. Today, Netflix, Google's YouTube, Amazon, MVPDs and any other online video provider can update and enhance their apps and services through a click of its app. Tomorrow, under the NPRM, MVPDs would often find that desired enhancements could not pass through the FCC's limited interfaces. Even if it could, it has to depend on the third party device manufacturer to write and update the apps for the retail boxes. In contrast, OVDs could continue updating their service with an app refresh and a consumer click.[256]

But the constraint on innovation is not limited to retail devices. Innovation would also be curtailed on the MVPDs' distribution platforms, and in their own devices and apps. Chairman Wheeler has promised that the FCC's proposal would not change the ability of an MVPD to

---

[254] DSTAC Final Report at 300 (DSTAC WG4 at 165).

[255] DSTAC Final Repot at 37 (DSTAC WG2 at 10).

[256] Technology White Paper at 29-30.

package or price its services. But that is not what the NPRM proposes. Under the FCC's set-top box mandate:

- An MVPD could not launch a cloud-based service to one retail device unless it created a solution for all devices and all third party app developers – imposing a huge hurdle for the deployment of more boxless solutions by MVPDs.[257]

- A content provider could not experiment with a new offering on just one platform. Suppose a studio wanted to trial a new offer with one MVPD: buy two Star Wars movies and complete the trilogy at a discount. If it offers content to an MVPD on any device, the second of the NPRM's proposed parity rules would require the MVPD to extend "non-discriminatory" rights to all devices and third party app developers.[258]

- An MVPD would also be constrained from making any new consumer offering that cannot be replicated in every retail box. Suppose it is willing to sell video by the 50 or 100 hours of viewing, and can track it through a new system. No two MVPD entitlement systems are the same (they change all the time with marketing), and there is no standard expressing this offer through the standardized entitlement interface. Bound by "parity," the MVPD could not offer anything more than is enabled through the standard entitlement stream.[259]

The NPRM says that it would give MVPDs "the opportunity to seek and adopt standards in Open Standards Bodies." This means MVPDs (but not OVDs) must go to the standards body for a change in standard (typically requiring years of work, and consensus among the members of the standards body), or to the FCC for waivers (which have taken years under the FCC's last

[257] Technology White Paper at 33.

[258] Technology White Paper at 31.

[259] Technology White Paper at 31, 34.

set-top box mandate). MVPDs would have to lay out in public their proposed innovative offer, and let others steal the idea and beat them to market while the standards body or FCC considers it. This is not a recipe for innovation, competition or a level playing field.[260]

D. The Proposed Mandate Would Limit Future Technology Innovations

The proposed set-top box mandate would also constrain innovation in new technology. The proposed parity rules would restrict network migration to ISO media formats, HEVC, and new DRM systems, until the "standard" can be made to a co-equal least common denominator.[261] It would also compromise the migration to IP. That transition requires graceful migration to "multicast," where customers watching the same show can be in the same stream. But IP multicast has not been standardized across the industry and is a dynamic area of innovation. The FCC's proposal insists on standardizing *now* for its three interfaces, which probably means that if an MVPD adopts IP multicast now, it would need to simulcast two different forms of IP multicast—one for the FCC set-top box mandatory interfaces, and one for the rest of the network so that it can keep evolving and not be stuck in a frozen standard dictated by FCC rule.[262]

E. The Proposed Mandate Would Isolate U.S. MVPDs from Global Development

The NPRM's proposal would deprive MVPD subscribers of the benefits of the global market movement to apps and HTML5, and isolate MVPDs from the apps and HTML5 environment that has been adopted by worldwide TV standards groups, standards groups in the US, Europe, Japan and Korea, and smart TVs and other CE devices as a platform for TV

[260] Technology White Paper at 31.

[261] Technology White Paper at 31-32.

[262] Technology White Paper at 35-36.

applications.[263] The Web Application Video Ecosystem (WAVE) program, designed to bring even more performance to HTML5 streaming media apps reconfirms that unified global approaches are now vital in the increasingly international market.[264] This environment has enabled cable operators to emerge from their isolated development environment that had previously handicapped innovation, and to adopt and deploy agile development platforms using the same development tools, same pool of developers, same content protection techniques and same IP technologies as OVDs. Cable operators' cloud/app/HTML tools and development teams are now orders of magnitude faster, cheaper, and more innovative in upgrading cable service and expanding its reach to more devices.[265]

Dictating a one-off U.S. government set-top box mandate would overturn this progress and isolate the U.S. video distribution market from the rest of the world, and leave the U.S. behind in the global migration to video solutions based on HTML5, DRM, and apps. The FCC's set-top box mandate would isolate and slow innovation by U.S. MVPDs – but not OVDs. Even if U.S. MVPDs are not prohibited from deploying and supporting apps, the proposed mandate would divert the hours, dollars and other resources away from the development and enhancement of services and applications designed to keep up with fierce video competition that redounds to the benefit of consumers. MVPDs ought to have the same technology options as Netflix, YouTube, Amazon and other video providers without the burdens that the FCC's set-top box mandate would impose on them.

---

[263] *See supra* note 57.

[264] *See supra* note 58 and accompanying text.

[265] Technology White Paper at 54.

F. The Proposed Mandate Would Limit Future Programming

The unbundling mandate would also undermine the economic incentives that have led to the creation of new competitive video sources. Today, "cable" channels and other video programming is licensed for distribution by Amazon, Netflix, Hulu, Sony, Sling TV and more than 115 lawful online sources. Amazon, Netflix and Apple are producing even more original content, and Google Fiber has licensed content and built out competing networks to offer MVPD services. By bypassing licenses and treating all MVPD content as open source, the NPRM would undermine the legal framework and incentives that created this programming in the first place, and even the incentives for companies like Google Fiber to build their own networks.

G. The Proposed Mandate Would Undercut Network Management and Squander Bandwidth

By stripping out MVPD applications and code, the FCC set-top box mandate would also strip out critical network management of bandwidth. When a cable company delivers its services via app to a retail connected device, it can manage how many IP channels are open at the same time. This is important for conserving bandwidth for other uses, because, just like on the Internet, every channel opened is an individual ("unicast") channel even if many households are watching the same channel at the same time. With apps, the cable company can send pop-up alerts to ask "are you still watching?" and limit the number of channels that remain open (but unused) at the same time. Under the FCC set-top box mandate, there would be no way to manage streams or send a pop-up. Retail devices have zero incentive to conserve bandwidth—like unmetered water, only the cable company suffers the load. That load means less capacity for Internet broadband and other services.[266]

[266] Technology White Paper at 12-13, 35-36.

Because the FCC's proposal would undercut the tools of network management, it would provide no defense against the video equivalent of the peer-to-peer takeover of Internet bandwidth or a denial-of-service attack on video servers. Providing unaffiliated devices with *information about* the maximum number of simultaneous video streams that can be watched or recorded, as suggested in the NPRM, does not actually manage streams.[267]

H. CableCARD and Other FCC Mandates Have Been Expensive Failures that Restrained Innovation

The Commission's prior experiences with tech mandates should counsel for greater caution. Although the NPRM tries to claim FCC credit for introducing market innovation,[268] the record is plainly to the contrary. When the Commission has attempted to prescribe a government-mandated technology solution for video services, it has suffered expensive failures. The FCC tried to direct the technological future of digital television in 1998, adopting an ever-expanding set of rules to try to drive the course of all digital multichannel programming, with a standardized regulated CableCARD interface into the device and a regulated IEEE 1394 "FireWire" out. As chronicled in many prior NCTA filings, these detailed technical prescriptions were a flop, costing consumers billions of dollars and delaying innovation.[269]

The DSTAC Report reviews the impact of CableCARD on innovation: delays in the transition to all-digital and use of switched digital video; Verizon's need to build a redundant and slower method for delivering entitlements in FiOS; its incompatibility with modern video

---

[267] Technology White Paper at 33-34; 40-42.

[268] NPRM at ¶ 7.

[269] *See, e.g.*, Comments of NCTA, CS Docket No. 97-80; PP Docket No. 00-67 (June 14, 2010) at 3-7 (CableCARDs imposed a cost to consumers in excess of one billion dollars but used in very few retail devices); *id.* at 26-32 (describing the failure of the IEEE 1394 technology mandate, including being eclipsed in the market by other interfaces such as Ethernet and USB and imposing unnecessary costs for an unused interface).

delivery formats.[270] Cable operators expended enormous personnel and technical resources to support unidirectional CableCARD devices (UDCPs) after the CE industry insisted that consumers didn't care about interactive VOD services and would buy retail devices with just linear. Very few CableCARD devices were ever sold, but not for lack of support,[271] and not because they had no means for accessing two-way services.[272]

---

[270] *See* DSTAC Final Report at 285 (DSTAC WG4 at 150) ("Notwithstanding the limited successes of TiVo Series 3+, SiliconDust and Hauppauge devices, CableCARDs have been neither "upgradeable" nor conducive to innovation. As reported by WG2, the requirement to use CableCARDs in leased devices delayed cable operators' transition to all-digital and use of switched digital video. Verizon had to bolt on a redundant method for delivering entitlements to UDCPs using CableCARDs – using a slower carousel approach for which CableCARDs were designed rather than the instant entitlement designed for FiOS. Verizon also had to add additional EAS and OOB signaling just to address UDCPs using CableCARDs. FiOS IP services do not pass through the CableCARD. The CableCARD's limitation to 1995's MPEG-2 Transport Streams is incompatible with modern video delivery formats (*e.g.*, ISO Base Media File Format) used by competing video providers. Very limited innovation has occurred in CableCARD devices. For example, the CableCARD was changed to support multi-stream and SDV tuning adapters, but only with time consuming re-engineering and high cost. CE device manufacturers and MVPDs have innovated around the CableCARD to reach a wide variety of retail devices, with hundreds of new MVPD services, using the more widely adopted web- and app-based approach.").

[271] The NPRM summarily alleges as a reason for the underachievement that "cable operators generally offered poor CableCARD support." NPRM at ¶ 7. On the contrary, cable operators invested enormous resources in supporting CableCARDs, as evidenced in the timeline attached hereto as Appendix D. There were certainly some installation difficulties especially early on, many of them created by the UDCPs themselves from inadequate testing and manufacturer efforts to hide problems from the cable industry, from consumers, from the FCC and from each other. *See* Letter from Neal Goldberg, Vice President and General Counsel, NCTA to Marlene H. Dortch, Secretary, FCC, CS Docket 97-80 (Jun. 29, 2006), *available at* http://apps.fcc.gov/ecfs/document/view?id=6518382202. Anecdotes about CableCARD support have previously been submitted to the Commission, but on investigation, the end result has been that the customer's CableCARD was activated in their retail device. *See* NCTA Reply Comments, CS Docket No. 97-80; PP Docket No. 00-67 (Jun. 28, 2010) at 6-7 ("in each instance where we could find the final resolution, the customer had in fact successfully connected their CableCARDs to their TiVos to access cable within a few days."). The authors of the two articles cited by the NPRM for CableCARD woes also clearly were able to have CableCARDs successfully installed. There is no real evidence that there has ever been any sizable number of people who want to use a retail CableCARD device and have been unable to do so.

[272] The NPRM at ¶ 7 states that the agreement that implemented CableCARD licenses "did not prescribe methods for retail devices to access those interactive services," but this is simply wrong. The MOU *did* prescribe method for interactive services—using apps. TiVo's use of its own program guide was designed as a transitional measure for one-way devices, not as a model for advanced devices. The major consumer electronics manufacturers – including Sony, Samsung, Panasonic, and LG – agreed that *two-way interactive* retail CableCARD devices would present the full cable service using an MVPD app and more comprehensive licensing arrangements. The apps-based solution for interactive cable was originally based a common middleware, like Java but evolved to use multiple apps written to the multiple apps platforms like iOS and Android. Linear channels unbundled from the cable user interface were a necessity, not a feature, until the apps platforms were developed. "The CableCARD/UDCP model adopted more than a decade ago was designed only for reception of one-way linear cable channels from digital cable systems, and required retail CableCARD devices to use their own guides. This approach reflected basic technical limitations at the time – a one-way device could not support interactive services or the cable program guide, and suitable remote user interface technology did not exist. The resulting devices met with very little consumer acceptance. … From the

The ill-effects of misguided regulations endure long after their adoption, derailing innovation in their wake. The mandated inclusion of costly IEEE 1394 outputs on cable boxes continued for years even after HDMI won out in the marketplace. The Commission took two years to grant waivers from its integration ban and encoding rules for early-release theatrical content; well over a year to authorize the DTAs essential for cable's digital transition; and well over a year to deny a waiver that NCTA requested to provide a testbed for downloadable security. Later, the lengthy waiver process also delayed deployments of downloadable security under waivers that were finally granted to two operators.

In defending the integration ban in 2005, the Commission said, "We do not take lightly the imposition of additional costs on consumers" but "it seems likely that the potential savings to consumers from greater choice among navigation devices will offset some of the costs."[273] Cable operators paid over $1 billion and wasted over 600 million kilowatt hours of energy ($60 million in residential electric bills) annually on the integration ban, and that technology mandate failed famously and expensively for nearly a decade before it was repealed by Congress. As DSTAC reported, "Had the FCC adopted the 'AllVid' rules, the distributor and programming

---

outset, the presence of a third-party program guide on UDCPs was designed to be transitional. By the terms of the MOU and the FCC's implementing rules, UDCPs were designed as one-way devices. As they transitioned to interactive devices, they were to present the full cable service using an apps-like approach running on common middleware, not on protocols." DSTAC Final Report at 284-85 (DSTAC WG4 at 149-50). *See also Implementation of Section 304 of the Telecommunications Act of 1996: Commercial Availability of Navigation Devices*, Further Notice of Proposed Rulemaking, CS Docket No. 97-80, 18 FCC Rcd 518, 548 (Appendix B) (2003) ("for Advanced Interactive (two-way) Digital Cable Products … Cable operators' EPG will be provided for advanced interactive digital cable products via OCAP or its successor technology."). Thus, the NPRM is also mistaken in claiming (in ¶ 11) that CableCARD separated parts of the cable architecture into separate units. From the outset, MSO code was expected to be running on a predictable platform inside the CableCARD device.

[273] *Implementation of Section 304 of the Telecommunications Act of 1996: Commercial Availability of Navigation Devices*, Second Report and Order, CS Docket No. 97-80, 20 FCC Rcd 6794 ¶ 29 (2005).

industries could not have developed today's amazing market that provides MVPD programming to smartphones, tablets and other devices embraced by consumers."[274]

The Commission has also tried and failed twice with a common carrier model for video. The FCC 1990's construct for "video dial tone" separated distribution from video management. The "open video system" successor tried the same approach for two-thirds of network capacity. Both models failed after waste of considerable resources, and Congress explicitly blamed the failure on the passive common carrier regime that the Commission imposed upon it.[275]

Online video providers have tried unbundling video service and stopped. Netflix[276] and YouTube[277] specifically withdrew public APIs after third parties did not present the service with all the ads and features intact. Google explained that third parties should not be able to block ads

---

[274] DSTAC Final Report at 298 (DSTAC WG4 at 163). Apps tailored to iOS, Android, and other retail platforms, apps delivered wirelessly from the cloud, and apps delivered through the variety of home networking techniques used today do not route themselves through a standardized AllVid adapter or deliver service using a uniform set of protocols, as would have been required by the 2010 AllVid proposal.

[275] *See* S. Rep. 104-230 at 179 (1996) ("Those rules implemented a rigid common carrier regime, including the Commission's customer premises equipment and Computer III rules, and thereby created substantial obstacles to the actual operation of open video systems."). Open Video Systems were the next installment, with the same premise, and failed to do any better. It is generally recognized to be "a flop." *See* M. Botein, *Open Video Systems: Too Much Regulation Too Late?*, 58 FED. COMM. L.J. 439 (2006).

[276] As discussed in Section IV. I., Netflix has discontinued support for developers to bring unbundled Netflix content to their devices, and has opted to port their app to each device platform in order to maintain the look, feel, branding, and contractual rights required by Netflix and its licensors. *See* Roettgers, *supra* note 145 (Nov. 14, 2014) ("Netflix is shuttering its public API today, effectively ending support for a number of third-party apps that made use of the API to get TV and movie show titles as well as other data from the streaming service. … Apps or mashups that have made use of the public API will return 404 error messages starting today.").

[277] Under Google terms of service, Google demanded that Microsoft shut down its use of YouTube because "[t]he app blocked ads on videos, and it allowed users to download videos directly to their devices. Additionally, Google has said that the app also violates another rule, because it allows users to watch videos that have been set by the publisher to only play on certain devices (i.e. some videos are blocked on mobile.)" *As Predicted: Google Asks Microsoft to Shut Down New YouTube App*, PHONE ARENA.COM (May 15, 2013), http://www.phonearena.com/news/As-predicted-Google-asks-Microsoft-to-shut-down-new-YouTube-app_id43091. The Google YouTube Developer agreement now includes requirements that the developer protect Google's brand and not "separate, isolate, or modify the audio or video components of any YouTube audiovisual content made available through the YouTube API." *See Terms of Service – YouTube* (last accessed Apr. 1, 2016), https://developers.google.com/youtube/terms?hl=en; DSTAC Final Report at 277 (DSTAC WG4 at 142).

on videos or allow users to download videos to devices that had not been authorized by the publisher.[278]

What worked was developed entirely outside of the FCC rules and its vision: apps running on diverse, competing retail device platforms. Innovation occurred *outside* of FCC mandates, and accelerated when the FCC declined to adopt AllVid and allowed energies and innovation to be driven by consumer demand.

But the NPRM points backwards, in the opposite direction—away from apps, away from the market, away from the teachings of neutral standards bodies, insisting that only FCC tech mandates can drive technology in the right direction.

IX. IT WOULD BE ARBITRARY TO STANDARDIZE ACROSS ALL MVPDS IN TWO YEARS OR DEFAULT TO A DEFICIENT GOOGLE SPECIFICATION

A. Delegation to Standards Bodies Does Not Relieve the Destructive Consequences of a Government-Imposed Technology Mandate

In his Fact Sheet, the Chairman acknowledged that mandating a government-specific standard "might impede innovation," and the NPRM apparently tries to give the appearance of mitigating this problem by promising to leave the development of specifications to an "independent, open standards body."[279] The NPRM similarly suggests that it hasn't required convergence on a specific technical mandate because instead it would require that MVPDs provide the information flows in a manner that conforms to specifications set by "Open Standards Bodies," which it says "would provide each MVPD with flexibility to choose the standard that best aligns with its system architecture."[280]

---

[278] *Id.*

[279] Chairman's Fact Sheet at 1.

[280] NPRM at ¶ 35. *See also id.* at ¶ 42.

But the NPRM actually has proposed to dictate the one architectural point that it insists upon and that is a key source of its many failings: it requires the standards body to provide unbundled access to parts of MVPD service and data, and to totally remove any licensing or contractual responsibilities by tech companies to MVPDs and their content providers. An FCC order that MVPDs in perpetuity must deliver their video content through specific information flows, and thereby unbundle copyrighted content so that it can be converted into an open source commodity, is unquestionably a technical mandate, regardless of whether the FCC chooses to delegate the conforming standards to a standards body. Moreover, courts have repeatedly found that the loss of political accountability and due process rendered by such delegation of legal authority to a private organization is unlawful.[281]

Thus, the NPRM is wrong in asserting that its proposal "would provide each MVPD with the flexibility to choose the standard that best aligns with its system architecture."[282] The ground rules under which any standards body would be confined by the proposed rules do not allow for the adoption of standards that would best align with the technical or business requirements of MVPDs or the content creators that provide the programming they deliver.

B. The NPRM Trivializes Important Technological Differences Between MVPD Networks

The NPRM understates its disruptive and destructive effects by trivializing the enormous diversity in MVPD networks and operations on which it proposes to impose standards. It incorrectly claims that the DSTAC Report showed that "most MVPDs have coalesced around a few standards and specifications for delivery of the video content,"[283] when the Report actually

[281] *See* Legal White Paper at 66-69.

[282] NPRM at ¶ 35.

[283] NPRM at ¶ 4 (citing DSTAC Final Report at 28 (DSTAC WG2 at 1)).

explained the "variants of MPEG-2, MPEG-4 AVC and MPEG HEVC are used for video compression across MVPDs."[284] The NPRM ignores the fact that the DSTAC Report also includes a detailed recounting of agreement by all DSTAC members that there is wide diversity in networks, security, and communication technology choices across cable, DBS and IPTV systems.

The DSTAC Report provides an extensive briefing on technical differences among MVPD architectures and how those architectures call for different technical approaches. Unlike the telephone network that was originally built to a common nationwide standard, the cable industry is a roll up of these many technologies, with fundamental differences in technologies for CAS, controllers, the out-of-band (OOB) communications channels used for command and control of the set-top box, network transports, QAM modulation, video codecs, core ciphers, advanced system information such as network configuration, session management, operating system, processor instruction set, interactive services, billing systems, applications necessary for presentation of services, and in set-top boxes.[285]

The Direct Broadcast Satellite (DBS) architectures of DIRECTV and DISH Network are not merely one-way, but have substantial differences from each other, with differences in orbital slots that customer outdoor units (ODUs) must face, the satellite frequencies used, antenna components such as the low-noise block downconverters (LNBs), the multi-switches used to "tune" a channel to the right input frequency and/or right satellite, the CAS systems, the RF

[284] NPRM at ¶ 4 (citing DSTAC Final Report at 28 (DSTAC WG2 at 1)).

[285] The NPRM also incorrectly claims (in n.8) that guide data is delivered by SCTE 65. WG4 already reported that SCTE 65 Profiles 4-6 are not implemented. *See* DSTAC Final Report at 285 (DSTAC WG4 at 150). If UDCPs wish to use guide data, then based on the 2002 MOU and FCC Rule 15.123(b), retail UDCPs must obtain guide data through third parties other than the cable system.

encoding of the signals, the transport stream structures, and the set-top boxes (also known as IRDs), proprietary extensions, and home installation architectures.

AT&T uses IP unicast and multicast over DSL or B/GPON fiber, with a Digital Rights Management (DRM) approach instead of CAS. Verizon's FiOS service is a hybrid QAM and IP service.

These choices of different technologies and implementations are not random. DIRECTV uses RVU because it allows the MVPD user experience to be available on a client device even in households that don't have an available broadband connection, and enables very lightweight client devices. AT&T does not use UPnP for DVR or instant channel change because the current Mediaroom platform used by AT&T is based on a proprietary system designed by Microsoft and now owned and managed by Ericsson.

Because of these substantial variations, DSTAC agreed "[i]t is not reasonable to expect that all operators will re-architect their networks in order to converge on a common solution."[286] But the NPRM makes the fundamental mistake of assuming – for all networks, based only upon supposed evidence from one network – that the "specifications necessary to provide [the proposed mandated] Information Flows appear to exist today"[287] – and that it can impose them without impairing MVPDs' abilities to optimize their architectures and to keep innovating. The Technical White Paper details the fallacy of those assumptions.

The Commission should have been incredulous at the notion that suitable ready-to-use specifications were suddenly discovered by CVCC's October 2015 *ex parte* after eluding all of

[286] DSTAC Final Report at 3 (DSTAC Summary at 3).

[287] NPRM at ¶ 35, n.96 (citing DSTAC Final Report at 251-56 (DSTAC WG4 at 116-21) and Letter from John Bergmayer, Senior Staff Attorney, Public Knowledge, to Marlene H. Dortch, Secretary, FCC, MB Docket No. 15-64, at attachment (Oct. 20, 2015)).

the experts in DSTAC during their seven months of intensive deliberations. In DSTAC, the proponents of the NPRM's approach repeatedly conceded that key elements of their plan were founded upon incomplete and unproven premises. The proposal, they admitted, required many new inventions and "extensions" of existing technologies,[288] with even basic details still "to be determined,"[289] and that "there might not be a current standard that exists that fits the bill absolutely, so a lot of, through this section of the report is just suggestions on technologies that come close to fitting the bill or that could be extended in one way or another to satisfy the requirements with them."[290] The NPRM's suggestion that standards already exist is simply incorrect.[291]

But even if there were some way to deliver the information flows today on the Google Fiber network, as was supposedly demonstrated to the Commission, any assumption that such a test demonstrates readiness for all QAM, satellite, and IPTV and other MVPD networks ignores

---

[288] *See, e.g.,* Transcript of Aug. 4, 2015 DSTAC meeting at 190 (Mr. Love: "Something might have to be extended or created to be able to convey the amounts of rights that's – are to be reflected in today's systems. So the rights language is not specified because that would need to take input from the various parties to see what is actually required of them.").

[289] *Id.* at 73-74 (Mr. Love: "So for the discovery itself, there's various Zeroconf protocols … it's just one option that can be used to be able to discover a provider interface service on the local network. At that point, you know, whether it was standardized URLs that were as part of the interface or whether the service discovery or the service announcements contained more detailed manifest of the URL's itself is to be determined."); *id*. at 75-76 (Mr. Love: "the list of services to be delivered – the video services themselves, we're suggesting just delivery, possibly by SML formats. There are other formats that can be used … So there's various manifests that you can, or manifest formats, that you can use to describe the service, the video service information. And this is another part that still to be determined."); *id*. at 80 (Mr. Love: "In some cases, such as unidirectional services like satellites and DBS systems, some sort of other secure authentication would have to be determined"); *id*. at 107.

[290] *Id.* at 73.

[291] Contrary to claims in the NPRM at ¶ 43, neither the NPRM approach nor the CVCC approach is "largely based on DLNA VidiPath." Both would remove VidiPath's key requirements and replace them with a diametrically opposite set of new unproven requirements. The proposal removes the HTML5 RUI, authentication, encrypted media (EME, MSE), diagnostics, cloud to ground, choice and competition in security/DRM, and an HTML5 app output aligned with W3C standards for streaming media. Most fundamentally, it eliminates the app as the adaptation point – that is, the point of connection to each operator's private, unique protocols for, among other things, channels, VOD, and parental controls, as well as customer history, support and management. In its place, the proposal substitutes a set of unproven, uncompetitive elements that have little to do with the Internet technologies in widespread use today. NCTA DSTAC Reply Comments at 32-34.

the divergent requirements and characteristics of the various MVPD networks identified in DSTAC. The NPRM has not even thought through, let alone tackled, how its proposal can support diverse MVPD requirements for entitlements, security API, switched digital video ("SDV"), VOD, purchasing, or electronic sell through ("EST").[292]

Far from ushering in new competition and innovation by harnessing standards that the FCC claims are already available, the NPRM proposes to force the highly differentiated technologies of competing MVPDs to conform to a new, uniform and innovation-constraining straight jacket that impedes competition and innovation in networks, services, and customer offerings.

C. Two Years is An Impossibly Short Time for Creating a New Standard and Implementing It Across All MVPDs

Even if it were plausible that open standards bodies could develop appropriate standards, the NPRM affords far too little time to implement them. The NPRM states that "any necessary standardization, if pursued in good faith, should take no more than a single year," and accordingly proposed to require MVPDs to comply with the rules two years after adoption.[293] Even a single standard can take years to be finalized in standards bodies. It took the W3C (that develops international standards for the Internet) from 2004-2014 to create neutral standards for modern (HTML5) browsers and for streaming media through them, and ongoing development work continues to make it a more useful and efficient technology. It took six years to finalize the CableCARD specification and nine years to finalize the 1394 specification. The development of a successful standards program not only includes the standard, but also a certification program and test tools.

[292] Technical White Paper at 10-14.

[293] NPRM at ¶ 43.

Such six-to-ten year periods are typical even when there is widespread agreement on core objectives. But DSTAC met for seven months and never came close to establishing consensus even as to the objectives or general outlines of technical standards – indeed, one of the few points of consensus reached by that group was to agree that a consensus should not be expected: "[i]t is not reasonable to expect that all operators will re-architect their networks in order to converge on a common solution."[294] The notion that a consensus can now be forged within a year is implausible.

Even after standards are adopted, implementation takes additional time. The Commission has repeatedly accepted that creation of even a standalone consumer electronics product takes approximately 18-24 months.[295] The development of a product in conjunction with network reconfigurations takes far longer, and the Commission has routinely provided multi-year transition periods for changes that affect network operations. The Commission provided at least five years for cable to convert to aeronautical frequency offsets, for cable to meet new performance standards for signal leakage, for CE manufacturers to add digital tuners to all televisions, and for cable operators to separate their conditional access systems from the set-top

---

[294] DSTAC Final Report at 3 (DSTAC Summary at 3).

[295] *Implementation of Section 304 of the Telecommunications Act of 1996: Commercial Availability of Navigation Devices*, Report and Order, CS Docket No. 97-80, 13 FCC Rcd 14775 ¶ 80 (1998) ("We note that an 18-24 month development and production cycle is typically cited as necessary for significant changes to be incorporated into the manufacture of television receivers and other similar consumer electronic devices. With respect to the issue before us, both MVPDs (with respect to security modules) and consumer electronics manufacturers (with respect to non-security elements) are faced with somewhat similar design and manufacturing constraints. Each must move from the design specification arrived at through the standards process through to manufacturing and distribution."); *Technical Requirements to Enable Blocking of Video Programming Based on Program Ratings, Implementation of Sections 551(c), (d), and (e) of the Telecommunications Act of 1996*, Report and Order, ET Docket No. 97-206, 13 FCC Rcd 11248 ¶¶ 22-23 (1998); *Closed Captioning Requirements for Digital Television Receivers*, Report and Order, ET Docket No. 99-254, 15 FCC Rcd 16788 ¶¶ 54, 56 (2000); *Review of the Commission's Rules and Policies Affecting the Conversion to Digital Television*, Second Report and Order and Second Memorandum Opinion and Order, MM Docket No. 00-39, 17 FCC Rcd 15978 ¶ 41 & n.71 (2002); *Requirements for Digital Television Receiving Capability*, Second Report and Order, ET Docket No. 05-24, 20 FCC Rcd 18607 ¶¶ 17, 19 (2005).

boxes they leased.[296] Where FCC has previously set deadlines for implementation with no standard in hand, as it did for E911 automatic location identification, it set five years for the conversion and then had to keep postponing for many years more.[297] The ATSC transition to digital television adopted in the 1996 Act required thirteen years to implement. The transition of the telecommunications network from time division multiplexing to IP will have spanned decades before it is completed.

By the time standards are developed, tested and implemented, the market will have moved on. Think of how much has changed in just the last five years, and what will happen in the next five. The proposed tech mandate would be obsolete before it could be completed.

---

[296] *Amendment of Part 76 of the Commission's Rules to Add Frequency Channeling Requirements and Restrictions and to Require Monitoring for Signal Leakage from Cable Television Systems*, Second Report and Order, Docket No. 21006, 99 FCC 2d 512 ¶¶ 66-67 (Nov. 9, 1984); *Amendment of Part 76 of the Commission's Rules to Add Frequency Channeling Requirements and Restrictions and to Require Monitoring for Signal Leakage from Cable Television Systems*, Memorandum Opinion and Order, Docket No. 21006, 101 FCC 2d 118 ¶ 16 (July 1, 1985); *Review of the Commission's Rules and Policies Affecting the Conversion to Digital Television*, Second Report and Order and Second Memorandum Opinion and Order, MM Docket No. 00-39, 17 FCC Rcd 15978, 15996 ¶ 41 (Aug. 8, 2002); *Implementation of Section 304 of the Telecommunications Act of 1996, Commercial Availability of Navigation Devices*, Report and Order, CS Docket No. 97-80, 13 FCC Rcd 14775 ¶¶ 68-69 (June 24, 1998) ("*First Report and Order*").

[297] *See, e.g., Revision of the Commission's Rules to Ensure Compatibility with Enhanced 911 Emergency Calling Systems*, Report and Order and Further Notice of Proposed Rulemaking, CC Docket No. 94-102, 11 FCC Rcd 18676 (1996) (requiring compliance with E911 Phase II ALI requirements within 5 years of effective date of rules); *Revision of the Commission's Rules to Ensure Compatibility with Enhanced 911 Emergency Calling Systems*, Third Report and Order, CC Docket No. 94-102, 14 FCC Rcd 17388 (1999) (revising compliance deadlines culminating on Dec. 31, 2004, more than 8 years after original effective date, and extending compliance deadline for network-based solutions by one year to Oct. 1, 2002, 6 years after original effective date); *Revision of the Commission's Rules to Ensure Compatibility with Enhanced 911 Emergency Calling Systems,* Fourth Memorandum Opinion and Order, CC Docket No. 94-102, 15 FCC Rcd 17442 (2000) (revising deadline to Dec. 31, 2005, more than 9 years after original effective date); *Wireless E911 Location Accuracy Requirements; Revision of Commission's Rules to Ensure Compatibility with Enhanced 911 Emergency Calling Systems; 911 Requirements for IP-Enabled Service Providers,* Report and Order, PS Docket No. 07-114; CC Docket No. 94-102; WC Docket No. 05-196, 22 FCC Rcd 20105 (2007) (extending the full compliance deadline to Sept. 11, 2012, 16 years after the original effective date); *Wireless 911 Location Accuracy Requirements,* Second Report and Order, PS Docket No. 07-114, 25 FCC Rcd 18909 (2010) (revising various compliance deadlines , culminating on Jan. 18, 2019); *Wireless 911 Location Accuracy Requirements,* Fourth Report and Order, PS Docket No. 07-114, 30 FCC Rcd 1259 (2015) (imposing compliance deadlines culminating 6 years from the Order's effective date for horizontal location information and 8 years from the Order's effective date for vertical location information).

D. Standardization Would Expose MVPDs to Increased Patent Litigation

Forcing the entire MVPD industry to comply with hastily implemented technical standards would increase the threat of patent litigation in an already-litigious atmosphere. Mandatory standardization compromises the ability to invent around third party intellectual property. The MVPD and set-top box market includes numerous, aggressive patent rights holders and a corresponding history of lengthy patent-assertion campaigns against multiple companies to pursue hundreds of millions of dollars in patent infringement damages. Video-on-demand and switched digital video implementations are laced with patents, and competing vendors use those IP rights as a key foundation for their businesses.[298] TiVo aggressively pursues patent litigation related to its technology and patent licensing fees account for over $1.6 billion in judgments and settlements—a major portion of TiVo's overall revenue.[299] Observers

---

[298] *See nCUBE Responds to SeaChange Patent Suit*, MULTICHANNEL NEWS (June 18, 2000), *available at* http://www.multichannel.com/news/orphan-articles/ncube-responds-seachange-patent-suit/153471; Brian Santo, *VOD Patent Battle Turns Bitter*, CABLE WORLD (Jan 15, 2001) ("nCube's patent appears to be fairly broad, describing a fundamental process that covers, among other things, video-on-demand (VOD)."); *nCUBE Claims Victory in VOD Patent Spat*, CED MAGAZINE (June 30, 2002), *available at* http://www.cedmagazine.com/news/2002/06/ncube-claims-victory-vod-patent-spat ("The jury also ruled that SeaChange must pay nCUBE in excess of $2 million in damages, plus a seven percent royalty on all sales of infringing products after Feb. 1, 2002.").

[299] *See,* Jeff Baumgartner, *TiVo Sues Samsung (Updated)*, MULTICHANNEL NEWS (Sep. 8, 2015), http://www.multichannel.com/news/content/tivo-sues-samsung/393571 (quoting TiVo CEO Tom Rogers as saying: "People know that we have quite a track record when it comes to our litigation and they also know that we don't pursue these things unless we believe there is significant damage opportunity."); TiVo's (TIVO) CEO Tom Rogers on Q3 2016 Results - Earnings Call Transcript (Nov. 24, 2015), *available at* http://seekingalpha.com/article/3711966-tivos-tivo-ceotom-rogers-on-q3-2016-results-earnings-call-transcript (quoting Rogers as saying: "[W]e delivered an unprecedented $1.6 billion in judgments and settlements related to our IP."); Todd Spangler, *TiVo Settles Patent Suits with Cisco, Google and Time Warner Cable*, VARIETY (Jun. 7, 2013), http://variety.com/2013/digital/news/tivo-hauls-490-mil-in-patent-settlement-with-cisco-and-google-1200493963/ (noting that TiVo's $1.6 billion in patent revenue "exceeds the gross revenue the company has generated over the past six years, from 2007 to 2012"); *see also* Janko Roettgers, *TiVo Files Patent Infringement Lawsuit Against Samsung*, VARIETY (Sep. 8, 2015), http://variety.com/2015/digital/news/tivo-files-patent-infringement-lawsuit-against-samsung-1201588124/ ("Basically, if a company makes a digital video recorder and has enough cash on hand, there's a good chance that TiVo has filed a lawsuit against it at some point."). Examples of TiVo's patent litigation can be found in the following case dockets: *e.g.*, *TiVo, Inc. v. Sonicblue Inc. and ReplayTV, Inc.*, No. 4:02-cv-00365 (N.D. Cal.); *TiVo, Inc. v. EchoStar Commc'ns Corp., et al.*, No. 2:04-cv-00001 (E.D. Tex.); *TiVo Inc. v. AT&T Inc.*, No. 2:09-cv-00259 (E.D. Tex.) (Microsoft intervening); *TiVo Inc. v. Verizon Commc'ns, Inc., et al.*, No. 2:09-cv-00257 (E.D. Tex.); *TiVo Inc. v. Cisco Systems Inc. and Time Warner Cable*, No. 2:12-cv-00311 (E.D. Tex.); *TiVo Inc. v. Samsung Elecs. Co., et al.*, No. 2:15-cv-01503 (E.D. Tex.).

have stated that TiVo is seeking to "preserve its lucrative patent business" by increasing manufacturer exposure to its patent claims.[300] Whatever patent disclosure and licensing rules a standards body might follow, the standards body cannot immunize users of the standard from patent claims brought by non-participants. TiVo, for example, is not a member of DLNA, and is therefore under no obligation to provide a patent license on RAND terms to implementers of the DLNA standards. The NPRM would arbitrarily make no provision for MVPDs to protect themselves from such claims.

E. It Would be Arbitrary to Default to the Google Proposal

Although the standards would supposedly be left to industry standards development, the FCC is well aware that consensus in standards bodies is unlikely, given the inability to reach consensus in DSTAC. The NPRM therefore suggests adoption of a disingenuous "fallback" rule that would impose the Google-favored specification if a standard is not adopted to meet its unbundling mandate or not fully implemented in two years.[301] Reaching a consensus in any standards body would have already been difficult enough even without the government tipping the scale; if the FCC's rules established a fallback to the Google specification, it would be harder than ever, since Google and its allies would have no incentive to compromise when they know that if they cannot get exactly what they want from the standards body they could always block its progress and have their proposal become the law of the land.

It would be particularly arbitrary to default after two years to a specification that has already been demonstrated not to work as advertised and that certainly does not meet the goals of

---

[300] *See, e.g.*, Jacob Kastrenakes, *TiVo Is Trying to Preserve Its Lucrative Patent Business by Suing Samsung*, THE VERGE (Sep. 8, 2015), http://www.theverge.com/2015/9/8/9284091/tivo-samsung-dvr-patent-lawsuit.

[301] *See* NPRM at ¶ 43.

Section 629. NCTA has detailed the many failings and omissions of Google's proposal in its reply comments filed in this proceeding regarding the DSTAC Report,[302] including that:

- Google's proposal relies upon DTCP-IP and UPnP, which the proponents admitted do not work with cloud delivery.[303]

- DTCP does not support current business models or licensing terms regarding copyrights and entitlements. Neither content owners nor distributors treat DTCP as sufficient in itself. DTCP was designed nearly twenty years ago for the IEEE-1394 connector from one device to the one right next to it; DTCP-IP still serves as a local in-home protection to supplement other content protection technologies, not to supplant them. It has been slow to evolve and does not even support today's offerings or IP multicast as DRM systems do. Because DTCP-IP does not support common encryption, MVPDs would be unable to switch quickly among competing DRM systems in response to a successful hack. Its limitations cannot be fixed with a change to the DTLA/DTCP license agreement.[304]

- From their beginning, UPnP products and UPnP specs have been designed to let individual consumer-owned devices find each other *on local home networks*, not for connecting all MVPD households and all their devices to the cloud.

- The Google specification would require the creation of an entirely new intermediary device and new network protocols to provision and manage that device, new operational support systems, and the very kind of network re-architecting that DSTAC said should not be required of MVPDs. In DSTAC, the proponents of the Google proposal tried to minimize the burden on MVPDs of deploying these "interim gateways" by claiming that MVPDs could use existing boxes, but, as noted by critics in the DSTAC report, "This optimistic theory is unsupported by any analysis, even a cursory one, and runs counter to the decades of experience of MVPDs who continually deploy new generations of in-home hardware after previous generations are found to lack the ability to accept new, more complex and larger software downloads that expand capabilities and provide new features."[305]

---

[302] NCTA Reply Comments at 25-36.

[303] NCTA Reply Comments at 27, 35-36.

[304] *See* NCTA Jan. 15, 2016 *Ex Parte* at 2-3; DSTAC Final Report at 282-83, 293 (DSTAC WG4 at 147-48, 158); NCTA DSTAC Comments at 25; NCTA DSTAC Reply Comments at 27, 28-29, 35-36.

[305] DSTAC Final Report at 287 (DSTAC WG4 at 152).

By consensus, the DSTAC Report concluded that, "It should not be necessary to disturb the potentially multiple present and future security and other network technology choices made by cable, DBS and IPTV systems" and further stated that "It is not reasonable to expect that all operators will re-architect their networks in order to converge on a common solution."[306] The Commission would already be imposing a tech mandate by rejecting the approach adopted world-wide by standards bodies and dictating its mandatory unbundling to the unnamed open standards body. Imposing a "fallback" technical mandate, knowing full well the likelihood that it will be triggered, means that the NPRM undeniably would be the tech mandate that it claims not to be: a fixed set of specifications imposed by government mandate without even collecting, let alone accounting for views of industry.

X. THE PROPOSED MANDATE WOULD INCREASE CONSUMER COSTS

MVPDs invest hundreds of millions of dollars to deploy a network and CPE to provide service. These networks have constraints based on the physical nature of the network medium (RF wirelessly or over coax, twisted pair copper, light signals over fiber). The physical constraints drive network architectures and the capital investment necessary to build and deploy the network and CPE devices.[307] MVPDs have also invested in developing apps for retail devices. Apps preserve these network optimizations by allowing the applications to be partitioned according to the network architecture, while writing code that runs the service (and

[306] DSTAC Final Report at 2, 3 (DSTAC Summary at 2, 3).

[307] Technical White Paper at 24-29. As DSTAC reported, Verizon devoted an entire fiber wavelength to its linear video offering and transitioned to all-digital. AT&T launched its U-verse service designed to maximize its bandwidth for HD and other services. Cable operators responded with switched digital video (SDV) and DTAs to repurpose analog spectrum and add more channels, more High Definition, faster broadband, and more innovative services. Features such as instant channel change and multi-room DVR enabled AT&T to better compete against incumbent cable operators, despite limitations of its VDSL networks. Remote Storage DVR enabled Cablevision to compete against multi-room DVR features. DSTAC Final Report at 299 (DSTAC WG4 at 164).

user interface) on the various device platforms adopted by CE manufacturers, such as Roku, iOS, Android and so forth.[308]

The FCC set-top box mandate would compel delivery of some subset of service under a yet-to-be-invented standard *without* the use of apps and user interfaces like those that serve Roku, iOS, Android, etc. and *outside* of the chain of trust. Proponents say this is all off the shelf, but they are wishing away the actual differences in MVPD architectures and networks. If the development of specifications is actually being left to an independent, open standards body, then proponents cannot know what the demands of the standard will be.

A. The NPRM Would Mandate More In-Home Set-Top Boxes

While the NPRM seeks to dress the set-top box mandate in forward-looking garb, its approach is backward-looking: rather than allowing MVPD customers to access service directly on their display device via an MVPD app, it would require customers to lease a new gateway device from the MVPD just to reach the display device or a retail device connected to the display.

Apps are free and work with pay-TV subscriptions on devices customers already have in the home, such as tablets, smartphones, Smart TVs, computers, and devices like Rokus. Charter has explained that "with smart televisions and smart tablets, which essentially allow the TV or the tablet to operate as a set-top box and a TV combined, we think that incremental CPE will become less and less a factor in our overall capital structure."[309] As noted above, cable operators are working toward offering customers the ability to access their services without having to rent

[308] DSTAC Final Report at 280 (DSTAC WG4 at 145).

[309] Seeking Alpha, Charter Communications Management Discusses Q2 2013 Results – Earnings Call Transcript, SeekingAlpha.com (Aug. 6, 2013), http://seekingalpha.com/article/1609042-charter-communications-management-discusses-q2-2013-results-earnings-call-transcript (quoting Thomas M. Rutledge, President and CEO).

a set-top box at all Apps are already leading towards a world with fewer and fewer MVPD-leased set-top boxes. But the FCC set-top box mandate leads us backward into the past.

The NPRM states that, "[w]e believe that our proposal does not require most MVPDs to develop or deploy new equipment."[310] But though an extra box might not be *legally* required, that unquestionably would be the practical effect. The FCC's DSTAC Report explains that the satellite and IPTV providers (which together serve more than 40% of the market) would have no choice but to deploy an additional device.[311] As for other operators, even Public Knowledge (a primary proponent of the proposed rules) has conceded that if the NPRM proposal is adopted "y*ou're probably in the short term going to need something in the house.*"[312] The MVPD industry experts who operate systems and participated in DSTAC have concluded that, whether or not the NPRM explicitly calls for network redesign or a new in-home government-designed box that consumers would have to lease from their MVPD, the functional demands of the proposal require both. Operators would end up deploying these extra devices because the alternative is not practicable. This is because the FCC's set-top box mandate would freeze specific technology formats for delivery of the "information flows," and locking those in permanently in the network would make it much more difficult to implement new and more

[310] NPRM at ¶ 46.

[311] In 2015, the FCC chartered the Downloadable Security Technical Advisory Committee (DSTAC) pursuant to a directive from Congress "to identify, report, and recommend performance objectives, technical capabilities, and technical standards of a not unduly burdensome, uniform, and technology- and platform neutral software-based downloadable security system designed to promote the competitive availability of navigation devices in furtherance of Section 629 of the Communications Act." DSTAC issued its report in August 2015, which included extensive evaluation critiquing the "AllVid"-style proposal upon which the FCC's new proposal is largely based. *See* DSTAC Final Report at 286 (DSTAC WG4 at 151) ("The Device Proposal [which is similar to the NPRM proposal] does not even support linear channels within its own terms. It explicitly acknowledges reliance on "prosthetic" auxiliary devices [i.e., a new gateway device] for satellite and IPTV, at the very least – meaning more boxes (and more energy consumption)."

[312] Jared Newman, *The FCC Wants to Blow Up the Cable Box. Here's What Its Proposal Will (and Won't) Do*, TECH HIVE (Feb. 25, 2016), http://www.techhive.com/article/3036829/streaming-hardware/the-fcc-wants-to-blow-up-the-cable-box-heres-what-its-proposal-will-and-wont-do.html (quoting John Bergmayer, senior staff attorney, Public Knowledge).

efficient network innovations. Providers would therefore be compelled to use new devices inside the home to deliver the "information flows" so that, for example, if they were required to deliver MPEG-2 transport and MPEG-4 content to retail devices, they wouldn't be forced to carry MPEG-2 forever across their networks.[313]

B. The Proposed Mandate Would Undermine Energy Efficiency

The Natural Resources Defense Council (NRDC), one of the nation's foremost advocates of energy efficiency, recently filed comments in this docket stating its concern that "the FCC did not take into account the energy use and environmental implications of its proposal."[314] The NPRM makes only one reference to energy – incorrectly claiming that granting software developers access to the information flows "will ensure that consumers will not be forced to use outdated, power-hungry hardware to receive [MVPD] services."[315] The reality is that it is the NPRM that would force consumers to use energy-wasting additional devices. MVPD set-top boxes have rapidly improved their energy efficiency, but under the NPRM, they would be forced to deploy additional energy-consuming hardware, and the proposed parity rules would force them to abandon certain energy-efficient boxless solutions.

1. Energy Efficiency Under the Voluntary Agreement

In late 2013 the MVPDs, their equipment suppliers, NRDC, the American Council for an Energy-Efficient Economy (ACEEE), and the Appliance Standards Awareness Project (ASAP) joined in a trailblazing Voluntary Agreement on set-top box energy efficiency. The U.S. Department of Energy and Energy Secretary Ernest Moniz hailed the new standards of the agreement, which improves set-top box efficiency by 10 to 45 percent by 2017, and is expected

[313] Technical White Paper at 31-32.

[314] NRDC Comments at 1 (Apr. 13, 2016).

[315] NPRM at ¶ 30.

to save more than $1 billion on consumer energy bills annually.[316] Voluntary Agreement commercial signatories and participants include AT&T/DIRECTV, Comcast, DISH Network, Time Warner Cable, Verizon, Cox Communications, Charter Communications, Cablevision, Bright House Networks, and CenturyLink; manufacturers Cisco (now Technicolor), ARRIS (including Pace and Motorola), EchoStar Technologies; and the Consumer Technology Association (CTA) and NCTA. According to the most recent report of the independent administrator, the Voluntary Agreement has already saved consumers over $500 million in energy bills for set-top boxes.[317]

2. The Proposed Set-Top Box Mandate Would Erase Energy Savings Achieved by the Voluntary Agreement

The FCC would give MVPDs a mere two years for standards bodies to agree on specifications and for MVPDs to then implement the information-flows architecture. As discussed above, MVPDs would need to create and deploy a new intermediary device in homes using retail devices in order to deliver the information flows. The creation of an entirely new class of device with new functionality normally requires a longer period to develop, and in the rush to try to meet the FCC's deadline, it would not be possible to optimize the energy efficiency of the first generation of these devices. Their energy usage would be on the high end of cable consumer devices due to all of the required functionalities, which include characteristics of modems, routers, and set-top boxes. Even if they could be made compliant under the allowances of the Voluntary Agreements for set-top boxes and for small network equipment, experts

[316] Press Release, Energy.gov, U.S. Energy Department, Pay-Television Industry and Energy Efficiency Groups Announce Set-Top Box Energy Conservation Agreement; Will Cut Energy Use for 90 Million U.S. Households, Save Consumers Billions (Dec. 23, 2013), http://energy.gov/articles/us-energy-department-pay-television-industry-and-energy-efficiency-groups-announce-set-top. *See also* NRDC Comments at 3.

[317] Annual Report of the Independent Administrator of the Voluntary Agreement for Ongoing Improvement to the Energy Efficiency of Set-top Boxes, available at http://www.ce.org/CorporateSite/media/Government-Media/2014-Annual-Report-STB-Voluntary-Agreement.pdf.

estimate that the electricity needed for these new devices could be more than 200 kWh per year. Customers would still need separate modem/routers for their Internet service, as it is not currently possible for commercial routers used with the customers' Internet service to perform all of the FCC's new peculiar requirements.

NRDC has warned the FCC that "the energy and environmental costs of such an additional box will really add up if a large percentage of the 90 million homes that subscribe to pay TV services are affected."[318] If these new retail boxes enjoy at least the success of the MVPD apps that have been downloaded to iOS and Android (56 million downloads), the additional energy consumption would add $1.6 billion to residential energy bills, wiping out the gains of the Voluntary Agreement, and add 9 million tons of extra CO_2 emissions annually.

3. The Proposed Parity Rules Would Erect Barriers to Boxless Solutions

The proposed "parity" rules would exacerbate dependence on set-top boxes, because they would prohibit an MVPD from making a boxless solution available via app to any one device (such as Charter, Time Warner Cable, and soon Comcast's boxless delivery of their apps to Roku) unless it also makes a boxless solution available without app for every third-party device or application—a nearly impossible hurdle. Thus, the FCC's proposal would not only require MVPDs to put a new box into every home that used a new retail device, it would also erect barriers to MVPDs' evolution towards boxless solutions. The FCC's proposed rule would drive the industry away from development efforts to serve customers using only their modem and a smart TV to solutions that require two boxes – a new FCC-mandated gateway from their MVPD and a retail device from some third party, effectively the MVPD-supplied "AllVid" adapter the FCC proposed in 2010 before the apps revolution.

[318] NRDC Comments at 2.

It is evident that the FCC has not given any serious consideration to the energy consequences of its set-top box proposals. Its omission is particularly frustrating given that the FCC's prior set-top box rules were widely criticized for wasting energy. The FCC's CableCARD "integration ban" mandate increased cable customers' energy consumption and then-Representative Henry Waxman expressly supported Congressional repeal of that mandate because it "had the perverse effect of hindering energy efficiency in set top boxes."[319] The proposed mandate would repeat the mistake, in spades.

C. The Proposed Mandate Would Increase Network Costs

The FCC is proposing significant changes to MVPDs' existing architectures and systems. Other large-scale projects with a nationwide footprint provide a perspective on the time and costs to comply with the NPRM's proposed architecture. As detailed in the Technology Report, creating the secure, end-to-end system for chip-enabled credit cards and payment systems also involved nationwide distribution and millions of devices. The Europay, MasterCard, and Visa (EMV) project required an extensive list of specifications that took years to develop. Multiple working groups were required to develop qualification, accreditation requirements, testing methodology and auditor requirements for a variety of card and mobile systems and equipment; to develop procedures for assuring interoperability and resolving interoperability problems; to address and resolve technical infrastructure issues; and to design and evaluate security and assure annual risk assessment. Building the standards and procedures for certification, security and accredited testing also took years. The transition to the chip credit card is expected to cost $8 billion.

[319] Congressional Record, 113th Congress, 2nd Session, Vol. 160, No. 142 at p. H8086 (Nov. 19, 2014) (Statement of Hon. Henry Waxman); *see also* Dissenting Statement of Commissioner Ajit Pai (pointing out that the FCC's CableCARD rules "have increased cable customers' energy consumption by 500 million kilowatt hours each year, enough to power all the homes in Washington, DC for three months").

Charter's recent experience in overlaying a new downloadable security while maintaining operations for its extensive existing plant provides another helpful example. What the FCC envisions as just opening up additional information flows protected by a new conditional access system in fact required Charter to build a national entitlement control system; build new interfaces to the billing system; change bulk encryptors; modify the controllers; rebuild and switch out QAMs at every hub in advance of each system launch (typically in the middle of the night). The Charter project took twice as long as the FCC proposes for the entire MVPD industry.[320]

D. The Proposed Mandate Would Increase Consumer Costs

MVPD subscribers would be saddled with massive costs from the set-top box mandate whether they want retail devices or not. Customers using retail boxes would still pay for their MVPD service and would also pay a lease fee for the new in-home box to serve that retail device, and the higher electrical bills to power that box.[321] But the other costs assigned to MVPDs will inevitably have to be recovered from all consumers, whether or not anyone manufacturers retail devices and whether or not consumers buy them. The NPRM simply assumes away:

- Cost of developing standards
- Cost of developing specifications

[320] Technical White Paper at 47; *see also* Dr. James Alexander, Augmenting Traditional Conditional Access with Downloadable CAS, using SimulCrypt, A Technical Paper prepared for the Society of Cable Telecommunications Engineers, Cable-Tec Expo '15 (2015).

[321] The NPRM would also impose a new toll on customer purchases of MVPD service through third-party apps. Retail platforms often subsidize their product costs with tolls on the apps. For example, iOS and Android collect one-third (1/3) of transactional revenue conducted through apps. The proposed rules do not prevent any retail device from imposing similar creative tolls or pay walls such as a charge to access video-on-demand that is already included in a customer's MVPD subscription to a premium channel.

- Cost of Cap Ex, Op Ex, and NRE (non-recurring engineering costs) for system engineering, system testing, and system deployment to support new standardized information flows
- Cost of new product development
- Cost of new product testing and implementation
- Cost of billing system integration
- Cost of new compliant security system
- Cost of intellectual property rights in rights expression language, guides, and other patented elements in the "standard"
- Cost of developing and operating new cybersecurity defenses
- Cost of moving data across area networks, switchers, and routers
- Cost of training customer service staff for customer support, and ongoing cost for customer support
- Cost of ongoing engineering support
- Cost of ongoing software maintenance support
- Opportunity cost of bandwidth, such as bandwidth lost to uncontrolled unicast or simulcasted IP multicast
- Opportunity cost in customer offering delayed or disallowed
- Opportunity cost of delayed or disallowed offer of cloud-based solutions
- Opportunity cost of delayed or disallowed adoption of more advanced audio and video formats, resolution, encoding, transport and content formats
- Opportunity cost of delayed or disallowed adoption of next-generation security solution
- Losses in advertising revenue
- Losses in programming diversity
- Losses in delayed, diverted or abandoned development on services, technologies and innovation actually desired by consumers
- Losses in promised consumer protections

The Commission has conducted no study of these other costs of its proposal, and yet it has assumed that whatever the cost, the FCC set-top box mandate is worth it. As discussed in the Legal White Paper, the Supreme Court has made clear that "agency action is lawful only if it rests on a consideration of the relevant factors" and "cost" is undoubtedly "a centrally relevant

factor when deciding whether to regulate."[322] Instead, the NPRM simply concluded, arbitrarily and without evidence, that its proposal was the "least burdensome." The proposal is contrary to both STELAR's command that any new downloadable security regime not be "unduly burdensome,"[323] and the NPRM's own quest for the "least burdensome way to assure commercial availability of navigation devices."[324]

E. The Real Price of Set-Top Boxes Today

All of these cost increases that would be caused by the NPRM's proposal undermine its claim that it would reduce the amount consumers spend on set-top box boxes. Even if no new costs were being imposed, this is a curious goal, given that in 1993 the FCC established rate regulation rules for cable set-top box rents that provide that "subscriber charges for such equipment shall not exceed charges based on actual costs" in accordance with the requirements set forth in FCC regulations. For the past 20 years, the FCC has capped cable set-top box rents *at cost*.

The NPRM cites two deeply flawed "studies" to support the Commission's theory of consumer savings, painting a misleading picture about MVPDs' supposed profits from set-top boxes. [325]

First, the limited "survey" by Senators Markey and Blumenthal claims set-top box revenue for the ten largest MVPDs "may be" $19.5 billion per year and that the average

---

[322] *See* Legal White Paper at 80, quoting *Michigan v. E.P.A.*, 135 S. Ct. 2699, 2706-07 (2015).

[323] STELA Reauthorization Act of 2014, H.R. 5728, 113th Cong., § 106 (2014) ("STELAR").

[324] NPRM at ¶ 35.

[325] NRPM at ¶ 13.

household spends $7.43 per month per box, for a total of $231 annually.[326] As Dr. Wildman explains, the numbers are "statistically unfounded."[327] The figures are exaggerated because the study ignored data (provided in the very same survey) on the substantial promotions and discounts that reduce consumer costs. The Markey/Blumenthal study assumes that MVPDs are charging the full "rack rate" for every device, even as two providers responding to the survey reported offering customers a free set-top box while another reported an average discount of 37%.[328] Failing to factor in these and other widely available discounts substantially inflates the purported cost paid by consumers. The Markey/Blumenthal study also ignores the availability of low-cost devices such as DTAs and "boxless" apps that are already widely used, further distorting its "average" numbers.

The NPRM also touts a pseudo-study by the Consumer Federation of America (CFA) that claims TV providers enjoy profit margins as high as 70% on leased set-top boxes.[329] The CFA's

---

[326] *See* Press Release, Markey, Blumenthal Decry Lack of Choice, Competition in Pay-TV Video Box Marketplace (July 30, 2015), available at http://www.markey.senate.gov/news/press-releases/markey-blumenthal-decry-lack-of-choice-competition-in-pay-tv-video-box-marketplace.

[327] *See* Economic White Paper at 17.

[328] *See, e.g.,* Letter from Timothy P. McKone, Exec. VP, AT&T (Dec. 11, 2014), http://www.markey.senate.gov/imo/media/doc/Response%20--%20ATT%20%2012-11-14.pdf (explaining that AT&T provides one set-top box at no additional charge with each of its packages); Letter from R. Stanton Dodge, EVP & General Counsel, DISH Network LLC (Dec. 11, 2014), http://www.markey.senate.gov/imo/media/doc/Response%20--%20Dish%20%2012-11-14.pdf (stating that "[t]here is no lease cost for the first DISH receiver"); Letter from Steve Miron, CEO, Bright House Networks (Dec. 11, 2014), http://www.markey.senate.gov/imo/media/doc/Response%20--%20Brighthouse%20%2012-11-14.pdf (discussing discounted set-top boxes included in bundles or as part of promotional packages as well as discounts provided for customer use of retail devices).

[329] *See* Letter from Mark Cooper, Director of Research, Consumer Federation of America and John Bergmayer, Senior Staff Attorney, Public Knowledge, to Marlene H. Dortch, Secretary, FCC, MB Docket No. 15-64 (Jan. 20, 2016). In addition, CFA makes deceptive claims that consumer electronics costs have dropped 90% while set-top box costs have increased 185%. These claims ignore change in both the quality and quantity of set-top boxes over time. The basic 1994 set-top box used in CFA's chart cost less than $2.50 per month. An equivalent basic device today, such as a digital adapter, generally costs $1-3 per month and is sometimes offered free. It's also misleading and inaccurate to compare modern boxes – with digital DVRs, 500 GB or more of memory, multiple tuners, and Internet connectivity – to rudimentary 1994 devices. Furthermore, CFA fails to acknowledge that set-top box prices were largely regulated and capped by the FCC during the time covered by their "study," so by law any increases in rates during that time were the result of increases in the actual cost of equipment – not bigger profit margins.

claims ignore the substantial costs involved in purchasing, maintaining, and installing these boxes, which contradict claims of excessive profits. Cable companies alone, which serve only half of all multichannel customers, spend $7 billion each year on customer equipment purchases from independent manufacturers, plus another $1 billion on maintenance of the devices for which they bear continuing responsibility.[330] These figures don't even include the costs satellite and telco TV providers incur each year to buy and maintain set-top boxes. Failing to account for these costs renders CFA's claims on set-top box margins incomplete and meaningless.

Even if the FCC's erroneous estimate of a $7.43 per month average rental cost for set-top boxes were not exaggerated, that amount is still less than half of TiVo's $14.99 monthly service fee – not even counting the $299-$599 up-front cost to purchase and own a TiVo DVR, which comes with a limited warranty and no assurance against technological obsolescence.[331] By contrast, consumers renting a set-top box from an MVPD pay nothing up front, make no commitment, and can return the box at any time to upgrade to a new device with the latest technology or cancel service. A $7.43 rate compared to TiVo is a good deal for consumers. Indeed, a recent study by the Chief Economist of the Phoenix Center found that non-profit municipally-owned and operated MVPDs charge an average of $7.65 per month per set-top

---

Finally, claims of hyper-reduction in the costs of consumer electronic equipment are also misleading: CFA compared a $1,000 StarTAC phone with a mobile phone allegedly available today for $100. But most $100 "prices" for phones today are subsidized by carriers as part of long-term service contracts, and CFA's own source for mobile phone prices acknowledges that phones without contracts cost $300-500+. Second, the price of comparable phones has not dropped at the pace suggested by CFA. The average selling price of an iPhone has increased over the last five years, and in the fourth quarter of 2015 was at its highest price ever at $691. The claim that cellphone prices have dropped 90% is false. *See* Economic White Paper at 16-19.

[330] *See* Ian Olgeirson, *Record CapEx Expected for 2014, 5-year Forecast Points to Moderating Spending*, SNL KAGAN MULTICHANNEL MARKET TRENDS (Sept. 8, 2014), subscription service.

[331] *See* TiVo.com, Complete Service Plan Terms and Conditions, https://www.tivo.com/shop/bolt#/bolt (last visited Mar. 17, 2016).

box.[332] The FCC is essentially claiming that the rates charged for set-top boxes are excessive and an abuse of market power. But if the very municipal systems that the FCC has been striving to promote and expand as champions of competition and public service are charging the same rental rates the FCC attributes to MVPDs, the FCC needs to rethink its ungrounded claims of excessive rates and abusive overcharges, and start taking seriously ample evidence that current set-top rental rates fairly reflect the actual costs that MVPDs incur in providing set-top boxes.

XI. THE PROPOSED PARITY RULES WOULD REPEAT THE COMMISSION'S PAST MISTAKES

Like the Commission's failed "common reliance" mandate in its CableCARD rules, which resulted in the wasteful deployment of 55 million CableCARDs and constrained cable operator innovation for a decade, a fundamental problem with the NPRM's proposed parity rules is that they would handcuff MVPDs to a set of rigid requirements that are bound to result in unintended consequences that hurt consumers and impede innovation. The negative consequences of these unintended consequences would fall on all consumers for years to come, even if no consumers ever use, or are still using, retail devices that are designed to ingest the disaggregated information flows.[333]

The NPRM's first proposed parity rule is that "if an MVPD makes its programming available without requiring its own equipment, such as to a tablet or smart TV application, it must make the three Information Flows available to competitive Navigation Devices without the need for MVPD-specific equipment."[334] The NPRM states that this proposal rule is based "on

[332] George S. Ford, *Are Government-Owned Networks Abusing Market Power in the Set-Top Box Market? A Review of Rates*, PERSPECTIVES (Apr. 14, 2016), http://www.phoenix-center.org/perspectives/Perspective16-03Final.pdf.

[333] No "parity" rule should be imposed that does not make clear that it does not apply before the first retail devices using the information flows are offered, or after the manufacture of the last such devices ceases.

[334] NPRM at ¶ 63.

the presumption that if an MVPD can securely provide the information necessary for its proprietary application to access its programming without any additional equipment, then the MVPD should be able to provide *that information* to non-affiliated Navigation Devices similarly without additional equipment."[335] But the NPRM would not allow MVPDs to supply only "that information" which is associated with the support of its boxless delivery of apps. Instead, the NPRM would require MVPDs to provide the three very different disaggregated "information flows" to retail devices, which is much more complicated than boxless delivery of an MVPD app to specific retail devices. The consequence of the first proposed "parity" principle is that an MVPD could not deliver a boxless solution via app to one device unless it also makes a boxless solution available without app for every third-party device or application—a nearly impossible hurdle. Should MVPDs terminate the apps that consumers have already downloaded in pursuit of mandated parity? It would be remarkably contrary to the objectives of Section 629 for the Commission to shut down the only successful model for consumer use of retail devices that already exists today as a means of trying to advantages to a hypothetical new type of retail device that, if the record in this case is any indication, might never actually exist.[336]

The NPRM's second and third parity proposals are that retail apps and devices connected by the three information flows and the stripped down security system must be entitled to the same programming and entitlements as any other device or security system. As described in

---

[335] NPRM at ¶ 64 (emphasis added).

[336] Because such a device would be needed by more than only DBS provides, the FCC should not grant any special exemption from a parity rule to DBS as contemplated in ¶ 65 of the NPRM. It would be ironic and counterproductive for the Commission in the name of any "parity" rule to contravene its policy to "regulate like services in a similar manner" and create a "regulatory regime that is technology and competitively neutral," *Appropriate Framework for Broadband Access to the Internet over Wireline Facilities,* Report and Order, CC Docket Nos. 02-33, 01-337, 95-20, 98-10; WC Docket Nos. 04-242, 05-271, 20 FCC Rcd. 14853, 14878 ¶¶ 4, 45 (2005), especially in adopting Section 629 rules where the Commission's prior rules have faltered in part because they were not applied evenly to all MVPDs.

Sections IV. A., VIII. C. and VII. E., that would abrogate a content provider's rights to segment the market, experiment on some but not all platforms, and limit new services that can only be offered through a new security system which has outpaced the static mandatory interfaces and their limited security.

None of these so-called parity proposals are a "necessity in meeting the mandate of Section 629."[337] Section 629 seeks to assure that retail navigation devices are available; it does not mandate that MVPDs are bound in a straightjacket to assure that the circumstances of use of every possible device are always identical. Unnecessary restrictions upon the navigation options offered by MVPDs, such as the proposed parity rules, would violate Congress' limitation on the Commission's authority to restrict the navigation devices offered by MVPDs, and should therefore be rejected by the Commission.[338]

XII. THE PROPOSED MANDATE WOULD PROMOTE THE PRIVATE INTERESTS OF A FEW INTERNET GIANTS, NOT CONSUMER INTERESTS

The FCC set-top box mandate would not deliver consumer choice or competition. Instead, it would award a small set of companies, including a few Internet giants, a license to appropriate other parties' programming rights – and to handicap MVPD competition and innovation – while keeping their own competitive features to themselves and steering clear of any obligations. Anthony Wood, Founder and CEO of Roku, wrote that the FCC's proposal "won't help consumers, who will likely see prices for set-top boxes and other streaming technology climb along with the cost of pay TV services. The regulations would, however, help

[337] NPRM at ¶ 67.

[338] Congress made clear that the Commission's regulations under Section 629 cannot prohibit MVPDs from also offering navigation devices to consumers, so long as the MVPD's charges to consumers for such devices and equipment are separately stated and not subsidized by charges for any such service.47 U.S.C. § 549(a).

companies like Google expand their reach into consumers' homes on the back of other people's content rights."[339]

The NPRM's proposal boils down to one simple proposition: this particular group of companies would break the virtuous cycle and deny MVPDs – and MVPDs alone – the competitive agility that the proponents want to keep only for themselves. The proposal would not give consumers what the NPRM promises; instead, it would condemn MVPDs to unique and discriminatory treatment, and condemn consumers to suffer the costs of its arbitrary approach and the loss of innovation that results when a market is hobbled by regulatory arbitrage and disparities.

- ***Only MVPD content would be available for third parties to slice and dice and reassemble as their own service.*** Under the proposal Netflix, Sony PlayStation Vue, and other online video providers would not be legally compelled to open up their content or programming data to others. An Amazon, Google, or Apple could put together an offering that combines their own content with MVPDs, but MVPDs couldn't do the reverse.

- ***Only MVPDs Would Be Precluded from Honoring Distribution Contracts.*** MVPDs – and MVPDs alone – would be unable to negotiate content distribution agreements that assure content providers that they could respect the terms they have negotiated for distribution. Every other market participant will be able to honor their agreements which, among other things, control the presentation of content, and craft branding, marketing and advertising in accordance with the carefully negotiated licensing agreements under which video programming is assembled and distributed in the first place. As reported in DSTAC, "MVPDs would be significantly disadvantaged if they could not enforce applicable license terms when their services are

[339] Wood, *supra* note 60.

delivered on retail devices. Without application-level enforcement or negotiated agreements, third party devices could rearrange channel or program placement, insert different advertising into or on top of programs, ignore blackout or other geographic restrictions, or use search functionalities to promote illegitimate content sources over legitimate ones."[340] MVPDs would be uniquely handicapped in negotiating for content if they cannot meet their content commitments.

- ***Only MVPDs Would Be Stripped of Competitive Features.*** MVPD content – and MVPD content alone – would be stripped of its competitive features. The live highlights, scores, statistics, standings, schedules, and fantasy leagues that MVPDs have added to compete would be stripped away from retail devices under the FCC's proposal.[341] A *cable* shop-at-home channel would be disabled from offering live interaction and buy-by-remote on an Amazon box, but *Amazon's* newly launched StyleCode Live would operate unimpaired.

- ***Only MVPDs Would Be Unable to Negotiate for Guides.*** MVPD content – and MVPD content alone – would be subject to mandatory "unified" search and "integration" into third-party guides. Amazon, Apple, Sony, and Netflix do not have to invite all devices, services and sites to incorporate selective elements of their services into another retail offering. They use apps and business-to-business licenses to protect and promote their brands. Under the FCC set-top box mandate, an Amazon, Google, Netflix, or Apple could put together a guide that combines their content with MVPDs, but MVPDs couldn't do the reverse.

- ***Only MVPDs Would Be Forced to Replace Agile Development with the Fixed Device Protocols That Have Historically Slowed Cable's Innovation.*** MVPDs – and MVPDs

[340] DSTAC Final Report at 304 (DSTAC WG4 at 169).

[341] *Id*. at 281 (DSTAC WG4 at 146).

alone – would lose the agile development that characterizes the apps-based market. Inflexible fixed device protocols historically slowed cable's innovation, and it has taken years to put the technology in place that allows MVPD updates to occur many times a month, rather than every few years. The FCC set-top box mandate would take us back in time. Cable would have to fit innovations through inflexible fixed device protocols, and even then the device manufacturer could block them.

➢ ***Only MVPDs Would Be Denied Robust and Dynamic Security Protections …*** MVPDs – and MVPDs alone – would be locked into deficient security solutions and denied the right to use robust and dynamic security protections. Every other market participant can choose from competing conditional access systems and DRM, and can offer new business models that those systems support. But under the set-top box mandate, MVPDs – and MVPDs alone – would be left with critical security elements missing and their programming, networks, and customers left exposed.

➢ ***… While Device Manufacturers and OVDs Continue to Block Competing Retail Devices and Experiences.*** Proponents of the set-top box mandate say that navigation device choice is their goal. MVPDs are already making their services available on millions of retail devices. In contrast, Google Fiber TV offers no separable security and no apps for Amazon Fire. Amazon does not make its Prime video service available to Apple TV or Chromecast, and it fiercely resisted opening up the trusted environment it uses in Kindle to any third party.[342]

[342] *See* Transcript of Jul. 7, 2015 DSTAC meeting at 37-38 (Mr. Chaboud [from Amazon]: "when we make a device the code that runs in the trusted execution environment on that device is our code or code from the SOC vendor and that's it, right. And the reason we do that is because we put very critical keys for DRM in that context that would be accessible by any code running in that context. So if we were to run code from a third party they would have access to our entire sort of critical DRM and provisioning keys and it would compromise our security. So that won't happen."). *See also id.* at 41 (Mr. Chaboud: "I want to make the point clear that there is no requirement that code be downloaded and executed in our trusted execution environments.").

Amazon blocks sales of competing streaming boxes from Apple and Google.[343] Google's YouTube withdrew its public API after third parties did not present its service with all the ads and features intact.[344] And Google penalizes websites that promote their apps by placing them lower in search engine results, a move called "app blocking."[345]

Instead of promoting consumer choice, the proposed rules would enable a select few companies to help themselves to the content of MVPDs while fiercely defending their own brands and offerings from competitors. Today, OVDs, MVPDs and other app developers compete in content, features, service, apps, device platforms, security and brands – and consumers benefit. The proposed set-top box mandate would pull MVPDs out of the market that has launched a cornucopia of apps-based video choices and grant a small set of self-interested players the right to free ride on the investment of MVPDs and their content suppliers.

Rather than offering a "technology and platform neutral" approach (as described in STELAR[346]), the FCC set-top box mandate would create extreme competitive disparities in the video marketplace. The CableCARD mandate made a similar mistake, dooming it to failure. It presumed that by defining a digital interface for cable, the FCC could direct the path of the entire market. But instead, cable's market eroded; nearly half of consumers subscribe to other providers such as AT&T/DIRECTV, DISH, and Verizon; consumers embraced apps, not CableCARD devices; and MVPDs and OVDs now provide customers with multichannel and online video services on millions of tablets, smartphones, gaming consoles, PCs, smart TVs and other IP-enabled devices via apps. None of these IP approaches use CableCARDs, rely on FCC

---

[343] *See supra* note 84.

[344] *See supra* note 82.

[345] *See* Benner and Dougherty, *supra* note 82 (Oct. 18, 2015).

[346] STELAR § 106(d)(1) (2014).

technology mandates, or follow a uniform technology. The FCC set-top box mandate proposes to apply draconian rules only to MVPDs, and introduce into the next-generation of video services the same kind of competitive disparities that doomed the Commission's CableCARD mandate to failure.

XIII. APPS ARE AN EFFECTIVE, WIDELY-ADOPTED, EXPANDING MEANS FOR PROVIDING MVPD SERVICE TO RETAIL DEVICES

The wreckage that would be caused by the NPRM is eminently avoidable through the market-based apps solutions that are already delivering MVPD services to retail devices today and that are poised to grow exponentially before the NPRM's technical mandate could possibly be implemented.

When cautioning that the NPRM's proposed rules "may not be the precise way forward," Commissioner Rosenworcel astutely observed that the "most successful regulatory efforts are simple ones."[347] As described above, the NPRM's proposed regime is extraordinarily complicated. The market-based apps approach, on the other hand, is both straightforward and simple. More importantly, it is already proven to work and is popular with consumers and is successful in the market.

Apps protect programming and advertising agreements. Apps give MVPDs the tools to serve retail devices and assure compliance with their program distribution agreements that carefully define and segment rights. Many of those terms protect viewers from unexpected surprises, such as requirements that a search for a particular title will not place a family-friendly programmer's title next to an X-rated offering. Other terms protect the consumers' viewing experience, such as prohibiting inappropriate ads from being overlaid on the programming.

[347] NPRM, Statement of Commissioner Jessica Rosenworcel.

Other terms define the packaging, presentation, and protection of content. These agreements are essential to MVPDs' ability to obtain content from content providers who rely upon a trusted distribution system to protect their brands and their business. Apps also give MVPDs the tools to support the advertising that helps fund the MVPD business, and to provide an interactive and accountable ad platform that can continue to compete for those ad revenues. Apps assure that channels and services are presented as intended and that the presentation carries the content, features, brand, look and feel of the MVPD and its content providers.[348] Netflix, ESPN, Hulu, Amazon, and Sling TV are distributed via similar apps to protect their unique brands.

The NPRM faults MVPD apps for not offering all services to all devices.[349] But such distinctions are rights-driven and keep expanding as rights become available from content providers. Only five years ago, Time Warner Cable and Viacom were locked in litigation over TWC's delivery of service to an iPad.[350] Today, Time Warner Cable apps provide 300 linear channels, video-on-demand, and a TWC-supplied guide on Roku and eight other retail platforms. Comcast offers its Xfinity TV cable service on smartphones, tablets, and PCs and Macs in most of the homes in its footprint.

Apps deliver modern MVPD service. Applications enable the delivery of modern multichannel service that has evolved far beyond a simple broadcast video service. Aps provide the means for including features such as interactivity, recommendations, on-screen caller ID, voicemail notifications, pause/resume from last point viewed on different devices in the home, and many more features as they evolve in the market.

---

[348] *See* DSTAC Final Report at 40, 303 (DSTAC WG2 at 13; DSTAC WG4 at 168).

[349] NPRM at ¶¶ 18, 40 n.117, 64.

[350] *Viacom, Inc. v. Time Warner Cable, Inc.*, No. 1:2011cv02376 (S.D.N.Y. March 31, 2011).

Apps deliver a consistent experience across a consumer's many devices. With applications, consumers receive the service through a familiar interface on multiple platforms that they already own – TV, tablet, smartphone, and other video devices. Consumers can enjoy a common experience on the many devices they use to access their MVPD's service across devices, including the ability to navigate and see recent tuning history regardless of which device was used – the way it works with Netflix, Amazon, Hulu, and other video distributors.

Apps provide instant upgrades in service. The apps approach also provides consumers with automatic service and feature upgrades as service evolves, as consumers have grown accustomed to on tablets and smartphones. App updates can occur multiple times per month, permitting rapid innovation by the service provider.

Apps present service as promised. Consumers are guaranteed to receive service as advertised and as intended by the service provider. Thomas Riedl, head of Google's Android TV, considers it to be crucial for content owners and video service providers to "make sure that the content they provide to the user is displayed exactly as they broadcast it. Also in their role as app developer, they need to be able to completely control the experience. "[351] If consumers experience problems, they know where to seek help and who is responsible for responding to customer complaints. This approach also enables MVPDs to troubleshoot, diagnose, and support the customer's service.[352]

Apps include Title VI consumer protections by design. Enabling service providers to offer their own presentation and remote user interface through an app permits MVPDs to fulfill

---

[351] DSTAC Final Report at 276 (DSTAC WG4 at 141) (quoting Thomas Campbell, *Google: "Google TV has evolved into Android TV,"* IP&TV NEWS (Apr. 21, 2015), http://www.iptv-news.com/2015/04/google-google-tv-has-evolved-into-android-tv/).

[352] *See* DSTAC Final Report at 278 (DSTAC WG4 at 143).

the many consumer protections built into Title VI. Cable customers currently benefit from some of the strongest consumer privacy laws on the books – far stronger than the laws covering Internet companies like Google and Amazon. Cable operators are required to limit the number of commercials they air in programming directed to children and restrict the display of commercial or e-commerce website addresses. Cable operators carry local broadcast signals under "must carry" regulations and "retransmission consent" agreements, often on specific channels and in specific "neighborhoods" in the channel guide. Cable operators have extensive responsibilities to make their services accessible. Apps enable cable operators to fulfill these requirements on retail devices.

Apps preserve retail device differentiation. Retail devices that host apps may continue to differentiate themselves with features, functions, networks, drives, speed, look, feel and price, and may have their own top level user interface, app store, and menu structure. Android and iOS compete vigorously with their user interfaces; Nintendo, PlayStation, and Xbox have competitive user interfaces; LG, Panasonic, Samsung, Sony, and Vizio also compete with their user interfaces. All allow MVPD apps to present MVPD service as offered and branded by the MVPD. The different video apps appear as selectable apps that, once clicked, present the retail experience of that video provider in the manner selected by that provider. Tablets, smartphones, gaming consoles, PCs, smart TVs and other retail devices are clearly succeeding under this apps model.

Apps protect robust security. Apps allow cable operators and device manufacturers to choose from a competitive marketplace of sophisticated content protection technologies to stay ahead of security threats so that programmers can continue to trust cable to deliver their highest

quality programming.[353] Apps also promote competition among DRM and conditional access suppliers of security technology, enabling MVPDs to innovate rapidly in consumer offerings and in response to evolving threats from hackers. DLNA VidiPath and the HTML5 security proposal, for example, both support multiple DRM systems from Microsoft PlayReady, Adobe Access, and Apple FairPlay.[354]

Apps promote competition. The apps approach promotes competition in the manner intended by Section 629. Video distributors operate as differentiated retailers who compile bundles of programming, guides, navigation features, applications and other inputs into distinctive, branded offerings. Video providers compete by continuing to add more value for consumers and associating that value with their distinct brands of service. Apps enable video providers to further compete by expanding their reach to ever more retail devices. Each innovation by one provider spurs competitive responses by others in the market. Content providers today license programming directly to Netflix, Amazon, Sony PlayStation Vue and other online video providers,[355] many of which have also invested in their own well-received original programming. These online video providers use the same apps approach to present their services to consumers. Apps present those competitive features and allow the competition among these retail distributors to continue fueling and funding competition and innovation.

---

[353] DSTAC Final Report at 3, 87 (DSTAC Summary at 3; DSTAC WG3 at 29).

[354] The NPRM misrepresents the HTML5 security proposal made by MVPDs and content owners in DSTAC's Working Group 3. *See* NPRM at ¶¶ 54, 57. The HTML5 security proposal supports multiple DRM systems and (local) link protection in the home. The NPRM claim that the HTML5 proposal is "too rigid" is devoid of any factual support either in the NPRM or in the single comment it cites. That claim is also belied by the millions of devices that have adopted HTML5 and the market reality that apps publishers support multiple DRM systems.

[355] For example, viewers may see the current season of Modern Family through a set-top box; on retail devices through an MVPD app, Sling TV, an ABC authenticated app; over the air direct to a TV; or downloaded from iTunes, Amazon or Xbox.

Apps promote innovation. Apps support rapid innovation in business models, platforms and products. With the refresh of an app, consumers can enjoy the latest features offered by their MVPD or OVD, without awaiting industry consensus, a change in protocol, a change in the platform, or a rule change. A respected analyst forecast that apps-based "tablets rather than DVRs or videogame consoles" will be the "foundation of living room streaming.… Consumers are steadily evolving toward a new paradigm of video consumption based on app stores, device home screens (that show multiple apps), app home screens (that show featured content) …."[356] Apps also afford MVPDs and CE manufacturers the flexibility to pursue other business-to-business agreements, such as those governing TiVo's search of the Netflix library; an Xbox One user interface designed to be familiar to Time Warner Cable subscribers and to Xbox users; the integration of Microsoft Kinect voice and gesture control into the TWC user interface; the development of a TWC grid guide for Roku, and Comcast's announced development of an HTML5 app.[357] The continued development of these rapidly evolving marketplace solutions would only be impeded by a regulatory mandate.

Consumers love apps on their smartphones, and many are now embracing them for streaming Pay-TV content. The exponential growth in the use of apps to watch television is well underway and will continue.

---

[356] *Tablets – not DVRs or Game Consoles – Will Be at Heart of Streaming TV Boxes, TDG Analyst Says*, , COMMUNICATIONS DAILY (Sept. 24, 2015), subscription service. *See also* Daniel Frankel, *DSTAC, CableCard, Pay-TV Apps and the Future*, FIERCECABLE (Oct. 5, 2015), http://www.fiercecable.com/offer/gc_dstac?sourceform=Organic-GCDSTAC (Espelien said: "The interface between services and devices is going to be an app. This is the only approach that works across all types of devices (not just living room STB which is only a part of overall video consumption) and actually relates to the technology ecosystem as it is. Consumers have already voted with their feet in favor of this approach, so there is no point in trying to turn the clock back to the 1990s on this.").

[357] DSTAC Final Report at 40, 277 (DSTAC WG2 at 13; DSTAC WG4 at 142); Comcast DSTAC Comments at 9.

The growth of apps is fulfilling the cable industry commitment to retail. The NPRM suggests, and Chairman Wheeler has claimed specifically, that the cable industry is now opposing the retail approach they supported in 2010.[358] The 2010 NCTA letter displayed at the FCC's open meeting supports and predicts a competitive and innovative retail video device marketplace offering features *that the apps-based world is delivering today*:

- access to MVPD and Internet services on a variety of retail devices, as millions do today;
- the ability to use each MVPD provider's service through that provider's interface, as apps provide today;
- the ability to search across different content sources, as Roku and other platforms do today;
- the ability to move content among devices in the home, as home networking provides today; and
- continuous innovation and variety, which apps allow in devices, services, and networks today.

NCTA's 2010 letter urged that the Commission allow such developments to emerge using a variety of technologies and approaches developed through private sector solutions, not government technology mandates, with respect for how content providers license programming to distributors and so as not to inadvertently handicap future innovation. This is exactly what has happened with apps-based approaches after the FCC backed away from its AllVid proposal five years ago. The cable industry is still supporting – and delivering on – their 2010 commitments.

Far from being "consistent with the seven consumer principles that NCTA committed to in 2010," as the Commission claims,[359] the NPRM proposal is the exact opposite: it would

---

[358] *See* Chairman Wheeler Mar. 2, 2016 Congressional Testimony ("[H]ere's the fascinating thing about it: the cable industry was for it before they were against it. They filed with us, in 2010, saying that they wanted exactly the kind of things that we're talking about here now."); Letter from Kyle McSlarrow, President and CEO, NCTA, to Hon. Julius Genachowski, Chairman, FCC, NBP Public Notice #27; GN Docket Nos. 09-47, 09-51, 09-137; CS Docket No. 97-80 (Mar. 12, 2010).

[359] NPRM at n.43.

replace consumer and market choices with an FCC technology mandate; override the copyrights, distribution licenses, security and agreements that define how content providers distribute their content; remove each MVPD provider's user interface service and dismantles its service; and arrest innovation.

XIV. AS THE COMMISSION HAS RECOGNIZED, *CARTERFONE* AND THE TELEPHONE NETWORK ARE NOT ANALOGOUS TO THE VIDEO DEVICE MARKETPLACE

Proponents of the set-top box mandate try to sweep away these apps-based successes with the repeated incantation of *Carterfone,* but, as the Commission has recognized, the video and video device marketplace is unlike the nationally-standardized Bell System, the static POTS interface, and the Bell System's profiteering through its Western Electric division.

- ***The FCC has repeatedly found that the telephone network does not provide a proper analogy for video.*** From the beginning of its work implementing Section 629 in 1998, the Commission held that "the telephone networks do not provide a proper analogy to the issues in this [video device] proceeding due to the numerous differences in technology between Part 68 telephone networks and MVPD networks."[360]

- ***The Bell System was built to a common nationwide standard with a highly stable interface for point-to-point voice.*** Unlike MVPD networks, AT&T's telephone network was built to a common nationwide standard. It used a highly stable interface: a telephone loop with electrical characteristics that had remained essentially uniform and unchanged for a century. As the Commission said in 2010, "our telephone network was based on a nationwide standard … the interface requirement as it applies to telephone service is not completely analogous [to video

[360] First Report and Order at ¶ 39.

device attachment issues]."[361] The simple architecture of a plain-old telephone circuit, and the contrasting complex illustration of MVPD service, are illustrated in Figures 4 and 5 below.

- ***MVPD technology, facilities and services are widely varied and rapidly evolving, and distribute licensed content with contractual, copyright and security controls.*** At the service level, the telephone loop was used for well-defined and relatively simple "plain old telephone service" – a common carrier point-to-point service between two customers with no third-party content requiring content protection. By contrast, MVPD services are much more complex than those at issue in *Carterfone*, both technically and because they distribute licensed commercial content with extensive contractual, copyright and security requirements. The simple architecture of a plain-old telephone circuit, and the contrasting complex illustration of MVPD service, are illustrated in Figures 4 and 5 below:

[361] *Video Device Competition; Implementation of Section 304 of the Telecommunications Act of 1996: Commercial Availability of Navigation Devices; Compatibility Between Cable Systems and Consumer Electronics Equipment*, FCC 10-60, Notice of Inquiry, MB Docket No. 10-91; CS Docket No. 97-80; PP Docket No. 00-67, 25 FCC Rcd 4275 ¶¶ 19, 21 (2010). The standardized telephone network used a highly static interface that had remained essentially uniform and unchanged for a century. By contrast, MVPD services are very complex, and distribute licensed commercial content with extensive contractual, copyright and security requirements.

Figure 4: Typical Circuit for Telephone, circa 1985, nearly two decades after Carterfone

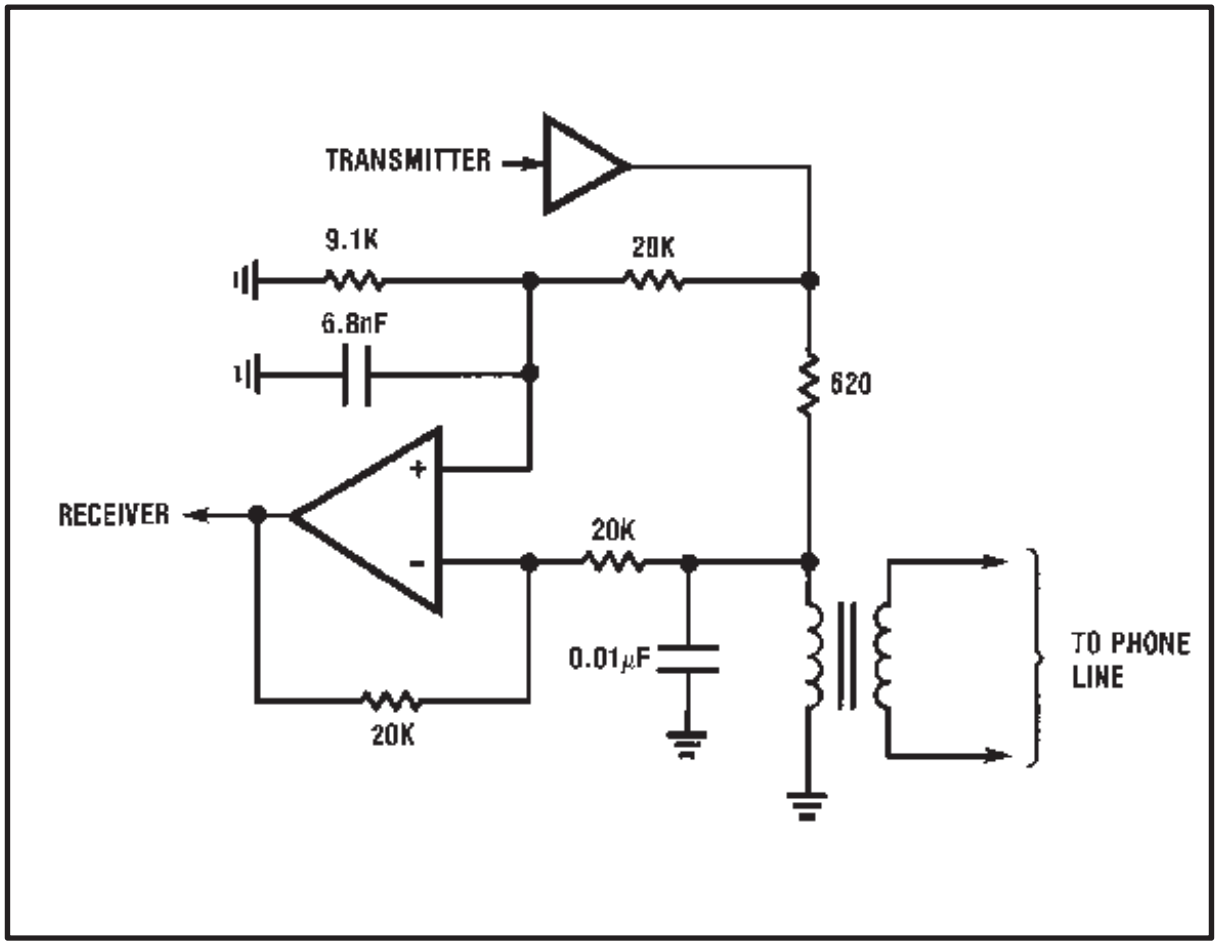

The telephone circuit had only two transistors, one transformer, five resistors, and two capacitors. A similar circuit from 1968 was even less complex and did not have transistors. Source: National Semiconductor application note "Optimum Hybrid Design," 1985.

Figure 5: Cable System Trust Architecture, 2016

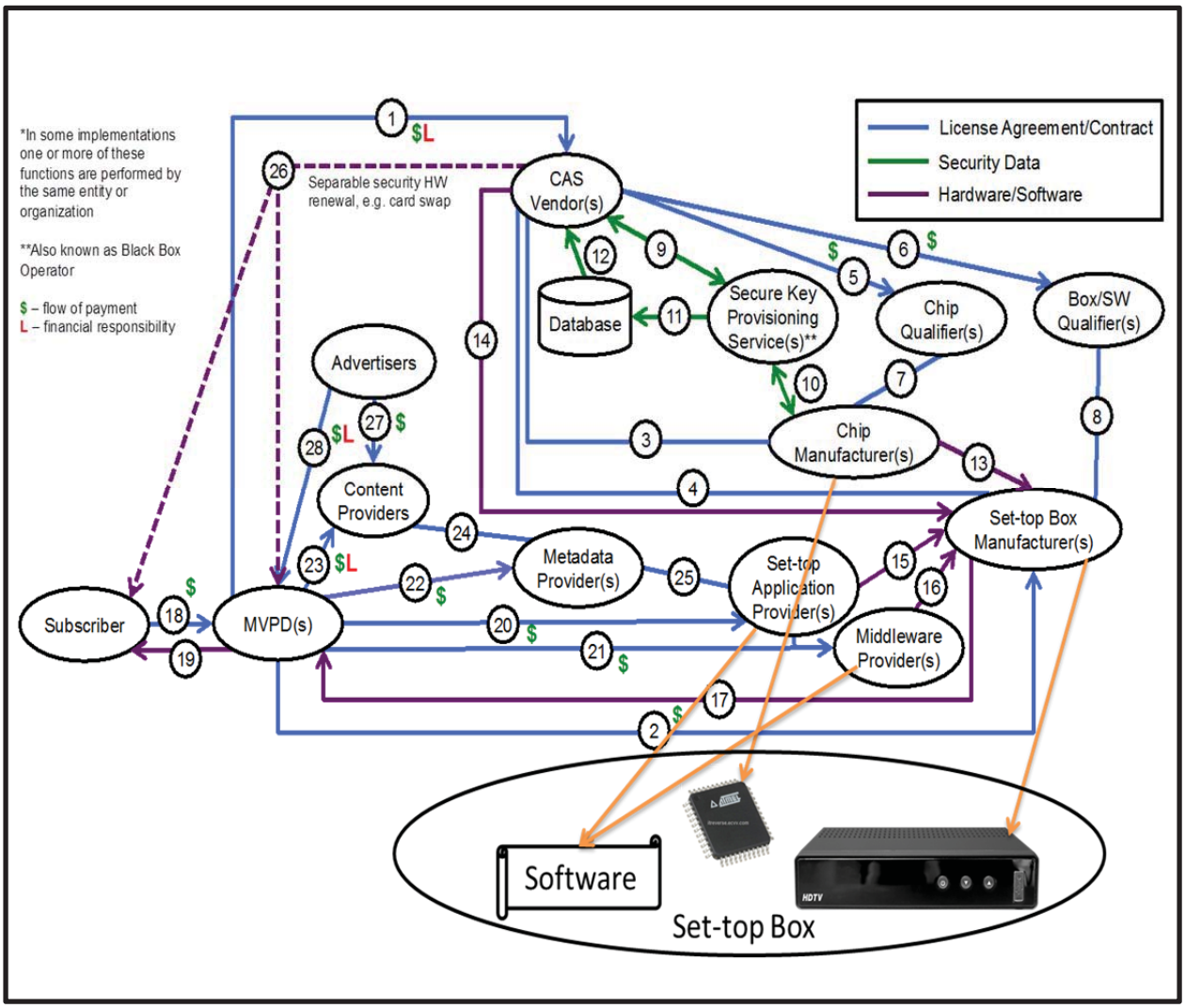

- ***Cable operators are not protecting set-top box vendors as the Bell System sought to protect its wholly-owned Western Electric equipment division.*** The Bell System sought to prevent competition to its wholly-owned Western Electric equipment division. By contrast, cable operators do not own their set-top box vendors. Cable operators like Atlantic Broadband, Cable ONE, GCI, Mediacom, Midcontinent, and Suddenlink buy their set-top boxes from TiVo.

- ***Cable operators are paying for, not profiteering on, set-top boxes.*** Cable operators are not making a $20 billion profit from set-top box rentals.[362] Cable operators pay billions to buy set-top boxes from multiple consumer electronics manufacturers so that customers may receive their subscription service as advertised.[363] They provide discounts for packaged or promotional equipment; have invested substantially in the "apps" that enable millions of retail devices to receive service without a set-top box; and have explained to their investors their financial incentives to expand the reach of their service to more devices while reducing the capex cost of CPE.[364]

- ***Cable operators are enabling service on the strongest retail platforms that are most popular with consumers.*** MVPDs have enabled the largest, strongest, most popular platforms demanded by consumers, starting with iOS and Android and extending apps to many more platforms. Comcast is now developing an HTML5 app for an even wider array of additional retail devices.[365]

---

[362] *See supra* pp. 138-141.

[363] *Id.*

[364] *Id.*

[365] Comcast DSTAC Comments at 9.

- ***MVPD set-top boxes and apps are not static black rotary phones.*** Before *Carterfone***,** AT&T was known for a technology that had remained essentially uniform and unchanged for decades, including the black rotary telephones that it rented to consumers. Cable, satellite, and telco TV operators have produced continuous innovation in multichannel networks and service, in the equipment used to receive that service, and in the apps that can be used to receive service on millions of retail devices. This rapid innovation is a hallmark of a competitive market. The Commission has previously declined to adopt *Carterfone*-type regulations in other competitive markets, such as wireless telephone services.[366]

No one in this proceeding is arguing that consumers should not be able to use retail devices to receive cable service, but what the NPRM proposes is very different from *Carterfone*. *Carterfone* struck down AT&T's tariff that had prohibited the attachment of third-party devices to its network and had enabled the Bell System's profiteering through its Western Electric division. It did *not* give third-party device manufacturers the right to create a new derivative phone service based on a right of access to the unbundled elements of the telephone company's service.[367] The NPRM would do the opposite: MVPDs would be forced to rebuild their networks according to a new FCC set-top box mandate and give third parties the right to appropriate copyrighted commercial content and dismantle MVPD services to create an unlicensed offering to consumers. *Carterfone* was intended to enable consumers to attach *compatible* telephones; it did not grant a right to telco competitors to demand that AT&T replace or change its central

---

[366] *See Petition of Skype Communications S.A.R.L. to Confirm a Consumer's Right to Use Internet Communications Software and Attach Devices to Wireless Networks*, RM-11361, Order, DA 15-471, Apr. 16, 2015 (dismissing Skype's 2007 petition to declare that *Carterfone* applies to wireless networks).

[367] It took Congress' adoption of Section 251 to authorize limited unbundling for telecommunications services provided by a "telecommunications carrier," which the statute expressly provides "shall be treated as a common carrier." The FCC has no unbundling authority under Section 629 and common carrier regulation of cable is prohibited by Section 621(c). *See infra* p. 164.

office switches and its signaling network to become compatible with otherwise *incompatible* services and equipment that the competitor sought to offer.

XV. IMPOSITION OF THE PROPOSED MANDATE WOULD VIOLATE THE LAW AND EXCEED COMMISSION AUTHORITY

A. The Mandate Violates Section 629 and Title VI

Section 629 addresses the availability of retail devices that can receive multichannel services and other services *"offered"* and *"provided"* by MVPDs.[368] The scope of the FCC's authority is limited to assuring the commercial availability of "equipment used by consumers to access *multichannel video programming* and other services offered *over multichannel video systems*." The title of the section highlights that the provision is directed towards the equipment used to access "services *provided by multichannel video programming distributors*." It does not authorize the NPRM's proposal to promote services provided by third parties and created from the disaggregated components of MVPD services, or to provide content for software developers to turn into third-party apps decoupled from any equipment. The FCC has repeatedly ruled that Section 629 authorizes the Commission only to assure a market for retail equipment that receives *MVPD services*, not to receive some selected parts or derivative service that a CE manufacturer may wish its product to provide.[369] It has specifically ruled that a third-party guide is *not* a

---

[368] 47 U.S.C. § 549(a) (emphasis added).

[369] *See Gemstar Int'l Group, Ltd*., Memorandum Opinion and Order, CSR 5528-Z; CSR 5698-Z, 16 FCC Rcd 21531, 21542, ¶ 31 (2001) ("*Gemstar*") ("Section 629 is intended to assure the competitive availability of *equipment*, including '*converter boxes*, interactive communications *equipment*, and other *equipment* used by consumers to access multichannel video programming and other services offered over multichannel video programming systems.' The Commission has not found that the right to attach consumer electronics equipment to a cable system can be expanded to include the obligation by cable operators to carry any service that is used by such equipment, nor is the legislative history supportive of such a requirement. Indeed, the scope of Section 629 apparently was 'narrowed to include only equipment used to access services provided by multichannel video programming distributors.'" (citing S. Conf. Rep. No 104-230 at 181 (1996), footnotes omitted). First Report and Order at ¶¶ 1, 7 ("[W]e adopt rules to address the mandate expressed in Section 629 of the Communications Act to ensure the commercial availability of 'navigation devices,' the equipment used to access video programming and other services from multichannel video programming systems. The purpose of Section 629 and the rules we adopt is to expand opportunities to purchase this equipment from sources other than the service provider.").

navigation device, and consistently rejected the broad reading advanced in the NPRM.[370] The NPRM seeks to evade Congress' plain language by inventing the term "Navigable Services" as a substitute for the terms that Congress actually used to describe the services *"offered"* and *"provided"* by MVPDs. It seeks to read the word "equipment" out of the statute by removing it from context and invoking a House Report that was specifically rejected by Congress as Section 629 was narrowed to its current bounds.

The linear video programming and video-on-demand that the FCC set-top mandate seeks to extract are certainly part of "cable service," addressed in Section 629,[371] but linear and VOD have never been a ceiling on service. Section 629 calls for the commercial availability of equipment used by the cable customer to access "cable service." At the same time that it enacted Section 629, Congress amended the definition of "cable service" to expressly include the "*subscriber interaction*, if any, *which is required for the selection or use of such video programming or other programming service*"[372] "reflecting the evolution of video programming toward interactive services."[373] For cable, the "multichannel video programming and other services offered over multichannel video programming systems" to be provided under Section 629 unambiguously refers to the *entire integrated package* of services, *including* the interactive features provided by the cable operator and integral to that service.

---

[370] *See Gemstar* at ¶ 31; *Implementation of Section 304 of the Telecommunications Act of 1996; Commercial Availability of Navigation Devices*, Order on Reconsideration, CS Docket No. 97-80, 14 FCC Rcd 7596, 7601 ¶ 12 (1999) ("The objective of Section 629 is to open new competitive outlets for devices that in the past have tended to be exclusively available from or under the control of service suppliers.").

[371] Section 522 defines an MVPD to "mean[] a person such as, but not limited to, a cable operator." 47 U.S.C. § 522(13). A "cable operator" is someone who "provides cable service over a cable system" or who otherwise controls or manages such a system. *Id.* § 522(5).

[372] 47 U.S.C. § 522(6)(b) (emphasis added).

[373] S. Conf. Rep. No. 104-230 at 167 (1996) (referring to 1996 Act, § 301(a)(1)).

Congress did *not* authorize the FCC to require MVPDs either to change the nature of their services or to facilitate the reassembly of their content into different services "provided by" third parties rather than those MVPDs. Congress considered a bill that would have granted the FCC such broader authority but then rejected it in favor of the far more limited authority reflected in Section 629.[374] To make that policy choice unmistakably clear, Congress enacted Section 629(f), which expressly provides that nothing in Section 629 "shall be construed as expanding . . . any authority" of the Commission beyond pre-1996 limits.[375]

Section 624(f) of the Act expressly bars the Commission from "impos[ing] requirements regarding the provision or content of cable services, except as expressly provided in [Title VI],"[376] but the FCC set-top box mandate would impose requirements on both.

While the NPRM cites Section 624A as a source for its authority, that provision concerns Commission authority to oversee "compatibility between televisions and video cassette recorders and cable systems,"[377] a subject far afield from this proceeding, and, in any event, that provision forbids the Commission from adopting rules that "affect features, functions, protocols, and other product and service options" of cable services,[378] which the proposed rules would surely do.

---

[374] Unlike Section 629 as enacted, the House version of Section 629 would have authorized the Commission "to assure competitive availability, to consumers of telecommunications subscription services," defined to promote access not only to services "provided by" MVPDs "over" MVPD platforms, but also to third-party video and data subscription services provided "by various distribution sources" (such as today's Amazon, YouTube, Netflix or Sony PlayStation Vue). H.R. 1555, 104th Cong. § 203 (1995). Congress rejected that language in conference and replaced it with a far less sweeping provision. As the Conference Report explains, "[t]he scope of the regulations" covered by the final bill was "*narrowed* to include only equipment used to access services *provided by multichannel video programming distributors.*" H.R. Rep. No. 104-204, at 112 (1995).

[375] 47 U.S.C. § 549(f).

[376] 47 U.S.C. § 544(f).

[377] 47 U.S.C. § 544a.

[378] 47 U.S.C. § 544a(c)(2)(D).

Section 621(c) of the Act expressly prohibits rules that would impose any type of common carrier regulation on a cable operator's provision of cable services.[379] The proposed set-top box mandate would constitute common carriage regulation under *Verizon* and *Cellco* because it would "force[] [MVPDs] to offer service indiscriminately and on general terms," prohibit MVPDs from determining or influencing the MVPD content to be presented on the retail device, set a price of zero, and leave no "room for individualized bargaining and discrimination in terms," making it *per se* common carriage.[380]

Congress knows how to craft unbundling authority and withheld it from Section 629. In the same 1996 Act that adopted Section 629, Congress did order the unbundling of incumbent local exchange carrier networks in Section 251, but even then, only on precisely limited terms and on rates, terms, and conditions that are just, reasonable and nondiscriminatory.[381] When the FCC required unbundling beyond those limited terms, three times the federal courts invalidated portions of the FCC's unbundling rules. For example, courts found that the FCC overreached because it "blind[ed] itself to the availability of elements outside the incumbent's network;"[382] failed to "differentiate between those cost disparities that a new entrant in any market would be likely to face and those that arise from market characteristics 'linked (in some degree) to natural

---

[379] 47 U.S.C. § 541(c).

[380] *Verizon v. FCC*, 740 F.3d 623, 649 (D.C. Cir. 2014); *Cellco P'ship v. FCC*, 700 F.3d 534, 547-48 (D.C. Cir. 2012). Chairman Wheeler has also stated that "*network unbundling*" is the kind of "*utility style regulation*" that he has foresworn for broadband but is exactly what the FCC set-top box mandate would do for Title VI service. Prepared Remarks of FCC Chairman Tom Wheeler, The Brookings Institution (June 26, 2015), https://www.fcc.gov/document/remarks-fcc-chairman-tom-wheeler-brookings-institution; Remarks of FCC Chairman Tom Wheeler, International Institute of Communications Annual Conference (Oct. 7, 2015), https://www.fcc.gov/document/remarks-chairman-international-institute-communications-event.

[381] Rather than order maximum unbundling to spur immediate competitive entry, Congress limited the FCC's authority to require more unbundling than was necessary by requiring the FCC to consider, among other factors, whether "the failure to provide access to such network elements would impair the ability of the telecommunications carrier seeking access to provide the services that it seeks to offer." 47 U.S.C. § 251(d)(2)(B).

[382] *AT&T Corp. v. Iowa Utilities Board*, 525 U.S. 366, 389 (1999).

monopoly . . . that would make genuinely competitive provision of an element's function wasteful;'"[383] and failed to consider whether the elements were "significantly deployed on a competitive basis."[384] Congress also ordered very specific unbundling elsewhere in Title II, requiring telephone companies to provide subscriber listing information on an unbundled basis on reasonable rates, terms and conditions.[385] Congress did not simultaneously and quietly slip in new, *unlimited* authority for the Commission to require unbundling and disaggregation of MVPD services, without any contract or compensation.

Section 629(b) expressly forbids rules that would "jeopardize security" of MVPD services or "impede the rights of providers of [MVPD] services to prevent theft of [their] service." The FCC's set-top box mandate would do both.

The NPRM also contravenes Section 629 by asserting that that the FCC could treat standalone software "as a 'navigation device,' separate and apart from the hardware on which it is running."[386] In other words, MVPDs would be required to provide the new mandated "Information Flows" to any app developer even if that developer does not sell or otherwise provide any actual "equipment" to consumers. As discussed in the Legal White Paper, that construction that ignores the plain meaning of Section 629 is untenable.[387]

By needlessly carving holes in statutory privacy and other consumer protections, and punting essentials of the mandate to undefined open standards bodies with whose undefined

---

[383] *U.S. Telecom Ass'n v. FCC*, 290 F.3d 415, 427 (D.C. Cir. 2002).

[384] *U.S. Telecom Ass'n v. FCC*, 359 F.3d 554, 574, 593 (D.C. Cir. 2004).

[385] 47 U.S.C. §222(e).

[386] NPRM at ¶ 24.

[387] Legal White Paper at 21.

standards it compels compliance, the Commission exhibits just how far afield it has gone from its jurisdiction and its complete disregard for the Constitutional non-delegation doctrine.

In vacating a far less extreme set of rules, the D.C. Circuit warned the FCC in the *EchoStar* case against "unbridled" constructions of Section 629.[388] As the Court explained, the FCC's authority under section 629 is neither "unbridled" nor "as capacious as the agency suggests,"[389] and it does not encompass measures with only a "tenuous . . . connection to § 629's mandate."[390] The court dismissed as an "obvious implausibility" any claim that section 629 "empower[s] the FCC to take any action it deems useful in its quest to make navigation devices commercially available."[391]

B. The Mandate Violates the First Amendment

The Supreme Court has long recognized that the choice of programming and services by cable programmers and operators is protected editorial expression under the First Amendment.[392] The scope of that protection extends to the arrangement of programming,[393] the very arrangement that the FCC set-top box mandate would abridge by government regulation. The proposed rule would violate MVPDs' First Amendment rights by interfering with their right to exercise control over the selection and presentation of their services and *compelling* the altered presentation of their services. The set-top box mandate would also *prevent* MVPDs from

---

[388] *EchoStar Satellite L.L.C. v. FCC*, 704 F.3d 992, 997 (D.C. Cir. 2013) ("*EchoStar*").

[389] *Id.* at 997-98.

[390] *Id.* at 998.

[391] *Id.* at 1000.

[392] *See Turner Broadcasting System, Inc. v. FCC*, 512 U.S. 622, 636 (1994) ("Cable programmers and cable operators engage in and transmit speech, and they are entitled to the protection of the speech and press provisions of the First Amendment").

[393] *See Hurley v. Irish-American Gay, Lesbian and Bisexual Group of Boston*, 515 U.S. 557, 570 (1995) (likening cable channel lineup to newspaper's opinion page and advertising selections).

carrying certain messages to their customers, such as through their user interfaces and guides, applications, or advertising. Moreover, the mandate would uniquely burden certain speakers – MPVDs – while giving device manufacturers and app developers unrestricted rights to repackage and present content.

C. The Mandate Violates Copyright and Trademark Law

The proposed rules would plainly vitiate the exclusive copyrights of the content owners and the owners of programming guide data, from each of which MVPDs purchase content. It would interfere with their right to control how their original copyrighted content is published and used, enable the creation of unauthorized derivative works, and strip out technological protection measures protected by the Digital Millennium Copyright Act (DMCA), in direct conflict with the Commission's duty to implement the Communications Act … in a manner as consistent as possible" with federal policies embodied in other statutory schemes.[394]

Nor can the Commission try to sanitize its violation with a claim of fair use. Indeed, the U.S. Copyright Office has already rejected broad claims that fair use justifies such circumvention. It found that the continued growth of licensed digital distribution services provides meaningful alternatives to circumvention, that broad-based space- or format-shifting would undermine these emerging online distribution models, and that the law of fair use therefore does not sanction such broad-based circumvention. Instead, it concluded that "the policy judgments surrounding the creation of a novel exception for space- or format-shifting of copyrighted works are complex and thus best left to Congress or the courts."[395] The Commission

[394] *Storer Commc'ns, Inc. v. FCC*, 763 F.2d 436, 443 (D.C. Cir. 1985).

[395] U.S. Copyright Office, *Exemption to Prohibition on Circumvention of Copyright Protection Systems for Access Control Technologies*, 80 Fed. Reg. 65944, 65960 (Oct. 28, 2015). Moreover, as the major programmers have explained in opposing a similar proposal, "fair use" is "largely irrelevant" to the CVCC proposal: fair use is only available as a defense to end-user consumers and cannot excuse third-party commercial monetization of copyrighted

would be accorded zero deference in reaching a contrary conclusion under the Copyright Act, a statute it is not authorized to administer.[396]

MVPDs also have a protected copyright interest in the distinctive bundles of programming and additional content that comprise the service that they offer to consumers as "collective works" and "compilations" with a distinctive "look and feel" protected under copyright law.[397] The Copyright Act gives copyright holders the exclusive right to create and control "derivative works" based on their copyrighted material.[398] A CE manufacturer would violate an MVPD's statutory rights if it breaks up and recasts the MVPD's compilation of services into its own service.[399]

The proposed rule would also confuse consumers either about the source of the video service being provided or whether the MVPD sponsored or otherwise approved the use of the other video content providers' trademarks, in violation of the Lanham Act.[400]

D. The Mandate Is Arbitrary and Capricious

As discussed in more detail in the Legal White Paper, the set-top box mandate is arbitrary and capricious.[401] It conflicts with the FCC's own prior interpretations of Section 629. It is

---

works. Letter from A&E Television Networks, LLC, AMC Networks Inc., Discovery Communications, Inc., NBCUNIVERSAL, Scripps Networks Interactive, Inc., the Walt Disney Company and ESPN, Inc., Time Warner Inc., 21st Century Fox, Inc., Viacom Inc., to Marlene H. Dortch, Secretary, Federal Communications Commission, MB Docket 15-64 (Jan. 14, 2016) at 5.

[396] *See, e.g., U.S. Dep't of Homeland Sec. U.S. Customs & Border Prot. v. Fed. Labor Relations Auth.*, 751 F.3d 665, 668 (D.C. Cir. 2014) (courts "accord no deference to [an agency's] interpretation of [a] statute [it does not administer]").

[397] *See supra* note 125.

[398] *See* 17 U.S.C. § 106(2).

[399] *See supra* note 127.

[400] *See* 15 U.S.C. § 1125(a); *see also Virgin Enters., Ltd. v. Nawab,* 335 F.3d 141, 146 (2d Cir. 2003) ("claim of trademark infringement ... is analyzed under [a] familiar two-prong test[.] ... The test looks first to whether the plaintiff's mark is entitled to protection, and second to whether [the] defendant's use of the mark is likely to cause consumers confusion as to the origin or sponsorship of the defendant's goods.").

designed to fix a supposed problem for which the market has already created a solution. It reaches counter-factual conclusions without substantial evidence. It categorically rejects the apps-based approach with no reasoned explanation and ignores (and contradicts) major areas of unanimous agreement from the DSTAC – the Chairman's self-selected panel of technical experts. It ignores the entirely avoidable costs that its radical market intervention would impose, and leaves gaping legal, technical, and practical holes in its proposal.

A full discussion of these legal failings is included in the Theodore B. Olson, Helgi C. Walker, and Jack N. Goodman white paper, *The FCC's "Competitive Navigation" Mandate: A Legal Analysis of Statutory and Constitutional Limits on FCC Authority,* attached as Appendix A.

XVI. THE PROPOSED BILLING "TRANSPARENCY" RULES WOULD RESULT IN HIGHER EQUIPMENT CHARGES TO CONSUMERS

It is ironic that in the very same proposed rules that are supposedly motivated by a belief that MVPD set-top boxes cost too much, the Commission also proposes rules to try to make sure that they do not cost too little – and to make very sure that they are never offered for no cost at all. But that is exactly the negative effect that the so-called "transparency" rule would have on consumers.

The so-called "billing transparency" proposal, which in actuality is a rate regulation proposal, would increase consumer prices by prohibiting MVPDs from providing free or discounted devices.[402] Cable operators have provided free set-top boxes as a condition to FCC waivers; free tuning adaptors by FCC request; free set-top boxes as a regulatory condition to encrypting basic service; and free digital transport adaptors to ease consumer disruption from

---

[401] *See* Legal White Paper at 74-81.

[402] NPRM at ¶¶ 82-86.

going "all-digital."[403] Several MVPDs reported to Senators Markey and Blumenthal that the first box they provide to certain customers is free and others reported bundled and promotional discounts.[404] Many consumers are attracted to simplified, inclusive pricing – a practice that would be outlawed by the proposed rule.

The proposed prohibition on bundled pricing is not only unnecessary and anti-consumer, but also would contravene Congressional intent and Commission precedent. In 1998, the Commission drew a lesson from cellular and DBS deployment and spoke favorably about bundling prices in an "efficiently priced package of equipment and service" to "provide innovative service offerings to consumers quickly and effectively."[405] The Commission was correct that "in a competitive market 'there is minimal concern with below cost pricing because revenues do not emanate from monopoly profits. The subsidy provides a means to expand products and services, and the market provides a self-correcting resolution of the subsidy.'"[406] The same is true in the video market, in which MVPDs must compete intensely with each other and with OVDs to attract and retain customers. There is no demonstrated public interest need, as contemplated in the NPRM, to create new rate regulation approaches to assure that the line

---

[403] *BellSouth Interactive Media Services, LLC and BellSouth Entertainment, LLC*, Memorandum Opinion and Order, CSR-6355-Z, 19 FCC Rcd 15607 ¶ 8 (M.B. 2004); *Implementation of Section 304 of the Telecommunications Act of 1996; Commercial Availability of Navigation Devices; Compatibility Between Cable Systems and Consumer Electronics Equipment*, Third Report and Order and Order on Reconsideration, CS Docket No. 97-80; PP Docket No. 00-67, 25 FCC Rcd 14657 ¶ 14 (2010); FCC, CableCARD: Know Your Rights, https://www.fcc.gov/media/cablecard-know-your-rights (last updated Dec. 9, 2015) (telling consumers that among their "rights" is that "a second device called a 'tuning adapter' … is typically provided at no additional charge to CableCARD customers"); *Cablevision Systems Corporation's Request for Waiver of Section 76.630(a) of the Commission's Rules*, DA 10-34, Memorandum Opinion and Order, MB Docket No. 09-168, 25 FCC Rcd 134 (2010); *Basic Service Tier Encryption*, FCC 12-126, Report and Order, MB Docket No. 11-169, 27 FCC Rcd 12786 (2012); *Carriage of Digital Television Broadcast Signals: Amendment to Part 76 of the Commission's Rules*, Fifth Report and Order, CS Docket No. 98-120, 27 FCC Rcd 6529 ¶ 14 (2012) (promoting free DTAs and capping any charges at $2 as part of a new interpretation of must carry rules).

[404] *See supra* note 140.

[405] *Navigation Device First Report and Order* at ¶¶ 89, 96.

[406] NPRM at ¶ 82 (quoting *First Plug and Play Report and Order*, 13 FCC Rcd at 14812-13, ¶ 87).

itemized charges are *high enough* to encourage consumers to purchase a retail device rather than getting one for free.

Indeed, Congress made clear that concerns over equipment subsidies are moot when service markets are competitive. The FCC quoted this key point in legislative history in 1998, when it determined that the subsidy restriction does not apply to cable systems subject to effective competition:

> Mr. FAIRCLOTH. Do you also agree that the intent of this provision is that the use of rate regulated services to subsidize equipment might unfairly penalize the general ratepayer?
>
> Mr. BURNS. I agree. However, when those services are no longer rate regulated such subsidy cannot be sustained and the prohibition on bundling is no longer necessary. The bill's prohibition on bundling and subsidization no longer applies when cable rates are deregulated.[407]

Economists have long understood set-top boxes to be complements to the multichannel services they support,[408] and there is no evidence that set-top box pricing has any material effect on subscribership. In 2015, the set-top box prices of indisputably "competitive" providers ranged from zero for AT&T to $11.99 for Verizon, yet each served 5-6 million subscribers. As Dr. Wildman explains, when set-top boxes and video programming service are provided as an integrated bundle, the nominal prices for such boxes have no meaning independent of the prices

---

[407] 142 Cong. Rec. S700 (daily ed. Feb. 1, 1996).

[408] *See* Baumann & Gale Economic Analysis; R. Grigorova-Minchev and T. Hazlett, Policy-Induced Competition: The Case of Cable TV Set-Top Boxes, Minnesota Journal of Law, Science & Technology 12(1), 279-311 (2011); T. Randolph Beard, George S. Ford, Lawrence J. Spiwak and Michael Stern, Phoenix Center Policy Paper Number 41: Wobbling Back to the Fire: Economic Efficiency and the Creation of a Retail Market for Set-Top Boxes, (December 2010).

charged for the programming components.[409] The FCC has now determined that all cable operators are also presumptively subject to effective competition nationwide, but it arbitrarily assumes, without evidence, that set-top box pricing remains a critical consumer issue. The actual evidence reinforces Congress' belief that the subsidy restriction does not and need not apply.

Adopting the proposed pricing regulations is unnecessary, inconsistent with other regulations, unfriendly to consumers and contrary to Congressional instruction.[410]

XVII. THE FCC SHOULD NOT CREATE NEW REGULATORY IMBALANCES BY EXTENDING SECTION 629 RULES TO BROADBAND EQUIPMENT

In a single sentence, without any foundation in DSTAC or in the nineteen year history of Docket 97-80, the NPRM tentatively concludes that the proposed billing transparency regulation should also be applied to modems and routers, rather than only to navigation devices used to access multichannel video programming.[411] While Section 629 nominally covers "other services" offered over MVPD systems, the Commission has never applied Section 629 rules to broadband Internet access or other non-video services, and there is no basis in the record demonstrating a need to do so now. The market for Internet access devices is highly competitive, and millions of MVPD customers use retail modems and routers today.

---

[409] Economic White Paper at i and 16-17.

[410] Montgomery County proposes that the Commission impose a wide range of new rate regulations on MVPDs. The County's rate regulation proposals, however, are directly at odds with the Commission's recent finding that there is a presumption of effective competition among MVPDs and, therefore, cable operators should no longer be subject to rate regulation (and DBS providers have never been subject to such regulation). Of particular note, the Commission long ago found that there was effective competition in Montgomery County. Thus, adopting the County's current proposals would violate the Communications Act's requirement that cable operators subject to effective competition not be subject to rate regulation. Surprisingly, Montgomery County is silent on the impact that the FCC-proposed set-top box mandate would pose to local franchise obligations. Cable operators carry local Public, Educational, and Governmental Access ("PEG") channels under franchise agreements with state and local governments. Under the FCC set-top box mandate, CE device manufacturers do not consider themselves bound by these agreements and could remove or relocate PEG channels, despite local franchise agreements requiring that they be made available to consumers. The FCC set-top box mandate provides no technical or legal tools to enforce PEG carriage by these third parties.

[411] NPRM at ¶ 84.

XVIII. THE COMMISSION SHOULD CONTINUE TO RELY ON EXISTING REGULATIONS FOR CABLECARD SUPPORT

The NPRM asks whether the CableCARD support rules "should be retained,"[412] but those rules were vacated and would have to be readopted in a rulemaking, rather than simply "retained." The D.C. Circuit vacated the encoding rules and all the complementary rules, which the court considered (and which the NPRM agrees)[413] were non-severable.[414] The order vacated the original plug-and-play rules, including Rule 15.123 which defined unidirectional digital cable-ready products ("UDCPs") and Rule 76.640 which defined support for UDCPs. The 2010 CableCARD support rules referenced by the NPRM were expressly applicable only to MVPDs "subject to the requirements of [the now vacated] Section 76.640,"[415] so these rules do not apply to anyone.

There is no evidence of any regression in CableCARD support notwithstanding the elimination of those particular rules. Cable operators continue to have a duty under Rule 76.1204(a)(1) to provide separable security. Cable operators also have deployed 55 million CableCARDs in their own devices and therefore will have far more than enough incentive to ensure that they continue to work. The adoption of unnecessary rules would serve no useful purpose, and such rules could constrain innovation in the future as they become more and more outdated.[416]

---

[412] NPRM at ¶ 87.

[413] NPRM at ¶ 89 ("The Commission argued that those rules were not severable from the rest of the rules adopted in the 2003 Orders (including the rule that imposes the CableCARD standard), and therefore the D.C. Circuit vacated both of the orders.").

[414] *EchoStar Satellite L.L.C. v. FCC,* 704 F.3d 992 (D.C. Cir. 2013).

[415] *Implementation of Section 304 of the Telecommunications Act of 1996; Commercial Availability of Navigation Devices et al.*, Order on Reconsideration, CS Docket No. 97-80, PP Docket No. 00-67, CSR-7902-Z, FCC 11-7, 26 FCC Rcd 791, Appendix (2011).

[416] Regardless of whether any of the vacated CableCARD support rules are restored, the Commission should eliminate the requirement that certain cable operators submit quarterly status reports. This requirement was imposed

CONCLUSION

Dramatic changes in the market have produced innovative new multichannel and online video networks, investment in new programming and new service features, and multiple apps-based approaches bringing MVPD service to retail devices, all of which have contributed to a new Golden Age of Television. The retail marketplace today offers unprecedented and growing choices that have surpassed what the drafters of Section 629 could have imagined. Permitting this market to continue to develop and innovate will deliver MVPD services to retail devices as Section 629 intended, while securing content, protecting consumers, fostering innovation, and promoting competition.

In contrast, the FCC's proposed set-top box mandate would undermine the retail market that Section 629 is intended to advance; it would cripple the ability of MVPDs to secure content, protect consumer privacy, and meet Title VI requirements; it would undermine the critical security systems that protect programming, networks, and consumers; it would violate the Communications Act, the Copyright Act and the Constitution; it would award a small set of companies, including a few Internet giants, a license to appropriate other parties' programming rights – and to handicap MVPD competition and innovation; it would mean higher costs, more boxes, and more ads for consumers while not even providing consumers with the service for which they had paid.

The technical detail for the FCC's set-top box mandate remains pure vaporware: it imagines the invention of new interfaces, standards and protocols that would take years to develop and implement; relies on fragments of ideas that do not sustain the current models for

---

over a decade ago and appears to no longer serve any useful purpose. These reports are now largely repetitive of each other and are an administrative burden on each cable operator to gather the required information every ninety days.

distributing programming, let alone future models; and ignores the essentials of security, device authentication, testing and certification, and the chain of trust that is essential for the production and distribution of high-quality programming.

Despite the significant risks, costs, and technical and legal infirmities of the FCC's proposed set-top box mandate, the Commission seems intent on pushing it through. It has conducted no study of the cost of its proposal to consumers, to programmers or to network operators, and yet it assumes that whatever the cost, the proposed FCC set-top box mandate is worth it, even at the expense of independent and minority programmers, copyright, privacy, the environment, and consumers themselves. It has denied reasonable requests from small companies for sufficient time to study the impact of this proposal. It proposes to compel compliance within two years with the undefined standards of undefined standards bodies.

There is no need for such recklessness. Apps already make MVPD service available to retail, and enjoy widespread support from consumers, CE manufacturers and industry leaders around the world – while preserving and promoting independent innovation in networks, services, and devices. The reach of those apps only keeps growing. Rather than racing headlong into another mistake, the Commission should hit the pause button and get it right this time.

Respectfully submitted,

/s/ Neal M. Goldberg

Rick Chessen
Neal M. Goldberg
National Cable & Telecommunications Association
25 Massachusetts Avenue, N.W. – Suite 100
Washington, D.C. 20001-1431

Paul Glist
Paul Hudson
Davis Wright Tremaine LLP
1919 Pennsylvania Avenue N.W. – Suite 800
Washington, D.C. 20006-3401

April 22, 2016

APPENDICES

APPENDIX A – THE FCC'S "COMPETITIVE NAVIGATION" MANDATE: A LEGAL ANALYSIS OF STATUTORY AND CONSTITUTIONAL LIMITS ON FCC AUTHORITY
Theodore B. Olson, Helgi C. Walker, and Jack N. Goodman

APPENDIX B – A TECHNICAL ANALYSIS OF THE FCC'S NAVIGATION DEVICE PROPOSAL
Sidney Skjei

APPENDIX C – THE SCARY ECONOMICS OF THE NPRM'S NAVIGATION DEVICE RULES
Steven S. Wildman

APPENDIX D – Timeline of Cable Industry Support for CableCARDs

APPENDIX A

THE FCC'S "COMPETITIVE NAVIGATION" MANDATE: A LEGAL ANALYSIS OF STATUTORY AND CONSTITUTIONAL LIMITS ON FCC AUTHORITY

Theodore B. Olson, Helgi C. Walker, and Jack N. Goodman

THE FCC'S "COMPETITIVE NAVIGATION" MANDATE:

A LEGAL ANALYSIS OF STATUTORY AND CONSTITUTIONAL LIMITS ON FCC AUTHORITY

Jack N. Goodman
Law Offices of Jack N. Goodman
1200 New Hampshire Ave, N.W.
Washington, D.C. 20036

Theodore B. Olson
Helgi C. Walker
Howard S. Hogan
Blair A. Silver
Sarah E. Erickson-Muschko
Gibson, Dunn & Crutcher LLP
1050 Connecticut Avenue, N.W.
Washington, D.C. 20036

April 22, 2016

EXECUTIVE SUMMARY

In the Telecommunications Act of 1996 (the "1996 Act"), Congress enacted Section 629 of the Communications Act and instructed the FCC to "adopt regulations to assure the commercial availability, to consumers of multichannel video programming and other services offered over multichannel video programming systems, of converter boxes, interactive communications equipment, and other equipment used by consumers to access multichannel video programming and other services offered over multichannel video programming systems."[1]

In the ensuing two decades, technological advancement and market forces evolved to offer consumers a wide array of options for accessing video programming. In 1996, cable service was the predominant source of subscription-based video programming. But, as the FCC recently recognized, "consumers today can access video programming over multiple competing platforms, and the dominance of incumbent pay[-]TV distributors has eroded."[2]

Indeed, the video marketplace is more robust and competitive than ever—not only due to the growth of direct broadcast satellite and telco services (referred to collectively, together with cable, as "multichannel video programming distributors" ("MVPDs")), but also due to the emergence of other sources of video programming service. The explosion of online video distributors ("OVDs") and Internet-connected devices in the past five years alone has fundamentally changed where, when, and how consumers watch television.

In response to these market forces, MVPDs have been working cooperatively with manufacturers of consumer electronics ("CE") devices to develop applications-based solutions

---

[1] 47 U.S.C. § 549(a).

[2] *See Promoting the Availability of Diverse and Independent Sources of Video Programming*, 81 Fed. Reg. 10241, 10242 (Feb. 29, 2016) (Notice of Inquiry); *see also* DSTAC Report at 299, *available at* http://apps.fcc.gov/ecfs/document/view.action?id=60001515603 (citations are to the consecutively paginated version of the DSTAC Report).

("apps") for customers to enjoy their pay-TV services on a range of interactive, multi-functional devices they already own, including tablets, smartphones, game consoles, computers, smart TVs, streaming set-top boxes such as Roku, and other Internet-connected retail devices. Thus, innovation is unfolding to make the goals of Section 629 a reality: consumers can download MVPD-provided apps onto any number of retail CE devices in order to enjoy their MVPD service. Today, pay-TV apps are available on more than 460 million customer devices—more than twice the number of MVPD-leased set-top boxes in the market today.[3]

Despite these game-changing developments, the FCC recently issued a Notice of Proposed Rulemaking ("NPRM") proposing to force MVPDs to unbundle their service in order to make available their programming and other "essential" data to any third party that wishes to incorporate that MVPD material into its own, derivative service—including stand-alone software with no connection to any physical equipment.[4] The NPRM leaves the core aspects of this massive undertaking unresolved, instead relying on "open standards bodies" to sort out how the proposed rules would operate in practice.[5] With respect to the important consumer privacy protections that Congress created under Section 631, which apply only to cable operators,[6] the NPRM proposes that third parties simply self-certify that they will voluntarily honor those protections.[7] As to the critical question of compliance with the many licensing agreements between MVPDs and their content suppliers that govern programming content and the protection

---

[3] *See* DSTAC Report at 307-08; *see also* MB Docket 15-64, NCTA Comments at 15 (Oct. 8, 2015).

[4] *See Notice of Public Rulemaking and Memorandum Opinion and Order, Expanding Consumers' Video Navigation Choices; Commercial Availability of Navigation Devices* (Feb. 18, 2016) ("NPRM") ¶¶ 21-24, *published at* 81 Fed. Reg. 14033 (Mar. 16, 2016). Hereinafter, citations to the NPRM will refer to the February 18, 2016 version of the NPRM and the corresponding paragraph numbers.

[5] *See, e.g., id.* ¶ 36.

[6] *See* 47 U.S.C. § 551 (cable operators).

[7] NPRM ¶ 73.

of intellectual property rights, the NPRM blithely asserts, without providing for any enforcement mechanism, that "unaffiliated vendors . . . must respect licensing terms."[8]

As a result of these numerous shortcomings, the proposed rules would bring harmful consequences. The rules would deter MVPDs and content creators from making the substantial investments required to create high-quality content and develop innovative means of distributing it, and they would disrupt the already flourishing and rapidly advancing apps-based infrastructure that consumers have come to know, enjoy, and expect.

The proposed technology mandate is as unlawful as it is unwise. *First*, Section 629—the FCC's purported source of authority—does not authorize the proposed rules. When Congress enacted Section 629(a), it made unmistakably clear through the plain text, history, and structure of the statute that the scope of the FCC's rulemaking authority was limited to assuring the "commercial availability" of "equipment" used by "consumers" to access their *MVPDs'* service.[9] The proposed rules, however, pursue an entirely different and far broader aim: the forced unbundling of MVPD service in order to facilitate the creation of new, derivative services provided by third parties using the disaggregated components of the subscriber's MVPD service.

This is far beyond the permissible scope of Section 629. As the D.C. Circuit made abundantly clear in *EchoStar*, when it concluded that rules far less extreme than those proposed here exceeded the FCC's direct *and* ancillary authority under Section 629, that provision cannot "empower[] the FCC to take any action it deems useful in its quest to make navigation devices commercially available."[10] In fact, Congress specifically *rejected* a version of the bill calling for rules to give consumers "more choices among telecommunications subscription services arriving

---

8 *Id.* ¶ 29.

9 47 U.S.C. § 549(a).

10 *EchoStar Satellite L.L.C. v. FCC* ("*EchoStar*"), 704 F.3d 992, 1000 (D.C. Cir. 2013).

by *various distribution sources*,"[11] and instead "[t]he scope of the regulations" covered by the final legislation was "narrowed to include only *equipment* used to access services *provided by* multichannel video programming distributors."[12] And Congress certainly did not impose a silent unbundling mandate requiring MVPDs to provide their content to third-parties for their unrestricted use. As evidenced by Sections 251 and 222(e) of the 1996 Act, Congress knows how to require unbundling, and it did not do so in Section 629.

Moreover, because the proposed rules call for the removal of key components of MVPD service (such as the user guide and interface) from a third party's derivative service, they would actually *prevent* customers using third-party devices from receiving their MVPD's full service. Nothing in the rules would even require third parties to carry, as part of their derivative services, all of the video programming that MVPDs supply to them. This is flatly inconsistent with Section 629(a)'s plain statutory directive. In addition, in direct conflict with Section 629(b), the rules would jeopardize content security and impair the ability of MVPDs to prevent theft of service by forcing them to hand unaffiliated third parties the keys to a "content protection system" responsible for transmitting "the three Information Flows in their entirety"[13] and *removing* critical layers of the MVPD security infrastructure. Any possible doubt regarding the scope of Section 629 is resolved by the explicit rule of statutory construction in Section 629(f) that militates against expansive readings of the statute like those the NPRM proposes.

Second, even if the scope of Section 629(a) were ambiguous, which it is not, the proposed rules would violate other parts of the Communications Act that prohibit the FCC from regulating

---

[11] H.R. Rep. No. 104-204, at 112 (1995) ("House Report") (emphasis added).

[12] H.R. Conf. Rep. No. 104-458, at 181 (1996) ("Conference Report") (emphasis added).

[13] NPRM ¶ 58-60.

"the provision or content of cable services" absent express authorization,[14] and treating cable providers as common carriers.[15] The rules would therefore be invalid because the FCC "may not . . . utilize [its rulemaking authority] in a manner that contravenes any specific prohibition contained in the Communications Act."[16] In addition, the rules would erode the consumer privacy protections in Section 631, which applies by its plain terms only to "cable systems," as well as many other statutory obligations borne by cable operators, such as emergency alert systems ("EAS"), limits on advertising in children's programming, and closed captioning and other disability requirements. The FCC may not exercise its rulemaking authority in a way that unravels Congress's larger statutory scheme.

Third, the NPRM utterly disregards the intellectual property rights of content providers and licensed distributors in abdication of the FCC's "duty to implement the Communications Act . . . in a manner as consistent as possible" with federal policies embodied in other statutory schemes.[17] The proposed rules eviscerate copyright and trademark protections and, due to forced standardization, open up the floodgates of patent litigation in an already heavily litigated field in ways that expose the United States (and thus taxpayers) to huge liability. The FCC has neither the statutory authority to override these intellectual property rights, nor the expertise to adequately assess and deal with the massive impact of the rules on such rights.

Fourth, the FCC may not rely on any other source of authority—be it authority "ancillary" to Section 629, direct authority under another statutory provision, or other supposed ancillary powers—to override the carefully delimited boundaries of its power under Section 629.

---

[14] 47 U.S.C. § 544(f)(1).

[15] *Id.* § 541(c).

[16] *Verizon v. FCC*, 740 F.3d 623, 649 (D.C. Cir. 2014).

[17] *Storer Commc'ns, Inc. v. FCC*, 763 F.2d 436, 443 (D.C. Cir. 1985).

Again, as the D.C. Circuit made clear in *EchoStar*, the FCC may not rely on sources of authority outside of Section 629 itself "as a proxy for omnibus powers limited only by the FCC's creativity in linking its regulatory actions to the goal of commercial availability of navigation devices."[18] Here, the proposed rules are not even intended to advance the aim of commercial availability of navigation devices designed to deliver an MVPD's service but, instead, to promote stand-alone video services founded on the dismantling of the MVPD's service. Under *EchoStar*, that is several bridges too far.

The NPRM's effort to invoke Section 624A, in particular, as an alternative source of authority for the proposed rules is likewise unavailing. That provision is limited by its plain language to ensuring "compatibility between televisions and video cassette recorders and cable systems."[19] None of that consumer equipment is remotely at issue here. Moreover, Congress confined the scope of the FCC's rulemaking authority under Section 624A, even as to the relevant equipment, to "narrow technical standards that mandate a minimum degree of common design and operation, leaving all features, functions, protocols, and other product and service options for selection through open competition in the market."[20] The rules go far beyond "narrow technical standards" by mandating forced access to MVPDs' own service. Indeed, Congress amended Section 624A in the 1996 Act to affirmatively prohibit the FCC from adopting any rules that "affect features, functions, protocols, and other product and service options," except as expressly provided, which the rules would by definition do.[21]

---

[18] *EchoStar*, 704 F.3d at 999-1000.

[19] 47 U.S.C. § 544a(b)(1).

[20] *Id.* § 544a(a)(4).

[21] *Id.* § 544a(c)(2)(D).

Fifth, the proposed rules run afoul of fundamental constitutional constraints on the FCC's power. The rules would unconstitutionally delegate rulemaking authority to private standards-setting bodies and regulatory enforcement authority to a self-certification process in violation of the non-delegation doctrine. The FCC cannot lawfully outsource the linchpin of its regulatory plan to politically unaccountable and inherently biased private entities. The fact that it feels the need to do so only reinforces the point that the rules go far beyond the proper scope of Section 629. In addition, the rules would violate the First Amendment by severely burdening MVPDs' and content providers' protected speech. Because the regulations would, at the very least, raise serious constitutional questions, the canon of constitutional avoidance—not *Chevron* deference—would govern a court's analysis of the regulations, and that standard would be fatal.[22]

Finally, the proposed rules are arbitrary and capricious. As a threshold matter, the NPRM fails to adequately explain why this invasive new technology mandate, with all the legal problems and costs it would engender, is even necessary. Consumers today enjoy an ever-growing number of options to access their MVPD services, together with other sources of video programming, on a wide variety of third-party devices through the use of downloadable apps. The rules would impose tremendous costs on the industry and ultimately consumers, at tremendous risk to innovation and other societal benefits, to fix a "problem" that the market is already efficiently resolving with the apps-based approach—a solution that fully satisfies Section 629. The NPRM utterly fails to account for these massive costs, which are virtually certain to occur, in relation to the supposed benefits of the rules, which are entirely speculative. The NPRM barely mentions the efficient, effective, and obvious alternative of the apps approach.

---

[22] *See Bell Atl. Tel. Co. v. FCC*, 24 F.3d 1441, 1445 (D.C. Cir. 1994) (explaining that although "[o]rdinarily *Chevron* . . . would supply the standard for assessment of the claimed authority, . . . statutes will be construed to defeat administrative orders that raise substantial constitutional questions").

In sum, the proposed rules would not survive judicial review. They contort the limited statutory mandate of Section 629—which concerned consumers' ability to purchase set-top boxes and other equipment from independent retailers, not the creation of new video services—beyond recognition. The FCC may not rewrite Section 629 by redefining its terms and inventing new ones to suit its desire to force MVPDs to support, by forced appropriation of the components of their service, the business plans of independent service providers and apps developers. Nor may the agency create numerous problems in areas of the law where it lacks any delegated authority or expertise—such as intellectual property—and then simply throw up its hands and leave MVPDs to clean up the mess. For all these reasons, the FCC should refrain from adopting these unnecessary and patently unlawful rules.

TABLE OF CONTENTS

Page

EXECUTIVE SUMMARY i

BACKGROUND 1

A. Statutory and Regulatory History of Section 629. 1

B. The STELAR Act and DSTAC Proceedings. 4

C. The NPRM. 7

ANALYSIS 11

I. The FCC May Not Adopt the Proposed Rules Pursuant to Section 629. 12

A. The Proposed Rules Exceed the FCC's Authority Under Section 629(a). 13

1. Section 629(a)'s Limited Scope Precludes Adoption of the Proposed Rules 13

a) The Devices Envisioned by the Proposed Rules Do Not Comply with Section 629(a). 15

b) Section 629 Does Not Authorize the Unbundling of MVPD Service 17

c) The NPRM Fails to Square the Proposed Rules with the Statutory Text 19

2. The Legislative History Confirms the Limited Scope of Section 629(a). 24

3. Any Construction of Section 629(a) as Authorizing the Proposed Rules Would Conflict with Section 629(b) 26

4. Section 629(f) Resolves any Ambiguity in Favor of a Narrow Construction of Section 629(a). 29

B. The Proposed Rules Would Conflict with Other Provisions of the Communications Act. 30

1. The Proposed Rules Would Regulate the Provision and Content of Cable Services in Violation of Section 624(f). 31

2. The Proposed Rules Would Relegate Cable Operators to *Per Se* Common Carrier Status in Violation of Section 621(c) 33

TABLE OF CONTENTS
(continued)

Page

3. The Proposed Rules Would Erode the Subscriber Privacy Protections that Congress Provided in Section 631. 36

C. The Proposed Rules Would Conflict with a Wide Range of Intellectual Property Rights. 41

1. The Proposed Rules Conflict with Well-Settled Federal Copyright Protections..... 41

a) The Proposed Rules Conflict with the Anti-Circumvention Provisions of the Digital Millennium Copyright Act. 42

b) The Proposed Rules Undermine the Interests of Content Owners and Programmers..... 44

c) The Proposed Rules Require MVPDs to Give Up Their Own Copyright Interests in Works Developed to Deliver Content..... 48

2. The Proposed Rules Will Weaken Established Federal Trademark Rights and Cause Substantial Consumer Confusion..... 55

3. The Proposed Rules Would Harm Competition by Forcing MVPDs into Existing Patent Monopolies and Exposing the United States to Liability for Infringement. 59

II. No Other Source of Authority Allows the FCC to Adopt the Proposed Rules. 63

A. 624A Does Not Authorize the FCC to Adopt the Proposed Rules. 64

B. No Other Source of Rulemaking Authority Can Sustain the Proposed Rules. 65

III. No Matter What the Purported Source of Authority, the Proposed Rules Would Be Unconstitutional. 66

A. The Proposed Rules Would Impermissibly Delegate Regulatory Power to Private Entities. 66

B. The Proposed Rules Would Violate the First Amendment Rights of MVPDs and Content Providers..... 69

IV. The Proposed Rules Would Be Arbitrary and Capricious. 74

CONCLUSION..... 81

BACKGROUND

A. Statutory and Regulatory History of Section 629.

In 1996, Congress passed Section 629 of the Communications Act for a straightforward purpose: to foster competition and consumer choice among manufacturers of CE equipment unaffiliated with MVPDs and to move away from the then-prevailing system in which customers rented the devices required for accessing pay-TV service directly from MVPDs. Significantly, as explained in the accompanying Conference Report, Congress rejected broader language that would have promoted the availability of video programming from "various distribution sources."[23] Instead, "[t]he scope of the regulations" covered by the final bill was "narrowed to include only *equipment* used to access services *provided by* multichannel video programming distributors."[24]

Congress was cognizant of the risks of pursuing even this limited statutory goal at all costs. It therefore placed important limits on the FCC's authority to make rules under the statute. *First*, it included a provision warning that the FCC "shall not prescribe regulations . . . which would jeopardize security of multichannel video programming . . . or impede the legal rights of a provider of such services to prevent theft of service."[25] *Second*, it instructed that Section 629 "shall not be construed as expanding or limiting any authority that the Commission may have" under laws predating enactment of Section 629.[26]

---

[23] House Report at 112.

[24] Conference Report at 181 (emphasis added).

[25] 47 U.S.C. § 549(b).

[26] *Id.* § 549(f).

The FCC originally attempted to implement Section 629 through the so-called "CableCARD" regime.[27] It sought to reconcile the statutory goals of assuring commercial availability of navigation devices and avoiding jeopardizing content security by isolating the conditional access control features used for one-way linear cable channels ("security component") from the retail device itself. The retail device would be made commercially available through retail outlets, and the security component would be available only from the cable provider.[28] The CableCARD rules further prohibited cable companies from selling or leasing boxes containing an integrated conditional access security function.[29] Pursuant to this rule, called the "integration ban," cable companies would be required to use the same CableCARD on their own devices that they made available to third-party manufacturers.

After more than $1 billion was spent to implement the CableCARD rules, the FCC acknowledged that the rules did not produce the results that it predicted they would.[30] Despite the availability of set-top boxes and televisions equipped with the CableCARD, the overwhelming majority of cable customers continue to use traditional set-top boxes from their cable operator, and only about one percent of these devices are purchased at retail.[31]

---

[27] This regime applied only to cable companies, even though the statute governs all MVPDs.

[28] *See In the Matter of Implementation of Section 304 of the Telecommunications Act of 1996* ("1998 Order"), 13 F.C.C. Rcd. 14775, 14778-79, ¶ 8 (1998); *In the Matter of: Implementation of Section 304 of the Telecommunications Act of 1996*, 20 F.C.C. Rcd. 6794, 6795 (2005).

[29] *See* 47 C.F.R. § 76.1204(a)(1).

[30] *See In the Matter of Video Device Competition* ("AllVid NOI"), 25 F.C.C. Rcd. 4275, 4278, ¶ 10 (2010) ("Unfortunately, the Commission's efforts [to implement Section 629] to date have not led to a robustly competitive retail market for navigation devices that connect to subscription video services. Most cable subscribers continue to use the traditional set-top boxes leased from their cable operator" and "most manufacturers have abandoned the technology."); *In the Matter of Implementation of Section 304 of the Telecommunications Act of 1996*, 25 F.C.C. Rcd. 14657, 14660-61 ¶ 4 (2010) (same).

[31] *See, e.g.*, T. Randolph Beard, PhD et. al., *Wobbling Back to the Fire: Economic Efficiency and the Creation of A Retail Market for Set-Top Boxes*, 21 COMMLAW CONSPECTUS 1, 2 n.5, 9, 14 (2012).

In the period following enactment of Section 629 and implementation of the CableCARD regime, MVPD service evolved in response to technological innovation. Multichannel service was no longer simply the one-way broadcast of videos to a cable-ready television. Instead, MVPDs began to "operate as differentiated retailers who implement a variety of technologies, [and] compile bundles of programming, guides, navigation features, applications and other inputs into distinctive, branded offerings."[32] For example, DISH launched its commercial digital video recorder ("DVR") in 1999; Cablevision was the pathbreaker in cloud DVR; Comcast won an Emmy for its X-1 platform; DirecTV added live highlights, scores, statistics, standings, and schedules for all major sports, fantasy leagues, and the ability to share shows on Facebook and Twitter; AT&T developed U-Verse with instant channel change. These innovations in MVPD service delivery were accompanied by the increased availability of various new, interactive, and multifunctional CE devices, including smart phones, tablets, laptop computers, smart TVs, TV-connected devices like Roku, Apple TV, and Chromecast, and video game consoles such as PlayStation and Xbox. MVPDs, in turn, developed apps to deliver interactive service to these new retail device platforms. The CableCARD regime could not accommodate this technological change in an increasingly dynamic market, and the unidirectional CableCARD devices it produced did not take hold in the marketplace.

In 2010, recognizing the limited consumer demand for CableCARD-equipped devices, the FCC proposed a successor regime to implement Section 629. The new approach, called "AllVid," would have forced all MVPDs to establish a common interface for connection to

[32] *See* DSTAC Report at 299.

televisions, DVRs, and other smart video devices.[33] The FCC ultimately took no action on the proposal. Meanwhile, marketplace developments continued to flourish.

B. The STELAR Act and DSTAC Proceedings.

In December 2014, Congress passed the STELAR Act, which repealed the integration ban and directed the FCC Chairman to establish a working group of technical experts representing a wide range of stakeholders. This working group was tasked with producing a report recommending standards for "a *not unduly burdensome*, uniform, and technology- and platform neutral software-based downloadable *security system*."[34] As with Section 629, Congress did not adopt an expansive FCC rulemaking mandate in the STELAR Act, although one such amendment was proffered and then withdrawn by its sponsor for lack of support.[35]

To carry out the STELAR mandate, the FCC Chairman formed the "Downloadable Security Technology Advisory Committee" ("DSTAC"). DSTAC published its report on August 28, 2015. Although it was mandated only with identifying and reporting on a new *security* component, not new navigation devices, some members of the working group used the proceedings as an opportunity to resuscitate the AllVid proposal's key concepts in the so-called "competitive navigation" proposal contained in the DSTAC report.[36] The DSTAC report discussed both that proposal and the apps-based proposal, but did not endorse either approach. The summary of key issues in the DSTAC report acknowledged that reviving AllVid went

---

33 AllVid NOI, 25 FCC Rcd. at 4275, ¶ 1.

34 STELAR Act, Pub L. 113-200 § 106 (Dec. 4, 2014) (emphasis added).

35 *See* Amendment of Sen. Edward Markey to S. 2799 (2014) ("Markey Amendment") (proposing that the FCC adopt rules for a "methodology for access to a system's programming features, functions, and services"); *see also* DSTAC Report at 284 n.54 (noting that the Markey Amendment "would have assigned DSTAC an expansive mission to develop a new technology mandate for the FCC to adopt by rule" but that it was withdrawn by its sponsor for lack of support and thus did not become part of the law).

36 *See* DSTAC Report at 5-6.

beyond the congressional mandate, explaining that "STELAR gave the committee a very specific mission"; it did "not direct the committee to recommend just any performance objectives, technical capabilities, or technical standards, but only those related to designing a downloadable security system, and only to the extent that they are not unduly burdensome."[37]

Substantively, the AllVid proponents (now dubbed the "Consumer Video Choice Coalition") made clear that their competitive navigation approach would force MVPDs to offer their programming and other content and services as segregable components that equipment manufacturers could disaggregate, manipulate, and repackage with non-MVPD content into stand-alone, derivative service offerings.[38] They also staked out the position, once again, that they want disaggregated MVPD content *even* where it would conflict with the contractual conditions under which MVPDs have obtained a license to carry it. TiVo's representative stated at a DSTAC meeting that "operators have made agreements where there's not a disaggregation perhaps with the content owners, [but] that those should not necessarily apply to a third party device which should have the freedom to not be bound."[39] In a letter to the FCC, TiVo later confirmed its view that tech companies "are not and should not have to be bound to programming contracts entered into by MVPDs to which they are not party."[40] The Public Knowledge representative at the DSTAC proceedings similarly represented that "an operator might have agreed to channel numbers and channel line ups but . . . a lot of those sorts of

---

[37] *Id.* at 1.

[38] *See, e.g.*, *id.* at 316 (statement by competitive navigation proponents claiming that "[n]othing in legislation, FCC regulation, or market practice today refers to an MVPD's suite of programming and services as an *indivisible bundle, aggregate, or 'service'*" and maintaining that third parties have been "constrained" by the "inability to … integrate" their innovations "with MVPD programming and services").

[39] Transcript of March 24, 2015 DSTAC meeting at 96-97.

[40] MB Docket 15-64, Letter from Devendra T. Kumar, Counsel for TiVo Inc., to Marlene H. Dortch, Secretary, FCC at 1 (Jan. 13, 2016).

restrictions that operators have agreed to may not make any sense in a retail place."[41] Proponents further claimed that they would not be required to honor the conditions of "rightsholders or intermediaries,"[42] arguing that "[d]evice manufacturers, of course, cannot violate contracts to which they are not a party."[43] The competitive navigation proposal also largely ignored the innovation that occurred since the FCC issued the AllVid NOI, even though the DSTAC report carefully catalogued these developments.

The DSTAC report contained copious examples of how increased competition among MVPD providers on the attributes of MVPD service had fueled innovation from which consumers benefitted.[44] In addition, the DSTAC report summarized how, following issuance of the AllVid proposal, MVPDs responded to consumer demand for greater accessibility to their MVPD service by working to create and expand upon the availability of downloadable apps, which consumers could use to access their pay-TV service—together with other types of video programming service—on various retail CE devices.[45] As the DSTAC report explained, this apps-based approach furthers the objectives of Section 629 without presenting the complex legal problems created by the competitive navigation proposal; it also enables MVPDs and CE device manufacturers to accommodate rapid technological change and tailor their products to optimize the user experience in an increasingly competitive and dynamic market.[46]

---

41 Transcript of March 24, 2015 DSTAC meeting at 38-39.

42 MB Docket 15-64, Electronic Frontier Foundation Comments at 2 (Oct. 9, 2015).

43 MB Docket 15-64, Computer & Communications Industry Association Reply Comments at 10 (Nov. 9, 2015).

44 DSTAC Report at 299-300.

45 *See id.* at 207-08.

46 *Id.* at 262-65; 301-08.

Although DSTAC did not adopt a consensus recommendation, "there were major points of agreement."[47] The DSTAC parties concurred, for example, that "[i]t is not reasonable to expect that all MVPDs will re-architect their networks in order to converge on a common solution," that it "is unreasonable to expect that MVPDs will modify their access networks to converge on a single common security solution," and "that the downloaded security components need to remain in the control of the MVPD."[48]

On August 31, 2015, the FCC released a public notice seeking comment on the final DSTAC report. The comment cycle closed on November 9, 2015.

C. The NPRM.

On February 18, 2016, the FCC issued an NPRM proposing rules that would essentially implement the competitive navigation proposal discussed in the DSTAC proceedings, while largely ignoring the apps alternative and the important points of agreement in the DSTAC report.

The proposed rules call for MVPDs to unbundle their service in order to make available their video programming and other "essential" data to any third party who wishes to build derivative services using the MVPD's programming. Specifically, the rules would require MVPDs to make available "three [I]nformation [F]lows"[49] in order to permit any "entities that are not affiliated with any MVPD[,] and . . . whose products enable consumers to access multichannel video programming," to use that programming and data to "build competitive navigation devices, including [software] applications," that offer a competitive "user interface

---

[47] *Id.* at 2.

[48] *Id.* at 2-3.

[49] The three "Information Flows" consist of: (1) "service discovery," *i.e.*, "information about what programming is available to the consumer, such as the channel listing and video-on-demand lineup, and what is on those channels"; (2) "entitlements," *i.e.*, "information about what a device is allowed to do with [the] content, such as record it"; and (3) "content delivery," *i.e.*, "the video programming itself, along with information necessary to make the programming accessible to persons with disabilities." NPRM ¶ 2.

and complementary features."[50] In providing this data, MVPDs must "provide parity of access to all Navigation Devices," "must not discriminate on the basis of the affiliation of the Navigation Device," and must offer "access to the same Navigable Services with the same rights to use those Navigable Services as the MVPD affords to its own application."[51]

In an attempt to squeeze this sweeping goal into the language of Section 629, the NPRM proposes several new interpretations of various statutory terms and invents an entirely new one. *First*, the NPRM proposes to define "navigation device" broadly to include not only physical devices, but also "software (such as applications)" that are "separate and apart from [any] hardware."[52] *Second*, based on this broad construction of "navigation device," the NPRM further "propose[s] to interpret the terms 'manufacturers, retailers, and other vendors' broadly to include . . . software developers, application designers," and virtually anyone else who wishes to develop apps or other means of accessing and interacting with an MVPD's programming.[53] *Third*, the NPRM also invents a new term, "Navigable Services," which essentially consists of an MVPD's "video programming," together with "Emergency Alert System ("EAS") messages."[54] The NPRM characterizes "Navigable Services" as the "essential parts of 'multichannel video programming and other services offered over multichannel video programming systems.'"[55] The proposed rules "would require each MVPD to provide [the three Information Flows] for its 'Navigable Services' in published, transparent formats."[56] By contrast, the NPRM states that

---

50 *Id.* ¶¶ 12, 21-22.

51 *Id.* ¶ 63.

52 *Id.* ¶¶ 22, 24.

53 *Id.* ¶ 21.

54 *Id.* ¶ 26.

55 *Id.*

56 *Id.* ¶ 36.

other aspects of MVPD service, including the user guide and other "complementary features," such as "applications that include news headlines, weather information, sports scores, and social networking," would be "unnecessary to include" in these Information Flows "because that information is freely available from other sources, whereas multichannel video programming is not."[57] Thus, third-party devices would omit these critical components of MVPD service.

The NPRM leaves the core technical issues implicated by the proposed rules to be resolved by private entities referred to as "open standards bodies."[58] With respect to content security, the NPRM would require MVPDs to deploy "at least one content protection system," through which "they make available the three Information Flows in their entirety," that is "licensable on reasonable and non-discriminatory terms" and "not . . . controlled by MVPDs."[59] Third parties "will not need to seek approval, review, or testing from the MVPDs" in order to obtain access to the MVPD's Information Flows through the MVPD's content protection system.[60] The NPRM envisions that a "Trust Authority"—*i.e.*, "an entity that issues the keys that each device needs to decrypt content"[61]—would mitigate concerns related to content security arising from the transfer of MVPD data to the custody and control of unaffiliated third parties.[62]

---

[57] *Id.* ¶ 40.

[58] The NPRM leaves the exact contours of an "open standards" body unclear, defining it as a body: "(1) whose membership is open to consumer electronics [manufacturers], multichannel video programming distributors, content companies, application developers, and consumer interest organizations, (2) that has a fair balance of interested members, (3) that has a published set of procedures to assure due process, (4) that has a published appeals process, and (5) that strives to set consensus standards." *Id.* ¶ 41.

[59] *Id.* ¶ 58.

[60] *Id.* ¶ 59.

[61] *Id.* ¶ 50 n.146. Elsewhere, the NPRM proposes to define the Trust Authority as "an entity that issues *certificates* and keys used by a Navigation Device to access Navigable Services that are secured by a given [content protection system]." *Id.* ¶ 61 (emphasis added). The NPRM seeks comment on whether the term "Trust Authority" is "sufficiently clear" and whether "the entity that issues certificates [should] be the same as the one that issues keys." *Id.*

[62] The NPRM proposes to define "keys" as "the basis of all of the secure communications." *Id.* ¶ 50 n.146.

Other than specifying that the "Trust Authority" may not be "substantially controlled by an MVPD or the MVPD industry," the NPRM provides no information concerning the make-up of this entity and how it might be able to monitor and enforce compliance with security requirements and prevent theft of MVPD service.

The NPRM also invites commenters to clarify how the proposed rules would safeguard consumer protections, including the privacy protections contained in Section 631 of the Communications Act.[63] The NPRM posits that, although Section 631 and other consumer protection provisions apply only to cable providers, the proposed rules would utilize a "certification" process through which the third-party recipients of MVPD customers' data would represent that they will voluntarily honor these protections, with MVPDs apparently responsible for policing compliance.[64] Although the NPRM "assume[s] . . . that if there were a lapse, . . . the MVPD would no longer be required to enable the Information Flows,"[65] there is no proposal for any technical or legal means for MVPDs to monitor retail devices and applications, to audit what third parties are doing, or to ensure compliance. The NPRM provides that "MVPDs cannot withhold the three Information Flows if they have received such certification and do not have a good faith reason to doubt its validity."[66] The NPRM inquires whether "Open Standards Bodies or some other third-party entity" could impose certification requirements "as part of their

---

[63] 47 U.S.C. § 551.

[64] A "certificate" is defined in the proposed rules as "[a] document that certifies that a Navigation Device will honor privacy, Emergency Alert System messages, [closed captioning and other disability requirements], parental control information, and children's programming advertising limits." NPRM, Appendix A (adding 47 C.F.R. § 76.1200(l)).

[65] *Id.* ¶ 74 n.213.

[66] *Id.* ¶ 73.

regimes" and how MVPDs are supposed to ensure that they do not provide the Information Flows to uncertified devices.[67]

Similarly, the NPRM does not suggest any mechanism to protect the acknowledged intellectual property rights of MVPDs and content creators, even though it expressly recognizes the "concerns raised by MVPDs and content providers" that a competitive navigation approach would lead to breach of the terms of licensing agreements.[68] Remarkably, the proponents of that approach took the position during the DSTAC proceedings that they do not intend to honor the licensing terms governing the agreements between MVPDs and content providers and should not be required to do so.[69] Nevertheless, the FCC concluded that it "do[es] not currently have evidence that regulations are needed to address [these] concerns," and that it "do[es] not believe it is necessary . . . to propose any rules to address these issues."[70]

The NPRM proposes that this entire scheme—from standard-setting to implementation—be completed within two years from the effective date of a final order in this rulemaking.

ANALYSIS

The NPRM's burdensome and costly technology mandate would far exceed the scope of the agency's authority, sharply conflict with other provisions of the Communications Act and intellectual property law, violate the constitutional non-delegation doctrine and the First Amendment, and flout the agency's basic duty of reasoned decisionmaking. Accordingly, the proposed rules would not withstand judicial scrutiny. The Commission should abandon the ill-considered proposal in the NPRM.

---

67 *Id.* ¶¶ 74, 76.

68 *Id.* ¶ 80.

69 *See supra* Part B.

70 NPRM ¶ 80.

I. The FCC May Not Adopt the Proposed Rules Pursuant to Section 629.

When Congress enacted Section 629(a), it made unmistakably clear through the text, history, and structure of the statute that the scope of the FCC's rulemaking authority is limited to assuring the commercial availability of equipment used by consumers to access their MVPDs' service. The proposed rules do not seek to achieve this result, but instead are aimed at promoting the creation of new, third-party services derived from MVPD components. Nothing in Section 629 so much as hints that Congress meant to vest the FCC with broad powers to mandate the unbundling of MVPD service in order to enable third parties to create their own derivative services using MVPDs' disaggregated video programming content.

In any event, the FCC "may not . . . utilize [its rulemaking authority] in a manner that contravenes any specific prohibition contained in the Communications Act,"[71] and it "has a duty to implement the Communications Act . . . in a manner as consistent as possible" with federal policies embodied in other statutory schemes.[72] The proposed rules would violate provisions of the Communications Act that explicitly prohibit the FCC from regulating the provision or content of cable services absent express authority and from treating cable systems as common carriers. The rules would also dramatically undermine Congress's objective of protecting consumer privacy. Finally, the rules would place Section 629 in unnecessary and deep conflict with intellectual property laws by overriding the terms of licensing agreements, creating consumer confusion, and opening the floodgates to patent litigation that would expose the United States to vast liability.

---

[71] *Verizon*, 740 F.3d at 649.

[72] *Storer Commc'ns, Inc.*, 763 F.2d at 443.

A. The Proposed Rules Exceed the FCC's Authority Under Section 629(a).

"The FCC, like other federal agencies, literally has no power to act . . . unless and until Congress confers power upon it."[73] When the FCC does take action, it must always "stay[] within the bounds of its statutory authority" and "give effect to the unambiguously expressed intent of Congress."[74] Here, Congress has spoken—through the plain text of Section 629, the legislative history, and the statutory framework as a whole—and its message is clear: it did not intend for Section 629 to authorize the radical industry restructuring envisioned by the NPRM.[75]

1. Section 629(a)'s Limited Scope Precludes Adoption of the Proposed Rules.

By its plain language, Section 629(a) tasks the FCC with a narrow mandate: to promote the availability of third-party equipment that enables consumers to view and enjoy an MVPD's existing service. The very title of that provision makes clear the limited scope of the FCC's authority: "Commercial *consumer* availability of *equipment* used to *access* services *provided by* multichannel video programming distributors."[76] Its text likewise directs the FCC to assure the commercial availability of unaffiliated party "equipment" for use by consumers "to access multichannel video programming and other services offered over multichannel video programming systems."[77] The upshot is clear: Section 629(a) was designed to give consumers alternatives to leasing set-top boxes from their MVPDs by facilitating the availability of devices sold by unaffiliated third parties for customers to use *to access their existing MVPD service*.

---

[73] *Am. Library Ass'n. v. FCC*, 406 F.3d 689, 698 (D.C. Cir. 2005) (internal quotation marks omitted).

[74] *City of Arlington, Tex. v. FCC*, 133 S. Ct. 1863, 1868 (2013) (emphasis and internal quotation marks omitted).

[75] *See generally Chevron, U.S.A., Inc. v. Nat. Res. Def. Council, Inc.*, 467 U.S. 837, 843 n.9 (1984).

[76] 47 U.S.C. § 549(a) (emphasis added).

[77] *Id.*

Indeed, this is precisely how the FCC has read Section 629 for the past two decades. As the agency explained in prior rulemaking orders, "[t]he purpose of Section 629 . . . is to expand opportunities [for consumers] to purchase this equipment from sources other than the service provider."[78] And it has adhered to this view in the adjudicatory context. In *Gemstar*, a developer of an electronic programming guide claimed that the guide qualified as a "navigation device" and that Time Warner Cable's refusal to carry the guide over its systems and attached third-party equipment impaired the commercial availability of navigation devices, in violation of Section 629.[79] The FCC rejected these claims, emphasizing that Section 629 was limited to "assur[ing] the competitive availability of *equipment*, including '*converter boxes*, interactive communications *equipment*, and other *equipment*.'"[80] It further explained that it had *never* "found that the right to attach consumer electronics equipment to a cable system can be expanded to include the obligation by cable operators to carry any service that is used by such equipment, nor is the legislative history supportive of such a requirement."[81] Rather, "the scope of Section 629" was "narrowed to include only equipment used to access services provided by multichannel video programming distributors."[82] The D.C. Circuit has similarly recognized that Section 629 promotes third-party *equipment*, not *service*.[83]

---

[78] 1998 Order, 13 F.C.C. Rcd. at 14776, ¶ 1; *see also id.* at 14777-78, ¶ 7 ("In the [NPRM], we stated our belief that the overarching goal of this proceeding was to assure competition in the availability of set-top boxes and other customer premises equipment"); *Implementation of Section 304 of the Telecommunications Act of 1996; Commercial Availability of Navigation Devices*, Order on Reconsideration, 14 F.C.C. Rcd. 7596, 7601, ¶ 12 (1999) ("The objective of Section 629 is to open new competitive outlets for devices that have in the past tended to be exclusively available from or under the control of service suppliers.").

[79] Memorandum Opinion and Order, *Gemstar Int'l Group Ltd.*, 16 F.C.C. Rcd. 21531, 21541 ¶ 28 (2001).

[80] *Id.* at 21542 ¶ 31 (quoting 47 U.S.C. § 549(a)).

[81] *Id.*

[82] *Id.* (quoting Conference Report at 181).

[83] *See, e.g.*, *EchoStar*, 704 F.3d at 995 (explaining that Congress "added § 629 to the Communications Act" "to create separate markets for navigation devices and cable television services").

a) The Devices Envisioned by the Proposed Rules Do Not Comply with Section 629(a).

The proposed rules would go far beyond the limited scope of Section 629(a) in order to accomplish a far more ambitious and *ultra vires* objective. By requiring MVPDs to provide Information Flows containing metadata for their content and other service features to unaffiliated entities, the rules call for the creation of new, derivative third-party services that would mix and match new content with MVPDs' disaggregated video programming and replace the user interface, guide, and other features that MVPDs currently provide their customers with the third party's own.[84] Moreover, although MVPDs would be required to provide the Information Flows for all of their video programming to third parties, nothing in the rules would require third parties to include all of that programming in their derivative service.

The derivative third-party services envisioned by the proposed rules thus do not fit within the plain language of Section 629. The only service to which Section 629 relates is the service "provided by" MVPDs—and it consists of the MVPD's service *as a whole*. That service is not just bare video programming, but comprises "a complex interaction of licensed content, a variety of networks, different security and content protection measures, hardware, software, licensed metadata, diagnostics, application data synchronized with content, interactivity, user interfaces, advertising, ad reporting, audit paths, and more."[85]

Read together with the statutory definition of cable service in Section 602 of the Communications Act, there is no doubt that Section 629 contemplates that customers who purchase third-party equipment to access MVPD service will continue to receive the *entire package* of their MVPD's service. Section 629 calls for the commercial availability of

---

[84] *See* NPRM ¶¶ 5, 12, 35 n.95, 40; *see also* DSTAC Report at 281, 290, 291.

[85] DSTAC Report at 37.

equipment used to access the service "provided by" MVPDs.[86] When the MVPD is a cable operator, the service referred to by Section 629 is unquestionably "cable service." Section 602, in turn, defines "cable service" broadly to encompass "video programming," "other programming service," (*i.e.*, any other services that a cable provider "makes available to all subscribers generally"),[87] and the "*subscriber interaction*, if any, *which is required for the selection or use of such video programming or other programming service*."[88] At the same time it enacted Section 629, Congress also amended the definition of "cable service" to expressly include the "use" of interactive features, "reflecting the evolution of video programming toward interactive services."[89] Thus, with respect to cable service, the phrase "multichannel video programming and other services offered over multichannel video programming systems" contained in Section 629 unambiguously refers to the *entire integrated package* of cable service, *including* the interactive features provided by the cable operator and integral to that service.

Despite this clear statutory language, the NPRM invents an entirely new term, "Navigable Services," to describe what the FCC deems the "essential parts" of MVPD service, for which MVPDs would be required to include metadata in their Information Flows to third parties.[90] All other aspects of MVPD service, such as the MVPD's user interface, guide, and other features, would be excluded from the Information Flows and thus from a third party's

---

[86] Section 602 defines an MVPD as "a person such as, but not limited to, a cable operator." 47 U.S.C. § 522(13). A "cable operator" is someone who "provides cable service over a cable system" or who otherwise controls or manages such a system. *Id.* § 522(5).

[87] *Id.* § 522(14).

[88] *Id.* § 522(6)(b) (emphasis added); *see also* 47 C.F.R. § 76.5(ff) (adopting statutory definitions of "video programming," "other programming service," and "cable service").

[89] Conference Report at 167 (referring to 1996 Act, § 301(a)(1)).

[90] NPRM ¶ 26.

derivative service offering.[91] By calling for the creation of derivative third-party services that eliminate key aspects and features of MVPD service, while permitting third parties to block or remove others, the proposed rules would actually *prevent* access to MVPD service, an outcome that runs directly counter to Section 629(a).

As a result, the third-party navigation devices envisioned by the NPRM would not provide access to the service "provided by" the MVPD, but rather to a derivative third-party service using MVPD components. That divorces these third-party services from the text and purpose of Section 629, and the FCC has no statutory authority to promote *their* commercial availability. There is no need to do such violence to the statute when the market has already created a solution to achieve compliance with Section 629 through the proliferation of MVPD apps, which allow a variety of third-party CE devices to access the MVPD's service—as the FCC itself has recognized.[92]

b) Section 629 Does Not Authorize the Unbundling of MVPD Service.

Ultimately, the NPRM seeks to find within Section 629 a silent unbundling mandate. The proposed rules would require MVPDs to provide forced access to the "essential parts of 'multichannel video programming and other services offered over multichannel video programming systems'"[93] because such programming purportedly is not "freely available from

---

[91] *Id.* ¶ 40.

[92] *See, e.g.*, *id.* ¶ 14, n.48 (acknowledging the recent roll-out of various arrangements through which MVPDs give their customers access to multichannel video programming through applications, such as the collaborations between Roku and Time Warner Cable, and Comcast's Stream TV service).

[93] *Id.* ¶ 26.

other sources."[94] The NPRM maintains that this unbundling is "essential" to achieve the goals of Section 629.[95]

But the statute provides no support for the FCC's newfound unbundling authority. When Congress intends to authorize the FCC to take such intrusive action as mandatory unbundling to promote competing services, Congress does so in explicitly and narrowly circumscribed terms, as in Sections 251[96] and 222(e)[97] of the 1996 Act. Clearly, Congress knows how to give the FCC unbundling authority, yet nothing in Section 629(a)—enacted on the same day as these unbundling provisions—even hints at such power.[98] "Where Congress includes particular language in one section of a statute but omits it in another section of the same Act, it is generally presumed that Congress acts intentionally and purposely in the disparate inclusion or

---

[94] *Id.* ¶ 40. Curiously, the FCC ignores the fact that the programmers who license their content to MVPDs are the ultimate "sources" of the MVPD's video programming content, and that the very business purpose of MVPDs is to aggregate and distribute that content. Indeed, third parties that wish to find competitive ways of distributing video programming to consumers are free to negotiate for their own license to carry that content—just as many over-the-top providers, such as Netflix, Hulu, Sony, Sling TV, Amazon, and others have successfully done.

[95] *Id.* ¶ 12.

[96] 47 U.S.C. § 251(c)(3) (requiring local exchange carriers "to provide, to any requesting telecommunications carrier for the provision of a telecommunications service, nondiscriminatory access to network elements on an *unbundled basis*" and to "provide such *unbundled network elements* in a manner that allows requesting carriers to combine such elements in order to provide such telecommunications service") (emphasis added).

[97] *Id.* § 222(e) (requiring a telecommunications carrier, with exceptions, to "provide subscriber list information gathered in its capacity as a provider of such service on a timely and *unbundled basis*, under nondiscriminatory and reasonable rates, terms, and conditions, to any person upon request for the purpose of publishing directories in any format") (emphasis added).

[98] *See* 1996 Act, Pub. L. 104-104, §§ 101(a), 304 and 702 (Feb. 8, 1996) (adopting Section 251 and Section 222, which contain unbundling authority, and Section 629, which does not). Any reliance on *Carterfone v. AT&T*, 13 F.C.C.2d 420 (1968), would be inappropriate. There, the FCC established a right to attach third-party phone *equipment* that consumers could use to access their common-carrier phone service over the telephone company's network; it did *not* give third-party device manufacturers the right to create a new derivative phone service based on a right of access to the unbundled elements of the telephone company's service. It took Section 251 to do that. And neither *Carterfone* nor Section 251 gave telephone equipment manufacturers the right to appropriate copyrighted commercial content for unlicensed resale to consumers. *Carterfone* therefore provides no support for the type of mandate contemplated by the NPRM, and, if anything, supports the limited scope of the FCC's rulemaking authority under Section 629 as covering *equipment*, not services.

exclusion."[99] Even when Congress *has* authorized unbundling requirements, courts have strictly construed those statutory mandates in light of the extraordinary nature of forced access.[100]

The FCC's proposed interpretation of Section 629 as mandating the unbundling of MVPD service is even more implausible given that it took the FCC twenty years to discover such authority. The Supreme Court has cautioned that an agency's attempt to glean sweeping authority from a statute decades after its enactment generally indicates that the statute does not, and never did, contain the newfound delegation of authority.[101] Section 629 does not mention unbundling to promote competing services *at all*—much less with the clarity necessary to support the proposed rules. Thus, courts would likely reject the FCC's assertion that, in the very same law in which Congress carefully crafted a limited and much-debated unbundling mandate for local exchange services, it simultaneously slipped in *unlimited* unbundling authority for video programming services—only to be discovered and seized upon by the FCC twenty years later.

c) The NPRM Fails to Square the Proposed Rules with the Statutory Text.

The NPRM nevertheless attempts to shoehorn the proposed rules into Section 629 by suggesting interpretations of various terms within Section 629 that are irreconcilable with the statutory text and ultimately implausible.

---

[99] *U.S. Telecom Ass'n v. FCC*, 227 F.3d 450, 458 (D.C. Cir. 2000) (quoting *Russello v. United States*, 464 U.S. 16, 23 (1983)).

[100] *See AT&T Corp. v. Iowa Utils. Bd.*, 525 U.S. 366, 389 (1999) (vacating FCC unbundling order for exceeding scope of statutory authority); *see also, e.g.*, *U.S. Telecom Ass'n v. FCC* ("*U.S. Telecom I*"), 290 F.3d 415, 417, 422 (D.C. Cir. 2002) (same).

[101] *Util. Air Regulatory Grp. v. E.P.A.*, 134 S. Ct. 2427, 2444 (2014) ("When an agency claims to discover in a long-extant statute an unheralded power to regulate a significant portion of the American economy," courts "greet [such] announcement[s] with a measure of skepticism" because they expect "Congress to speak clearly if it wishes to assign to an agency decisions of vast economic and political significance.") (quotation marks and citation omitted).

First, the NPRM tentatively concludes that the term "navigation device" covers "both hardware and software (such as applications) employed in such devices that allow consumers to access multichannel video programming and other services offered by MVPDs."[102] To be sure, a "navigation device" can include software, such as an MVPD-provided app that can be downloaded onto various consumer-owned CE devices and used to access the video programming and services provided by the MVPD. Under this scenario, the combination of hardware (*i.e.*, the CE device) and software (*i.e.*, the MVPD app employed on the device) constitutes a "navigation device" within the meaning of Section 629 because it is being used to access the *MVPD's service*. Thus, the apps model clearly complies with the statute. But this is *not* what the "navigation devices" contemplated by the proposed rules would do. By contrast, such devices would take the naked data streams of portions of MVPD service, which exclude key aspects of MVPD service, such as their user guide and interface, and create a new, derivative service provided by the third party. That does not fall within the text of Section 629 because it would not involve "*equipment* used to access services *provided by multichannel video programming distributors*."[103] Thus, whether a "navigation device" includes "both hardware and software (including applications)" is beside the point because no combination of hardware or software can constitute a "navigation device" for Section 629 purposes if the service to which it provides access is not the service "provided by" the MVPD.

Second, the NPRM goes so far as to suggest that the FCC could treat stand-alone software "as a 'navigation device,' separate and apart from the hardware on which it is

---

[102] NPRM ¶¶ 22, 23.

[103] 47 U.S.C. § 549(a) (emphasis added).

running."[104] In other words, MVPDs would be required to provide the new mandated "Information Flows" to any app developer, even if that developer does not sell or otherwise provide any equipment to consumers. That construction of Section 629 is untenable because it reads the word "equipment" entirely out of the statute. The title of Section 629 refers to "navigation device" as shorthand for "*converter boxes*, interactive communications *equipment*, and other *equipment* used by consumers to access multichannel video programming and other services offered over multichannel video programming systems."[105] The word "navigation device" must be read in light of "the company it keeps."[106] Because "[t]he words immediately surrounding" a statutory term "cabin [its] contextual meaning,"[107] and the words Congress used to describe "navigation devices" include the words "converter boxes" and "equipment," the term "navigation device" must be read as having at least *some* relationship to a physical device.[108] Indeed, as previously explained, that is precisely how the FCC has consistently read Section 629.

---

[104] NPRM ¶ 24.

[105] *See* Memorandum Opinion and Order, *Gemstar Int'l Group Ltd.*, 16 FCC Rcd. 21531, 21542 ¶ 31 (2001) (quoting 47 U.S.C. § 549(a)) (emphasis in original).

[106] *Yates v. United States*, 135 S. Ct. 1074, 1085 (2015); *see generally id*. (explaining that courts apply "the principle of *noscitur a sociis* …to 'avoid ascribing to one word a meaning so broad that it is inconsistent with its accompanying words, thus giving unintended breadth to the Acts of Congress'").

[107] *Id.*

[108] None of the authorities the NPRM cites justify reading the word "equipment" out of the statute. *See* NPRM ¶ 22. *First*, that "set-top boxes have run software since before 1996," *id*. n.65, provides no support for concluding that Congress meant for Section 629 to cover software separate and apart from any hardware on which it runs. *Second*, the statutory definition of "telecommunications equipment," *id*. n.71, actually proves that Congress never intended the term "equipment" to mean stand-alone software. *See* 47 U.S.C. §153(52) (defining "telecommunications equipment" to mean "*equipment*, other than customer premises equipment, used by a carrier to provide telecommunications services, and includes *software integral* to such equipment (including upgrades)") (emphasis added). *Third*, STELAR provided no new rulemaking authority and did not make any changes to Section 629, much less amend it in order to create new rights for developers of stand-alone software with no connection to a physical device.

The D.C. Circuit has warned that "such abrupt shifts in policy . . . constitute 'danger signals' that the Commission may be acting inconsistently with its statutory mandate."[109]

Third, the NPRM, building on this impermissible construction of "navigation device," reasons that the "manufacturers, retailers, and other vendors" entitled to receive the newly mandated MVPD "Information Flows" include an equally overbroad list of entities: namely, "software developers, application designers, system integrators, and other such entities that are not affiliated with any MVPD."[110] Although Section 629's reference to "manufacturers, retailers, and other vendors" plainly covers those who make, and sell physical devices used by consumers to access their MVPD's service (*e.g.*, retail outlets popular at the time the statute was passed such as Circuit City and Radio Shack), the FCC now proposes to interpret these terms to force MVPDs to give their naked data streams to virtually anyone who wishes to design software or other products that enable access to a reconstituted MVPD service, even if those parties do not sell or make *any* equipment.

Finally, the NPRM disregards the FCC's existing Section 629 regulations by adopting an unreasonably strict and unsupportable reading of unaffiliated entities to mean "entities that have *no business relationship with any MVPD*."[111] Specifically, the FCC proposes to treat an entity with *any* business relationship with an MVPD as "affiliated" and thus not a legitimate source of device competition. This is a radical departure from the FCC's existing attribution rules under Section 629,[112] as well as its other attribution rules such as its broadcast attribution rules.[113] As

---

[109] *Office of Commc'n of United Church of Christ v. FCC*, 707 F.2d 1413, 1425 (D.C. Cir. 1983).

[110] NPRM ¶ 21.

[111] NPRM ¶ 23 (emphasis added).

[112] None of the criteria set forth in the existing Section 629 rules create an attributable interest based solely on the existence of a business relationship, or an agreement, with an MVPD. *See* 47 C.F.R. § 76.1200(d) (defining

(Cont'd on next page)

with its newfound understanding of "navigation device," the FCC's about-face on the attribution standard signals that it is acting outside the bounds of the statute.

In sum, the proposed rules cannot be squared with the unambiguous text of Section 629(a). Section 629 was about the commercial availability of equipment that consumers use to access the services provided by their MVPD. It was never meant to authorize the FCC to mandate the unbundling of MVPD service into components for use in the creation of new third-party services, much less to require MVPDs to subsidize the efforts of stand-alone software and apps developers. Even if the FCC believes that the scope of the mandate in Section 629 *should* be "updated" to authorize the proposed rules, "an agency may not rewrite clear statutory terms to suit its own sense of how the statute should operate."[114] Contrary to the NPRM's suggestion, "the rapidly evolving nature of MVPD and consumer electronics technology"[115] does not give the FCC license to rewrite the statute as vesting it with "omnibus powers limited only by the FCC's creativity in linking its regulatory actions to the goal of commercial availability of navigation devices."[116] "If this scheme proves unworkable, the FCC must return to Congress and seek

---

(Cont'd from previous page)

"affiliate" as "[a] person or entity that (directly or indirectly) owns or controls, is owned or controlled by, or is under common ownership or control with, another person, as defined in the notes accompanying § 76.501.").

[113] No other FCC rule even comes close to the NPRM's proposal to define an affiliate based solely on the existence of a business relationship. Under the FCC's broadcast attribution rules, an agreement between parties can create an attributable interest, but only in very limited circumstances. Specifically, where one entity owns a TV station in a given market, and either (1) provides programming and ads for more than fifteen percent of the broadcast time per week of another TV station in the same market (a local marketing agreement), or (2) sells more than fifteen percent of the advertising time per week of another TV station in the same market (a joint sales agreement), the FCC deems the stations to be under common control. *See* 47 C.F.R. § 73.3555 notes 2(j) and (k).

[114] *Util. Air Regulatory Grp.*, 134 S. Ct. at 2446.

[115] NPRM ¶ 16, n.68.

[116] *EchoStar*, 704 F.3d at 999; *see also Comcast v. FCC*, 600 F.3d 642, 661 (D.C. Cir. 2010) ("[N]otwithstanding the 'difficult regulatory problem of rapid technological change' posed by the communications industry, 'the

(Cont'd on next page)

appropriate legislation," but "[t]he Commission cannot simply ignore Congress'[s] words and attempt to write a new statute out of whole cloth."[117]

2. The Legislative History Confirms the Limited Scope of Section 629(a).

The legislative record confirms what the text of Section 629(a) makes clear: Congress intended a narrow construction of that provision confined to equipment designed to deliver an MVPD's existing services, as a whole, to its customers.

In enacting Section 629, Congress expressly considered and rejected a version of the statute that was aimed at promoting the competitive availability of services, rather than equipment. Specifically, the House version of what ultimately became Section 629(a) would have authorized the Commission "to assure competitive availability, to consumers of *telecommunications subscription services*," of third-party equipment used in connection *with such services*.[118] It also defined the key term "telecommunications subscription service" broadly to encompass "the provision directly to subscribers of *video, voice, or data services* for which a subscriber charge is made."[119] Unlike Section 629 as finally enacted, this version would have called for rules promoting access not only to services "provided by" MVPDs, but also to third-party video and data subscription services provided by a variety of distributors (such as today's Netflix, Amazon, Hulu, or television manufacturers' own video offerings). In the words of the

---

(Cont'd from previous page)

allowance of wide latitude in the exercise of delegated powers is not the equivalent of untrammeled freedom to regulate activities over which the statute fails to confer . . . Commission authority.'") (quoting *National Ass'n of Regulatory Utility Commissioners v. FCC*, 533 F.2d 601, 618 (D.C. Cir. 1976)).

[117] *W. Union Tel. Co. v. FCC*, 729 F.2d 811, 817 (D.C. Cir. 1984).

[118] H.R. 1555, 104th Cong. § 203 (1995) (emphasis added).

[119] *Id.* (emphasis added).

House Report, this bill was designed to give consumers "more choices *among telecommunications subscription services* arriving by *various distribution sources*."[120]

But that language failed in conference and was replaced with a far less ambitious provision. The Conference Report accompanying the enacted version of Section 629(a) explained that "[t]he scope of the regulations" covered by the final bill was "*narrowed* to include only equipment used to access services *provided by multichannel video programming distributors.*"[121] Consequently, the NPRM's reliance on the broader language accompanying the version of the bill that Congress *rejected* is sorely misplaced.[122] If Congress intended to give the FCC broad authority to adopt rules like those in the NPRM, designed to promote third-party "video" and "data" services "arriving by various distribution sources,"[123] it would have adopted the House language. It did not. Instead, it scrapped that version in favor of Section 629(a)'s targeted mandate to promote the commercial availability of equipment used by consumers "to access services provided by multichannel video programming distributors" alone.[124]

Thus, "[a]fter originally entertaining the possibility of providing the FCC with authority to adopt [the proposed] rules, Congress declined to do so. This silence . . . cannot be read as ambiguity resulting in delegated authority to the FCC to promulgate the disputed regulations."[125] Quite the contrary, the final language of Section 629(a)—as buttressed by the explanation in the Conference Report in which Congress *rejected* a broader mandate in favor of the existing

---

[120] House Report at 112 (emphasis added).

[121] Conference Report at 181 (emphasis added).

[122] *See* NPRM ¶ 23 (citing House Report at 112).

[123] House Report at 112.

[124] 47 U.S.C. § 549(a); *see also* Memorandum Opinion and Order, *Gemstar Intern'l Group Ltd.*, 16 F.C.C. Rcd. at 21542 ¶ 31 (relying on legislative history in construing Section 629(a) narrowly).

[125] *Motion Picture Ass'n of Am., Inc. v. FCC* ("*MPAA*"), 309 F.3d 796, 806 (D.C. Cir. 2002).

"narrow[]" one—reflects a deliberate congressional choice to confine the FCC's authority to those measures necessary to give consumers different equipment options for gaining access to their MVPD's service, not other providers' services. That legislative choice must, as matter of basic administrative law, be respected.

3. Any Construction of Section 629(a) as Authorizing the Proposed Rules Would Conflict with Section 629(b).

Any construction of Section 629(a) as authorizing the proposed rules would defy the express and categorical limits that Congress imposed on that provision in Section 629(b). It is a fundamental rule of statutory construction that "individual sections of a single statute should be construed together."[126] Section 629(b) unambiguously provides that "[t]he Commission shall not prescribe regulations under subsection (a) of this section which would jeopardize security of multichannel video programming" or "impede the legal rights of a provider of such services to prevent theft of service."[127] The proposed regulations would impermissibly do both.

First, the proposed rules would remove key layers in an MVPD's multilayered security framework designed to prevent theft of MVPD service: an MVPD's user interface and apps operating in retail devices. Indeed, the rules would effectively *require* MVPDs to compromise the integrity of their service by stripping these features and forcing MVPDs to provide naked programming metadata and content streams directly to third parties.[128] The rules thus would deprive MVPDs of the necessary exclusive control over these layers of security, throw open the doors to their service to *any and all* third parties, and leave MVPDs to hope that others will provide sufficiently secure interfaces, hardware, and applications to protect content. But

---

[126] *Erlenbaugh v. United States*, 409 U.S. 239, 244 (1972); *see also MPAA*, 309 F.3d at 801-02.

[127] 47 U.S.C. § 549(b).

[128] *See, e.g.*, NPRM ¶¶ 28, 64.

protection against theft of service, as required by Section 629, cannot be guaranteed, monitored, or policed in such an exposed system that relies on the mere hope that others—without contract or license—will protect the service, regardless of their incentive to do so. Accordingly, the rules both "jeopardize security" of MVPD service and "impede the legal rights of a provider of such services to prevent theft of service" in violation of Section 629(b).

Second, by dismantling an MVPD's security protections, the proposed rules would substantially interfere with the complex "chains of trust" that lie at the heart of the distribution and use of MVPD services. As the DSTAC report explains, "[a]ll video distributors operate within a complex system that creates a 'chain of trust' from the content supplier to the distributor to the consumer with protections in place to respect the license restrictions on the content."[129] That chain of trust is meticulously documented in the DSTAC report.[130] The layers of security protections currently in place uphold the core conditions on which this "trust model" relies, including "device licenses (which create enforceable responsibilities), chip and device testing, affiliation agreements with enforceable restrictions," and "assorted third-party beneficiary clauses providing content providers with rights of enforcement against downstream parties with whom they may have no direct contract relationship."[131] MVPDs have been able to expand their

---

[129] DSTAC Report at 33.

[130] *Id.* at 52 *et seq.*

[131] *Id.* at 35; *see also id.* at 12 ("Security and content protection for MVPD services includes support for the conditional access systems' (CAS) and Digital Rights Management (DRM) systems' trust infrastructure and model. MVPDs must follow compliance and robustness rules that help control how resistant devices must be to attack and how they manage content and related copy, retransmission, or use restrictions in order to prevent piracy and to protect content holders' rights. Protection also requires meeting content provider requirements that are part of negotiated licenses that give each party defined rights and obligations.").

service to a wide variety of retail devices by using security tools, apps, and their user interfaces to control access and permissible uses while preserving this chain of trust.[132]

The FCC's proposed rules, however, *break* that chain, outsourcing it to a "'Trust Authority' that is not substantially controlled by an MVPD or by the MVPD industry" that "issues the keys that each device needs to decrypt content."[133] Beyond the "Trust" label, the rules provide no explanation as to what that "Trust Authority" would consist of and simply assume that this ill-defined entity would be able to ensure that all concerns with respect to MVPD content security are addressed. This assumption is entirely unfounded, resting on ephemeral promises from third parties without the necessary tools to uphold the chains of trust that form the backbone of MVPD service. The NPRM even forbids an MVPD from conducting its own certification testing of devices or apps or from having any contractual or license relationship that would in any way restrict third-party behavior: third parties "will not need to seek approval, review, or testing from the MVPDs" in order to obtain access to the MVPD's Information Flows through the MVPD's content protection system.[134] By mandating that MVPDs cede control over important security links in their chain of trust to third parties—thereby creating a regulatory structure designed to *thwart* that system—the rules threaten to unravel the entire security framework upon which MVPD service is built.

The proposed rules thus would undo key security protections by forcing MVPDs to release their programming into the wild with blind faith that third parties will provide the same

---

[132] Moreover, by defining "Compliant Security System" as one that is available on reasonable and nondiscriminatory ("RAND") terms, NPRM ¶ 60, the NPRM limits the range of effective security solutions upon which MVPDs can rely. This potentially forecloses digital rights management ("DRM") and other systems that do a superior job of securing content and meeting the demands of programmers but that are licensed on commercially reasonable—though not necessarily RAND—terms.

[133] *Id.* ¶ 50 & n.146.

[134] *Id.* ¶ 59.

level of security as the more reliable distributor systems. But that is mere fantasy for devices that will be able not only to directly access these streams but to install third-party apps that could hijack those once-protected streams. In fact, third parties would have even less incentive to ensure robust security to the extent they rely on ad revenue rather than subscription fees as their key business model.

Simply put, forcing MVPDs to provide programming to device manufacturers and app developers in the form of the proposed Information Flows will eliminate critical elements of security and greatly increase the risk of piracy and illicit restreaming.[135] This is flatly inconsistent with Section 629(b)'s clear prohibition against rules that jeopardize the security of MVPD services.

4. Section 629(f) Resolves any Ambiguity in Favor of a Narrow Construction of Section 629(a).

Even if Section 629(a) were ambiguous as to the proper scope of the Commission's authority, which it is not, Section 629(f) would conclusively resolve that ambiguity in favor of a narrow construction of Section 629(a) that precludes adoption of the proposed rules.

Section 629(f) states, in no uncertain terms: "*Nothing* in [Section 629] shall be construed as *expanding* or limiting any authority that the Commission may have under law in effect" before the date of its enactment.[136] Statutory language like this "not only imposes jurisdictional limits on the power of a federal agency, but also . . . provides its own rule of statutory construction."[137]

---

[135] *See generally Am. Broad. Cos. v. Aereo, Inc.*, 134 S. Ct. 2498 (2014) (holding that restreaming of a broadcast is copyright infringement).

[136] 47 U.S.C. § 549(f) (emphasis added).

[137] *Louisiana Pub. Serv. Comm'n v. FCC*, 476 U.S. 355, 377 n.5 (1986); *see also Comcast Corp.*, 600 F.3d at 659 (holding that Section 256(c) of the Communications Act, which provides that "[n]othing in this section shall be construed as expanding or limiting any authority that the Commission may have under law in effect" before the date of enactment, prohibited the FCC from reading Section 256 "as expanding . . . any authority that the Commission otherwise has").

The rule of construction in Section 629(f) trumps any claim of *Chevron* deference to a broader interpretation of Section 629(a) as authorizing the proposed rules. Congress has not impliedly delegated any interpretive wiggle room to the Commission; instead, Congress has made crystal clear that no provision of Section 629 "shall be construed" as "expanding" the Commission's authority beyond pre-1996 limits.

Here, the only potential source of authority pre-dating the 1996 Act that the NPRM identifies is Section 624A. But, as demonstrated below, that provision does not remotely justify the rules.[138] Nor did the FCC possess any other authority, prior to 1996, to mandate unbundled access to MVPD video programming services. Section 629(f) therefore precludes the FCC from putting an enlarging gloss on its authority under subsection (a) in order to pursue the proposed rules. Because "the intent of Congress is clear, that is the end of the matter."[139]

B. The Proposed Rules Would Conflict with Other Provisions of the Communications Act.

"[T]he Commission may not, as it recognizes, utilize [its rulemaking authority] in a manner that contravenes any specific prohibition contained in the Communications Act."[140] Adoption of the proposed rules would require the FCC to ignore this fundamental principle and, instead, interpret Section 629 in a manner that contravenes express limits on its authority and undermines statutory directives contained in other provisions in the Communications Act. Whatever the scope of the agency's authority under Section 629(a), the FCC most definitely cannot violate other parts of the Act in exercising that authority.

---

[138] *See infra* Part II.A.

[139] *Chevron*, 467 U.S. at 842.

[140] *Verizon*, 740 F.3d at 649.

1. The Proposed Rules Would Regulate the Provision and Content of Cable Services in Violation of Section 624(f).

Section 624(f) bars the Commission from "impos[ing] requirements regarding the provision or content of cable services, except as expressly provided in" Title VI.[141] The proposed rules would do both, despite the absence of any express authority to do so.

First, the proposed rules would impose requirements regarding the "provision" of cable services by requiring cable providers to tailor their service to facilitate its slicing, dicing, and repackaging into new services vastly different from that originally offered by the cable operator. Indeed, the rules would, by their express terms, alter the provision of cable service by inventing a new category of so-called "Navigable Services," which consists of the components of MVPD service that must be made available on an unbundled basis to third parties.[142] The NPRM further envisions that other aspects of MVPD service would be stripped out of the third party's derivative service to MVPD customers.[143] These requirements plainly and directly affect the manner in which cable services are provided.

Second, the proposed rules would regulate the "content" of cable services. In the same ways that they would alter the "provision" of MVPD services, the rules would alter the content of MVPD's overall programming. MVPDs dedicate significant effort to compiling distinctive bundles of content and features and crafting their own service "look and feel." The rules would significantly implicate the content of the overall service packages that MVPDs provide their customers by empowering third parties to remove or replace any or all of its various components and repackage it as they see fit. Indeed, although MVPDs are required to provide naked data

---

[141] 47 U.S.C. § 544(f) (emphasis added).

[142] NPRM ¶ 26.

[143] *See id.* ¶¶ 8, 12, 15, 21, 25, 40.

streams for all of their video programming to third parties, nothing in the rules would prevent third parties from removing portions of an MVPD's complete video programming from their derivative service.

The proposed rules would even alter the content of individual programs offered by MVPDs by, for example, stripping interactive content from an MVPD's existing programming—such as sports highlights and scores, interactive advertising, news tickers, weather, and integrated social media—and replacing such content with that offered by the third party. The rules also envision removal of the MVPD's user guide and replacement with one of the third party's own creation. The NPRM explicitly presumes that third parties should be free to replace all of these aspects of MVPD service because the FCC has unilaterally determined that these are not "essential" MVPD service elements and thus can be stripped from offerings of the third party.[144]

The proposed rules would also allow third parties to remove advertisements that MVPDs and content providers place into programming and replace them with the third party's own ads. Contrary to the unsupported assumption in the NPRM that this simply won't happen,[145] the concern is well supported by real-world experience. TiVo, for example, has engaged in the practice of overlaying ads on top of broadcast signals carried on cable without a license to do so.[146] Similarly, there is nothing in the rules that would prevent a third party from devising its own prioritization arrangement through a "search" function in which prioritization is awarded to

---

[144] *See id.* ¶ 40.

[145] *See id.* ¶ 80.

[146] *See, e.g.*, MB Docket 15-64, Letter from Rick Chessen, NCTA, to Marlene H. Dortch, Secretary, FCC at 5-6 (Jan. 15, 2016) ("TiVo already repurposes cable content in dubious ways, such as by overlaying ads on top of broadcast signals carried on cable. AllVid would invite and expand such practices without limit."); MB Docket 15-64, Letter from Neal Goldberg, NCTA, to Marlene H. Dortch, Secretary, FCC at 2 (Jan. 21, 2016) ("[T]he DFAST warranty has not even sufficed for one-way services. It has not stopped TiVo from overlaying ads on top of broadcast signals carried on cable or streaming signals out of the home without license. The fact that TiVo's practices have not invited litigation may merely reflect TiVo's limited market share, rather than demonstrating the success of the DFAST model.").

those who pay the third party, regardless of the priority negotiated with the MVPD. In fact, the rules expressly contemplate that third-party devices would alter the content of MVPD service in this manner, explaining that they would offer "competition in interfaces, menus, search functions, and improved over-the-top integration."[147]

The substantial alterations to the provision and content of cable service contemplated by the proposed rules would not pass muster under established law. Even apart from the express prohibition in Section 624(f), the D.C. Circuit has invalidated FCC regulations that "significantly implicate program content."[148] In *MPAA*, the court explained that, due to First Amendment concerns, "Congress has been scrupulously clear when it intends to delegate authority to the FCC to address areas significantly implicating program content," and that, in Section 624(f) and other provisions, "Congress has imposed limitations on regulations implicating program content."[149] Based on these principles, the court held that the FCC lacked authority to require the addition of a separate audio track for the visually impaired that would provide "aural descriptions of a television program's key visual elements."[150] Because these rules implicate program content in far more substantial ways than the rule invalidated in *MPAA*, they clearly violate Section 624(f).

2. The Proposed Rules Would Relegate Cable Operators to *Per Se* Common Carrier Status in Violation of Section 621(c).

Section 621(c) of the Communications Act expressly forbids the FCC from regulating cable operators as "common carrier[s] . . . by reason of providing any cable service."[151] But the

---

[147] NPRM ¶ 17.

[148] *MPAA*, 309 F.3d at 798-99.

[149] *Id.* at 805.

[150] *Id.* at 798.

[151] 47 U.S.C. § 541(c). Indeed, the Supreme Court and the D.C. Circuit have construed the Communications Act as prohibiting the FCC from treating cable operators as common carriers in order to avoid First Amendment concerns. *See FCC v. Midwest Video Corp.*, 440 U.S. 689, 708-09 (1979) ("*Midwest Video II*") (holding that

(Cont'd on next page)

proposed rules would do precisely that by "forc[ing] [cable providers] to offer service indiscriminately" to third-party service providers, without leaving "room for individualized bargaining and discrimination in terms," and prohibiting cable operators (and other MVPDs) from determining or influencing the content to be presented via a third party's app or device.[152]

As an initial matter, and as discussed above, the proposed rules amount to an unbundling mandate.[153] And unbundling mandates—such as those contained in Sections 252 and 222(e)—are *quintessential* common-carrier regulations.[154]

Furthermore, the NPRM itself spells out the common carrier nature of the proposed rules in great detail. The rules would force cable operators to provide access—on general and nondiscriminatory terms—to the three "Information Flows" to all comers. In particular, MVPDs must "provide parity of access … to all Navigation Devices," they "must not discriminate on the basis of the affiliation of the Navigation Device," and they must offer "access to the same Navigable Services with the same rights to use those Navigable Services as the MVPD affords to its own application."[155] Such access must be provided without the "need to seek approval,

---

(Cont'd from previous page)

"[t]he Commission may not regulate cable systems as common carriers, just as it may not impose such obligations on television broadcasters" and noting "Congress'[s] stern disapproval—evidenced in [47 U.S.C. § 153]—of negation of the editorial discretion otherwise enjoyed by broadcasters and cable operators alike"); *Cablevision Sys. Corp. v. FCC*, 597 F.3d 1306, 1321-22 (D.C. Cir. 2010) ("A video programming distributor (such as Cablevision, DIRECTV, DISH, or Verizon) is constitutionally entitled to exercise editorial discretion over which stations or programs to include in its repertoire," and "[a]s a result, the Government cannot compel video programming distributors to operate like 'dumb pipes' or 'common carriers' that exercise no editorial control.") (internal quotation marks omitted); *see also infra* Part III.B.

[152] *Verizon*, 740 F.3d at 652 (quoting *Cellco P'ship v. FCC*, 700 F.3d 534, 547-48 (D.C. Cir. 2012)).

[153] *See supra* Part I.A.1.

[154] Notably, Congress placed these unbundling provisions in Title II of the Communications Act, which governs obligations applicable to "Common Carriers." *See* 47 U.S.C. Subchapter II – Common Carriers, §§ 201-276.

[155] NPRM ¶ 63.

review, or testing from the MVPDs."[156] Indeed, the NPRM would require MVPDs to continue providing parity of access to their video programming even where a third party uses that programming contrary to the terms of the MVPD's agreement with the content provider—be it the manner in which the programming is displayed or monetized, where it is located in a channel line-up, or where it comes up in search returns.

Thus, the proposed rules would turn cable operators into nothing more than wholesale conduits for the transport of "Information Flows" containing the disaggregated components of MVPD service, such as bare video programming and piece-parts of programming guides, to all comers, without any ability to negotiate the terms or conditions of service. Moreover, MVPDs would presumably be required to make these Information Flows available to third parties "at no cost."[157] As in *Verizon*, the rules at issue are materially "indistinguishable" from *Midwest Video II*[158] because they would force covered entities to give third-party service providers "access" to their programming and other services "indiscriminately and on general terms."[159]

Further, the proposed rules would impose common carrier obligations on cable operators by "'transfer[ing] control' over the content transmitted."[160] The NPRM repeatedly emphasizes that the very purpose of the rules is to deprive MVPDs of control over the manner in which their programming content is displayed by third parties to the end customer, or even whether it is displayed at all.[161] Instead, the rules would give control over the display and distribution of that

---

[156] *Id* ¶ 59.

[157] *Verizon*, 740 F.3d at 654.

[158] "*Midwest Video II*", 440 U.S. at 700-01.

[159] *Verizon*, 740 F.3d at 652 (*quoting Cellco P'ship*, 700 F.3d at 547-48).

[160] *Id.* at 655.

[161] *See, e.g.*, NPRM ¶ 28 ("unaffiliated vendors must be able to build competitive navigation devices, including applications, without first obtaining approval from MVPDs or organizations they control"); *id.* ¶¶ 58-60 (MVPDs must "make available the three Information Flows in their entirety" through a system that "must not

(Cont'd on next page)

content to third-party app designers and device manufacturers, who would be free to combine other content alongside MVPD content, as well as to replace the MVPD content with that of the third party, prior to delivery to the end user.[162] That, too, effectively "relegate[s] cable systems, *pro tanto*, to common-carrier status."[163]

In sum, the proposed rules would override the individualized terms negotiated in license agreements and force cable operators "to hold out" their products and services "indifferently" for use by third-party manufacturers and apps developers. And the rules would wrest control of content from cable providers and transfer it to unaccountable third parties to use as they see fit. Because these rules do not fall into the "gray area" of common carrier regulation but rather its hard core, the Commission's characterization of the rules would receive no deference by a reviewing court.[164] Section 621(c) precludes the use of Section 629(a) to achieve those *per se*—and thus unambiguously prohibited—common-carrier ends.

3. The Proposed Rules Would Erode the Subscriber Privacy Protections that Congress Provided in Section 631.

"[A]n agency interpretation that is 'inconsisten[t] with the design and structure of the statute as a whole' does not merit deference."[165] Here, the proposed rules would violate the privacy protections that Congress adopted in Section 631 by placing sensitive consumer data in

---

(Cont'd from previous page)

be controlled by MVPDs," and third parties receiving the MVPD's programming "will not need to seek approval, review, or testing from the MVPDs themselves"); *id.* ¶¶60-61 (explaining that the "Trust Authority" that issues access to third parties must not be "substantially controlled by any MVPD or the MVPD industry").

[162] *See id.* ¶ 17 (explaining that third parties would offer "competition in the interfaces, menus, search functions, and improved over-the-top integration").

[163] *Midwest Video II*, 440 U.S. at 700-01.

[164] *Cellco P'ship*, 700 F.3d at 547.

[165] *Util. Air Regulatory Grp.*, 134 S. Ct. at 2442; *see also Food & Drug Admin. v. Brown & Williamson Tobacco Corp.*, 529 U.S. 120, 133 (2000) ("A court must . . . interpret the statute 'as a symmetrical and coherent regulatory scheme,' and 'fit, if possible, all parts into an harmonious whole'") (internal citations omitted).

the hands of third parties over which the FCC has no regulatory authority.[166]

For decades, cable operators have been statutorily required to protect the privacy of their subscribers' personally identifiable information, such as their customers' individual viewing habits and histories. Under Section 631, cable operators are generally prohibited from "collect[ing]" or "disclos[ing] personally identifiable information concerning any subscriber without the prior written or electronic consent of the subscriber concerned and shall take such actions as are necessary to prevent unauthorized access to such information" by third parties.[167] When it comes to the disclosure of viewing information, the statute even prohibits the disclosure of that information to the FCC, as well as any other government agency, absent a court order. In addition, the statute provides subscribers with the right to obtain the personally identifiable information that is collected, learn how it has been used, and correct any misinformation.[168] Moreover, cable operators are required to destroy any information they do collect when it is no longer needed for a legitimate business purpose.[169] Finally, subscribers have a private cause of action to enforce these protections in the event of breach.[170]

Cable operators have designed their interactive services and apps to ensure compliance with these important privacy requirements so that customers receive the same privacy protections however and wherever they access their video programming. But because the NPRM would place the data streams in the direct custody of third parties that MVPDs have no ability to monitor, the proposed rules would effectively nullify these protections.

---

[166] *See* 47 U.S.C. §551; *see also id.* § 338(i) (providing similar privacy protections for subscribers of satellite television service).

[167] *Id.* §§ 551(b), (c).

[168] *Id.* §§ 551(a), (d).

[169] *Id.* § 551(e).

[170] *Id.* § 551(f).

Section 631, by its plain terms, applies only to "cable systems."[171] In tacit recognition of this basic statutory problem, the NPRM proposes to require that MVPDs authenticate and provide the three Information Flows only to developers of devices and apps who "certify" that they "will adhere to privacy protections, pass through EAS messages, and adhere to children's programming advertising limits."[172] But it then leaves key practical questions regarding this certification process unresolved, with no explanation of how those protections will be ensured or enforced. The NPRM "assume[s] . . . that if there were a lapse, . . . the MVPD would no longer be required to enable the Information Flows."[173] But the NPRM provides no technical or legal means for MVPDs to monitor retail devices and applications with respect to privacy issues, to audit third parties, or to achieve compliance. Nor does it suggest the FCC will do so. The NPRM further provides that "MVPDs cannot withhold the three Information Flows if they have received such certification and do not have a good faith reason to doubt its validity."[174] Even if MVPDs could detect a third party's breach of privacy protections, withholding Information Flows and effectively turning off service would just hurt consumers. Consumers would not only be deprived of the use of the third-party device that they presumably purchased, but would then have to either purchase yet another third-party device or lease a set-top box from the MVPD—undermining the FCC's own supposed objective in this proceeding. Moreover, when a third party breaches privacy requirements, consumers will have no redress through the private right of

---

[171] *See, e.g.*, *Klimas v. Comcast Cable Comm'ns, Inc.*, 465 F.3d 271, 273 (6th Cir. 2006) ("The plain language of [47 U.S.C.] § 551(b) indicates that its prohibition against the 'collection of personally identifiable information using [a] cable system' is not applicable to information collected from the operation of a broadband internet service, even when operated by a cable company such as Comcast, because [that provision] by its terms, applies only to a 'cable system.'"); *see also Am. Scholastic TV Programming Found. v. FCC*, 46 F.3d 1173, 1180 (D.C. Cir. 1995) (Section 631 and other provisions in Cable Act "relate solely to cable").

[172] NPRM ¶ 73.

[173] *Id.* ¶ 74 n.213.

[174] *Id.* ¶ 73.

action in federal court and statutory damages provided in Section 631, and the NPRM fails to identify any mechanism for enforcing third-party compliance with privacy protections.

The NPRM suggests that the FCC might be able to get around its obvious lack of statutory authority to impose Section 631 requirements on third parties by invoking various other public interest provisions, including the "War-Emergency Powers of the President."[175] This desperate attempt to compensate for its clear lack of statutory authority, as well as its inability to offer any details about how its proposal would actually work, is further evidence that the NPRM takes the FCC far outside the realm of its proper authority under Section 629.

Indeed, the NPRM acknowledges that the proposed rules undermine federal privacy protections, but assumes that state laws and EU protections with no applicability in the United States will somehow fill the gap.[176] But in adopting Section 631, Congress determined that existing state laws were inadequate and that "a national policy" was needed "to protect the privacy of cable subscribers" because the privacy-related issues raised "a number of federal concerns, including protection of subscribers' First, Fourth and Fifth Amendment rights."[177] Individual state laws and the laws of other countries cannot replace this national, federal policy.

Thus, aside from proposing that MVPDs, and their customers, ultimately take a device manufacturer's word for it that the manufacturer will voluntarily comply with consumer privacy protections applicable by law only to cable providers, the proposed rules offer no means of ensuring that device manufacturers or software developers will safeguard subscribers' highly sensitive personally identifiable information—nor would the Commission have the authority to enforce any breach of these "voluntary" obligations. In light of the track record of technology

---

[175] *Id.* ¶ 75 n. 216 (citing 47 U.S.C. §§ 303(a), 303(w), 544(g), 606, 613).

[176] *Id.* ¶ 77.

[177] H.R. Rep. No. 98-934, at 30.

and data-aggregation companies that have strongly supported the proposed rules, consumers have good reason for concern about their privacy rights. Google—one of the most vocal proponents of the proposed rules—is widely viewed to be the most notorious aggregator of private, personal data.[178] The FCC offers no reasoned basis for assuming that third parties, with no statutorily enforceable obligation to protect consumer data under Section 631, will comply simply because the FCC says they should.[179]

More fundamentally, by mandating the disclosure of consumer data to third parties, the proposed rules *themselves* violate Section 631's restrictions on disclosure. Entitlement Data, one of the "Information Flows" MVPDs are required to provide to third-parties under the proposed rules, reveals highly sensitive viewing data such as whether the customer subscribes to mature content. The rules would *require* MVPDs to disclose this information to unaffiliated third parties without the customer's consent, even though Section 631 prohibits such disclosures.

The NPRM's failure to comport with this fundamental part of the statutory scheme governing MVPD service is further proof that its reading of Section 629 is legally untenable.

---

[178] *See, e.g.*, Emma Brown, *Google says it tracks personal student data, but not for advertising*, WASH. POST (Feb. 16, 2016), https://www.washingtonpost.com/news/education/wp/2016/02/16/google-says-it-tracks-personal-student-data-but-not-for-advertising/; David Rosen, *The terrifying ways Google is destroying your privacy*, ALTERNET (May 20, 2012), http://www.alternet.org/story/155479/the_terrifying_ways_google_is_destroying_your_privacy.

[179] This assumption is flatly inconsistent with the FCC's conclusion, in the net neutrality context, that nothing short of "enforceable rules" would suffice to guarantee consumer privacy protections. *See generally* Jim Cicconi, *Of Double Standards And Situational Policy*, AT&T PUBLIC POLICY BLOG (Feb. 18, 2016) (noting that, despite deeming voluntary compliance with Section 631 to be adequate for purposes of the proposed rules, the Commission "rejected industry assurances of voluntary compliance with net neutrality principles"). It is also irreconcilable with Chairman Wheeler's fierce criticism of self-certification with respect to programs for affordable communications services. *See* Statement of FCC Chairman Tom Wheeler, *Re: Lifeline and Link Up Reform and Modernization*, WC Docket 11-42, *Telecommunications Carriers Eligible for Universal Service Support*, WC Docket 09-197, *Connect America Fund*, WC Docket 10-90 (June 22, 2015) (explaining that the "Lifeline" rules should be amended because the self-certification system amounts to "a fox guarding the hen house").

C. The Proposed Rules Would Conflict with a Wide Range of Intellectual Property Rights.

The proposed rules would directly conflict with the protections afforded by the Copyright Act,[180] the Lanham Act,[181] and the Patent Act,[182] in direct contravention of the Commission's "duty to implement the Communications Act . . . in a manner as consistent as possible" with federal policies embodied in other statutory schemes.[183] Because the FCC may not exercise its authority "so single-mindedly that it may wholly ignore other and equally important Congressional objectives,"[184] the proposal's sharp conflict with intellectual property law provides yet another reason to reject an expansive construction of Section 629(a).

1. The Proposed Rules Conflict with Well-Settled Federal Copyright Protections.

In carrying out its constitutional mandate to "secur[e] for limited Times to Authors . . . the exclusive Right to their respective Writings,"[185] Congress has passed and repeatedly strengthened the Copyright Act to "assure[] authors the right to their original expression."[186] That is because "Copyright has been the engine that has traditionally converted the energy of artistic creativity into publicly available arts and entertainment."[187] The FCC is not authorized to promulgate regulations that will weaken or ignore these important copyright protections.

---

[180] 17 U.S.C. § 101, *et. seq.*

[181] 15 U.S.C. § 1051, *et seq.*

[182] 35 U.S.C. § 1, *et seq.*

[183] *Storer Commc'ns, Inc.*, 763 F.2d at 443.

[184] *Can-Am Plumbing, Inc. v. N.L.R.B.*, 321 F.3d 145, 153 (D.C. Cir. 2003) (quoting *Southern S.S. Co. v. N.L.R.B.*, 316 U.S. 31, 47 (1942)).

[185] U.S. Const., art. I, § 8, cl. 8.

[186] *Feist Publ'ns, Inc., v. Rural Tel. Serv.Co.*, 499 U.S. 340, 349 (1991).

[187] S. Rep. No. 105-190, at 69 (1998) (additional views of Sen. Leahy).

a) The Proposed Rules Conflict with the Anti-Circumvention Provisions of the Digital Millennium Copyright Act.

In 1998, Congress explicitly recognized that the advent of modern communications technology has created an "unprecedented challenge to copyright protection."[188] As a result, Congress passed the Digital Millennium Copyright Act[189] ("DMCA") to "make available via the Internet the movies, music, software, and literary works that are the fruit of American creative genius" by encouraging technological solutions to copyright infringement, and by creating clear civil and criminal penalties for the technological circumvention of copyrights.[190]

The entire thrust of the NPRM, however, is to *weaken* these protections by mandating that MVPDs make copyright-protected content available to unsupervised third parties and to surrender their technological protections to future, unknown standards-setting bodies. In particular, the proposed rules not only require MVPDs to provide three Information Flows to third-party navigation devices,[191] but also require that MVPDs "offer access" to their services to those devices "with the same rights to use those [services] as the MVPD affords its own application[s]."[192] Worse, the rules would actually *prohibit* MVPDs from requiring that the makers of third-party devices "first obtain[] approval from MVPDs or organizations they control."[193] Although the NPRM purports to require these unaffiliated entities to "implement

---

188 *Id.*

189 *See* 17 U.S.C. §§ 1201-1204.

190 S. Rep. No. 105-190, at 2, 11. The DMCA further provides that "[n]o person shall circumvent a technological measure that effectively controls access to a work protected under" copyright law and creates both criminal and civil liability for breach. 17 U.S.C. § 1201. In this sense, the DMCA works in tandem with Section 629(b)'s prohibition on FCC rules that jeopardize security of MVPD service. *See supra* Part I.A.3.

191 NPRM ¶ 2.

192 *Id.* ¶ 68.

193 *Id.* ¶ 28.

content protection to ensure that the security of MVPD services is not jeopardized,"[194] this entire structure undermines the clear congressional directives to preserve, not dismantle, the security and protections of copyrighted works.

For example, the proposed rules would require that MVPDs give unaffiliated entities access to the Information Flows in a published, transparent, and standardized format,[195] and to *remove* the apps and user interfaces that operate as technological protection measures that Congress authorized as essential for securing copyrighted content. Indeed, the NPRM states that its express goal is to reduce MVPD "control of security decisions,"[196] and limit the "flexibility in content protection choices by MVPDs,"[197] even going so far as to state that "[w]e do not believe that each MVPD should have its own testing and certification processes"[198]—even though the MVPD has a contractual obligation to protect the programmer's intellectual property.

Congress, however, made clear that the DMCA was enacted to ensure that "[t]echnology and engineers—not lawyers—should dictate product design."[199] The standardization and mandatory dissemination of access required by the NPRM, in contrast, will inevitably make content protections easier to crack, undermining the entire statutory purpose of the DMCA. The proposed rules purport to delegate to future "standard-setting bodies" or a "Trust Authority" the

---

[194] *Id.* ¶ 29.

[195] *Id.* ¶¶ 35, 39.

[196] *Id.* ¶ 57.

[197] *Id.* ¶ 50.

[198] *Id.* ¶ 72.

[199] 144 Cong. Rec. S9936 (daily ed. Sept. 3, 1998) (remarks of Sen. Ashcroft); *see also* 144 Cong. Rec. H7100 (daily ed. Aug. 4, 1998) (remarks of Rep. Klug) ("[W]e have eliminated any ambiguity or presumption that products must be designed to affirmatively respond to or accommodate any technological measures. It also ensures that lawyers, judges and juries do not become the principal designers of consumer products in this country. In the end, this language ensures that product designers and manufacturers will have the freedom to innovate."); *see* H.R. Rep. No. 105-551, pt. 2, at 41 (1998).

task of ensuring that these standards somehow guarantee content protection, but provides no indication how the security of these Information Flows (*i.e.*, content) will be achieved.[200]

The FCC lacks the authority to require MVPDs to weaken the protections and contractual obligations they have put in place to secure copyright-protected materials.

b) The Proposed Rules Undermine the Interests of Content Owners and Programmers.

The proposed rules would also vitiate many of the exclusive rights that the Copyright Act provides to content providers, such as programming networks and motion picture studios, who supply content to MVPDs and other licensed distributors. As the Supreme Court recently made clear, video content owners enjoy, as part of their statutorily protected bundle of rights, the exclusive right to control the reproduction, distribution, and public performance of their works, and that right is violated any time an unauthorized video service provider "transmits" that content "by any device or process whereby images or sounds are received beyond the place from which they are sent," even if, "when doing so, it simply enhances viewers' ability to receive broadcast television signals."[201] In fact, in 1976, Congress expressly amended the Copyright Act to "regulate cable companies' public performances of copyrighted works" by "creat[ing] a complex, highly detailed compulsory licensing scheme that sets out the conditions, including the payment of compulsory fees, under which cable systems may retransmit broadcasts."[202] The proposed rules would undermine these statutory compulsory licensing arrangements.

---

[200] NPRM ¶¶ 37, 50.

[201] *Aereo*, 134 S. Ct. at 2505-06 (citing 17 U.S.C. §101; H.R. Rep. No. 94-1476, at 63 (1976)); *see also* 17 U.S.C. § 106(1), (3) (granting copyright holders "exclusive rights to do and authorize any of the following: (1) to reproduce the copyrighted work … [and] (3) to distribute copies … of the copyrighted work to the public").

[202] *Aereo*, 134 S. Ct. at 2505-06 (citing 17 U.S.C. § 111, H.R. Rep. No. 94-1476, at 88).

Creators develop valuable content with the understanding that they can use the content, license the content, restrict its uses, and even refuse to provide the content if they cannot reach a reasonable economic agreement as to price and usage.[203] Similarly, programmers spend billions of dollars developing channels catering to different consumer groups' interests, and they create, select, and license content consistent with the identity and reputation that they develop for different channels. In turn, programmers and content providers typically negotiate carriage and copyright license agreements with MVPDs with detailed terms surrounding channel position, tier placement, commercial placement, display of their brands, search results, advertising restrictions, and other issues related to presentation of their content, including terms related to content security that go to the heart of protecting proprietary works from unauthorized use.[204] MVPDs make market-based decisions in negotiating these arrangements, and, as a result, consumers benefit from a constantly improving range of choices and options for purchasing and accessing content. And indeed, consumer electronics device manufacturers have successfully negotiated complex programming distribution rights directly with content providers and connected a vast array of retail video devices to online video distribution networks.[205]

---

[203] *See, e.g.*, DSTAC Report at 296 (describing the various types of provisions contained in content licensing agreements); *see also* MB Docket 15-64, Comments of MPAA at 7 (Oct. 8, 2015).

[204] *See* DSTAC Report at 13, 15, 296; MB Docket 15-64, DBS Presentation to Working Group 1 at 6 (Aug. 12, 2015), *available at* http://apps.fcc.gov/ecfs/comment/view?id=60001097369.

[205] For example, Sling TV and Sony both offer over-the-top services that feature many of the most prominent program networks. *See* Tim Moynihan, *Sling TV Launches Today, Streaming Tons of Shows at Basic-Cable Prices*, WIRED, Feb. 9, 2015, http://www.wired.com/2015/02/sling-tv-launches-today-streaming-expanded-cable-shows-basic-cable-prices/; Nick Statt, *Sony's PlayStation Vue adds ESPN and is $10 cheaper*, THE VERGE, Mar. 2, 2016, http://www.theverge.com/2016/3/2/11148184/sony-playstation-vue-price-cut-espn-disney-channels. In addition, retail devices can access enormous libraries of content through apps from over-the-top providers, such as Netflix and Amazon, and apps offered directly by content owners, such as HBO GO and major sports leagues. *See* SNL Kagan, *The Cord Cutters Guide to Sports Apps, Internet Media Investor*, June 11, 2014; Time Warner Inc., *HBO Chairman and CEO Richard Piepler Announces HBO to Offer a Stand-Alone HBO Streaming Service in 2015* (press release), Oct. 15, 2014.

However, as the DSTAC report explains, the competitive navigation proposal now embodied in the NPRM would "fail[] to enforce requirements from content providers, including channel presentation in required neighborhoods (*e.g.*, news channels) and channel assignments (*e.g.*, broadcaster carriage on channel); channel logos; and search requirements (*i.e.*, all shows accessed from a program network-branded folder)."[206] The NPRM proposes no restrictions on third parties to respect such content licensing structures, instead leaving issues "such as channel placement and treatment of advertising to marketplace forces."[207] For example, under the proposed rules, there is no technical (or any other) means to prevent a third-party device or app from moving a particular program from the position or "neighborhood" required by the content provider as a condition of distribution, such as to a remote page of search returns after auctioning priority positions to a high bidder.[208] Or the third party could simply prioritize programming of its own choosing.[209] By removing the measures that actually preserve and protect content, channel position, and neighborhood, the FCC has stripped away a copyright owner's statutory right to decide whether, how, and on what platforms to disseminate its content and the ways in which it chooses to connect with its audience.

In the DSTAC proceedings, proponents of a new technology mandate argued that retail devices should not have to comply with the terms governing the original content licensing to

---

[206] DSTAC Report at 290.

[207] NPRM ¶ 2.

[208] *See* DSTAC Report at 290; 295. In addition to contractual placement conditions, broadcasters have the legal right to require cable operators to carry their programming on the channel on which a particular station is licensed to broadcast. *See* 47 U.S.C. §§ 534, 535. Appropriate channel placement is also the subject of retransmission consent agreements. *See* 47 U.S.C. § 325(b) (requiring consent for retransmission of broadcasting station signals by cable systems or other MVPDs). Further, the compulsory copyright license under which MVPDs retransmit broadcast signals requires that they be retransmitted in their entirety, including advertising. *See* 17 U.S.C. §§ 111(c)(3); 122(e).

[209] *See* DSTAC Report at 290.

MVPDs, even though that would be the ultimate source of their content. The Consumer Video Choice Coalition reiterated this point after the DSTAC proceedings, telling the FCC that "makers and marketers of competitive devices cannot be expected to respect private, secret, and temporary pacts between and among MVPDs and content owners."[210] TiVo also confirmed its view that "competitive device providers are not and should not have to be bound to programming contracts entered into by MVPDs to which they were not party."[211]

This compelled repackaging and redistribution of content without the consent of the programmers or other content providers clearly violates the critical rights provided to copyright owners by the Copyright Act itself to determine how their works will be reproduced, distributed, and publicly performed, and to develop licensing structures that maximize the value of those works, including by negotiating with programmers or other forums such as movie theaters to receive increased royalties in return for exclusive access to desirable content.

And yet, when Chairman Wheeler was asked about existing contract provisions related to video content, his initial response was to suggest that these licensing arrangements should somehow remain "sacrosanct and untouched" simply because "copyright law remains in place."[212] That is a dangerously cavalier approach. If the FCC creates a system that mandates a dramatic expansion of access to copyright-protected MVPD material, it cannot simply leave it up to copyright holders (many of which are small, independent, and diverse programmers) to

---

[210] MB Docket 15-64, Letter from Consumer Video Choice Coalition to Marlene H. Dortch, Secretary, FCC at 4 (Jan. 21, 2016).

[211] MB Docket 15-64, Letter from Devendra T. Kumar, Counsel for TiVo Inc., to Marlene H. Dortch, Secretary, FCC at 1 (Jan. 13, 2016).

[212] *See Oversight of the Federal Communications Commission: Hearing Before the S. Comm. on Commerce, Sci., & Transp.*, 114th Cong. (2016) (statement of FCC Chairman Tom Wheeler).

enforce their copyrights by litigation against the very entities that the FCC allowed to access those copyright-protected works without any protective regulatory or technical measures.[213]

c) The Proposed Rules Require MVPDs to Give Up Their Own Copyright Interests in Works Developed to Deliver Content.

The proposed rules also expressly require MVPDs to surrender their *own* copyright protections in the independent creative works that are used to deliver video content to their customers in ways that protect the video content from unlicensed access and duplication, and that add substantial value to the video content itself. Although the NPRM gives lip service to the goal of copyright protection at a general level, the text makes clear that the Commission has no interest in protecting the copyrights in works necessary to deliver video content.[214]

First, the proposed rules violate MVPDs' protected copyright interest in the distinctive bundles of programming and additional content they offer consumers. Each MVPD creates a unique service offering and exercises significant creative judgment selecting programming, organizing that programming into channel groups and tiers, and combining programming with other original content.[215] This creative judgment makes MVPD programming packages

---

[213] As discussed above, creators and copyright owners also depend on a web of private contracts to enforce their interests in the distribution of video content. Even if it were sufficient to say that copyright litigation will solve any copyright problems created by the proposed rules, that does nothing to protect these closely related contractual rights that will likely be trampled if third parties refuse to adhere to the MVPDs' obligations under these agreements, many of which are subject to confidentiality provisions. By weakening these contractual backstops to copyright law, the rules would harm not just copyright owners but many others that depend on residuals or downstream licensing revenue.

[214] *See, e.g.*, NPRM ¶ 29 ("unaffiliated vendors must implement content protection"); *id.* ¶ 45 (focusing on delivery of "content"); *id.* ¶ 50 (describing only a "content protection system"); *id.* ¶ 71 (distinguishing between need for "content protection" from services offered by MVPDs that must be offered to navigation devices); *id.* ¶ 80 ("[N]othing in our proposal will change or affect content creators' rights or remedies under copyright law.").

[215] The significance of this creative judgment in the context of an MVPD's service offering is powerfully illustrated by the decision of the Academy of Television Arts & Sciences to honor Comcast with an Emmy at its 2014 Creative Arts Award Ceremony for XFINITY TV on the X1 Platform in the category of "Outstanding Achievement in Interactive Media Program: User Experience and Visual Design." *See* Press Release, Academy of Television Arts & Sciences, Interactive Media Juried Award Winners Announced (Aug. 13, 2014), http://www.emmys.com/news/press-releases/interactive-media-juried-award-winners-announced.

"collective works" and "compilations" protected under copyright law.[216] Similarly, the Copyright Act also protects the selection and arrangement of video content as a form of expression under the Copyright Act.[217] In this respect, MVPDs stand in the same position as broadcasters and have a copyright interest in their selection of the "optimum mix and arrangement of [a station's] programming" during a broadcast day "based on audience demographics, competing broadcasts, seasonal changes, and 'audience flow' from one program to the next."[218]

The proposed rules would also violate MVPDs' exclusive right to create and control "derivative works" using their copyrighted material.[219] The Copyright Act defines a "derivative work" as

> a work based upon one or more preexisting works, such as a translation, musical arrangement, dramatization, fictionalization, motion picture version, sound recording, art reproduction, abridgment, condensation, *or any other form in which a work may be recast, transformed, or adapted*. A work consisting of editorial revisions, annotations, elaborations, or other modifications which, as a whole, represent an original work of authorship, is a "derivative work."[220]

---

[216] A "collective work" is "a work . . . in which a number of contributions, constituting separate and independent works in themselves, are assembled into a collective whole." 17 U.S.C. § 101. A "compilation" is "a work formed by the collection and assembling of preexisting materials or of data that are selected, coordinated, or arranged in such a way that the resulting work as a whole constitutes an original work of authorship." *Id.*

[217] *See, e.g.*, *Roy Export Co. v. Columbia Broad. Sys., Inc.*, 672 F.2d 1095, 1103 (2d Cir. 1982) (finding that the plaintiff''s selection of unprotected Charlie Chaplin film clips constituted a protectable original creative work); *see also Eckes v. Card Prices Update*, 736 F.2d 859, 863 (2d Cir. 1984) (finding copyright enforceable where owner "exercised selection, creativity and judgment in choosing among the 18,000 or so different baseball cards").

[218] *National Ass'n of Broad. v. Copyright Royalty Tribunal*, 675 F.2d 367, 377 & n.13 (D.C. Cir. 1982); *see also id.* at 378 (recognizing that "the efforts used in juggling programs and compiling a broadcast day constitute a copyrightable interest under the Act.").

[219] *See* 17 U.S.C. § 106(2).

[220] *Id.* § 101 (emphasis added).

A party thus violates a copyright holder's statutory rights when, without permission, it breaks up and recasts original creative material or reorganizes a protected compilation or collective work.[221]

That, however, is the very *aim* of the proposed rules—to enable equipment manufacturers to copy the underlying content in an MVPD's service bundle "in a published, transparent, standardized format so that those entities would understand what information is available to them,"[222] and either use it or reassemble it with new menus and a different organizational structure and presentation.[223] Nothing in Section 629 remotely authorizes the Commission to facilitate this radical abrogation of MVPD copyright interests.

Second, the proposed regulations would interfere with MVPDs' copyright interest in the distinctive "look and feel" of their service offerings. Various unique features contribute to the overall appearance of an MVPD's service and other nonfunctional elements, including the visual display, electronic programming guide, on-demand library, visual interface for voice controls, design for providing on-screen in-game sports statistics, and other diverse applications provided along with the service. Such "look and feel" features are entitled to copyright protection.[224] Some courts, for example, have protected the "user interface" and "audiovisual displays, or

---

221 *See, e.g.*, *Video Pipeline, Inc. v. Buena Vista Home Entm't, Inc.*, 192 F. Supp. 2d 321 (D.N.J. 2002), *aff'd*, 342 F.3d 191 (3d Cir. 2003); *Greenwich Workshop, Inc. v. Timber Creations, Inc.*, 932 F. Supp. 1210 (C.D. Cal. 1996); *National Bank of Commerce v. Shaklee Corp.*, 503 F. Supp. 533 (W.D. Tex. 1980).

222 NPRM ¶ 35.

223 *See id.* ¶ 1 (explaining that the proposed rules are intended to "promote innovation in the display, selection, and use of [multichannel video] programming"); *id.* ¶ 12 (concluding that "competition in the user interface and complementary features" provided with video programming "is essential to achieve the goals of Section 629"); *id.* ¶ 17 (stating that the proposed rules are intended to lead to "competition in interfaces, menus, search functions, and improved over-the-top integration"); *id.* ¶ 27 ("unaffiliated vendors must be able to differentiate themselves in order to effectively compete based on the user interface and complementary features they offer users. . . ."); *id.* ¶ 35 n.95 ("[W]e believe that competition in the user experience is an essential part of assuring a commercial market.").

224 *See, e.g.*, *Lotus Dev. Corp. v. Paperback Software Int'l*, 740 F. Supp. 37, 55 (D. Mass. 1990) (finding copyright protection for the "look and feel" of a computer program's interface); *Mistretta v. Curole*, 22 U.S.P.Q.2d 1707, 1708 (E.D. La. 1992) (concluding that the "look and feel" of a work of art was worthy of copyright protection).

screen 'look and feel'" of computer programs;[225] others have protected the structure, sequence, and organization of a program's content or substance;[226] and several have held that a program or service's screen displays are protected under this "look and feel" analysis.[227]

Importantly, although the NPRM states that "unaffiliated vendors must be able to differentiate themselves . . . based on the user interface and complementary features they offer users,"[228] the proposed rules do not mandate that competing video service devices reconstruct their user interface from scratch. Rather, the rules allow equipment manufacturers to use an MVPD's user interface and guide material as a basis for any "new" user interface or other features. If the Commission were to authorize equipment manufacturers to alter that look and feel of the MVPD's user interface without seeking consent from the affected MVPD, it would run headlong into the Copyright Act's preservation of an MVPD's exclusive rights to make or authorize such alterations to the look and feel of its product offerings.

Third, the proposed rules would interfere with copyright interests in electronic programming guides ("EPGs"). Specifically, the NPRM would require MVPDs to provide all navigation devices with the "Service Discovery Data" that is "necessary to request a Navigable Service" (which is itself defined to cover all multichannel video programming, both as broadcast and on demand).[229] The Commission states that this must include, "at a minimum, channel

---

[225] *Lotus*, 740 F. Supp. at 55 (quoting *Telemarketing Res. v. Symantec Corp.*, 12 U.S.P.Q.2d 1991, 1993 (N.D. Cal. 1989)).

[226] *See, e.g.*, *Whelan Assocs., Inc. v. Jaslow Dental Lab., Inc.*, 797 F.2d 1222 (3d Cir. 1986).

[227] *See, e.g.*, *Broderbund Software, Inc. v. Unison World*, 648 F. Supp. 1127 (N.D. Cal. 1986) (holding that the overall structure, sequencing, and arrangement of screens in a computer program constituted a copyright-protected interest when these elements were motivated by aesthetic and artistic concerns); *Goldman v. Healthcare Mgmt. Sys., Inc.*, 628 F. Supp. 2d 748 (W.D. Mich. 2008) (noting that copyright protection can extend to, among other things, screen displays and main menus).

[228] NPRM ¶ 27.

[229] *Id.* ¶ 38.

information (if any), program title, rating/parental control information, program start and stop times (or program length, for on-demand programming), and an 'Entertainment Identifier Register ID' so that competitive navigation devices can accurately convey to consumers the programming that is available," and it even invites comment on whether it should also include written "program description information that the MVPD sends to its own navigation devices" and "descriptive information about the advertising embedded within the program."[230] On its face, this proposal is designed to require MVPDs to disassemble and deliver guide data to third parties for use in developing the third parties' own guides.[231]

But MVPDs license this information from content providers, create their own, and select and arrange it in distinctive ways and at great expense. Much of the data MVPDs use to populate their EPGs belongs to companies such as Rovi and Tribune, which charge MVPDs and device manufacturers for its use.[232] MVPD contracts with these companies typically limit or prohibit the redistribution of this guide data.[233] These data compilations are entitled to copyright protection, as they consist of unique descriptions of programming that require creativity and considerable editorial discretion to produce.[234] Tribune, for instance, employs "more than 150 editors" dedicated to tasks such as "researching, creating, and editing EPG content from over

---

[230] *Id.* Although the Commission states that its "tentative view" is that descriptive information should not be included in the mandate, it is far from certain that will be the Commission's final view. Even raising the question, moreover, indicates that the Commission believes that it has the authority to assume control of the copyright in this written descriptive information.

[231] MB Docket 15-64, NCTA Comments at 32-33 and Reply Comments at 30-31 (Nov. 9, 2015).

[232] DSTAC Report at 295; MB Docket 15-64, NCTA Comments at 32.

[233] DSTAC Report at 295.

[234] *See, e.g.*, MB Docket 10-91, Tribune Reply Comments at i, 4, 7-9 (Aug. 12, 2010) and Rovi Comments at 4-5 (July 13, 2010).

15,000 sources" and notes that producing EPG content involves "a substantial amount of original research and content creation (*e.g.*, program descriptions and plot summaries)."[235]

Although the NPRM states that the Commission has reached a "tentative" conclusion that Service Discovery Data "should not include the detailed program guide information that unaffiliated Navigation Device developers must purchase or create," it seeks further comment on what additional data MVPDs should be required to provide.[236] The Copyright Act, though, clearly precludes equipment manufacturers from "reproduc[ing] the copyrighted" programming descriptions, "distribut[ing] copies" of those descriptions, or "prepar[ing] derivative works based upon" copyrighted programming descriptions without the consent of the copyright holder.[237]

Even with respect to data that MVPDs do not themselves own, MVPDs still exercise creative judgment to compile the data into unique programming guides and user interfaces that distinguish their services from those of competitors. MVPDs' programming guides—as well as the programming, navigation features, applications, and other inputs with which they are combined—are distinctive, branded offerings and thus constitute copyright-protected

---

[235] MB Docket 10-91, Tribune Reply Comments at 4, 8. Further, Tribune notes that its editors "determine the appropriate genre and other topic information for a particular program, . . . update plot summaries continuously . . . as well as the latest biographical content for major actors and directors associated with the programming." *Id.* at 8; *see also* MB Docket 10-91, Rovi Comments at 5 (noting that the company provides information such as "program descriptions and episodic summaries[] that necessarily require[] creative expression" and that the company uses "creativity and subjective analysis" to "sort, select, describe and group programming data (including original works of authorship . . . [] to produce high quality, user-friendly data").

[236] NPRM ¶ 38.

[237] 17 U.S.C. § 106(1)-(3). Even if the FCC were to conclude that navigation devices should be required to license certain categories of programming data from third parties such as content providers, there is no guarantee that the Commission would exclude the other categories of relevant data that MVPDs typically obtain from other third parties, such as start and stop times, rating and parental control information, and certain program descriptions. The Commission cannot require MVPDs to breach licensing agreements or violate the copyright interests of the providers of this material.

"compilations" or "collective works."[238] MVPD user guides contain far more creativity and originality than many compilations that courts have held to be entitled to copyright protections.[239] These programming guides include not only the creative programming descriptions supplied by metadata providers, but also, in many cases, graphical, video, and other original content supplied by the MVPDs themselves.[240] Indeed, the Supreme Court has explained that, even in cases where, unlike here, the underlying data consists purely of uncopyrightable facts, the selection and arrangement of such facts is protected so long as its elements are combined in a way that is not "so mechanical or routine as to require no creativity whatsoever."[241] That test clearly is met here, as EPG developers and MVPDs select the material to be included, develop a meaningful order for the data, and arrange it so that consumers can easily use it to select programming.[242] Thus, as with any copyrighted work, equipment manufacturers may use the descriptions and other data contained within programming guides, and may create works derived from the guides themselves, *only* after entering into an agreement with the party holding the rights to that work.

In sum, the proposed rules would indisputably undermine the purposes and protections of U.S. copyright law. That is something the Commission is simply not authorized to do.[243]

---

238 *Id.* § 101; *see, e.g.*, MB Docket 10-91, Rovi Comments at 4-6, AT&T Comments at 52-54, 55 & n.78 (July 13, 2010), AT&T Reply Comments at 41-42 (Aug. 12, 2010), and MB Docket 15-64, NCTA Reply Comments at 32.

239 *See, e.g.*, *CDN Inc. v. Kapes*, 197 F.3d 1256, 1261 (9th Cir. 1999) (holding that guide listing prices for collectable coins contained sufficient originality to merit copyright protection); *Key Publications, Inc. v. Chinatown Today Publ'g Enters., Inc.*, 945 F.2d 509, 512-14 (2d Cir. 1991) (holding that Yellow Pages directory of Chinese-American businesses was copyrightable because it constituted a "selection of business names, addresses, and phone numbers, separated into descriptive categories" and involved decisions about what businesses to include or exclude).

240 *See* MB Docket 15-64, NCTA Comments at 44; MB Docket 15-64, AT&T Comments at 15-16 (Oct. 8, 2015).

241 *Feist Publications, Inc.*, 499 U.S. at 348, 362.

242 *See* MB Docket 10-91, Rovi Comments at 4-6 and MB Docket 15-64, NCTA Comments at 44.

243 The Copyright Office has long been recognized as the expert agency in administering the Copyright Act and how that law interacts with cable regulation. *See, e.g.*, *Cablevision Sys. Dev. Co. v. MPAA*, 836 F.2d 599, 608 (D.C. Cir. 1988).

Copyright protections "ultimately serve[] the purpose of enriching the general public through access to creative works."[244] Although "[t]he immediate effect of our copyright law is to secure a fair return for an 'author's' creative labor[,] . . . the ultimate aim is, by this incentive, to stimulate artistic creativity for the general public good."[245] Each creator and programmer described above bases long-term business decisions and strategy upon these property interests and the confidence that they will not be arbitrarily taken away (or their value destroyed) by the government. Without the guarantee that creative labor will receive protection and a fair return, the proposed rules would diminish incentives to invest substantial resources and great expense into creating valuable, original content and developing new and innovative ways to compile and distribute it. But the balancing of those interests is not a job that Congress delegated to the FCC.

2. The Proposed Rules Will Weaken Established Federal Trademark Rights and Cause Substantial Consumer Confusion.

The proposed rules would also create numerous trademark violations. It is well established that "'[o]ne of the most valuable and important protections afforded by the Lanham Act [the federal trademark law] is the right to control the quality of the goods manufactured and sold under the holder's trademark.'"[246] This is precisely why the Lanham Act prohibits the resale of "materially different" trademark goods, because it "creates . . . confusion over the source of the product and results in a loss of [plaintiffs'] good will."[247]

---

[244] *Fogerty v. Fantasy, Inc.*, 510 U.S. 517, 527 (1994).

[245] *Twentieth Century Music Corp. v. Aiken*, 422 U.S. 151, 156 (1975).

[246] *See Polymer Tech. Corp. v. Mimran*, 975 F.2d 58, 62 (2d Cir. 1994)) (quoting *El Greco Leather Products Co. v. Shoe World, Inc.*, 806 F.2d 392, 395 (2d Cir. 1986)).

[247] *Original Appalachian Artworks, Inc. v. Granada Electronics, Inc.*, 816 F.2d 68, 73 (2d Cir. 1987); *see also SoftMan Prods. Co. v. Adobe Sys. Inc.*, 171 F. Supp. 2d 1075, 1092 (C.D. Cal. 2001) ("When the reseller's conduct goes beyond the mere resale of trademarked goods, such conduct may be sufficient to support a cause of action for infringement.").

The proposed rules, however, appear to mandate this kind of confusion. As the NPRM makes clear, its goal is to allow "entities that have no business relationship with any MVPD" to repackage MVPD services, content and data and offer such services to the public under their own name.[248] But MVPDs will expressly *not* be allowed to test or certify the devices that will be advertised to the public as authorized to carry MVPD programming.[249] Indeed, the NPRM states that competing navigation devices will *not* need to "seek approval, review or testing from the MVPDs themselves" even though they will have "parity of access to content" provided by an MVPD and "the same flexibility as MVPDs when developing and deploying devices."[250] In fact, the rules seem to require that if an MVPD develops an application to allow its customers to access its services on a mobile device, the price of rendering this service to customers will be to allow a "competitive application [to] access MVPD programming" for repurposing as its own service.[251] Thus, the proposed rules would allow third-party devices to offer the public the ability to receive components of the MVPD's service without giving the MVPD any control over how its services will actually be presented to the public.

At a minimum, consumers will be confused as to whether the MVPD "sponsored or otherwise approved the use of" its trademarks in connection with the retail app or device.[252] At worst, third parties would be able to hold themselves out to the public "in a manner . . . likely to

---

[248] NPRM ¶ 23; *see also id.* ¶ 49.

[249] *Id.* ¶ 72.

[250] *Id.* ¶¶ 59, 63.

[251] *Id.* ¶ 68.

[252] *See, e.g.*, *Famous Horse Inc. v. 5th Ave. Photo Inc.*, 624 F.3d 106, 109 (2d Cir. 2010) (Lanham Act prohibits not only source confusion but also association or endorsement confusion), *abrogated on other grounds by Lexmark Int'l, Inc. v. Static Control Components, Inc.*, 134 S. Ct. 1377 (2014).

suggest to prospective customers that [they are] a part of the" MVPD's official chain of distribution.[253] Either way, it would violate MVPDs' trademark rights.[254]

It is not difficult to conceive how consumers will become confused by apps and navigation devices boasting of their ability to provide MVPD content and programming. For example, if a consumer experiences a service interruption, she or he will very likely have trouble determining whether the party responsible is the maker of the navigation device or the MVPD providing the feed.[255] Courts have frequently found trademark infringement where trademark owners can show that customers have difficulty distinguishing what company is responsible for the good or service at issue and complain to the wrong company.[256] The Commission itself has recognized this "risk," explaining that "if neither the manufacturer, retailer, nor service provider appear responsible to the consumer for the device's reliability and functionality, the goals of Section 629 are undermined."[257] The current proposal will make this danger a virtual reality.

---

[253] *H.L. Hayden Co. of New York v. Siemens Med. Sys., Inc.*, 879 F.2d 1005, 1023-24 (2d Cir. 1989). *See also Bandag, Inc. v. Al Bolster's Tire Stores, Inc.*, 750 F.2d 903, 911 (Fed. Cir. 1984) (holding defendant accountable for use of plaintiff's trademark in Yellow Pages ad to create false suggestion of affiliation with plaintiff).

[254] This would equally be true with respect to programmers' trademarks. Programming agreements grant MVPDs the right to use trademarks and logos associated with programs or programmers but with certain limitations. Indeed, program suppliers that license programming from other sources, such as broadcasters, are typically required to impose such limits by their sources.

[255] MVPDs incur substantial costs when consumers incorrectly reach out by phone or online to their consumer complaint systems regarding issues caused by third parties. This is precisely the type of harm that trademark law was designed to prevent. *See, e.g.*, *T-Mobile USA, Inc. v. Terry*, 862 F. Supp. 2d 1121, 1126-27 (W.D. Wash. 2012) (awarding summary judgment on plaintiff's trademark infringement claim and noting that defendant has "substantially harmed" plaintiff, in part, because defendant's unlawful activities have "resulted in calls by confused and angry consumers to [plaintiff's] customer relations department, for which [plaintiff] incurs costs," and because "[plaintiff's] reputation is further damaged when [it] is unable to assist those consumers").

[256] *See, e.g.*, *Visa Int'l Serv. Ass'n v. VISA/Master Charge Travel Club*, 213 U.S.P.Q. 629, 635 (N.D. Cal. 1981) ("evidence of . . . many consumer complaints filed by defendants' customers weighs heavily"); *ConAgra, Inc. v. Singleton*, 743 F.2d 1508, 1515 n.10 (11th Cir. 1984) ("customers complain[ed] about shrimp purchased from a grocery chain that sold the products of Singleton Packing, not Singleton Shrimp Boats"); *R.J. Toomey Co. v. Toomey*, 683 F. Supp. 873 (D. Mass. 1988) (finding evidence of consumer confusion where customer complained to wrong company about product).

[257] 1998 Order, 13 F.C.C. Rcd. at 14782, ¶ 17.

The NPRM does not credibly address this issue. The closest the Commission comes is to point out that TiVo devices "have been deployed in the market for over a decade without allegations of a loss of consumer privacy, violations of advertising limits during programming for children, or problems with emergency alerts and accessibility."[258] Unidirectional CableCARD devices are limited to linear cable channels, and the Commission admits that the deployment of such devices has been quite limited.[259] In fact, there have been reports of such violations,[260] and the Commission has no basis to predict that these problems will not become more widespread once all MVPDs are mandated to surrender all programming, including the highest value content in the earliest release windows, to new unaffiliated market entrants. Nor does the Commission have any basis for assuming that consumers will be able to accurately diagnose whether an MVPD is or is not responsible for a data breach or interruption of service caused by a flaw in a third-party app or navigation device.[261]

Alternatively, if apps or navigation devices were to strip out the MVPD's trademarks and identifying information entirely, that would still violate the MVPD's trademark rights. TiVo, for example, was not shy during the AllVid proceedings about the fact that it "wants access to the underlying data *without* any trademarks of the MVPD" and that it "does not want to be forced to

---

258 NPRM ¶ 73.

259 *Id.* ¶ 2. Moreover, under the preexisting CableCARD regime, third-party navigation boxes were not explicitly encouraged to take MVPD feeds and "differentiate themselves . . . based on the user interface and complementary features they offer users" in viewing those feeds. *Id.* ¶ 27. The FCC has no basis to predict how this differentiation will affect viewer experience.

260 *See supra* note 146 (documenting instances in which TiVo engaged in the practice of overlaying ads on top of broadcast signals carried over cable systems).

261 To the contrary, the Commission claims it does not have evidence that the provision of MVPD services to navigation devices "will disrupt elements of service presentation." NPRM ¶ 80. But the Commission also has no evidence that if such disruptions were to occur, consumers will correctly place the blame on navigation devices rather than on MVPDs.

use any of the MVPD's branding."[262] And the proposed rules themselves provide that MVPDs cannot "discriminate" in providing "Navigable Services" based on "the affiliation of the Navigation Device."[263] But when a third party strips an MVPD's trademark from the services that MVPD provides and repackages those services as its own, that constitutes "reverse passing-off" in violation of trademark law.[264] This is exactly what the proposed rules require.

Furthermore, the proposed rules will likely cause the separate harm of diluting MVPDs' trademarks by "whittling away" at their selling power and value or by "tarnish[ing]" those marks by causing them to be "linked to products of shoddy quality" that were not of the MVPD's choosing.[265] This harmful dilution occurs, as a matter of law, even in the absence of "confusion as to source or sponsorship[;] . . . [t]he unauthorized pullulation itself causes the harm."[266]

For all these reasons, the NPRM threatens to violate MVPDs' trademark rights.

3. The Proposed Rules Would Harm Competition by Forcing MVPDs into Existing Patent Monopolies and Exposing the United States to Liability for Infringement.

"The patent laws 'promote the Progress of Science and useful Arts' by rewarding innovation with a temporary monopoly. U.S. Const., Art. I, § 8, cl. 8."[267] "[T]he essence of a patent grant is the right to exclude others from profiting by the patented invention."[268] Forcing

---

[262] *See* CS Docket 97-80, Letter from Matthew Zinn, Senior Vice President, General Counsel, Secretary, and Chief Privacy Officer, TiVo Inc., to Marlene H. Dortch, Secretary, FCC at 15 (Feb. 17, 2010) (emphasis added).

[263] NPRM ¶ 66.

[264] *See Universal Furniture Int'l, Inc. v. Collezione Europa USA, Inc.*, 618 F.3d 417, 438 (4th Cir. 2010), *as amended* (Aug. 24, 2010) (explaining that the Lanham Act prohibits "'reverse passing off', which occurs when a 'producer misrepresents someone else's goods or services as his own.'") (quoting *Dastar Corp. v. Twentieth Century Fox Film Corp.*, 539 U.S. 23, 28 n.1 (2003)).

[265] *Tiffany (NJ) Inc. v. eBay Inc.*, 600 F.3d 93, 111 (2d Cir. 2010) (internal quotation marks omitted).

[266] *Hormel Foods Corp. v. Jim Henson Prods., Inc.*, 73 F.3d 497, 506 (2d Cir. 1996).

[267] *Festo Corp. v. Shoketsu Kinzoku Kogyo Kabushiki Co.*, 535 U.S. 722, 730 (2002).

[268] *Dawson Chem. Co. v. Rohm & Haas Co.*, 448 U.S. 176, 215 (1980).

the entire MVPD industry to comply with hastily implemented technical standards carries ominous implications for MVPDs, consumers, and the American taxpayer, who will be forced to bear the cost of increased patent litigation.

The NPRM proposes to defer to approved "open standards bodies" that will be empowered to set specifications for providing Service Discovery, Entitlement Data, and Content Delivery Data.[269] These specifications must be established and implemented by MVPDs within two years of adoption of rules.[270] But the standard-setting process, as the FTC has stated, can lead to an entire industry being "locked-in" and gives "a firm with a patent reading on the standard . . . market power in the relevant technology market" to "demand a royalty that reflects not only the *ex ante* value of the technology compared to alternatives, but also the value associated with investments made to implement the standard."[271]

The MVPD and set-top box markets include numerous, aggressive patent-rights holders and a corresponding history of lengthy patent-assertion campaigns against multiple companies to pursue hundreds of millions of dollars in patent infringement damages. Video-on-demand and switched digital video implementations are laced with patents, and competing vendors use those IP rights as a key foundation for their businesses.[272] TiVo aggressively pursues patent litigation related to its technology, and patent licensing fees account for over $1.6 billion in judgments and

---

[269] NPRM, ¶¶ 34, 36, 41.

[270] *Id.* ¶ 43.

[271] *See* FED. TRADE COMM'N, THE EVOLVING IP MARKETPLACE: ALIGNING PATENT NOTICE AND REMEDIES WITH COMPETITION 192 (Mar. 2011) ("FTC Evolving Marketplace"). "When a patented technology is incorporated in a standard, adoption of the standard eliminates alternatives to the patented technology" and "firms may become locked in to a standard requiring the use of a competitor's patented technology," which "may permit it to demand supracompetitive royalties." *Broadcom Corp. v. Qualcomm, Inc.*, 501 F.3d 297, 314 (3d Cir. 2007).

[272] *See, e.g.*, *VOD Patent Battle Turns Bitter*, CABLE WORLD (Jan 15, 2001) ("nCube's patent appears to be fairly broad, describing a fundamental process that covers, among other things, video-on-demand."); *nCUBE Claims in VOD Patent Spat*, CED MAGAZINE (June 30, 2002) (jury verdict over $2 million with seven percent ongoing royalty on sales), http://www.cedmagazine.com/news/2002/06/ncube-claims-victory-vod-patent-spat.

settlements—a major portion of TiVo's overall revenue.[273] Observers have stated that TiVo is seeking to "preserve its lucrative patent business" by increasing manufacturer exposure to its patent claims.[274] There is no indication that TiVo or any of the other patent-rights holders in this space will agree on or participate in the FCC's proposed standardization process or pool their intellectual property for the competitive good.

Furthermore, the proposed rules do not provide any modicum of protection found in normal, voluntary standard-setting bodies that obligate members to disclose patent rights or to license their standard-essential patents on fair, reasonable, and nondiscriminatory ("FRAND") terms.[275] Any obligation to disclose or license patents under FRAND terms also "cannot constrain those patent holders not participating" in the standard-setting body—thus leaving MVPDs open to suit from nonparticipating patent holders.[276] The end result is increased costs for consumers from billions of dollars in legal fees and settlements.

Moreover, by mandating compliance with approved technical standards, the FCC risks opening the floodgates of patent litigation against the United States for these same acts of patent infringement under 28 U.S.C. § 1498(a). Section 1498(a) provides an exclusive remedy for

---

[273] *See, e.g.*, Todd Spangler, *TiVo Settles Patent Suits with Cisco, Google and Time Warner Cable*, VARIETY (Jun. 7, 2013) (noting that TiVo's $1.6 billion in patent revenue "exceeds the gross revenue the company has generated over the past six years, from 2007 to 2012"), http://variety.com/2013/digital/news/tivo-hauls-490-mil-in-patent-settlement-with-cisco-and-google-1200493963/; *see also* Janko Roettgers, *TiVo Files Patent Infringement Lawsuit Against Samsung*, VARIETY (Sep. 8, 2015) ("Basically, if a company makes a digital video recorder and has enough cash on hand, there's a good chance that TiVo has filed a lawsuit against it at some point."), http://variety.com/2015/digital/news/tivo-files-patent-infringement-lawsuit-against-samsung-1201588124/.

[274] Jacob Kastrenakes, *TiVo is trying to preserve its lucrative patent business by suing Samsung*, THE VERGE (Sep. 8, 2015), http://www.theverge.com/2015/9/8/9284091/tivo-samsung-dvr-patent-lawsuit.

[275] FRAND obligations, while promising lower or more reasonable royalties, still lead to extensive litigation over what a FRAND royalty could be. *See* FTC Evolving Marketplace, *supra* note 271 ("[T]here is much debate over whether such . . . FRAND commitments can effectively prevent patent owners from imposing excessive royalty obligations on licensees."). FCC-imposed FRAND obligations have also provoked disputes. *See In re Coalition United to Terminate Financial Abuses of the Television Transition, LLC*, 24 F.C.C. Rcd. 2407 (2009).

[276] *See* FTC Evolving Marketplace at 192-93.

patent infringements that occur "for the Government" and are conducted "with the authorization or consent of the Government."[277] The proposed rules require compliance with a technical standard and thus are "authorized" by the government because an MVPD could not "comply with its legal obligation[] [under the proposed standard] without engaging in the allegedly infringing activities."[278] "The mere fact that the Government specifications . . . [do] not absolutely require [infringement] . . . does not extinguish the Government's consent."[279] Compliance with this mandatory standardization process is likewise "for the benefit of the government" because, as the NPRM states, the entire purpose of the proposed rules is to "fulfill [the FCC's] obligation under Section 629 of the Communications Act to assure a commercial market for devices that can access multichannel video programming and other services offered over multichannel video programming systems."[280] Thus, the proposed rules expose the coffers of the United States to unnecessary and extensive damages for patent infringement.

* * *

---

[277] 28 U.S.C. § 1498(a). To be done "for the United States," the alleged use or manufacture must be undertaken "for the benefit of the government." *IRIS Corp. v. Japan Airlines Corp.*, 769 F.3d 1359, 1362 (Fed. Cir. 2014); *see also Madey v. Duke Univ.*, 413 F. Supp. 2d 601, 607 (M.D.N.C. 2006) ("A use is 'for the Government' if it is 'in furtherance and fulfillment of a stated Government policy' which serves the Government's interests and which is 'for the Government's benefit.'") (quoting *Riles v. Amerada Hess Corp.*, 999 F. Supp. 938, 940 (S.D. Tex. 1998)). "[I]ncidental benefit to the government is insufficient," but "[i]t is not necessary [for the government] to be the sole beneficiary." *Advanced Software Design Co. v. Fed. Reserve Bank of St. Louis*, 583 F.3d 1371, 1378 (Fed. Cir. 2009).

[278] *IRIS Corp.*, 769 F.3d at 1362. In *IRIS*, Japan Airlines was required to examine passengers' electronic passports by law, without mandating the use of any specific technology. *See id.* at 1361; 8 U.S.C. § 1221; 19 C.F.R. § 122.75a(d). The Federal Circuit held that the government provided express authorization or consent because Japan Airlines "cannot comply with its legal obligations without engaging in the allegedly infringing activities." 769 F.3d at 1362. The court also found that the government directly benefited from Japan Airlines' use of the patented process because the process enhanced border security and improved the government's ability to examine the flow of people into and out of the country. *Id.*

[279] *TVI Energy Corp. v. Blane*, 806 F.2d 1057, 1060 (Fed. Cir. 1986) (declining "[t]o limit the scope of § 1498 only to instances where the Government requires by specification that a supplier infringe another's patent" because such a reading "would defeat . . . Congressional intent").

[280] NPRM ¶ 1.

In sum, the text, legislative history, and surrounding provisions of Section 629(a) all unambiguously point in one direction: that provision does not authorize the FCC to create new rights for third parties to MVPD service in order to repackage the components of that service into new, derivative offerings, or otherwise extend its reach into the world of software development and app design that has nothing to do with the operation of set-top boxes or similar equipment used to access MVPD service. Any possible doubt is resolved by Section 629's express rule of statutory construction, and the fact that the proposed rules would, in any event, violate other parts of the Communications Act and gratuitously conflict with the provisions of intellectual property law. Whether or not one believes that the creation of new service offerings—at the cost of dismantling existing service offerings—would be a desirable policy goal is beside the point: "The FCC cannot act in the 'public interest' if the agency does not otherwise have the authority to promulgate regulations at issue."[281]

II. No Other Source of Authority Allows the FCC to Adopt the Proposed Rules.

Apart from Section 629, the NPRM suggests that Section 624A and a random assortment of other provisions might provide authority for the proposed rules. But nothing else in the Communications Act—either directly or indirectly—provides the FCC with a source of authority for its desired reshaping of the MVPD industry. In *EchoStar*, the D.C. Circuit recognized the "obvious implausibility of interpreting § 629 [itself] as empowering the FCC to take any action it deems useful in its quest to make navigation devices commercially available."[282] Accordingly, the FCC cannot rely on an even more attenuated source of rulemaking authority—be it ancillary

[281] *MPAA*, 309 F.3d at 806.

[282] *EchoStar*, 704 F.3d at 999-1000.

or otherwise—"as a proxy for omnibus powers limited only by the FCC's creativity in linking its regulatory actions to the goal of commercial availability of navigation devices."[283]

A. 624A Does Not Authorize the FCC to Adopt the Proposed Rules.

Apart from Section 629, the only provision of the Communications Act that addresses the relationship between MVPD services and third-party equipment is Section 624A, which authorized the Commission to oversee "compatibility between televisions and video cassette recorders and cable systems."[284] Although the NPRM asks whether Section 624A might support the proposed rules,[285] this rulemaking clearly has nothing to do with the interoperability of television sets, VCRs, and cable systems.[286] In any event, Congress expressly directed that Section 624A's goals "can be assured with narrow technical standards that mandate a minimum degree of common design and operation, leaving all features, functions, protocols, and other product and service options for selection through open competition in the market."[287]

Just in case Congress had not been sufficiently clear with respect to the exceedingly narrow scope of this provision, it subsequently adopted the so-called "Eshoo Amendment," which affirmatively *prohibited* the FCC, subject to certain exceptions not applicable here, from adopting rules that "affect features, functions, protocols, and other product and service options"

---

[283] *Id.* at 999.

[284] 47 U.S.C. § 544a(b)(1).

[285] NPRM ¶ 24.

[286] In *EchoStar*, the D.C. Circuit expressed skepticism as to whether Section "624A's reference to 'video cassette recorders,' now a largely antiquated technology, is adequate to sustain the FCC's purported interest in the ability of consumers to retain 'the full benefits of . . . the functionality' of their recording devices." 704 F.3d at 999, n.4. Because the court invalidated the FCC's rules on other grounds, it did not reach that question. *Id.*

[287] 47 U.S.C. § 544a(a)(4).

of cable services.[288] The proposed rules, which on their face are designed to vastly change the nature of MVPD service, would fall squarely within that prohibited category.[289]

B. No Other Source of Rulemaking Authority Can Sustain the Proposed Rules.

Because Section 629 is the only provision of the Communications Act that speaks directly to the question of third-party equipment used to access MVPD service, and Section 624(A) is not applicable, the FCC could not possibly rely on other, more attenuated provisions to justify adoption of the proposed rules in an effort to circumvent its limited powers under Section 629. "General language of a statutory provision, although broad enough to include it, will not be held to apply to a matter specifically dealt with in another part of the same enactment."[290] Nor could the FCC rely on authority purportedly ancillary to any provision of the Communications Act to avoid the limits on its regulatory authority.[291]

Whatever source of authority the FCC might invoke to adopt the proposed rules, it would run afoul of the same statutory construction problems discussed in this paper. The FCC may not exercise its rulemaking power in a manner that violates other provisions of the Communications Act,[292] creates unnecessary conflict with other statutory schemes,[293] or violates the Constitution.[294]

---

288 *Id.* § 544a(c)(2)(D).

289 Section 624A(d) provides no support for the proposed rules. *See* NPRM ¶ 24, n.77. That provision is limited by its plain terms "to modify[ing] the regulations *issued pursuant to*" Section 624A, 47 U.S.C. § 522a(d) (emphasis added). No such regulations are at issue here.

290 *Verizon*, 740 F.3d at 650 (quoting *D. Ginsberg & Sons v. Popkin*, 285 U.S. 204, 208 (1932)).

291 The D.C. Circuit has repeatedly rejected attempts by the FCC to rely on ancillary authority to act outside of the scope of its expressly delegated authority. Those failed efforts have included initiatives: to require television programmers to include aural "video descriptions" for the vision-impaired, *see MPAA*, 309 F.3d at 796; to require equipment manufacturers to honor "broadcast flag" rules designed to protect copyright interests, *see Am. Library Ass'n*, 406 F.3d at 689; and to penalize a broadband Internet service provider for a supposed violation of "net neutrality" principles, *see Comcast Corp.*, 600 F.3d at 642.

292 *See supra* Part I.B.

293 *See supra* Part I.C.

294 *See infra* Part III.

III. No Matter What the Purported Source of Authority, the Proposed Rules Would Be Unconstitutional.

No matter what the purported source of statutory authority for the proposed rules, any effort by the FCC to give third parties forced access to MVPDs' and content creators' valuable programming would run afoul of core constitutional constraints on the agency's power. The NPRM tasks private standards bodies with dictating binding technological requirements for the industry, while leaving enforcement up to a voluntary self-certification process, thereby impermissibly delegating regulatory power to politically unaccountable and bias-prone private entities. Moreover, the proposed rules violate the First Amendment by severely burdening the protected speech of MVPDs and content creators. At the very least, the proposed rules would raise serious constitutional questions.

Thus, even if the scope of the FCC's authority under Section 629, 624A, or any other provision of the Communications Act were ambiguous, which it is not, the canon of constitutional avoidance, not *Chevron* deference, would govern a court's analysis of the FCC's proposed rules.[295] No provision of law authorizes the FCC to delegate regulatory authority to private parties or to trample on the constitutional rights of MVPDs and content providers. The rules thus would fail to survive judicial review for these additional reasons.

A. The Proposed Rules Would Impermissibly Delegate Regulatory Power to Private Entities.

The NPRM attempts an end-run around the Commission's lack of statutory authority to dictate binding standards for the industry[296] by relying on private "open standards bodies" to set

---

[295] *See Bell Atl. Tel. Co.*, 24 F.3d at 1445 (explaining that although "[o]rdinarily *Chevron* . . . would supply the standard for assessment of the claimed authority, . . . statutes will be construed to defeat administrative orders that raise substantial constitutional questions").

[296] *See, e.g.*, *Am. Library Ass'n*, 406 F.3d at 691-92 (rejecting FCC's attempt to impose "broadcast flag" rules on the industry and noting that the FCC had never asserted such sweeping authority in its seventy-year history).

binding technical standards for accessing all MVPDs' content.[297] Even if the FCC possessed such authority in the first place, the Constitution prohibits it from placing its regulatory power in the hands of a private entity.[298] Moreover, the NPRM proposes that the FCC abdicate to device manufacturers, software developers, and MVPDs its core regulatory authority to enforce compliance with EAS requirements, closed captioning and other disability requirements, parental control information, and children's programming advertising limits—even though these entities in reality have no ability or expertise to enforce these requirements.[299]

Delegation of regulatory authority to private entities "is legislative delegation in its most obnoxious form; for it is not even delegation to an official or an official body, presumptively disinterested, but to private persons whose interests may be and often are adverse to the interests of others in the same business."[300] Accordingly, courts have "caution[ed] the Commission that it cannot . . . cede to private parties . . . either the right to decide contests between themselves and their opponents or even the opportunity to narrow the margins of the debate."[301] "[T]he harm done . . . to principles of political accountability" by excessive delegation "is doubled in degree in the context of a transfer of authority . . . from [an] agency to private individuals."[302]

Consistent with these foundational constitutional principles, the court in *U.S. Telecom II* rejected an attempt by the FCC to delegate unbundling decisions pursuant to Section 251 to state utility commissions, explaining that the avoidance canon, rather than *Chevron*, governed judicial

---

297 *See, e.g.*, NPRM ¶ 41 (requiring MVPDs to make their Information Flows available "in published, transparent formats that conform to specifications set by 'Open Standards Bodies'"); *see also id.* ¶¶ 2, 34-37, 44, 61.

298 *See Carter v. Carter Coal Co.*, 298 U.S. 238, 311 (1936).

299 *See* NPRM ¶ 73.

300 *Carter Coal Co.*, 298 U.S. at 311.

301 *Nat'l Ass'n of Regulatory Util. Comm'rs v. FCC*, 737 F.2d 1095, 1143 (D.C. Cir. 1984).

302 *Id.* at n.41.

review of the FCC's action.[303] "[W]hile federal agency officials may subdelegate their decision-making authority to subordinates absent evidence of contrary congressional intent," the court explained, "they may not subdelegate to outside entities—private or sovereign—*absent affirmative evidence of the authority to do so*."[304] The court spelled this point out in pointed terms: "The statutory 'silence' simply leaves that lack of authority untouched. In other words, the failure of Congress to use 'Thou Shalt Not' language doesn't create a statutory ambiguity of the sort that triggers *Chevron* deference."[305]

There is a world of difference between Section 629's mandate that the FCC "consult[] with appropriate industry standard-setting organizations"[306] while retaining its independent judgment, and punting key issues—such as the FCC's specific statutory duty not to "jeopardize security" and to safeguard compliance with statutory consumer protections—to private entities. The proposed rules clearly fall in the latter, constitutionally impermissible category.

In the regime envisioned by the NPRM, there would be no means of ensuring that the standards process would be impartial—rather than responsive to one segment of industry over others. Nor would these private entities be accountable for acting in the public interest and in conformity with requirements guiding their deliberations. The theoretical possibility that the FCC might ultimately review the standards adopted by such entities cannot save its proposal. As the D.C. Circuit has explained, the Commission may not "merely 'rubber-stamp' decisions made

---

303 *U.S. Telecom Ass'n v. FCC* ("*U.S. Telecom II*"), 359 F.3d 554, 565-66 (D.C. Cir. 2004).

304 *Id.* at 566 (emphasis added).

305 *Id.*

306 47 U.S.C. § 549(a).

by others under the guise of seeking their 'advice,' nor will vague or inadequate assertions of final reviewing authority save an unlawful subdelegation."[307]

Thus, even if the FCC had the statutory authority to adopt the proposed rules, they would still violate the Constitution by unlawfully delegating key regulatory actions to private entities.

B. The Proposed Rules Would Violate the First Amendment Rights of MVPDs and Content Providers.

The Supreme Court has long recognized that "[c]able programmers and cable operators engage in and transmit speech, and they are entitled to the protection of the speech and press provisions of the First Amendment."[308] MVPDs and programmers have the right to control their own message, to keep that message distinct from others' speech, and to promote their speech under their own brand names.[309] The proposed rules severely interfere with these rights by compelling MVPDs and programmers to endorse and associate with messages that are not their own, and by restricting their own protected editorial expression.

As an initial matter, by compelling MVPDs to disaggregate and make available aspects of their service in piecemeal components for third parties to recombine at will, the proposed rules would severely infringe MVPDs' right of editorial control over the content and presentation of their service. Similarly, the rules would interfere with the editorial judgment that content creators exercise in determining how they permit licensed distributors to present their content. As the D.C. Circuit has explained, MVPDs and programmers "exercise editorial discretion in selecting the programming they will make available to their subscribers," and these decisions

---

[307] *U.S. Telecom II*, 359 F.3d at 568 (internal citation omitted).

[308] *Turner Broad. Sys., Inc. v. FCC*, 512 U.S. 622, 636 (1994).

[309] *See Hurley v. Irish-American Gay, Lesbian and Bisexual Group of Boston*, 515 U.S. 557, 573 (1995).

"are entitled to the protection of the speech and press provisions of the First Amendment.[310] This right of editorial control extends to decisions regarding both the selection of programming as well as the manner in which that programming is organized and presented to customers.

The editorial discretion that an MVPD exercises over the selection and presentation of programming is directly analogous to that exercised by a newspaper. Both of these activities, the Court has explained, "fall squarely within the core of First Amendment security."[311] Imagine if the government sought to further the interest of facilitating access to newspapers by mandating that a newspaper make its content available as disaggregated components to third parties, who in turn could reorganize the newspaper's content—and combine it with other content—prior to delivery at the customer's doorstep. Such a mandate would be unthinkable under the First Amendment. Yet this is precisely the type of interference with free speech rights called for by the proposed rules.

By interfering with MVPDs' and programmers' right to exercise control over the selection and presentation of their service, the proposed rules would also fundamentally alter their message to the viewing public. For example, as explained in the DSTAC report, the competitive navigation proposal would enable third parties to "rearrange channel or program placement, insert different advertising into or on top of programs or use search functionalities to promote illegitimate content sources over legitimate ones."[312] As a result of such changes, "[a] user about to purchase an on-demand movie might be directed to a lower-cost pirate option" or

---

[310] *Time Warner Entm't Co., L.P. v. FCC*, 240 F.3d 1126, 1129 (D.C. Cir. 2001) (brackets and quotation marks omitted).

[311] *Hurley*, 515 U.S. at 570.

[312] DSTAC Report at 290.

"[a] programmer's title might be placed next to an X-rated offering."[313] Indeed, customers who subscribe to an MVPD's service may well assume that the line-ups, guides, menus, and applications presented on their television have been provided by the MVPD, thereby creating a forced association between the MVPD and undesirable third-party speech.[314] Moreover, these changes would affirmatively prevent MVPDs from carrying certain messages to their customers, such as through their user interfaces and guides, applications, advertising, and marketing of their own service, because they would allow third parties to remove that content and replace it with their own. Indeed, the proposed rules would *require* removal of the MVPD's user guide and interface from the Information Flows that are sent to third parties.

The proposed rules would uniquely burden MVPDs and content providers, while giving apps designers and device manufacturers free reign to compile, repackage, and present content as they please. The Supreme Court has cautioned, however, that "[r]egulations that discriminate among media, or among different speakers within a single medium, often present serious First Amendment concerns."[315] By fundamentally altering the content of MVPDs' speech, the rules would be subject to *at least* intermediate scrutiny—if not strict scrutiny. The FCC would thus be required to show, at the very least, that its rules "advance[] important governmental interests unrelated to the suppression of free speech and do[] not burden substantially more speech than necessary to further those interests."[316] The proposed rules would not come close to meeting this

---

[313] *Id.*

[314] Viewers may not assume that an MVPD endorses a particular message based on the mere fact that the MVPD carries a particular broadcast station, *see Turner Broad. Sys., Inc.*, 512 U.S. at 655, but they may well believe that an MVPD was responsible for such choices as, for example, placing Nickelodeon next to an X-rated program offering in a user guide.

[315] *Id.* at 659; *see also Citizens United v. FEC*, 558 U.S. 310, 340 (2010) (First Amendment prohibits government-imposed "restrictions distinguishing among different speakers, allowing speech by some but not others").

[316] *Time Warner Entm't Co., L.P.*, 240 F.3d at 1130 (quoting *Turner Broad. Sys., Inc. v. FCC*, 520 U.S. 180, 189 (1997).

standard. The FCC's interest in promoting the competitive availability of navigation devices cannot justify the severe burdens the rules would inflict on MVPDs' and programmers' protected free speech rights, especially in light of the existence of far less burdensome means, such as the apps approach, to comply with Section 629.

Indeed, the proposed rules impose presumptively unlawful content-based restrictions because they would have the effect of "alter[ing] the content of speech,"[317] and because they would "single out specific subject matter for differential treatment," *i.e.*, MVPD service as distinct from other forms of video programming service.[318] But in any event, this substantial interference with programming content would raise constitutional concerns even if, on their face, the rules were "content neutral." Given the First Amendment rights at stake, "Congress has been scrupulously clear when it intends to delegate authority to the FCC to address areas significantly implicating program content."[319] "[I]t does not matter that the disputed rules . . . are arguably 'content-neutral.' The point is that the rules are about program content and therefore can find no authorization in the Communications Act."[320] In *MPAA*, the D.C. Circuit applied these principles to invalidate rules that implicated content in far less substantial ways than the rules at issue here. Rather than applying *Chevron* deference, a reviewing court would apply the avoidance canon and invalidate the proposed rules.

The NPRM's effort to address the free speech issues raised by the proposed rules misses the mark. *First*, it reasons that the rules "would not interfere in any way with the MVPD's

---

[317] *See Riley v. Nat'l Fed'n of the Blind of N. Carolina, Inc.*, 487 U.S. 781, 795 (1988) (rule that "alters the content of the speech" amounts to "a content-based regulation of speech").

[318] *See Reed v. Town of Gilbert, Ariz.*, 135 S. Ct. 2218, 2223 (2015) (explaining that "a paradigmatic example of content-based discrimination" is a rule that "singles out specific subject matter for differential treatment, even if it does not target viewpoints within that subject matter").

[319] *MPAA*, 309 F.3d at 805.

[320] *Id.* at 807.

choice of content or require MVPDs to provide such content to anyone with whom they have not voluntarily entered into a subscription agreement," but rather would "simply require MVPDs to provide content of their own choosing to subscribers whom they have voluntarily agreed to provide such content."[321] This analysis completely ignores the role of third-party intermediaries—*i.e.*, the creators of navigation devices and apps. MVPDs would be forced to stream their content to these third parties, whose derivative services would strip out features of MVPD service, repackage and dramatically alter the presentation of MVPD programming, and combine that programming with other programming before it reaches MVPDs' subscribers.

Second, the NPRM's effort to claim the benefit of the standard of review reserved for government-mandated disclosures in the commercial speech context falls flat.[322] The FCC would not be compelling MVPDs to relay the data needed for accessing the MVPD's programming in order to combat deceptive advertising or even to provide purely factual and uncontroversial information to the public.[323] The mandate to provide access to these data streams to third parties is nothing like a typical commercial disclosure regarding, for example, how many calories are in a cookie or where a meat product was produced.[324] Rather, the proposed rules would compel disclosure of this data in order to enable third parties to hijack the MVPD's message to its customers and fundamentally alter it in the process. The disclosure model simply does not fit.

The proposed rules would impose these burdens on the free speech of MVPDs and content providers even though the obvious alternative of the apps-based model would satisfy Section 629 without raising these substantial First Amendment concerns. Thus, even assuming

---

[321] NPRM ¶ 45.

[322] *Id.* (citing *Zauderer v. Office of Disciplinary Council*, 471 U.S. 626 (1985)).

[323] *See Zauderer*, 471 U.S. at 651.

[324] *See Am. Meat Inst. v. USDA*, 760 F.3d 18 (D.C. Cir. 2014) (en banc) (applying *Zauderer* to Department of Agriculture labeling requirement requiring disclosure of country-of-origin information about meat products).

arguendo that the rules' infringements on free speech constitute product disclosures burdening only commercial speech, they would not survive First Amendment scrutiny because they would be "unduly burdensome."[325]

IV. The Proposed Rules Would Be Arbitrary and Capricious.

Whatever statutory authority the FCC invokes, and even setting aside the significant constitutional problems the proposed rules would trigger, the rules would fail to meet the essential requirements of reasoned decisionmaking under the Administrative Procedure Act ("APA").[326]

First, the FCC has failed to adequately explain why this new technology mandate, with the massive costs and risks that it would entail, is even necessary now that the apps-based alternative is already flourishing in the marketplace, as expressly recognized by the DSTAC. The apps approach offers a market-based solution that fully complies with Section 629 by converting a wide range of CE devices into "navigation devices" through use of a downloadable MVPD-provided app. And unlike the proposed rules, this approach does not require a radical departure from the FCC's longstanding interpretation of Section 629,[327] interfere with intellectual property rights, or spawn a host of other legal problems.

---

[325] *Zauderer*, 471 U.S. at 651; *see also Central Hudson Gas & Elec. Corp. v. Pub. Serv. Comm'n of N.Y.*, 447 U.S. 557, 571-72 (1980) (holding that an administrative agency's restrictions on commercial speech violated the First Amendment because the restrictions were "more extensive than is necessary to serve the [government] interest").

[326] 5 U.S.C. § 706(2)(A); *see generally Motor Vehicle Mfrs. Ass'n of the U.S., Inc. v. State Farm Mut. Auto. Ins. Co.*, 463 U.S. 29, 43 (1983) (agencies may not "entirely fail[]to consider an important aspect of the problem, offer[]an explanation for its decision that runs counter to the evidence before the agency, or is so implausible that it could not be ascribed to a difference in view or the product of agency expertise").

[327] *See supra* Part I.A. The NPRM does not acknowledge—much less provide a reasoned basis for—this departure, which is another APA problem. "[A]gency action is arbitrary and capricious if it departs from agency precedent without explanation." *Ramaprakash v. F.A.A.*, 346 F.3d 1121, 1124 (D.C. Cir. 2003).

In particular, as explained in NCTA's accompanying technical report, apps enable MVPDs to maintain a controlled environment with built-in protections to ensure that MVPD service is delivered consistent with all Title VI regulatory requirements, including privacy protections, delivery of EAS messages, commercial time limits for children's programming, and closed captioning.[328] MVPD-provided apps are also designed to ensure compliance with the terms of MVPDs' licensing agreements with programmers, such as distribution limits, acceptable advertising, restrictions against overlays, channel location, and the display, placement, branding, and security of content.[329] Apps also enable MVPDs to monitor and detect content security breaches and apply cybersecurity best practices.[330]

This sensible and efficient approach is *already* taking hold in the marketplace and is becoming an increasingly popular and widespread means for consumers to access video programming services on a wide variety of CE devices.[331] MVPDs have already created apps for more than 460 million Internet-connected retail devices in the United States, and consumers have downloaded more than 56 million MVPD apps to iOS and Android devices alone, with millions more occurring every month.[332] The apps approach also offers market-tested measures to

---

[328] *See* MB Docket 16-42, Sidney Skjei, Skjei Telecom, Inc., *A Technical Analysis of the FCC's Navigation Device Proposal* at 14-20 (Apr. 22, 2016).

[329] *Id.* at 21-24.

[330] *Id.* at 37-38.

[331] The clear trend toward apps-based solutions is illustrated by Comcast's announced roll-out of its: (1) XFINITY TV Partner Program, which will allow device manufacturers to incorporate an app containing Comcast's cable service (including the user guide, cloud DVR recordings, and live TV) directly into their products; and (2) apps partnerships with Roku and Samsung, which will enable Comcast customers access their cable service through Roku streaming players, Roku TVs, and Samsung smart TVs. *See* Mark Hess, *Comcast Seeks TV and Other Consumer Electronics Partners to Bring XFINITY TV Cable Service to More Retail Devices*, COMCAST VOICES BLOG (Apr. 20, 2016), http://corporate.comcast.com/comcast-voices/comcast-seeks-partners-to-bring-xfinity-tv-cable-service-to-more-retail-devices.

[332] *See* DSTAC Report at 207-08, 262. These developments belie the NPRM's conclusory assertion that "competition in the user interface and complementary features [] is essential to achieve the goals of Section 629." NPRM ¶ 12.

accommodate technological innovation and optimize the consumer experience in an increasingly competitive and dynamic market for video programming services and CE devices.[333] And it leverages technological advancements in interoperability, thereby offering both MVPDs and CE device manufacturers flexibility and diverse options to deliver and receive service and enabling them to employ the latest innovations and tailor their user experience to a specific device.[334]

Despite the clear advantages of the apps approach, and the detailed review of that option in the DSTAC report, the NPRM contains little to no discussion of this alternative. Rather, the NPRM simply assumes, without explanation, that the availability of "MVPD-provided application[s]" on a wide range of CE devices would not achieve a competitive market for navigation devices.[335] That assumption blinks reality. As the FCC itself recently acknowledged, "MVPDs increasingly compete with OVDs for viewing time, subscription revenue, and advertising revenue," and have responded to this competition "by creating and deploying services . . . allow[ing] MVPD subscribers to access both linear and video-on-demand ('VOD') programming on a variety of in-home and mobile Internet-connected devices," with "recent initiatives include[ing] making more video content available, supporting more viewing devices, and offering more viewing options for video programming outside the home."[336] Even where the

---

[333] DSTAC Report at 264-65.

[334] *Id.* at 263.

[335] *See, e.g.*, NPRM ¶ 13.

[336] *In the Matter of Annual Assessment of the Status of Competition in the Mkt. for the Delivery of Video Programming*, 30 F.C.C. Rcd. 3253, 3265, ¶¶ 83, 85 (2015); *see id.* at 3295-96, ¶¶ 96, 97 (MVPD apps "offer subscribers the ability to view video content online using Internet connected devices (*e.g.*, computers, tablets, and smartphones)" and MVPDs are "expand[ing] [their] service offerings" via such apps).

FCC acts within the scope of its delegated authority, its action is unlawful when, as here, it is predicated on "[t]he Commission's naked disregard for the competitive context."[337]

The NPRM summarily dismisses the apps approach because not all MVPDs currently have agreements for apps with all comers.[338] Section 629, however, only enables the FCC to take steps to establish a competitive marketplace for certain equipment; it does not require or even authorize the FCC to ensure success for every would-be market participant. Yet that is the FCC's basis for rejecting the apps approach. This cursory and unsupported treatment of the apps approach cannot save the proposed rules. "It is well settled that an agency has a duty to consider responsible alternatives to its chosen policy and to give a reasoned explanation for its rejection of such alternatives"; "[t]he failure of an agency to consider obvious alternatives has led uniformly to reversal."[339] Rather than considering the apps approach, the FCC cavalierly rejects it.

Because the sole purpose of the proposed new technology mandate is to fix a supposed problem that the market is already solving on its own, it cannot stand. Even "a regulation perfectly reasonable and appropriate in the face of a given problem may be highly capricious if that problem does not exist."[340]

Second, the NPRM is riddled with gaping holes that go to the heart of what the proposed rules will ultimately require and how they would operate in practice, and it fails to even

---

[337] *U.S. Telecom I*, 290 F.3d at 428 (vacating FCC order because "in ordering [Section 251] unbundling of the high frequency spectrum of copper loop so as to enable [competitive local exchange carriers] to provide DSL services, [the FCC] completely failed to consider the relevance of competition in broadband services coming from cable"); *see also Fox Television Stations, Inc. v. FCC*, 280 F.3d 1027, 1051 (D.C. Cir.), *opinion modified on reh'g*, 293 F.3d 537 (D.C. Cir. 2002) (vacating FCC rules governing cable ownership limits because "[t]he Commission failed to consider competition from DBS"); *Time Warner Entm't Co., L.P.*, 240 F.3d at 1134 (the FCC's assessment of a cable operator's market power must "take account of the impact of DBS").

[338] *See* NPRM ¶ 50.

[339] *City of Brookings Mun. Tel. Co. v. FCC*, 822 F.2d 1153, 1169 (D.C. Cir. 1987) (quotation marks omitted).

[340] *ALLTEL Corp. v. FCC*, 838 F.2d 551, 561 (D.C. Cir. 1988) (quotation marks omitted).

acknowledge the major legal issues the rules would create. For example, the NPRM fails to grapple with the nature of the security system for accessing MVPD content, even though it proposes to dismantle the trust infrastructure and security architectures, cede control over critical layers of security to third parties, and impose new limitations on security providers. The proposed rules would also impermissibly delegate to private and as-of-yet unidentified standards bodies the task of dictating technical specifications governing the imagined Information Flows. Furthermore, the NPRM waves off concerns regarding consumer privacy protections, reasoning that consumer privacy can be protected by third parties' promises to honor rules that the FCC has no authority to enforce against them and the assumption that MVPDs will police compliance without the technical or legal means to monitor what the retail devices and applications are doing. The NPRM also casually disregards numerous other legal and technological obstacles, such as the proposed rules' adverse impact on minority programmers,[341] based on its unsupported view that these concerns are exaggerated or will not come to pass, and it ignores the many intellectual property problems that would arise.[342]

The FCC's "predictive judgment" cannot save the proposed rules. Although the Commission receives some deference with respect to such judgments, it may not "treat the predictive nature of the judgment as though it were a talisman under which any agency decision

---

[341] The FCC blithely rejects these concerns, stating its "expectation" that the rules "will make it easier for consumers to find and watch minority and special interest programming." NPRM ¶ 17. This "expectation" directly contradicts the views of the relevant programmers. *See, e.g.*, Feb. 11, 2016 Future of TV Coalition Ex Parte; Jan. 21, 2016 FuseMedia Ex Parte (highlighting adverse impact on "smaller independent programmers, like Fuse Media, serving ethnic niche audiences"). In fact, Congress has asked the Government Accountability Office to investigate the rules' impact on minority programmers, expressing "concern[] that the agency's efforts do not include a meaningful assessment of the effects on independent and diverse networks, whose business models may be greatly threatened and undermined by the FCC's proposed rules." Bipartisan Letter from House Communications and Technology Subcommittee to Gene L. Dodaro, Comptroller General, Gov't Accountability Office, April 1, 2016.

[342] *See, e.g.*, NPRM ¶ 80 (declining to propose rules to address "concerns raised by MVPDs and content providers that competitive navigation solutions will disrupt elements of service presentation (such as agreed-upon channel lineups and neighborhoods), replace or alter advertising, or improperly manipulate content").

is by definition unimpeachable."[343] When agency action is predicated on predictive judgments, it must still be "grounded in substantial evidence,"[344] not mere "*ipse dixit*."[345] Because the NPRM's claims that certain dangers will not come to pass rest on "sheer speculation" rather than "logic and evidence,"[346] the proposed rules cannot stand.

It is patently unreasonable for the FCC to adopt rules that create major legal and practical problems and then simply leave MVPDs (and their customers) to clean up the mess. "[T]he FCC act[s] irrationally in glossing over gaping holes" in its rulemaking[347] and leaving "serious concerns unaddressed."[348]

Fourth, the NPRM fails to reconcile the proposed rules with contrary recommendations in the DSTAC report from a diverse cross-section of experts selected by the FCC Chairman himself. Despite the areas of disagreement, *all* parties agreed that "[i]t is not reasonable to expect that all MVPDs will re-architect their networks in order to converge on a common solution," that it "is unreasonable to expect that MVPDs will modify their access networks to converge on a single common security solution," "that the downloaded security components need to remain in the control of the MVPD," and that "[i]t should not be necessary to disturb the potentially multiple present and future [conditional access]/DRM system choices made by cable, [satellite], and [internet protocol television] systems."[349] The NPRM, though purportedly

---

[343] *Int'l Ladies' Garment Workers' Union v. Donovan*, 722 F.2d 795, 821 (D.C. Cir. 1983) (internal quotation marks omitted).

[344] *Verizon*, 740 F.3d at 644-45.

[345] *Bus. Roundtable v. SEC*, 647 F.3d 1144, 1155 (D.C. Cir. 2011).

[346] *Sorenson Commc'ns Inc. v. FCC*, 755 F.3d 702, 708 (D.C. Cir. 2014).

[347] *City of Brookings Mun. Tel. Co.*, 822 F.2d at 1168.

[348] *Sorenson Commc'ns Inc.*, 755 F.3d at 710 (quoting *Verizon*, 740 F.3d at 663).

[349] DSTAC Report at 3.

informed by DSTAC's findings, totally ignores these "major points of agreement."[350] "[T]he Commission must do more than simply ignore comments that challenge its assumptions and must come forward with [an] explanation [of why] its view is based on . . . reasonable analysis."[351]

Finally, the NPRM fails to address the immense costs the proposed rules would impose on the industry and society at large, and to weigh these costs against the purported benefits. Aside from the direct benefits to interested third parties, such as TiVo and Google, the rules' benefits are entirely speculative. The Supreme Court has made clear that "agency action is lawful only if it rests on a consideration of the relevant factors" and "cost" is undoubtedly "a centrally relevant factor when deciding whether to regulate."[352] "[C]ost includes more than the expense of complying with the regulations," encompassing "any disadvantage" the rules impose.[353] Courts have likewise vacated FCC unbundling orders in the Section 251 context for failure to adequately weigh the costs against the benefits of those orders.[354]

Under these precedents, the massive costs of the proposed rules would far exceed the benefits and therefore are patently unreasonable. As detailed in NCTA's technical paper,[355] the rules would require significant and expensive changes to MVPDs' existing architectures and systems, thereby compromising the ability of MVPD networks and MVPD services to innovate, and/or require consumers to retain a second device. The rules would also severely devalue the

---

350 *Id.* at 2.

351 *ALLTEL Corp.*, 838 F.2d at 558.

352 *Michigan v. E.P.A.*, 135 S. Ct. 2699, 2706-07 (2015); *see also State Farm*, 463 U.S. at 54 (reasoned decisionmaking requires consideration of "the costs as well as the benefits" of agency action).

353 *Michigan*, 135 S. Ct. at 2707 (quotation marks omitted).

354 *See U.S. Telecom I*, 290 F.3d at 428.

355 *See* MB Docket 16-42, Sidney Skjei, Skjei Telecom, Inc., *A Technical Analysis of the FCC's Navigation Device Proposal* at 30-34, 45-46.

intellectual property rights of MVPDs and content creators and open the floodgates for patent litigation in an already heavily litigated field. And they would substantially undermine the security and anti-piracy efforts that sustain commercial video, while threatening privacy and other consumer protections and interposing myriad barriers to innovation in networks, services, and security.[356] All of this will, in turn, deter companies from making the substantial investments needed to fund future technological innovation as well as high-quality content at great societal cost that defies calculation. The NPRM's failure to account for these costs is especially egregious given that these costs are entirely avoidable: Section 629's requirements can be fully satisfied without these harms to continued innovation under the existing apps-based model. Without an adequate explanation of how these tremendous costs outweigh the supposed benefits of the proposal, any final rules would be arbitrary and capricious.

CONCLUSION

The proposed rules would contravene clear congressional intent under Section 629, violate other provisions of the Communications Act, obliterate well-established intellectual property rights, transgress constitutional limits on the FCC's power, and flout the basic requirements of reasoned decisionmaking. Heavy-handed technology mandates like the regime set out in the NPRM are likely to result in more cost, increased technological complexity, and lower-quality content for consumers. Consistent with the FCC's duty to act within the bounds of the authority delegated to it by Congress, and to serve the public interest rather than the private interest of a favored few, the FCC should abandon the proposed rules.

---

[356] *See generally id.* at 14-21, 30, 36; *see also* MB Docket 16-42, NCTA Comments at 64 *et seq.* (Apr. 22, 2016).

APPENDIX B

A TECHNICAL ANALYSIS OF THE FCC'S NAVIGATION DEVICE PROPOSAL

Sidney Skjei

A Technical Analysis of the FCC's Navigation Device Proposal

Sidney Skjei

Skjei Telecom, Inc.

April 22, 2016

Sidney Skjei
Skjei Telecom, Inc.
7777 Leesburg Pike, Suite 315N
Falls Church, VA 22043

TABLE OF CONTENTS

Page

INTRODUCTION AND SUMMARY 1

I. THE FCC PROPOSAL DOES NOT PROVIDE MVPD SERVICE TO RETAIL NAVIGATION DEVICES 3

A. How MVPD Services Are Delivered Today 3

1. Background 3

2. Apps, Security, and Trust Infrastructures 5

B. How the FCC Proposal Prevents MVPDs from Delivering Their Services to Retail Navigation Devices as Marketed, Designed and Offered 9

II. THE FCC PROPOSAL DOES NOT SUPPORT EXISTING REGULATORY REQUIREMENTS 14

A. Privacy 15

B. Advertising Restrictions 17

C. EAS 17

D. Accessibility 18

1. Closed Captioning 18

2. Contact Information 18

3. Talking Guide 19

4. Video Description 19

5. Emergency Information ("EI") 19

E. Must Carry Channel Location 19

F. MVPDS' Ability to Police Third-Party Navigation Device Compliance with Regulatory Requirements 20

III. THE FCC PROPOSAL DOES NOT SUPPORT MVPDS' ABILITY TO SATISFY THEIR CONTRACTUAL COMMITMENTS TO PROGRAMMERS 21

IV. THE FCC PROPOSAL IMPEDES INNOVATION AND TECHNOLOGICAL PROGRESS IN MVPD NETWORKS 24

A. Innovation in MVPD Networks and Services Today 24

B. Innovation Using MVPD Apps Today 28

C. The Relationship Between Apps and Innovation 29

D. Impact of the NPRM on Innovation 30

1. Entitlement Data and Innovation in Consumer Offerings 31

2. Content Delivery Interface and Video and Audio Innovation 31

3. Content Delivery Interface and Innovation in Bandwidth Management 32

4. Impact of Fixed Hardware Interfaces on Innovation 32
5. "Parity" and Innovation in Cloud-Based "Boxless" Solutions 33
6. "Parity" and Bandwidth Management 33
7. "Parity" and Security 34
8. IP Multicasting: A case study on the NPRM's fundamental design flaw that impedes innovation and technological progress by MVPDs 35

V. THE FCC PROPOSAL WEAKENS SECURITY AND INCREASES THREATS OF THEFT-OF-SERVICE 36
A. Cyberspace 36
B. Apps Security 37
C. Cybersecurity 38
D. NIST Cybersecurity Framework 40
E. Supply Chain Risk Management 42
F. Content Protection vs. Security 44

VI. THE FCC-PROPOSED MANDATORY ARCHITECTURE REQUIRES A NEW IN-HOME BOX FROM MVPDS TO SUPPORT RETAIL DEVICES 45

VII. THE FCC PROPOSAL HAS NOT ACCOUNTED FOR COSTS 47
A. DCAS (Downloadable Conditional Access Security) 47
B. Case History: The Chip-Enabled Credit-Card Payment System 47
C. FCC Proposal Ignores Costs 49
D. The FCC Proposal Imposes High Costs to Energy Efficiency 50
E. FCC Proposal Increases Costs Further By Isolating the U.S. Cable Industry from Global Development Tools and Community 54

VIII. CONCLUSION 54

A Technical Analysis of the FCC's Navigation Device Proposal

Sidney Skjei

Skjei Telecom, Inc.

April 22, 2016

INTRODUCTION AND SUMMARY

The Federal Communications Commission's 2016 Notice of Proposed Rulemaking on Navigation Devices[1] proposes a set of new requirements for multichannel video programming distributors (MVPDs) to deliver information flows of programming and metadata to retail devices and applications. This White Paper provides a technical evaluation of that proposal.

Section I describes the modern technical operations of MVPDs and explains why the FCC proposal does not provide MVPDs with the technical means required to present their service to subscribers on retail devices as the MVPD service is marketed, designed and offered.

With the transition from analog transmission of television signals to digital delivery, terminal devices for pay TV services have evolved from receivers of simple audiovisual broadcasts into devices that are essentially network-attached computers. Like Netflix and other online video services, MVPDs rely on apps for delivering modern pay TV services to MVPD-provided devices or to customer-owned retail devices like tablets, smart phones, smart TVs, game consoles, media players such as Roku, and PCs. Apps operate to enforce the interdependent agreements and "trust infrastructure" that connects content providers, advertisers, metadata providers, distributors, hardware, chip, middleware and software providers, security vendors, device platforms, device operating systems, and leased and retail devices. The agreements address such issues as license obligations, breach resolution, warranty, indemnification, Intellectual Property Rights, audit trails, financial responsibility and data protection – protections without which MVPDs could not gain access to content. Apps include the code that allows the service to interact with the network and present service in a trusted application execution environment *within* the app that runs on the device and to interact with device resources to present service. Apps require access to a trusted application execution environment in which to run, or they will not deliver service.

The FCC proposal does not provide MVPDs with access to a trusted application execution environment within the retail device. As a consequence, it would deny MVPDs the technical means required to present their service to subscribers as designed and marketed. This section details the features of MVPD service that would not operate properly under the proposal, including: interactive features; video-on-demand; selectable output control; network bandwidth management; and user authentication.

---

[1] Expanding Consumers' Video Navigation Choices; Commercial Availability of Navigation Devices, Notice of Proposed Rulemaking, MB Docket 16-42, 18 Fed. Reg. 14033 (March 16, 2016) ("NPRM").

Section II describes the range of statutory and regulatory consumer-protection and other obligations applied to MVPD service. Meeting those requirements and monitoring device behavior require the interactivity and access to a trusted application execution environment that underlie the apps-based approach.

The FCC proposal requires MVPDs to police third-party retail devices and third-party apps for regulatory compliance. Unfortunately, MVPDs would have no ability to ensure that third-party devices and apps meet these regulatory obligations, due to the absence of MVPD apps and contractual relations with the third parties. As a consequence, the FCC proposal fails to provide technical support for these regulatory requirements.

Section III describes the range of contractual obligations that MVPDs negotiate with content creators and suppliers to obtain the right to distribute programming via linear channels, VOD assets, and other formats. Those negotiated rights typically come with restrictions that define and constrain how the content may and may not be presented to subscribers. MVPDs meet those obligations through the integration of licenses, apps, software and hardware platforms, and other technical means that are part of the trust infrastructure.

However, as previously stated, the FCC proposal fails to provide MVPDs with access to a trusted application execution on third-party devices. As a consequence, the FCC proposal fails to provide technical support for these programming requirements.

Section IV describes how innovation occurs in today's environment of technological diversity and rapid change across MVPDs. The NPRM is incorrect in stating that "most MVPDs have coalesced around a few standards and specifications for delivery of the video content itself." This section describes the diversity and how MVPDs have been able to compete and launch innovative solutions that leverage their unique network capabilities and infrastructure without awaiting industry agreement on a standard technology or implementation. MVPDs have used apps in the retail market to enable similar innovation. Apps abstract that diversity and complexity of service providers and customer-owned devices, allow MVPDs to utilize and leverage their unique and rapidly changing network capabilities and infrastructure, and enable rapid and independent innovation by MVPDs in networks, in MVPD services, and by device manufacturers in devices and device platforms. All app developers and publishers create end-to-end interactive systems with application code running on the device as an integral part of an end-to-end system.

By inserting fixed interfaces for streaming video, service discovery, or entitlements into the network, the NPRM compromises the ability of MVPD networks and MVPD services to innovate. The FCC-required interfaces, proposals for "parity," and limitations on acceptable content protection systems operate to constrain innovation. New retail offerings would be limited and delayed. Audio and video formats, resolution, and encoding would be frozen or left to lengthy standards processes. Specific transport and content formats would be constrained to the interface standard even as more bandwidth efficient technologies emerge. The NPRM would create significant barriers to MVPDs' migrations to "boxless" solutions; constrain the management of limited network resources; and deprive content owners' of their ability to segment the market and experiment with new offerings.

Section V describes how MVPD security and cybersecurity best practices are maintained today through a combination of conditional access and Digital Rights Management ("DRM") services, apps, and licenses all operating in a well-understood hardware environment.

The FCC proposal discusses a form of content protection, but content protection (whether a DRM or link-layer security such as DTCP-IP) alone does not technically enforce essential requirements of content licenses, data security, or the protection of networks, content, and customers. The FCC proposal fails to follow the National Institute of Standards and Technology ("NIST") Cybersecurity Framework or the FCC Communications, Security, Reliability and Interoperability Council ("CSRIC") cybersecurity best practices, essentially treating security as an afterthought and thereby posing a significant risk of compromise, theft of service and device cloning.

Section VI describes how as a practical matter, the FCC proposal will require cable, and not just satellite operators, to create a new in-home termination device that translates its output into the three information flows to connect to a new retail box. The FCC proposal would force MVPDs into a two-box in-home solution because designing the network to support the mandated information flows would consume spectrum and network capacity and handicap MVPD network development by locking in artificial standards that constrain network and service evolution.

Section VII describes the significant design, development and implementation costs required by the FCC proposal. The FCC proposal has failed to evaluate these costs, but the scale and scope of such costs are illustrated with examples from Charter's recent program to overlay a new downloadable security system and by analogy to the conversion of credit-card payment systems to the chip-enabled standard. Other costs are identified, including costs in overall energy consumption and costs of isolating the U.S. cable industry from global development tools and the broader development community.

I. THE FCC PROPOSAL DOES NOT PROVIDE MVPD SERVICE TO RETAIL NAVIGATION DEVICES

A. How MVPD Services Are Delivered Today

1. Background

The services that multichannel video programming distributors – DBS operators, telcos, and cable MSOs – provide today bear little resemblance to the analog-only cable offerings that were the standard twenty years ago. With the transition from analog transmission of television signals to digital delivery, terminal devices for pay TV services evolved from simple analog tuner/descramblers to devices that are essentially network-attached computers with special purpose radio frequency (RF) processing, embedded security and video processing hardware. Subsequent to this analog-to-digital transition, the growth of broadband Internet access and over-the-top video streaming services has enabled a wealth of personal computers, tablets, smart phones and other retail devices to access both subscription and pay-per-view TV services via an IP connection. As detailed in this White Paper, the experience provided by MVPDs has been transformed from a simple broadcast of an audiovisual signal over a transmission medium (such as coaxial cable) into a rich interactive experience that shares more in common with online "over

the top" services delivered through apps (such as Netflix or Sling TV) than it shares with the analog broadcasts of the mid 1990s. Apps have become an essential component for delivering pay TV services today.

Today, virtually every pay TV experience provided by a multichannel video programming distributor ("MVPD") or Online Video Distributor ("OVD") is provided through a software app, whether that app is running on an MVPD- or OVD-provided device, on a retail device (tablet, smart phone, smart TV, game console, media player device such as Roku, etc.) or on a PC in a web browser.[2] The pay TV experience is a combination of not only the TV content offered by the MVPD or OVD, but also rich interactive content and features that consumers use to find, navigate to and interact with the service. Apps provide the means for delivering modern MVPD services and for doing so securely, as marketed and intended by the MVPD, in accordance with the requirements of its content suppliers, and with the network-monitoring capabilities necessary to manage their services, comply with regulatory obligations, and satisfy contractual commitments to programming suppliers.

Apps have proven to be the most efficient and operationally sound method available to securely deliver all of the components that a modern-day service entails, which now include such features as:

- Linear content;
- Video-On-Demand ("VOD"), including differentiating features such as the ability to watch a VOD title for non-traditional periods of time (for example, until end of month rather than for 48 hours);
- A User Interface ("UI") and interactive Electronic Program Guide ("EPG");
- Content discovery and recommendation engines, such as suggestions based on parental controls and viewer preferences;
- Rich programming descriptions provided via the EPG and other content-navigation tools;
- News, weather, and sports apps;
- Social-network integration to allow a variety of social interactions while watching television;
- "Telescoping" advertisements that provide additional information in response to user interaction;
- On-screen, interactive customer-support capabilities ("I would like to change my subscription," "I would like technical help," or "I would like to buy this movie");

[2] Use of the term "app" in this White Paper includes native code apps that are downloaded to devices, as well as JavaScript applications that work with browsers, e.g., HTML5 browsers.

- On-screen caller-ID and call management (for example, the ability to "send the incoming call directly to voicemail");
- Access on any device to favorite channels and last channels tuned;
- The ability to pause a program on one device and resume playback on another;
- Electronic Sell-Through ("EST"), which allows customers to buy (rather than rent) a digital copy of a movie and play it on any device;
- "Day-and-Date" availability for theatrical release movies;
- T-Commerce (that is, the ability to shop using a remote control); and
- Other rich, bidirectional capabilities that enhance customers' ability to find, navigate to, and interact with the service.[3]

Apps are an essential part of the way in which an MVPD competes to provide these features and present them as marketed and designed by the MVPD for the end users' subscriptions. As explained below, they also are a critical component of the "trust infrastructure" that MVPDs depend on to provide the level of security demanded by content providers and other sources of copyrighted material (for example, EPG metadata providers).

2. Apps, Security, and Trust Infrastructures

To appreciate the critical role that apps play, it is necessary to understand how licensed distributors of video today provide the required level of protection to the content and other copyrighted material that they license. "Trust Infrastructures" – that is, the web of interconnections, interdependencies, and contractual relationships between the providers of hardware, software, content, and app – today are the standard, comprehensive approach to service presentation and security in the video marketplace.

A trust infrastructure integrates all of the components required for the secure delivery of video – from hardware to app – from end-to-end. As with chains, trust infrastructures are only as strong as their weakest links: a security failure impacting just one of these interdependent components has the potential to expose service and content to theft. Figure 1, below, is a generic diagram depicting the hardware and software layers found in devices that enable the secure delivery of licensed video.

[3] Many of these features were described in greater detail in the DSTAC Final Report at 178-200 (Working Group 4 Report ("DSTAC WG4") at 43-65).

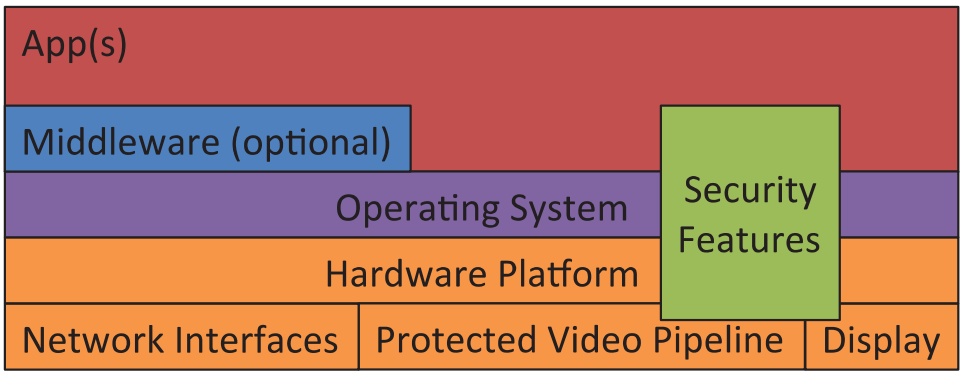

Figure 1 – Generic Device Layer Diagram

Near the bottom of this diagram is the hardware platform itself. It contains memory, a processor, network interfaces, a protected video pipeline, and either an integrated display or an interface to an external display, for example an HDMI output. Above the hardware platform is the Operating System ("OS") that performs the basic control and management of that hardware. The OS also exposes Application Program Interfaces ("API") to apps to allow them to interact with the underlying Hardware platform. Optionally, there may be a middleware layer (such as Java or HTML5/JavaScript) between the OS and the app which allows developers to write apps to the middleware and have those apps run on multiple Hardware/OS platforms that include that middleware (the "write-once, run-anywhere" principle).

Retail CE devices do not offer the same trusted application execution environment that a multichannel provider relies upon in its leased set-top boxes, nor do they all offer a common execution environment in their own devices. As DSTAC reported, "Android, iOS, and HTML all differ from each other, and an Android app is not an iOS app and neither is HTML, although they may behave identically to an end-user. Likewise, the Microsoft Xbox, Nintendo Wii and Sony PlayStation platforms each have their own unique development environment, interface, streaming platform and encryption technology. Connected televisions use competing middleware. Panasonic is using Firefox OS. Sony, Sharp, and TP Vision are using Android TV. Vizio uses the Yahoo Connected TV Platform. Samsung just announced its new Tizen platform. LG uses webOS. Apple will use iOS."[4] Even since DSTAC, retail CE devices have changed their platforms. Vizio, for example, now runs apps on an Android OS tablet that wirelessly streams to their TVs. MVPDs, like other publishers, write different apps to present their services in different application execution environments. The apps themselves can be written either to the OS or, if available, the middleware layer or browser.

The apps, in turn, include the code that allows the service to interact with the network and present service in a trusted application execution environment *within* the app that runs on the device and interacts with device resources – such as video displays and outputs or audio controls – using the specific APIs available in that device's OS or middleware.

[4] DSTAC Final Report at 39 (Working Group 2 Report ("DSTAC WG2") at 12).

Also shown in Figure 1 are some of the security features of the overall trust infrastructure specific to the hardware and software layers. (The precise nature of these security features will vary from device to device and from implementation to implementation, and are part of a larger trust infrastructure extending well beyond the device.)

Hardware. Chip manufacturers compete based on the coverage and robustness of the security features in their Systems on a Chip (SoC)s, which typically include such measures as:

- Tamper-resistant hardware;
- One-time-programmable memory for device identity, to prevent cloning;
- Secure storage for private keys and related secrets;
- Infrastructure compatible with recovering from compromises (hacks);
- A Trusted Execution Environment (TEE); and
- A protected video path to prevent attacks on the video decoding.

Software. The OS security features may include secure boot and code signing to insure the integrity of the OS. The OS may also use code signing to ensure the integrity of apps and middleware software.

Hardware and software (including DRM, discussed below) provide the necessary technical foundation for modern video services. Operating independently, however they cannot adequately protect those services. Rather, they perform their well-defined roles within the broader context of the overall trust infrastructure assembled by the video distributor.

Trust Infrastructures and MVPD-Provided Devices. Figure 2, below, taken from the DSTAC Working Group 2 Report, depicts the type of trust infrastructure common to the leased devices designed and deployed by MVPDs.[5] This overview is not intended to be exhaustive or a representation of any MVPD's actual trust infrastructure, but rather to illustrate the interrelationships that are common in such security systems. It depicts the web of contractual interdependencies between MVPDs, security vendors, and content providers that, collectively, provide the legal and financial system for parties to perform their roles within the broader trust infrastructure – and thus ensures the overall integrity of MVPDs' service.

[5] DSTAC Final Report at 52 (DSTAC WG2 at 25): "The MVPD also contracts with multiple parties to implement a complete solution including: CAS vendors, set-top box manufacturers, set-top box application providers, and set-top box middleware providers (1, 2, 20, 21, 22). These include breach resolution, warranty, and indemnification against IPR infringement, service level agreement (SLA), and other terms that are frequently derived from content licenses" and at 53 (DSTAC WG2 at 26): "The application implements portions of the overall service security."

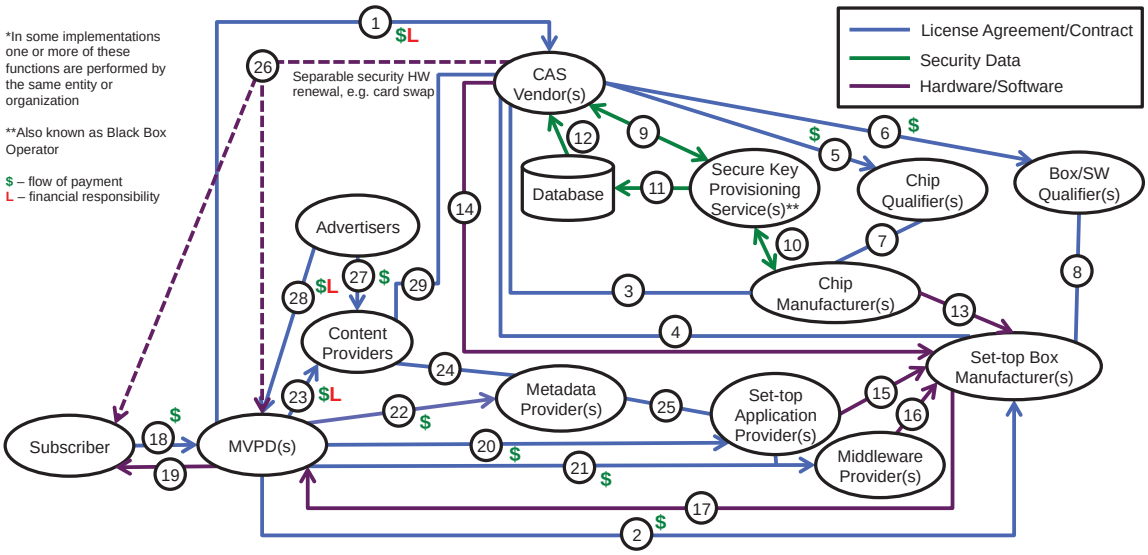

Figure 2 - Example of an MVPD Trust Infrastructure

As shown above, MVPDs establish their trust infrastructures through agreements with a wide range of vendors. These can include Conditional Access System ("CAS") vendors (1), set-top box manufacturers (2), set-top box application providers (20), middleware providers (21), metadata providers (22), and advertisers (28). Those agreements contain provisions addressing such issues as license obligations, breach resolution, warranty, indemnification, Intellectual Property Rights ("IPR"), approved SoCs, audit trails, data protection, and Service Level Agreements ("SLAs") – protections without which MVPDs could not gain access to content, particularly high-value content (for example, video in 4K format). These agreements also assign financial responsibility in the event of a breach or non-compliance.[6]

Trust Infrastructures and Retail Devices. Similar trust infrastructures are employed in retail devices to secure service using DRM. Figure 3, below, also from the DSTAC Working Group 2 Report,[7] depicts the types of contractual interrelationships between the content distributor (whether an MVPD, an OVD, or a content provider itself), security vendors, and content providers employed to establish trust infrastructures in the retail context.

[6] A trust infrastructure also requires contractual commitments between MVPDs' vendors themselves: for example, the CAS vendor may license IPR to a chip vendor (3), a set-top box manufacturer (4), a third-party chip qualifier (5), or a third-party set-top box hardware and software qualifier (6). Similar relationships involving other vendors are depicted in (7) - (16), (24) – (27), and (29).

[7] DSTAC Final Report at 54 (DSTAC WG2 at 27).

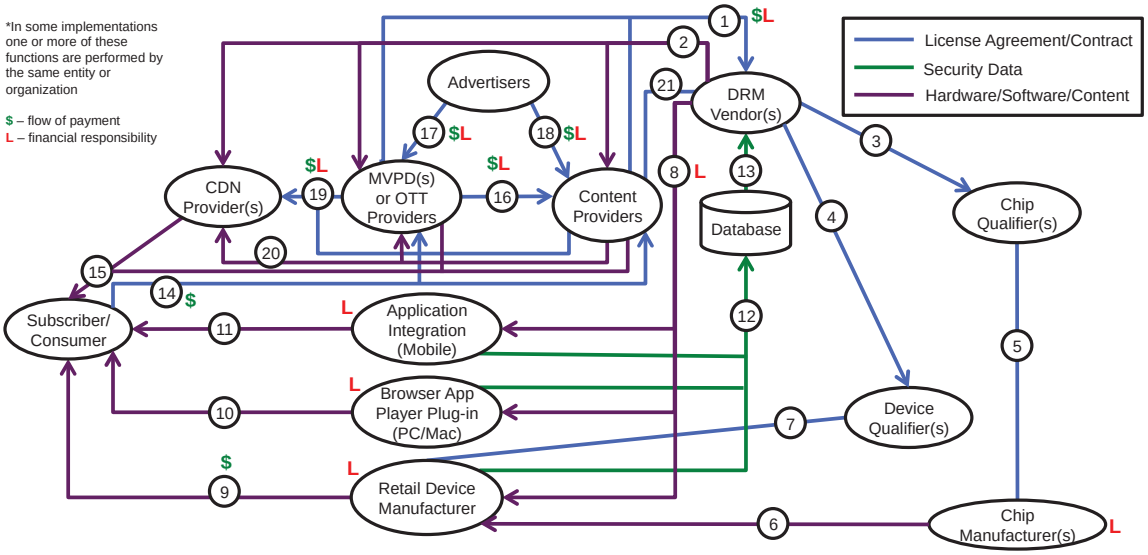

Figure 3 - Example of a Retail Trust Infrastructure

Figure 3 depicts the contractual interdependencies common to a trust infrastructure in the retail context. As in Figure 2, the MVPD enters into agreements with a range of vendors, which can include: one or more DRM vendors (1); content providers (16); advertisers (17); and Content Delivery Network ("CDN") providers (19). Again, these agreements typically contain provisions addressing issues including license obligations, breach resolution, warranty, indemnification, IPR, approved SoCs, audit trails, data protection, and service level agreements. They also assign financial responsibility in the event of a breach or non-compliance. Contractual interrelationships, with similar requirements and remedies, exist between the vendors themselves, as well. For example, (3) represents the agreement between a DRM and a third-party chip qualifier, while (7) indicates that there may be a direct agreement between the device manufacturer and the device qualifier.

B. How the FCC Proposal Prevents MVPDs from Delivering Their Services to Retail Navigation Devices as Marketed, Designed and Offered

As explained above, MVPDs rely upon apps to deliver their services. Apps, meanwhile, require access to a trusted application execution environment in which to run – otherwise they will not deliver service. In other words, the presentation of service and the overall security of the trust infrastructure depend upon not just the app itself, but on the environment in which the app executes as well:

- In MVPD-supplied devices, the trust infrastructure implements mechanisms to ensure that the trusted application execution environment and the application itself are secured and trusted through various means, such as code signing and tamper resistant software and hardware. Such measures impede the ability of hackers to tamper with the application or trusted application execution environment, which could allow them to compromise the overall security and thereby steal service or steal content.

- In the case of retail devices running MVPD apps, the retail platform provides a trusted application execution environment with mechanisms to ensure that apps are securely downloaded to the retail device and that that execution environment is secured against tampering. Examples of trusted application execution environments in retail devices were discussed in detail in the DSTAC Working Group 4 Report[8] and include:

    - Apple's iOS for iPhones and iPads;[9]
    - Google's Android;
    - Samsung's Tizen;
    - LG's webOS; and
    - Roku's Roku OS.

All of these trusted application execution environments support multiple DRMs for content protection and offer various security features through their app guidelines and app stores to provide the level of trust possible given the specific hardware and software contained within the device.[10]

The NPRM, however, fails to provide MVPDs with access to a trusted application execution environment within the retail device. As a consequence, it would deny MVPDs the technical means required to securely present their service to subscribers as marketed, designed and offered by the MVPD.[11] Consumers would not receive the MVPD's electronic program guide, content discovery and recommendation functions, apps that provide news, weather, and sports statistics, telescoped information available with a click, caller-ID and call disposition (send to voicemail) on TV, the ability to pause viewing on one device and resume viewing on

---

[8] DSTAC Final Report at 266 (DSTAC WG4 at 131), Table 10.

[9] Apple added tvOS for the Apple TV device after the DSTAC Report was completed.

[10] As described in the DSTAC Working Group 4 Report, iOS apps are "developed, tested, and distributed using guidelines and tools that Apple provides to all developers. Apple regulates applications and their functionality by enforcing a testing process that occurs upon submission of an app to the iTunes Store…. During this time, their testers evaluate the app against a strict set of requirements which ensures that the submitted applications perform as desired on selected platforms, do not violate any of Apple's terms and conditions, and do not provide an outlet for any illegal activity." DSTAC Final Report at 267 (DSTAC WG4 at 132), Table 12. Similar conditions are used for other trusted application execution environments in which MVPD-provided apps are run on retail devices.

[11] By contrast, the World Wide Web Consortium ("W3C"), through the development of HTML5, has *improved* the security of the web app environment. HTML5 extends the trust infrastructures relied upon in mobile apps to web browsers. In particular, the introduction of the HTML5 video element has allowed browser developers to migrate away from unsecure video player plugins; for example, Google's Chrome and Mozilla's Firefox browsers stopped supporting Adobe's Flash browser plug-in in July 2015 after learning that its security flaws had been the source of numerous hacks. "Google and Mozilla pull the plug on Adobe Flash: Tech giants disable the program on browsers following 'critical' security flaw," Daily Mail, July 14, 2015, http://www.dailymail.co.uk/sciencetech/article-3160644/Google-Mozilla-pull-plug-Adobe-Flash-Tech-giants-disable-program-browsers-following-critical-security-flaw.html.

another, shop-by-remote features, and other rich interactive features that consumers use to find, navigate to and interact with the service. The discussion below highlights several common features of modern service that MVPDs could no longer provide to their subscribers if the proposed rules were adopted.

Video on Demand (VOD). By denying MVPDs access to a trusted application execution environment, the proposed approach threatens the operation of VOD. As described in the DSTAC Working Group 4 Report,[12] numerous aspects of VOD require MVPD access a trusted application execution environment. These include:

- The requirement for a verifiable audit trail for VOD purchases and usage. This is necessary not only for resolving customer support and billing issues, but also for reporting back to content providers for settlement purposes;
- The ability to create unique use rights;
- The ability to set pricing on a per-asset basis;
- The ability to enable EST; and
- Selectable Output Control (SOC), discussed below, without which content providers will not permit VOD day-and-date release with theatrical release windows.

As was explained in the DSTAC WG 4 report, MVPDs employ a variety of approaches to enabling VOD, and new techniques continue to be developed. For example, certain forms of transactional VOD may require the subscriber to interact with VOD servers to execute the purchase, to enter a PIN, and to have the ability to manage their PIN. In addition, for some forms of VOD, the content provider requires fast forward to be disabled during commercial breaks. The lack of a trusted application execution environment could permit hackers to compromise these VOD transactions and requirements. VOD variants such as Start Over and Look Back similarly require feature-specific forms of interaction and network signaling that are fundamentally different from those used for other forms of transactional VOD: rather than navigating directly to a specific VOD title, Start Over and Look Back require the subscriber first

[12] DSTAC Final Report at 189 (DSTAC WG4 at 54): "This use case also covers the multiple forms of on-demand content consumption, examples include:

- Transactional VoD (rental transaction, including purchase screen)
- Subscription VoD (premium subscription content, authorization only)
- Free VoD (non-premium content, no authorization or purchase screen)
- Electronic Sell Through (EST, purchase screen on first viewing only, authorization only on subsequent viewing)
- Start Over™ (similar to subscription VoD, but contextual)
- Look Back™ (similar to subscription VoD)
- Purchase PIN (PIN setting and resetting both on TV and through customer support, PIN enabling and disabling, PIN entry)
- Device meets trick play requirements, e.g. disables FF with OD content (typically during advertisements), per content provider condition, disable skip (e.g., 30-second skip) for full assets or intra-asset."

to navigate to a linear channel that supports these features; only then is the option presented within the UI to initiate an on-demand stream for the appropriate content.

Additionally, MVPDs routinely evolve their VOD technologies. MVPDs regularly collaborate with programming suppliers to develop and launch new VOD-based offerings that are (a) enabled by specific technological tools, and (b) enforced through contractual terms. As potential examples, future VOD-based features may require the MVPD to support chaptering; limit the speed at which the end user fast forwards through a VOD asset; or restrict the ability to rewind. And in response to marketplace forces (e.g., new differentiating features launched by competitors), MVPDs are constantly adding new features, expanding libraries, introducing new pricing models, and changing bundles that package subscription VOD in new ways, distinct from transactional VOD. Having to coordinate with a wide variety of third parties every time this system is touched – even in those instances where additional standards-body is not required to enable the new features – would be an immense commercial hindrance to any MVPD. It also risks exposure of sensitive business plans to competitors prior to launch.

SOC. Selectable output control, a requirement for day-and-date with theatrical release (availability at home at the same date as in the theater), is another feature that requires user interaction, and thus a trusted application execution environment, to enable the VOD transaction. For SOC to function, the connection between the secure device and the external display must be secured through a protected digital connector, typically HDMI/HDCP, and this prerequisite must be communicated to the subscriber to ensure that they do not purchase an asset that their equipment cannot support. SOC also requires new content metadata signaling in order to communicate which content is available under selectable output control.

Bandwidth Management. The FCC's proposed architecture would remove MVPDs' ability to manage critical network bandwidth. For example, the number of concurrent video streams a device, household, or portion of the network (for example, a service group or neighborhood) can support is dependent on the available bandwidth, the number of streams requested, and the bit-rate per video stream. The ability to manage and control for these factors requires two-way communication between the app on the device and the network in real-time. In the absence of a trusted application execution environment, that interactivity cannot take place.

Different MVPDs have different bandwidth limitations – and utilize different bandwidth-management techniques – based upon their network architecture. For example:

- DSL-based networks have limitations on the bandwidth available to each home. Specifically, the available bandwidth into a home is limited and shared between broadband Internet and TV services. Typical bandwidth into a home on an ADSL connection is around 25Mbps. If each video is 4 Mbps and the broadband Internet service is 10 Mbps, then the home can only support 3 unique streams before exceeding available capacity. AT&T U-Verse makes use of proprietary IP protocols for the purpose of stream management. These proprietary IP protocols also provide Instant Channel Change, a feature that minimizes channel change latency. The client portion of this proprietary protocol is implemented by the app running on the IP set-top. By denying MVPDs access to a trusted application

execution environment, the NPRM as a practical matter would eliminate these features.

- Cable networks have limitations on the bandwidth available to a service group.[13] As described in the DSTAC Working Group 4 Report,[14] however, cable systems can use Switched Digital Video ("SDV") within QAM networks to broadcast to a service group only those channels that are being viewed at a given time. SDV requires close coordination between the cable set-tops and the network, as well as user interaction (such as a response to the network message to "please press a button on the remote if you are still viewing this channel" after a defined period of inactivity), to ensure that only those channels currently being watched are actually transmitted into the corresponding service group. All of these interactions, both machine-to-machine and consumer-to-machine, require the ability to run an app on the retail device to properly implement the necessary protocols, display appropriate notifications, and capture subscriber input. By denying MVPDs the ability to run application code on the retail device, the NPRM would require MVPDs to run the code for SDV in an external home device, as was done with the Tuning Adapter for CableCARD devices.[15] Similarly, the critical role that executed code plays in SDV implementations would be required for *any* multicast protocol, proprietary or standard.

User Authentication. In order for a device to be associated with a subscriber's account so that the device can enforce the entitlements for that subscriber, the user must be authenticated on that specific device. In order for a subscriber to be securely authenticated, they must provide credentials, typically username and password, via a secure means. In the case of MVPD-provided equipment, (1) the device is associated with the subscriber's account when it is installed in the home, and (2) the device itself includes credentials that identify it and are known

[13] DSL networks also have service group limitations, but typically the bandwidth limitations to the home are the primary constraint.

[14] DSTAC Final Report at 185 (DSTAC WG 4 at 50): "Switched Digital Video (SDV) allows an MVPD to make efficient use of bandwidth by only broadcasting those channels that are currently being watched within a given area, e.g., a node, or neighborhood. This allows the MVDP to use the reclaimed bandwidth for other services, including higher data speeds. The network looks for tell-tale signs of viewer inactivity, asks the viewer if he or she is still watching, and recovers the channel if there is no response. The exact SDV techniques vary by vendor, but they rely upon SDV client software in the customer device or a tuning adapter as well as two way communication. For SDV to work within retail devices without the requirement of an external MVPD-specific tuning adapter, all current implementations would need to be ported and a predictable software client would need to be present in the retail device. These solutions would need to be tested for operability and for functional tuning performance across MVPDs, and room would need to be left for the implementations to continue to evolve and improve. If there is no client to communicate viewing status upstream, there is no recovery of bandwidth, and SDV would fail in its essential purpose of opening bandwidth for more channels, more high-definition, faster broadband and more advanced services."

[15] If the client does not implement the operator-specific SDV protocols correctly, that could not only impact the client itself (that is, the device many be unable to tune the switched channel), it also could negatively impact overall bandwidth usage on the network: where a client fails to signal upstream that it is no longer viewing a channel, the network may mistakenly continue to transmit that channel over the network, even when no clients are actually consuming it.

by the MVPD (this is the security data referenced in the DSTAC Working Group 2 Report).[16] The subscriber may also establish a PIN for parental control or purchase authorization for the purpose of further authentication credentials. The MVPD app on the set-top provides the PIN entry user interface and enforces the PIN authentication to enable content access or purchases.

Secure user and device authentication must also occur in the case of a retail device to enable a device to be associated with a subscriber's account. Without this secure authentication it is possible for either the device or the user to be falsified, thus enabling theft of service. The MVPD app performs the secure user authentication and can access the device credentials to establish the association. The NPRM proposal would prevent MVPDs from authenticating their subscribers (as well as subscriber-owned devices) by removing the possibility of running an MVPD app on the retail device.

While the NPRM does indicate that retail devices would undergo some form of certification,[17] it does not propose that a retail device must include a unique certificate attesting to the validity and identity of the device, nor does it propose that this certificate be electronically produced for purposes of identification and authentication by the MVPD. As discussed in greater detail below in Section V, the ability to identify and inventory connecting devices/apps is the first core principle ("*Identify*") under the NIST cybersecurity framework, but the FCC's proposed architecture – by denying MVPDs the ability to execute code within the third-party device or app – ignores this critical component of overall security. Without the ability to identify the device or app, it cannot be associated with a subscriber's account and it cannot have its service individually terminated if the device or app is determined to noncompliant with its certification.

II. THE FCC PROPOSAL DOES NOT SUPPORT EXISTING REGULATORY REQUIREMENTS

MVPD services carry a range of statutory and regulatory consumer-protection and other obligations. These include:

- Protecting the privacy of customers' viewing histories and other personally identifiable information;
- Respecting children's advertising limits by not (1) adding additional advertising to a program, thereby exceeding regulatory time limits (or adding ads that render that

[16] DSTAC Final Report at 52 (DSTAC WG2 at 25).

[17] NPRM at ¶ 72: "We also believe that a device testing and certification process is important to protect MVPDs' networks from physical or electronic harm and the potential for theft of service from devices that attach directly to the networks."

program a 'program-length commercial');[18] or (2) adding impermissible web links, either via overlays or additional advertisements;[19]

- Providing Emergency Alert System ("EAS") warnings;

- Enabling accessibility for persons with disabilities: closed captions, captioning complaint processes, talking guides, video description, audio representations of video emergency information (such as weather alerts), and customer support for these features; and

- Respecting channel assignments required by retransmission consent or must-carry requirements, such as carrying a local broadcast channel "on channel" (on the same channel that it advertises as it off-air assignment) or some other mutually agreed-upon channel.

MVPDs have pursued an apps-based approach to comply with these requirements. An apps-based approach, as described elsewhere in this White Paper, provides MVPDs with substantial flexibility to manage how features and content are displayed within the User Interface (UI), introduce new features and updates, make back-end changes to their networks, and respond to security events. Apps are written to specific retail platforms, and those platforms provide trusted application execution environments. Apps take into account the unique characteristics of the specific platform and execution environment of the device, and the network and business requirements of the MVPD. Apps also play a critical role in the end-to-end trust infrastructure MVPDs rely upon to ensure the sanctity of the content that they license and distribute.

The NPRM does not propose to place any similar regulatory demands directly upon third parties. Instead, the proposal would require MVPDs themselves to police third-party retail devices and third-party apps. Presenting services and monitoring device behavior both require the interactivity and access to a trusted application execution environment that underlie the apps-based approach. Because the proposal would prohibit MVPDs from using an apps-based approach, however, they would have no ability to ensure that third-party devices/apps present their services – or even to monitor what they are doing. As a consequence, the FCC proposal fails to provide technical support for these regulatory requirements.

A. Privacy

Federal statutes provide cable and satellite subscribers clear privacy protections.[20] The proposal, however, provides MVPDs with no technical means (such as the ability to run software

[18] FCC Rule 76.225(a) states that "[n]o cable operator shall air more than 10.5 minutes of commercial matter per hour during children's programming on weekends, or more than 12 minutes of commercial matter per hour on weekdays." 47 CFR § 76.225(a).

[19] FCC Rule 76.225(b)-(d) defines how certain commercial web links can count towards the time limits for advertisements during children's programming. 47 CFR § 76.225(b)-(d).

[20] Congress provided specific privacy protections and rights for cable and satellite subscribers in Sections 631 (cable) and 338 (satellite) of the Communications Act. 47 USC §§ 551, 338. Specifically, cable and satellite companies: must protect the privacy of their video customers' individual viewing history and other personally

controls within a trusted application execution environment within the third-party device or app) to secure statutorily protected customer-viewing data from disclosure to third parties. The NPRM also fails to propose any rules restricting a third-party's ability to mine viewer data – and affirmatively declines to propose any rules prohibiting additional, overlaid, or replacement advertising. Instead, it would require developers to certify compliance with the privacy provisions in the Communications Act that apply to MVPDs.[21] Today, MVPDs utilize an apps-based approach to ensure compliance with these obligations. An MVPD-developed app, running in a trusted application execution environment on a retail device, ensures an end-to-end trust infrastructure that can protect consumer's viewing information. The NPRM denies MVPDs the interactivity and ability to run code required to maintain that end-to-end trust infrastructure. As a result, MVPDs would have no ability to assure that these obligations are satisfied on third-party devices and apps. As just one example, the proposed architecture would expose sensitive viewing data, such as whether the customer subscribes to mature content.

Specifically, even if third-party Navigation Devices (and their developers) somehow would be bound to the exact privacy commitments as those made by MVPDs, MPVDs would have no ability to monitor what third-party Navigation Devices actually are doing with customer data. For example, are they:

- Protecting consumer data from disclosure to third parties?
- Misusing that data themselves?
- Accessing the data for purposes other than operating retail navigation devices?
- Respecting all consumer choices and options?
- Auditing what third parties are doing with collected data?

Moreover, MVPDs, particularly smaller MVPDs, would not be able to keep track of which devices were accessing their services, much less whether every single one of those devices was complying with respect to all programming and data, at all times, for all customers. The NPRM suggests that if the MVPD somehow were to detect a violation, it would have to terminate service to the device, but there is no clear means for how an MVPD could selectively terminate a specific device's access to the Information Flows. As discussed in Section I, there is no

---

identifiable information; may not unilaterally sell their customers' personally identifiable viewing records; must honor their consumers' opt-out and consent rights with respect to limiting disclosures (for example, a cable operator must offer opt-out rights from mailing lists and may offer a variety of opt-outs from certain forms of advertising); must allow consumers to access and correct personally identifiable information; and must first provide consumers with notice and an opportunity to contest before honoring a law enforcement or governmental request for personally identifiable viewing records – and the government must obtain a court order after presenting clear and convincing evidence that the subscriber is engaged in criminal activity. Cable and satellite customers are able to enforce these rights via a private right of action in federal court and the express availability of statutory damages, and cable and satellite companies must provide consumers with a clear and conspicuous explanation of these enforcement rights.

[21] NPRM at ¶ 73. The NPRM does not explain how a third party could certify to the availability of a private right of action in federal court against it, or restrict law enforcement or governmental access as required in the privacy provisions in the Communications Act that apply to MVPDs.

technical means (e.g., a trusted application execution environment to run MVPD code) by which to authenticate either the subscriber or the device to uniquely identify which device associated with which subscriber account should have its access terminated.

B. Advertising Restrictions

The NPRM does not propose rules restricting the advertising practices of third-party developers of Navigation Devices.[22] Instead, the NPRM concludes that MVPDs should be responsible for one specific advertising-related concern: monitoring and enforcing children's advertising requirements on third-party Navigation Devices. As one example, certain links to commercial web content are not allowed under FCC Rules.[23] But in today's marketplace, MVPDs use apps on retail devices to insure that advertising restrictions are enforced. The MVPD app provides the presentation function on the retail device that interacts with the MVPD network functions controlling the insertion and placement of advertising. Absent (a) the ability to execute code within a third-party device or app, and (b) two-way interactivity between the app and related network resources – both of which are not provided for by the proposal – it would not be possible for the MVPD to exercise any control over the placement of advertising or marketing content.

C. EAS

The NPRM would require (1) developers of Navigation Devices to certify that they will pass through EAS messages, and (2) MVPDs to make the three Information Flows available *only* to certifying Navigation Devices.[24] There are a number of problems with this approach. First, it appears that MVPDs would remain subject to the requirement that EAS messages be passed through to customers,[25] even though they would have no technical ability to ensure that that occurs. Second, MVPDs employ a variety of protocols to deliver EAS messages, an issue that the NPRM does not address. As a result, MVPDs either would have to reach consensus on a single protocol (which may not be technically feasible for all MVPDs) or support multiple and duplicative protocols. Third, the proposal provides no technical means by which MVPDs could monitor whether a certifying Navigation Device is actually passing through and rendering EAS messages. MVPDs today use apps running on the end-user device to render EAS messages, but the NPRM precludes a trusted application execution environment in which to run MVPD code. Fourth, as with privacy protections, it does not provide MVPDs with the technical tools to deny a non-compliant Navigation Device access to the three Information Flows. As a consequence, MVPDs would be denied the technical ability to comply with these existing and additional regulatory burdens.

---

[22] NPRM at ¶ 80.

[23] FCC Rule 76.225(b)-(d) defines how certain commercial web links can count towards the time limits for advertisements during children's programming. 47 CFR § 76.225(b)-(d).

[24] NPRM at ¶ 73. The NPRM defines "Certificate" as a document, rather than any form of digital certificate.

[25] FCC Rule 11.11(a) Table 4 defines the obligations of digital cable operators with respect to the provision of EAS messages to subscribers. 47 CFR § 11.11(a).

D. Accessibility

After adoption of the Twenty-First Century Communications and Video Accessibility Act of 2010,[26] the FCC has taken a number of steps to ensure that all Americans have access to video programming. MVPDs today utilize interactivity and apps running on the end-user device to deliver these features. Given the technical restrictions placed upon MVPDs by the proposal, however, the NPRM would create gaps in the accessibility protections in third-party devices and apps.

1. Closed Captioning

The NPRM incorporates closed-captioning data into its definition of Content Delivery Data, proposing that MVPDs pass through "any information necessary to make the Navigable Service accessible to persons with disabilities under our rules."[27] However, the NPRM denies MVPDs the technical means to monitor how closed captions are treated by the third-party UI. For example, are captions being presented as required by the rules?[28] Are customers able to customize the size, font, location, color, etc. of those captions?[29] Absent such monitoring ability, MVPDs cannot know whether third-party Navigation Devices are presenting captions as required.

The NPRM also anticipates that third-party developers will competitively differentiate their products by *interlacing* MVPD and over-the-top ("OTT") content within a single UI or guide.[30] However, unless an online program has been captioned for viewing on television, there is no obligation to provide it with captions. As a result, consumers using third-party Navigation Devices to access their captioned MVPD programming will confront intermixed OTT programming that is not captioned.

2. Contact Information

Pursuant to the FCC's captioning responsibility rules, captioning-related complaints are provided directly to the MVPD. MVPDs (and broadcasters) must provide detailed information regarding the handling of closed-captioning issues, including the names and contact information for specific personnel responsible for handling captioning-related concerns. They must provide this information to customers on billing statements and websites, and must include contact information in an FCC database. Under the proposal, device manufacturers and makers of apps would have no similar obligation to help customers with captioning-related issues, despite the fact that the problem may be on their retail device, and not the MVPD service. But while

---

[26] Twenty-First Century Communications and Video Accessibility Act of 2010, Pub. L. No. 111-260.

[27] NPRM at ¶ 40.

[28] FCC Rule 79.102 defines how captions must be displayed. 47 CFR § 79.102.

[29] FCC Rule 79.103 specifies the customization options for captions that must be made available to consumers. 47 CFR § 79.103.

[30] For example, the NPRM claims that "MVPDs and unaffiliated vendors must be able to differentiate themselves in order to effectively compete based on the user interface and complementary features they offer users (e.g., integrated search across MVPD content and over-the-top content…." NPRM at ¶ 27.

accessibility complaints would be directed to the MVPD, MVPDs would be unable to help customers solve accessibility problems with their third-party devices, and under the proposal, device manufacturers and makers of apps would have no obligation to do so.

3. Talking Guide

The "talking guide" rule requires larger MVPDs to make their user interfaces audibly accessible by the end of 2016.[31] While the NPRM's proposed definition of Content Delivery Data includes "any information necessary to make the Navigable Service accessible to persons with disabilities under our rules,"[32] the proposal excludes such features as a "talking guide" from the Information Flows made available to third-party Navigation Devices. Because the proposal would deny MVPDs access to a trusted application execution environment within third-party devices or apps, consumers using such devices may not be able to access, for example, Comcast's Voice Guidance on the X1 Entertainment Operating System, which won an FCC Chairman's Award for Advancement in Accessibility (Chairman's AAA) from Chairman Wheeler in 2015.[33]

4. Video Description

MVPDs and apparatus manufacturers have certain obligations to pass through video description, which is contained within a secondary audio stream.[34] Apps provided by non-MVPDs, by contrast, have no obligation to support a secondary audio stream. Thus, consumers might not be able to *access* video descriptions even if the descriptions are passed through.

5. Emergency Information ("EI")

Beginning in 2017, cable operators and other MVPDs must ensure that any app or plug-in that *they* provide to consumers to access linear programming over their networks is capable of passing through in a secondary audio stream the aural representation of any EI presented visually (such as weather alerts). As described above, however, apps provided by non-MVPDs have no obligation to make additional audio streams available to end users.

E. Must Carry Channel Location

There is a difference between "channel location" in the context of where a channel physically is carried on the network (for example, on what frequency), and where that channel

---

[31] FCC Rule 79.108. 47 CFR § 79.108.

[32] NPRM at ¶ 40.

[33] "Innovators Honored at 2015 Chairman's Awards for Advancement in Accessibility," https://www.fcc.gov/general/innovators-honored-2015-chairmans-awards-advancement-accessibility: "Voice Guidance on the X1 Entertainment Operating System 'speaks' what's on the television screen to allow viewers who are blind or visually impaired to navigate user interfaces and video program information from cable set top boxes' on-screen menus. With this tool, viewers without sight can easily find, select, record and watch anything on their channel lineup. The Talking Guide also allows customers who are blind or visually impaired to independently access settings to enable or disable the Secondary Audio Program to access content with video description."

[34] FCC Rule 79.106, 47 CFR § 79.106.

visually appears in the programming guide or UI. MVPDs today use a variety of techniques for the physical delivery of individual linear video streams. For example, digital cable operators using QAM combine streams together into multiplexes that are delivered within 6 MHz channels on specific frequencies, while IP-based systems associate content sources with IP addresses. In order to meet obligations under "must carry" regulations and "retransmission consent" agreements with local broadcast signals (and, more broadly, to manage how they present linear streams to end users), MVPDs have developed various technical means by which specific linear streams are presented on specific channel numbers (and/or placed in specific locations within MVPDs' programming guides), regardless of where they might physically reside on the network. Today MVPDs accomplish this abstraction within their guides or apps.

The NPRM prescribes limited and fixed Information Flows through which MVPDs would send out information regarding channel assignments. But it fails to provide any tools that MVPDs might rely upon to ensure that channel location is respected. Neither link-layer security (such as DTCP-IP) nor DRMs on their own can create or enforce channel assignments. Security systems that have been decoupled from the app or guide have no ability to enforce the requirement that a given linear stream be presented in a specific location within the third-party guide or UI. Because the NPRM would prohibit MVPDs from running code within the third-party device or app, it would not secure channel location.

F. MVPDS' Ability to Police Third-Party Navigation Device Compliance with Regulatory Requirements

Rather than placing demands directly upon third-party Navigation Devices (or the third parties themselves), the proposal instead would require MVPDs to police third-party compliance with some of the regulatory obligations described above. Specifically, the NPRM states that MVPDs would be required to enforce third-party compliance by denying the Information Flows to Navigation Devices that (a) do not certify to voluntary compliance with a subset of the requirements discussed above, and (b) do not respect channel-assignment information delivered over the fixed interfaces (in this case, not even self-certification is required). There are serious problems with this aspect of the proposal.

First, third parties would not be required to certify to all of the regulatory requirements that apply to MVPD-provided set-top boxes (and/or MVPDs themselves) – self-certifications need only address certain advertising restrictions relating to children's television, privacy and EAS. This not only would lead to compliance gaps, it also would create customer confusion and customer-service issues directed at the MVPD (the third party manufacturer or app developer has no obligation to provide contact information or support).

Second, the proposal would mandate that MVPDs provide the Information Flows in an "open" manner. As a result, it is not clear how the FCC expects an MVPD to technically constrain which models/classes of devices can and cannot access those Information Flows.[35]

[35] While the proposal would allow MVPDs to use certain DRMs to protect the Content Delivery Interface, it would prohibit them from using the industry standard, holistic apps-based approach to security. As discussed in Section II, using a DRM solely to encrypt raw video streams would fail to protect all other aspects of MVPDs' services, and

Third, MVPDs would have no technical ability to detect whether the third party actually is doing what information flows instructed or what it certified:

- Is the third-party Navigation Device respecting channel assignments as required by content license and/or regulation?

- Is it respecting children's advertising limits by not (1) adding additional advertising to a program, thereby exceeding regulatory time limits; or (2) adding impermissible web links, either via overlays or additional advertisements?

- Is it complying with the privacy provisions in the Communications Act? For example, is it collecting, using, storing, and destroying data consistent with those obligations? Does it allow customers to correct personally identifiable information?

- Is it passing through EAS alerts?

MVPDs today execute code on the end-user device in order to comply with these requirements. The proposal, by contrast, would deny them the ability to do so within third-party devices and apps, which means that they would not be able to perform any auditing functions.

Fourth, the NPRM concludes that MVPDs must make the Information Flows available to not just third-party manufacturers of navigation devices, but to software developers, as well. As a result, the potential number of third-party devices and apps accessing the Information Flows likely would make it operationally infeasible for MVPDs, especially smaller MVPDs, to monitor the compliance levels of every class/model of device or app. As a point of reference, as of July 2015 consumers are able to choose from 1.6 million Android apps and 1.5 million iOS apps.[36]

Fifth, by failing to provide for secure user authentication, the NPRM provides no technical means to authenticate either the subscriber or the device to uniquely identify which device associated with which subscriber account should have its access terminated.

III. THE FCC PROPOSAL DOES NOT SUPPORT MVPDS' ABILITY TO SATISFY THEIR CONTRACTUAL COMMITMENTS TO PROGRAMMERS

As explained above, MVPDs today rely upon trusted application execution environments on the end-user devices they serve to manage how their services are presented: information flows of metadata and content cannot create and display a UI on their own. Currently MVPDs ensure that an adequate execution environment is available in two primary ways: (1) working with unaffiliated vendors to define product requirements (processing, memory, storage,

---

likewise would be unable to restrict access to non-certifying devices. Use of DTCP link protection, as proposed by the NPRM, would only provide for the "brute-force" revocation of a device's certificate. And under the DTCP License Agreement, a certificate can only be revoked if the certificate/key has been cloned, the certificate/key has been lost or stolen, or by order of the National Security Agency ("NSA") or court. To date, we believe no DTCP certificates have been revoked in its 17-year existence.

[36] Statista Inc., "Number of apps available in leading app stores as of July 2015," http://www.statista.com/statistics/276623/number-of-apps-available-in-leading-app-stores.

interfaces, etc.) for leased set-top boxes, and (2) developing apps that can run within the trusted application execution environments on retail platforms that provide the technical capabilities required for MPVDs to deliver their services as intended. The previous Section II described how the proposal's failure to mandate a trusted application execution environment on third-party Navigation Devices would threaten MVPDs' ability to comply with both existing regulatory obligations and new requirements proposed by the NPRM. This Section III explains how this same failure to provide MVPDs with access to a trusted application execution on third-party Navigation Devices would deny them the technical capability to satisfy their contractual obligations to their programming suppliers.

MVPDs negotiate with content creators to obtain the right to distribute programming via linear channels, VOD assets, and other formats. Those negotiated rights typically come with restrictions that define and constrain how the content may and may not be presented to subscribers. Some of the terms that programmers demand are related to protection of their brand, such as conditions relating to channel line-up and channel neighborhoods, advertising restrictions, and search results. Other contractual terms relate to how programmers choose to segment the market with different licenses for different distribution channels, different localization restrictions, and different usage rights, such as start-over, look-back, types of VOD transactions, electronic sell through, etc. MVPDs today use existing execution environments on both leased and retail devices to run their apps. These apps allow them to manage the service to ensure that any contractually defined restrictions on the use of licensed content are respected as well as to present their own distinctive look and feel.

The proposal's failure to provide MVPDs with access to a trusted application execution environment or the opportunity to deliver and protect service by using an MVPD app on third-party Navigation Devices would deny them the technical tools needed to manage how that content is presented, how the service is rendered, and how it is presented within the MVPD's UI, which in turn would render them unable to satisfy the contractual protections programming suppliers demand. Under the proposal MVPDs would have no technical ability to comply with such common licensing terms as:

- Channel-Positioning Requirements: Content licenses often dictate the specific channel number on which a linear stream may appear within the guide; impose restrictions regarding what types of programming may appear adjacent to the licensed stream (e.g., terms that prohibit the presentation of licensed content alongside adult (TV-MA) or pirated content); specify in which neighborhood the licensed stream may reside; or otherwise limit where and how the MVPD may present the licensed stream.

- Location-Based Restrictions: Content creators may choose to limit *where* a specific asset or linear stream may be viewed (for example, a license may specify in-home distribution only or may grant out-of-home mobile rights to only one provider).

- Time-Based Restrictions ("Windowing"): Programming agreements often define *when* a specific asset may be viewed.

- Advertising-Related Restrictions: Programmers may limit the number and type(s) of advertising that can be associated with their programming.

- Search-Related Requirements: Programmers may limit how and where their assets may appear within search results. For example, a content agreement may prohibit a licensed asset from appearing alongside adult or pirated content in displayed search results.

- Format-Related Requirements: Programmers may require that their content be shown with a specific video resolution and aspect ratio. There is no requirement for third-party Navigation Devices to maintain these specifications, however. In fact, the retail device could show a programmer's content at a lower resolution, or in a different aspect ratio, than that which the MVPD is required to deliver by contract, or at a higher resolution than the programmer allows on a certain device.

- Output-Based Restrictions: Programmers may restrict their most-valuable content (for example, new-release movies in 4K format) to specifically defined interfaces. Today SOC is the most common example of such an output-based restriction, but licensing agreements in the future could specify new output protections such as HDCP 2.2+ on DisplayPort.

While the trust infrastructures used by MVPDs today, described above, allow them to comply with these obligations through the integration of licenses, apps, software and hardware platforms, and other technical means, by failing to make a trusted application execution environment available to MVPDs the proposal would open the door for potential abuses by third parties. These could include:

- Failure to respect MVPD-provided channel-placement instructions: Content security (whether a CAS, a DRM, or link-layer security such as DTCP-IP) on its own cannot exert control over the UI – only an app can guarantee compliance with channel-placement requirements. Further, the proposal would bar business relationships between MVPDs and developers of third-party Navigation Devices that could enforce channel-placement requirements through contract.[37] The NPRM would permit MVPDs to provide channel-placement instructions to third-party Navigation Devices and to deny the Information Flows to those that do not abide by those instructions, but it denies them any practical means to monitor or enforce third-party compliance.[38]

- The overlay, replacement, and/or addition of impermissible advertising: Although content agreements frequently proscribe the types of advertising that may be associated with the licensed content, the NPRM expressly declines to propose rules that would prevent third-party Navigation Devices from adding, replacing, or overlaying advertisements that are inconsistent with the express terms of that license.

[37] NPRM at ¶ 24.

[38] The operational challenges associated with attempts to monitor the compliance of a potentially unknown and unbounded number of third-party Navigation Devices (that is, both devices and apps) would make it infeasible for MVPDs, and in particular smaller MVPDs, to ensure that channel-placement requirements are respected in all cases, at all times, by all models and versions of third-party Navigation Devices.

- Commercially motivated interference with search results: The proposal would place no limitations on the ability of third-party Navigation Devices to monetize and distort search results. This could lead to search results that violate explicit licensing terms, such as:
    - Restrictions on paid priority (that is, the sale of the top search result to the highest bidder);
    - Impermissible fees imposed upon content providers to maintain (or raise) their search-result location; and
    - Prohibitions against the commingling of legitimate with unlicensed/pirated material (or adult content) within search results.

IV. THE FCC PROPOSAL IMPEDES INNOVATION AND TECHNOLOGICAL PROGRESS IN MVPD NETWORKS

The NPRM establishes objectives for rules that do "not impede innovation" and that "should not prescribe a particular solution that may impede the MVPD industry's technological progress."[39] As discussed below, innovation is already extensive within the MVPD industry. The FCC proposal would constrain the technological environment that fosters this current climate of innovation and would impede the ability of MVPDs to innovate in the future. These same constraining factors would impede the MVPD industry's ability to take further advantage of technological advancements that have just begun to deliver benefits.

A. Innovation in MVPD Networks and Services Today

As was detailed in the DSTAC Report,[40] competition among MVPDs has led to the use of a wide variety of technologies and network architectures for delivery of Pay TV service. While some basic distinctions between distribution architectures are well known, such as the difference between cable QAM, satellite, and IPTV, the DSTAC Report documented in substantial detail the various ways in which MVPDs' architectures differ.

These fundamental differences in MVPDs' architectures arise from individual network-design choices involving such technologies as:

- CAS;
- Controllers;
- The out-of-band ("OOB") communications channels used for command and control of the set-top box;
- Network transports;

[39] NPRM at ¶¶ 30, 32.

[40] DSTAC Final Report at 30-32 (DSTAC WG2 at 3-5).

- Signal modulation (e.g. QAM, QPSK);
- Video codecs;
- Core ciphers;
- Advanced system information such as network configuration and session management;
- Billing systems;
- The operating system, processor instruction set, interactive services; and
- Apps necessary for presentation of services.

Thus, the NPRM's claim that "most MVPDs have coalesced around a few standards and specifications for delivery of the video content itself," and subsequent reference to MPEG-2, MPEG-4 AVC and MPEG HEVC,[41] encoding methods severely misstates the variety and pace of change in MVPD technology, documented in detail in the DSTAC Report, which includes but goes far beyond encoding methods. .

The table below provides a snapshot of the differences that exist between transmission and CAS technologies currently deployed across and within the various categories of MVPDs: [42]

MVPD	CAS	Core Cipher	Transport	Control Channel	Video Codec
Cable	• DigiCipher 2 • MediaCipher • PowerKey • NDS VideoGuard • Conax • Nagravision • DTA • OMS • BBT • Verimatrix VCAS for Broadcast-Hybrid	• DES-CBC • DES-CBC • DES-ECB • CSA • CSA • CSA • DES-CBC/ECB • CSA/DES/AES • AES • AES/DES/CSA	• QAM/MPEG-2 TS • QAM/MPEG-2 TS • QAM/MPEG-2 TS • QAM/MPEG-2 TS • QAM/MPEG-2 TS • QAM/MPEG-2 TS • QAM/MPEG-2 TS • QAM/MPEG-2 TS • QAM/MPEG-2 TS • QAM/IP/MPEG-2 TS	• SCTE-55-1 • SCTE-55-1/DOCSIS • SCTE-55-2/DOCSIS • Generic IP • Generic IP • SCTE-55-2/DOCSIS • In-Band • DOCSIS • Generic IP • Generic IP	• MPEG-2/AVC • MPEG-2/AVC • MPEG-2/AVC • MPEG-2/AVC • MPEG-2/AVC • MPEG-2/AVC • MPEG-2/AVC • MPEG-2/AVC • MPEG-2/AVC • MPEG-2, MPEG-4/H.264
Satellite	• NDS VideoGuard • Nagravision • Terrestrial free-to-air	• DES/AES • CSA/DES/AES • N/A	• QPSK/DSS TS, DVB-S2/MPEG-2 TS • QPSK, 8-PSK Turbo/MPEG-2 TS • 8-VSB/MPEG-2 TS	• In-Band • In-Band • N/A	• MPEG-2/AVC • MPEG-2/AVC • MPEG-2
Telco	• Mediaroom DRM • MediaCipher/PowerKey • Verimatrix VCAS for IPTV	• AES • CSA • AES/DES/CSA	• Multicast/Unicast-IP/VDSL/FTTP • QAM/MPEG-2 TS & IP/BPON or IP/GPON • IP Multicast MPEG-2 TS	• IP/VDSL/FTTP • SCTE-55-1/SCTE-55-2 • Generic IP	• AVC • MPEG-2/AVC • MPEG-2, MPEG-4/H.264
Google Fiber TV	• Widevine	• AES	• IP/GPON	• IP/GPON	• AVC

To highlight some of the biggest technological differences that exist:

- In video encoding technology, while many older devices tied to MPEG-2 Transport in hardware are also tied to MPEG-2 video format, *different variants* of MPEG-2, MPEG-4 AVC and MPEG HEVC are used for video compression across MVPDs.

[41] NPRM at ¶ 4 and note 9.

[42] DSTAC Final Report at 32 (DSTAC WG2 at 5), Table 1.

There are variations and continued change in transport structure for linear and for Video-on-Demand (VOD) content.

- Just as the original DigiCipher 2 moved from progressive refresh (I-macro-blocks instead of I-frames) to MPEG-2, now video codecs are evolving from MPEG-2 to AVC to HEVC, as well as open source codecs such as VP-8 and VP-9.

- Audio codecs are evolving from MPEG Audio to AC-3 to MP3 to AACS to ATMOS, but any or all may still be in use.

- Satellite moved from proprietary transport protocol (DSS) to MPEG-2 then to MPEG-4.

- AT&T created U-Verse and Verizon created a hybrid QAM/IP service in FiOS.[43]

- Transport protocols for IP video have evolved from RTSP/UDP to various forms of Adaptive Bit Rate (ABR) protocols (HLS, HDS, DASH, etc.), which remain in debate and in development.

- The same evolution has occurred with broadband access network technology (DOCSIS 1.0 to 1.1 to 2.0 to 3.0 to 3.1 for cable networks; ISDN to DSL to ADSL to VDSL copper-based networks; BPON to GPON for fiber-optic networks; or IPv4 to IPv6 for IP transmissions).

- Ultra High Definition (UHD) is under similar evolution, with a diversity of approaches and with different studios currently in different places.

More broadly, the pace of technological change within the video industry has accelerated since the early days of MPEG. Changes in MPEG application and feature updates occurred over the course of years. IP application and feature updates, by contrast, are occurring multiple times a month. For IP delivered content to consumer-owned devices, there is a cross-industry effort to standardize streaming formats using W3C HTML5 Encrypted Media Extensions (EME) standards and MPEG-DASH, but the efforts are not complete.[44] The recently launched Web Application Video Ecosystem ("WAVE") (initially launched as the Global Internet Video Ecosystem) includes leaders in content, infrastructure, technology, and TV displays to promote the use of HTML5-based solutions on TVs, phones, tablets, media players, gaming systems, laptops.[45]

---

[43] DSTAC Final Report at 30-31, 38 (DSTAC WG2 at 3-4, 11).

[44] DSTAC Final Report at 38 (DSTAC WG2 at 11).

[45] Troy Dreir, "CES '16: The GIVE Project Aims to Push HTML5 Video Forward," Streaming Media, January 7, 2016, http://www.streamingmedia.com/Articles/Editorial/Featured-Articles/CES-16-The-GIVE-Project-Aims-to-Push-HTML5-Video-Forward-108444.aspx. GIVE, now known as the WAVE Project, is spearheaded by the CTA. The steering committee includes Adobe, Akamai, LG, Samsung, Sky-UK, Sony, Starz, and WWE. The panel announcing GIVE included representatives of Adobe, Akamai, Comcast, Sony, Microsoft, MLB Advanced Media, Samsung, and Starz. Additional information about the WAVE project can be found at https://standards.cta.tech/kwspub/give.

The diversity and ability to change without awaiting industry agreement on a standard technology or implementation has enabled MVPDs to compete and launch innovative solutions that leverage their unique network capabilities and infrastructure. Some examples:

- AT&T's Pay TV network began as native IP over DSL. AT&T was able to leverage its IP network assets to offer uniquely competitive features, such as a virtually unlimited channel selection enabled using a proprietary IP multicast protocol, despite the relatively limited bandwidth of DSL networks. It also was able to offer Instant Channel Change as a competitive advantage over cable and satellite through these same IP multicast protocols. And by leveraging its IP network in the home, AT&T was able to offer multi-room DVR capabilities before its competitors.

- Cablevision was able to leverage its unique network resources to pioneer Remote Storage DVR, today commonly known as cloud DVR. Remote Storage-DVR eliminated the need for hard-disk storage in the home and enabled multi-room DVR with the added capability to record as many channels concurrently as desired, obtaining an advantage over its competitors whose concurrent recording capabilities at the time were constrained by the number of physical tuners available in the DVR(s) located in the home.

- Cable operators and telcos that offer both a Pay TV service and a telephone service were able to integrate these two services with caller-ID on TV as a competitive advantage over other MVPD operators.[46]

As the DSTAC WG2 reported, these innovations do not await agreement on a technology standard. "As one operator put it, if they had waited for the evolution of a standard Mosaic, their Mosaic service would never have launched and consumers would have been denied the competitive choice."[47] Competition among cable, satellite and telco MVPDs, and competitive choices being offered by OVDs and other online providers (such as SlingTV and Sony VUE) creates an incentive to offer new services quickly, and the absences of technology constraints on MVPDs allows new systems and system changes to be implemented rapidly. New features like

[46] The DSTAC Report includes many other examples of innovation in MVPD networks and services. For example, DSTAC Final Report at 38 (DSTAC WG2 at 11): "Start Over and Look Back; Interactive applications within programming, such as DirectTV NFL Ticket/RedZone, Weather Channel, HSN Shop-by-Remote, and request for information ads; Remote access to the DVR; Recommendations, recent tuning history across devices; and personal profiles; Social apps and widgets; Online photos; Audience measurement to optimize program mix; Network DVR/Whole Home DVR; Account management, such as self-serve upgrade to the subscription package from the guide; Voice control; On-screen caller ID and voicemail notifications; On-screen voice to text playback; Mosaic channels; Multiviews; What's trending; Home control; Home networking output with remote user interface (RUI); Cloud delivery to consumer-owned and managed devices, including iOS tablets and smartphones, Android tablets and smartphones, Blackberry, Kindle Fire, Xbox, Roku, PC, Mac, and Smart TVs" and DSTAC Final Report at 299 (DSTAC WG4 at 164): "Video distributors compete with each other by using different technologies. Verizon devoted an entire fiber wavelength to its linear video offering and transitioned to all-digital. AT&T launched its U-verse service designed to maximize its bandwidth for HD and other services. Cable operators responded with switched digital video (SDV) and DTAs to repurpose analog spectrum and add more channels, more High Definition, faster broadband, and more innovative services."

[47] DSTAC Final Report at 39 (DSTAC WG2 at 12).

voice channel guide or voice remote control were implemented relatively easily and new technologies (codecs, media formats, metadata sources, content protection systems, new forms of entitlement, etc.) can be introduced without concern for whether they can be supported by fixed interfaces.

These innovations are also being used by these same MVPDs to compete in the app marketplace, but in ways that utilize and leverage their unique network capabilities and infrastructure.

B. Innovation Using MVPD Apps Today

The apps model leverages network or cloud resources for competitive and innovative purposes across Web browsers and customer-owned devices.

As discussed above, all app developers and publishers create end-to-end interactive systems with code running on the device. For example, Uber has unique network resources that keep track of Uber drivers, enable users and drivers to coordinate on transport requests, and arrange for payment. Drawing on its unique network and resources, it uses an app to create end-to-end interactions between the Uber drivers, Uber customers, and Uber billing. They expose these resources through their app in a compelling and competitive manner. Lyft, meanwhile, has a rival set of resources that it integrates using its own app. Both apps run in a trusted application execution environment on the various apps platforms that they support. Neither operates by broadcasting one-way driver location information to customers and hoping for the best.

Online video content publishers follow the same approach. In the Pay TV market there is a wealth of apps today that provide premium video content. OVDs such as Sony VUE, SlingTV, YouTube, Netflix, Hulu+, Amazon Prime, HBO Go, ESPN 360 and others make their own independent decisions about both their app UI and the content protection systems used in their apps. Netflix, for example, operates its distribution system with apps written to each platform on which it is enabled. Netflix's app operates to comply with its content license agreements (for example, it does not offer recording of content for which it has only streaming rights) and to fit with the retail device capabilities. Some companies may choose to make their network assets available to third parties, but that decision is made by each individual company and is by no means common practice. For example, originally YouTube and Netflix made available APIs to their services, but ultimately closed them down for business reasons.[48]

MVPDs follow the same approach in offering apps to provide video and other services on consumer electronics devices such as PCs/Macs, iOS & Android tablets and smartphones, game stations, media player devices like Roku, Smart TVs and other connected devices. The architectural commonality across all of these models is that the app itself is designed to be an integral part of an end-to-end system.

---

[48] Michael H., "As predicted: Google asks Microsoft to shut down new YouTube app," phoneArena, May 15, 2013, http://www.phonearena.com/news/As-predicted-Google-asks-Microsoft-to-shut-down-new-YouTube-%20app_id43091. Netflix likewise terminated its public API. Janko Roettgers, "Netflix is shutting down its public API today," November 14, 2014, https://gigaom.com/2014/11/14/netflix-is-shutting-down-its-public-api-today.

Apps are widely adopted and MVPDs are beginning to extend this apps approach to more platforms by using HTML5 media streaming standards developed by W3C to reach more retail devices.[49]

The apps market has been designed to foster innovation opportunities by retail device/app platforms, such as Apple iOS and Google Android, and by app publishers. Google's Global Head of Android TV Partnerships articulated this allocation of innovation by design in describing Android TV.

> *"Content owners and distributors are one of the key stakeholders for us. For them, what's crucial is they want to deliver the best user experience and make sure that the content they provide to the user is displayed exactly as they broadcast it. Also in their role as app developer, they need to be able to completely control the experience. Android TV allows them to do all of these things based on our proven technology platform."* [50]

The applications approach also solves the problem of preserving innovation amidst the diversity and rapid change in networks, services, and device platforms. For example, each MVPD's set of metadata and entitlements (reflecting retail business offerings to consumers) is different and constantly changing. Each device platform is different and constantly changing, as well. As pointed out above in Sections I-III, today's apps serve as the vehicle for drawing on the many distinct and changing elements of each MVPD network and tailoring service to the variety of MVPD business agreements within a trusted application execution environment on the various platforms. These execution environments are often quite different and distinctive and, as a result, the streams of content and metadata provided to them are often very different by necessity. Apps abstract that diversity and complexity of service providers and customer-owned devices, and allow rapid updates and rapid innovation by service providers and device manufacturers. Services delivered via apps do not require long timeframes for standardization of APIs for each new feature. Instead, the network operator updates the app and the feature set becomes available through the app. There is no need for nor any benefit to a standard set of internal network interfaces across all MVPDs, or a standard set of metadata, or a standard (constrained) set of retail consumer offerings codified in a standard set of entitlements.

C. The Relationship Between Apps and Innovation

The app ecosystem marketplace has proven to be highly effective in providing opportunities for and delivering innovation by networks, service providers, and device manufacturers. Each segment is able to innovate independently.

First, the device/app platform providers are able to innovate their platforms, both hardware and software, independent of app developers. They are able to introduce new capabilities, such as speech recognition and natural language processing, and make these new

---

[49] DSTAC Final Report at 4; Comcast Corporation Comments, MB Docket No. 15-64, at 9 (October 8, 2015).

[50] Thomas Campbell, "Google: 'Google TV has evolved into Android TV,'" IP&TV News, April 21, 2015, http://www.iptv-news.com/2015/04/google-google-tv-has-evolved-into-android-tv.

capabilities available to the app marketplace. The platform providers compete intensely to provide the best possible platform for apps in order to attract as many high-quality third-party apps as possible. These platform providers have also taken the initiative to work with content providers to ensure that their platforms support the necessary content protection and content presentation capabilities to satisfy the content provider's requirements, which can be demanding for premium content. The device manufacturers compete and differentiate themselves with features, functions, networks, drives, speed, look, feel and price, and choose their own top-level user interface, app store, and menu structure. But at the same time they allow service providers and publishers – including MVPDs – to exercise control over the service and its overall look-and-feel through each provider's app. The different apps are typically selectable icons that, once clicked, present the retail experience of that video provider in the manner selected by that provider, and the consumer can chose to browse or buy from any or all.

Second, the app ecosystem allows MVPD app developers to create innovative new applications, enhance existing applications and deploy them rapidly. This enables them to deploy new revisions of their apps on almost a daily basis. Under today's apps approach, adding new features – as well as changing how existing features are delivered – can be accomplished quickly by making changes on the server side and then updating the app to accommodate those changes.

App developers, in turn, compete intensively in this app marketplace to offer the best apps, and often seek to do so by taking advantage of the latest features of the app platforms. While app platform providers may apply certain conditions on apps (such as usability, avoiding inappropriate content, minimizing software defects, and overall level of quality), app developers are generally not constrained in their ability to innovate their applications. There are no firmly predefined and confining interfaces that place restrictions and bounds on the MVPD app developer's ability to create.

This ability for service providers, including MVPDs, to control their service and its overall look-and-feel through the provider's app is an essential aspect of the allocation of innovation that has evolved in the marketplace.

D. Impact of the NPRM on Innovation

The FCC proposal does more than block the MVPD's app from being able to run in a trusted application execution environment, as it does in today's market. It also interferes with the architectures of MVPD distribution networks and with the apps ecosystem, both of which promote innovation. The NPRM proposes regulations that would insert fixed network interfaces into the middle of these architectures and this marketplace. By inserting fixed interfaces for streaming video, service discovery, or entitlements into the network, the NPRM compromises the independence of networks and applications – and the ability to innovate in either.

As detailed below, placing fixed interfaces in the network adversely affects MVPD apps, consumer offerings and technological innovation. This approach creates a "choke point" that would lock in those technologies, formats, and data sources dictated by the interfaces, interfere with MVPDs' abilities to introduce new features, and waste bandwidth. The proposal would

impede innovation across the network, not just in delivering service to new retail devices. This would impede MVPDs' innovation and the industry's ability to take advantage of technological progress.

1. Entitlement Data and Innovation in Consumer Offerings

Although the NPRM claims the standards it would require "will allow MVPDs to upgrade their networks freely" (¶ 11), the proposal seriously undermines that claim by imposing a standardized Entitlement Data interface.

The NPRM proposes that the Entitlement Data presented to retail devices "reflect *identical rights* that a consumer has on" leased devices.[51] Today, no two MVPD entitlement systems are the same. They change all the time with changes in marketing. If entitlement data is standardized, an MVPD could not create a new consumer offering unless it can be expressed through the standardized rights expression language conveyed through the Entitlement Data interface. Suppose an MVPD is willing to sell video by the hour (for example, a block of 50 or 100 hours of viewing) and can track it through a new system. If there is no standard entitlement expressing this new offer through the standardized entitlement interface, then the MVPD may not make the offer at all -- even to consumers who chose not to use a retail device.

Changes to the Entitlement Data interface would require additional standards-body effort or other organizational action, which (1) could introduce costly delays, and (2) given the required make-up of a compliant body under the FCC proposal, could allow the MVPD's competitors to thwart the roll-out of those new features or to misappropriate the new offer into third-party devices and services. Inserting fixed interfaces into the network constrains the ability to evolve the network because all endpoints and all network interfaces must evolve in a tightly coupled and synchronized manner.

2. Content Delivery Interface and Video and Audio Innovation

The content delivery interface would freeze audio and video formats, resolution, and encoding, thus forcing older, less efficient codecs to be carried on the network potentially indefinitely (and certainly long past their useful life), requiring a highly inefficient simulcast and wasting bandwidth. Beneficial innovation often emerges without backwards-compatibility. HEVC is not backward compatible with MPEG 4, which is not backward compatible with MPEG 2. This means an MPEG 2 decoder cannot obtain a usable video presentation from an MPEG 4 stream. Similarly, an MPEG 4 decoder cannot obtain a usable video presentation from an HEVC video stream. Similarly, ATSC 3.0 is not backward compatible to ATSC 1.0. Since (a) hundreds of millions of consumer television sets today have a hardware implementation of ATSC 1.0, and (b) ATSC 3.0 is not backwards-compatible with ATSC 1.0, implementation of the far more advantageous (and 4K compatible) ATSC 3.0 is fraught with problems and uncertain timelines, despite the fact that some have said that the "future of free over the air

[51] NPRM at ¶ 39. It further clarifies that this means that "Entitlement Data [must] be *identical* for competitive navigation devices and MVPD-provided navigation devices" (emphasis added).

television is questionable" without it.[52] As noted in the article cited, transition to ATSC 3.0 would require massive swap-outs of existing consumer-owned equipment and introduce a host of other problems, such as the need for additional bandwidth for simulcast during that transition. Thus locking into one standard effectively interferes with implementation of the next advanced standard which is invented.

Audio and video formats are also undergoing innovative changes that would be constrained by the interfaces. Audio and video formats are evolving with 4K, 8K, High Dynamic Range (HDR), Wide Color Gamut (WCG), immersive audio and video, virtual reality, and more. Different MVPDs may adopt different technologies at different times. Inserting the proposed fixed interfaces into the network constrains the ability to evolve the network because all endpoints and all network interfaces must evolve in a tightly coupled and synchronized manner. The NPRM's fixed interfaces will freeze delivery to the "competitive" retail devices contemplated by the NPRM. Renegotiating the interfaces would introduce several years of delay into the adoption of newer technologies.

3. Content Delivery Interface and Innovation in Bandwidth Management

The content delivery interface would lock in specific transport and content formats even as more bandwidth efficient technologies emerge. For example, standardizing on MPEG-2 transport or MPEG-4 content would adversely affect bandwidth and migration to new technologies, such as HEVC and/or ISO Base Media File Format for Adaptive Bit Rate delivery. More efficient use of bandwidth would need to await industry consensus and change in standard.

4. Impact of Fixed Hardware Interfaces on Innovation

Fixed hardware interfaces over time tend to limit the ability to benefit from technological progress. It is for this reason that the satellite communications industry has avoided launching into orbit satellites containing fixed baseband hardware interfaces. Processing satellite repeaters onboard spacecraft have been available since the 1970s and it has been recognized that in most cases they can improve performance by decoupling the noise on the uplink and downlink of the satellite path. However, these repeaters have generally been avoided because within 5-10 years their technology will be eclipsed by better performing, newly discovered technology. Thus, within half the life span of a satellite, a hypothetical DVB-S demodulator placed on board would have been overtaken in performance by a non-backward compatible DVB-S2 demodulator giving greatly improved link performance. Consequently, the satellite industry has generally avoided installing fixed baseband hardware interfaces, such as processing repeaters, and instead has utilized techniques which readily adapt to technological progress and permit any modulation method. The FCC's proposal is essentially retrofitting onto all MVPDs the fixed interfaces that MVPDs have wisely avoided in order to continue with their technological innovation.

---

[52] Doug Lung, "Getting Ready for ATSC 3.0," TV Technology, July 23, 2015, http://www.tvtechnology.com/atsc3/0031/getting-ready-for-atsc-30/276660.

5. "Parity" and Innovation in Cloud-Based "Boxless" Solutions

The NPRM states that "our proposal may make it easier for MVPDs to offer cloud-based services because it gives each MVPD the flexibility to choose the standards that best achieve its goals."[53] But the NPRM proposes three requirements intended to assure "parity" between leased and third-party Navigation Devices[54] that from a technical perspective constrain the offering of cloud-based services and introduce additional constraints on innovation.

Parity would create significant barriers to MVPDs' migrations to "boxless" solutions. "Boxless" solutions – that is, MVPD-developed apps running on consumer-owned devices that connect directly to cloud-based servers rather than an in-home device – not only can eliminate the need for MVPD-provided equipment, they also can produce significant energy savings, as discussed below in Section VII. The "parity" requirements would prohibit an MVPD from making a "boxless" solution available on one device *with an app* unless it also makes a boxless solution available for every third-party device or application *without an app*, MVPDs would be prohibited even from limited "boxless" trials unless and until they are able to build out the mandated interfaces with sufficient bandwidth and other resources to support an unknown, unknowable, and potentially overwhelming number of requests for the Information Flows from third-party devices and apps. The requirement would significantly delay the migration to "boxless" solutions.

6. "Parity" and Bandwidth Management

The "parity" requirements would also remove a primary tool used to manage limited network resources. The problem with this requirement is that it fails to recognize how MVPDs plan for stream requests from retail devices. An MVPD's successful and timely migration from leased-equipment-dependent to "boxless" solutions will hinge upon its ability to carefully manage, throughout that process, a number of limited resources: bandwidth, obviously, but content servers and other network resources, as well. MVPDs today manage the number of stream requests they receive from retail devices by writing apps for those retail platforms that provide technical tools for managing limited network resources. Using this approach, MVPDs have been able to deliver their services to customers on devices that they already own – while still exercising some control over network resources. By contrast, the proposal would threaten existing networks with an unknown number of new devices, potentially more than those networks were built to support, while denying MVPDs any technical tools to allow them to manage those demands. Providing unaffiliated devices with information about the maximum number of simultaneous video streams that can be watched or recorded, as suggested in the

---

[53] NPRM at ¶ 46.

[54] "First, if an MVPD makes its programming available without requiring its own equipment, such as to a tablet or smart TV application, it must make the three Information Flows available to competitive Navigation Devices without the need for MVPD-specific equipment. Second, at least one Compliant Security System chosen by the MVPD must enable access to all the programming, with all the same Entitlement Data that it carries on its equipment, and the Entitlement Data must not discriminate on the basis of the affiliation of the Navigation Device. Third, on any device on which an MVPD makes available an application to access its programming, it must support at least one Compliant Security System that offers access to the same Navigable Services with the same rights to use those Navigable Services as the MVPD affords to its own application." NPRM at ¶ 63.

NPRM, would not change the fact that (a) MVPDs would lose any ability to manage their networks, and (b) third-party Navigation Devices would have no incentive to use those MVPDs' limited network resources efficiently. As a recent article explained: "the FCC assumes that because a pay TV operator can deliver some video services over IP to a third party device that all services can be delivered this way to all customers…. The national infrastructure needed to support more than 200m simultaneous real-time encoded streams does not exist."[55]

7. "Parity" and Security

The "parity" provisions relating to "Compliant Security Systems" would create additional barriers to MVPDs' migrations to "boxless" solutions. Specifically, they would limit the level of content security MVPDs could provide within their own apps to that which is provided by commercially available DRMs offered on a RAND basis. MVPDs deliver their services to customer-owned devices using apps protected by DRMs. The DRMs used today by MVPDs – which include Adobe Primetime, Apple FairPlay, Microsoft PlayReady, Nagra, NDS VideoGuard Connect and SecureMedia – are sold as a service and as part of a larger security trust infrastructure, rather than being available on a RAND basis. Content security would be limited to whatever was offered by a security vendor on RAND terms, which may not offer a comparable set of security tools to the DRMs used by MVPDs today.

If these proposed "parity" requirements were to be adopted, an MVPD would also be prohibited from deploying a next-generation security solution that supports a new consumer offering – for example, allowing customers to buy video on a per-hour, rather than a monthly, basis – unless a commercially available DRM available on RAND terms can enable that same feature with the same level of security. A content owner would be denied the ability to segment the market – for example, by making wireline rights to a sporting event available to all traditional MVPDs but granting exclusive wireless rights to just one mobile company – because if the content is made available to one provider out of the home, it must be made available to all;

A content owner could not experiment with a new type of offering – such as an offer by which a consumer who already owns two movies in a series can purchase the third at a discount – on just one platform. If it experiments on one specific platform, it would be forced to offer it to all; and

An MVPD could not replace the Compliant Security System with a new Compliant Security System unless that successor is compatible with all existing devices and apps – which is unlikely to be the case due to additional processing, memory, and other robustness requirements that arise over time.

[55] Mark Barrington, "Why the FCC won't unlock the box," February 22, 2016, https://medium.com/@markbarrington/why-the-fcc-won-t-unlock-the-box-2ff0029cb251#.sgbwfycd6.

8. IP Multicasting: A case study on the NPRM's fundamental design flaw that impedes innovation and technological progress by MVPDs

As described above, by inserting fixed interfaces into the network the proposed mandatory architecture would constrain MVPDs' ability to evolve their networks because all endpoints and all network interfaces must evolve in a tightly coupled and synchronized manner, rather than enabling independent innovation in networks, services, and devices. The discussion below applies this concern to a specific capability: IP multicasting.

But first, a little history: a recent example of the unintended effects of standardizing technology solutions in a rapidly evolving market is Switched Digital Video (SDV) and one-way retail CableCARD devices. The CableCARD interface for one-way retail devices was only designed to support linear broadcast cable television channels. SDV is essentially a multicast system for MPEG-2 digital broadcast television limiting the number of broadcast signals transmitted into a service group to only those actively being watched. This bandwidth saving mechanism allowed the introduction of many more linear television channels in the same amount of spectrum, or it freed bandwidth to be used for other services such as broadband Internet access. When SDV was introduced into a cable system the one-way retail CableCARD device was unable to access SDV channels because it lacked two-way communications capabilities. It was necessary to design an entirely new piece of equipment, the Tuning Adapter, to provide a proxy for this two-way communications function.

With that experience in mind, consider the transition of IP protocols for streaming video content over the Internet. IP streaming protocols have evolved over the past decade or more from Real Time Streaming Protocol (RTSP) to various Adaptive Bit-Rate (ABR) protocols, for example Apple's HTTP Live Streaming (HLS), Adobe's HTTP Dynamic Streaming (HDS), and Microsoft's Smooth Streaming. When streaming video was initially introduced on the Internet, RTSP was commonly used as the transport protocol, as video was viewed as time-sensitive traffic requiring isochronous transport provided by RTSP. One of the difficulties of using RTSP over the Internet was the lack of Quality of Service (QoS) guarantees, which resulted in frequent stalling and re-buffering of video streams. ABR protocols enabled adaptation in real time to changes in the bandwidth available over an Internet connection and avoided the stalling and re-buffering that RTSP streams encountered. If fixed interfaces had been mandated during this period, however, the transition from RTSP to ABR would have been significantly delayed by the necessity to standardize on a common ABR protocol, implementation and testing of it by all of the MVPDs and retail device manufacturers, and an extended transition period during which both protocols would have to be supported. Indeed, the MPEG Dynamic Adaptive Streaming over HTTP (DASH) standard, which was at least a year in development, has yet to be fully adopted and HLS, HDS, and Smooth Streaming remain the dominant ABR protocols in use today.

Looking ahead to the development of multicast IP transport for increased bandwidth efficiency for linear content, the imposition of fixed interfaces for service discovery, content delivery and entitlement streaming into the network would create the very delays in MVPD network innovation that were avoided on the Internet. As with SDV, IP multicast will similarly only transmit the video to devices that have requested to receive it. This eliminates the transmission of streaming video over portions of the network where no client device has

requested it, freeing up bandwidth for other applications and other users. As in ABR protocols for Internet streaming, a number of different IP multicast protocols have either been deployed or are in development. If fixed interfaces are mandated for the delivery of video and entitlements, it would necessitate standardization on a common multicast protocol, implementation and testing of it by all of the MVPDs and retail device manufacturers. This would significantly delay the adoption of IP multicast for streaming of linear video content.

If the NPRM requires standardizing on IP multicast now for its three interfaces, MVPDs would either need to (1) sacrifice rapid innovation in IP multicasting across the network, even for their own services, and be limited to the frozen standard required by FCC regulation; or (2) simulcast two different forms of IP multicast—one for the regulated interfaces, and one for the rest of the MVPD network – so that it can keep evolving- which costs even more bandwidth.

In summary, the FCC NPRM set-top box proposal does not meet the NPRM's objectives for rules that do "not impede innovation" and that it "should not prescribe a particular solution that may impede the MVPD industry's technological progress."

V. THE FCC PROPOSAL WEAKENS SECURITY AND INCREASES THREATS OF THEFT-OF-SERVICE

The FCC-proposed architecture greatly reduces security by removing technological protection measures; by allowing not just device manufacturers, but also software developers to access the FCC proposed mandatory interfaces; and by increasing the exposure to pirated content and malware. Initially security in cable systems was focused on preventing theft of service, but with the broad adoption of the Internet the security threats to cable systems have expanded greatly to now include security threats from cyberspace. Because the retail devices are "connected" devices, and because the FCC proposal dismantles all the network segregation, security architectures and best practices, it raises the threat level not just to pay TV content and networks but to the entire interconnected ecosystem.

A. Cyberspace

The White House defines *cyberspace* as "the interdependent network of information systems that includes but is not is not limited to the Internet" and *cybersecurity* is "the protection of those systems connected to the cyberspace from harm."[56] As noted by the Department of Homeland Security, cybersecurity threats come from an array of sophisticated actors and nation states who seek to exploit vulnerabilities to steal information and money as well as seeking to disrupt, destroy or threaten the delivery of services.[57] Video delivery systems and their associated navigational devices (e.g., set-top boxes) are not immune to these threats as they too rely on networked information delivery systems that may or may not be interconnected to the Internet.

---

[56] National Security Presidential Directive 54/Homeland Security Presidential Directive 23 (NSPD-54/HSPD-23), January 8, 2008, http://fas.org/irp/offdocs/nspd/nspd-54.pdf.

[57] Department of Homeland Security, Cybersecurity Overview, September 22, 2015, https://www.dhs.gov/cybersecurity-overview.

In existing cable system architectures, the subscriber-facing hardware and software is designed to be an integral part of an end-to-end system and provides protection from cybersecurity threats. In fact, this cyber protection is part of the integrated design. Currently STBs provide a trusted application execution environment where cybersecurity best practices can be implemented. Security today is maintained through a combination of DRMs, apps, and licenses all operating in a well-understood hardware environment.

B. Apps Security

The current apps model ensures greater security than any DRM on its own. It provides for end-to-end security and frequently includes not only software but a hardware root-of-trust including a secret key ladder (KLAD) which not only provides for day to day security, but has the built-in capability of responding to hacks and compromises by being compatible with the electronic counter measures (ECM) employed when a hack occurs. As mentioned, this not a theoretical capability. It has been employed many times in the past and such breaches are inevitable: the question is how to best respond to such breaches, and the current trusted execution environment (TEE) does that well.

Apps developed by MVPDs as part of the security system do more than just DRM. Digital Rights Management, as the name itself implies, is primarily a "rights" type verification to manage the use, modification and distribution of copyrighted works. It is frequently termed "copy protection" or "copy control" and is often confused with the term "Conditional Access System" (CAS). The NPRM requires that unaffiliated vendors must implement content protection to ensure the security of the MVPD services.[58] The content protection used by unaffiliated vendors will be limited to only DRMs, rather than using a security by layers model that includes a root of trust and secret key ladder as is common for MVPDs. The security used by retail devices will not be as secure as the protection used by MVPDs.

Often content providers will place restrictions on the quality (resolution, fidelity) and location of content provided to end devices. However, DRM by itself cannot and does not take the device's location into account and cannot distinguish whether the device is located at the subscriber's home or another location where the content is not licensed to be distributed. DRM merely looks to enforce the use, modification and distribution of the content. To accurately determine the device's location requires information from the device itself, which is implemented today by the MVPD apps.

The MVPD's apps use the full spectrum of tools available for the specific device. This includes the location awareness, resolution awareness as well as the rights and copy protection. For example, the location is often determined by retrieving the location information from the embedded GPS hardware in the device itself as geo-lookup by IP address is susceptible to errors and spoofing. The device's entitlement to display the content is performed by authenticating that the device is authorized per the MVPD subscriber's plan. Furthermore, as part of the authentication and authorization process the MVPD can tell the app what services are available. Under the proposed NPRM all the services are exposed, even those to which the customer does

[58] NPRM at ¶ 29.

not subscribe, with the security of the specific assets beholden to the device's respect for the metadata delivered through the separate entitlement's interface.

The NPRM requires that unaffiliated vendors implement content protection to ensure the security of the MVPD services.[59] The NPRM does not place any requirements as to the type or strength of this content protection. As noted in Section II, a content protection system alone is not sufficient to protect all the licensing terms of the content. As noted in DSTAC WG2's report, security is provided through a defense in layers approach that is built upon a trust infrastructure.

In the apps model, the app itself provides an encapsulated environment where licensing, regulation, content, copyright, piracy, EAS and other functions reside – all part of the integrated end-to-end cable system. Within this known app environment, cybersecurity best practices can be implemented. In fact, this is a common design practice. Whether the app is Netflix, Amazon, Hulu or other content provider, these apps incorporate the necessary "software CPE" side of an overall end-to-end system. These apps do not make further software interfaces available to other devices or applications. Doing so would render their functionality compromised.

But the NPRM does not provide end-to-end security. It requires that open interfaces be made available to other devices. It addresses this architectural breach by claiming that simply some undefined level of content protection will be sufficient, when as described in Section II, a DRM decoupled from the app (or link-layer security such as DTCP-IP) cannot secure channel location and other aspects of protection required by content providers. Content protection alone is not security. Content protection only manages the use and distribution of the content. Content protection systems do not and cannot ensure that all the other licensing terms associated with the content are met such as channel placement, advertising restrictions, restrictions on search results, localization restrictions, start-over and look-back features, or VoD transactions. In addition, content protection does *not* address and cannot address securing the information flows from cyberattacks such as tampering, denial of service attacks, or man-in-the-middle attacks.

C. Cybersecurity

While the NPRM talks about content protection, protecting information is only one aspect of cybersecurity. Cybersecurity is much broader than merely protecting information as it must also address attacks to the delivery of services and theft of money. Examples of cyber attacks and incidents include:

- Pirated content using the Kodi app on Amazon Fire TV – The Amazon app store was circumvented by third party developers who developed plug-ins for the Kodi app that allowed the Amazon Fire TV to stream pirated content.[60]

[59] NPRM at ¶ 29.

[60] "Free TV and Movies with 1 Channel XBMC Kodi Library Integration," March 5, 2015, https://gameroomsolutions.com/free-tv-and-movies-with-1channel-xbmc-kodi-library-integration.

- Home routers infected with malware – Home routers are used by many consumers to allow multiple devices in a home to share an Internet connection. These same home routers have been increasingly used as the attack surface for attacks that disrupt internet services and steal information.[61]

- Large scale denial of service attacks – There is a long history of denial of service (DOS) attacks. DOS attacks are attacks that use large volumes of traffic to consume a combination of network bandwidth and/or computing resources to disrupt a service. One of the largest publicly announced attacks was an attack in 2013 against Spamhaus.[62]

- Stuxnet – Stuxnet was computer virus that did not need the Internet to spread. Instead it used a removable USB thumb drive as its carrier to the next computer. Once a computer was infected the virus would cause the computer to malfunction.[63]

In response to the growing threat to nation's critical infrastructure from cyber threats, the President issued Executive Order 13636 – Improving the Critical Infrastructure Cybersecurity[64] – that directed the National Institute of Standards and Technology (NIST) to develop a voluntary, flexible, repeatable, performance based, and cost-effective cybersecurity framework[65] that could be used by the owners and operators of critical infrastructure to reduce their cyber risks. The NIST Cybersecurity Framework is a risk-based approach that aligns business drivers with cybersecurity activities. The cybersecurity activities that make up the core of the NIST Cybersecurity Framework consist of five concurrent and continuous Functions – Identify, Protect, Detect, Respond, and Recover. The five functions provide a high-level strategic view of the lifecycle of cybersecurity risk management.

The NPRM is totally silent on cybersecurity. It does attempt to address content protection, but is remiss in not addressing the larger issue of how to design and deploy a system that is robust and resilient to all forms of cybersecurity threats. Further, the FCC proposal does not even fit within standard cybersecurity best practices that were adopted by one of the FCC's

---

[61] Dan Goodin, "Bizarre attack infects Linksys routers with self-replicating malware," Ars Technica, February 13, 2014, http://arstechnica.com/security/2014/02/bizarre-attack-infects-linksys-routers-with-self-replicating-malware; Lucian Constantin, "Update: Malware-infected home routers used to launch DDoS Attacks," ComputerWorld, May 12, 2015, http://www.computerworld.com/article/2921559/malware-vulnerabilities/malware-infected-home-routers-used-to-launch-ddos-attacks.html; Samara Lynn, "How to Find, Remove DNSChanger from Your Router," PCWorld ,July 6, 2012, http://www.pcmag.com/article2/0,2817,2406806,00.asp.

[62] Matthew Prince, "The DDOS That Almost Broke the Internet," Cloudflare, March 27, 2013, https://blog.cloudflare.com/the-ddos-that-almost-broke-the-internet.

[63] David Kushner, "The Real Story of Stuxnet," IEEE Spectrum, February 26, 2013, http://spectrum.ieee.org/telecom/security/the-real-story-of-stuxnet.

[64] Improving Critical Infrastructure Cybersecurity, Executive Order 13636, February 19, 2013, https://www.gpo.gov/fdsys/pkg/FR-2013-02-19/pdf/2013-03915.pdf.

[65] National Institute of Standards and Technology, "Cybersecurity Framework," February 1, 2014, http://www.nist.gov/cyberframework/index.cfm; National Institute of Standards and Technology, "Framework for Improving Critical Infrastructure Cybersecurity," at 20, http://www.nist.gov/cyberframework/upload/cybersecurity-framework-021214-final.pdf ("NIST 2014").

advisory committees – Communications Reliability Security Interoperability (CSRIC) Council – in March 2015.

D. NIST Cybersecurity Framework

The NIST Cybersecurity Framework's Core provides a set of activities for each of the five functional areas to help achieve specific cybersecurity outcomes.

1. **Identify** – The Identify function includes asset management and risk assessment. As outlined in the NIST Cybersecurity Framework asset management involves inventorying both the physical devices and software platforms, mapping data flows, and cataloging external information systems. The NPRM does not provide a means for an operator to inventory the physical and software proposed third party platforms that make up the open, competitive navigational system. Information deemed necessary for effective accountability includes hardware inventory specifications (manufacturer, device type, model, serial number, and physical location), software license information, software versions, component owners, and network addresses.[66]

2. **Protect** – The Protect activities include but are not limited to access control, data security, and protective technology.

    a. Access control requires managing the identity and credential for authorized devices and users.[67] The NPRM would mandate exposing three one-way information flows with no means to authenticate and authorize access to these steams.

    b. In addition, access is controlled to ensure network integrity through the incorporation of network segregation[68] by separating the publicly accessible system components from the internal organizational networks.[69] The FCC's proposed architecture does not take into account any of the NIST Cybersecurity Framework's Protect functions. For example, the NPRM proposes that all the end devices connect and access the three information flows using the Internet Protocol via the network. This approach has the potential to undermine the overall system as it implicitly requires all the necessary systems (entitlement, content, services) to be accessible from the Internet. For example, in the widely-reported 2015 Jeep Grand Cherokee hack[70], the hackers hacked into the Jeep's infotainment system that included Internet access via a cellular network connection. That system was connected to the Jeep's internal communication bus (i.e., a private network) and

[66] National Institute of Standards and Technology, NIST Special Publication 800-53 Rev 4 – "Security and Privacy Controls for Federal Information Systems and Organizations," at F-73 ("NIST 2013").

[67] NIST 2014 at 23; NIST 2013 at F-7.

[68] NIST 2014 at 24.

[69] NIST 2013 at F-188.

[70] Dr. Charlie Miller and Chris Valasek, "Remote Exploitation of an Unaltered Passenger Vehicle," August 10, 2015, http://illmatics.com/Remote%20Car%20Hacking.pdf.

from there they were able to then hack into the car's computer to take over the car. As another example, two radio stations were recently reported to have been hacked through their Internet simulcast and having had their broadcasting taken over by the hackers' sexually explicit podcast.[71] Because the NPRM fails to segregate and safeguard the MVPD's application from the portion of new retail devices connected to the Internet, it invites the same attack surface and attack vector, thus exposing the back-end MVPD servers. By contrast, the system in use today, as well as the proposed HTML5 system, are consistent with best practices described in the Framework and NIST-800-53 as they have provisions in them to segregate the different data elements from each other. To date, all MVPD video networks have been private, managed networks, only connected by known devices with MVPD-controlled code. Even CableCARD kept third-party device code from accessing the MVPD managed network. The NPRM proposes that all MVPDs be forced to have large numbers of devices with unknown, untested code accessing their protected networks. The NPRM essentially breaks the firewall.

c. To protect information integrity, the Framework recommends the use of integrity checking mechanisms to verify software and firmware.[72] The FCC's proposed architecture and the proposed self-certification approach are not consistent with the Framework and do not provide any means to safeguard against compromised software from getting loaded on to the end-devices. The one-way nature of the three mandated information streams does not provide any means for an MVPD to validate that a third party set top box does not have compromised software running on it.[73]

3. **Detect** – Detect involves continuous monitoring of the system for cybersecurity events.[74] This involves monitoring for anomalies, detecting malicious code, monitoring for unauthorized devices, etc. Again, the design of the FCC's proposed architecture is remiss in supporting the NIST Cybersecurity Framework as the NPRM's three one-way information streams do not include any telemetry data from the end-devices that can be used in the monitoring of the system.

4. **Respond** – Respond covers the activities that are performed when a cybersecurity event is detected to contain the potential impact. Two of the key response activities outlined in the NIST Cybersecurity Framework are analysis and mitigation. To properly investigate a cybersecurity event requires analyzing data to understand the impact.[75] Again, the

---

[71] Ars Technica, "Nation-wide radio station hack airs hours of vulgar 'furry sex' ramblings," April 7, 2016, http://arstechnica.com/security/2016/04/nation-wide-radio-station-hack-airs-hours-of-vulgar-furry-sex-ramblings.

[72] NIST 2014 at 26; NIST 2013 at F-225.

[73] It is noted in Section VII.C. that the development the chip-enabled credit card system carefully created an end-to-end system – including the credit card itself as part of the secure environment. In contrast, in the FCC-mandated architecture, the consumer third party device is not part of the end-to-end system, and cannot be secured, and as a result does not have the ability to fulfill the "Protect" functionality of the NIST Cybersecurity Framework.

[74] NIST 2014 at 30.

[75] NIST 2014 at 34.

design of the FCC's proposed architecture is remiss is supporting the Framework as the NPRM's three one-way information streams do not support retrieving data from breached devices.

5. **Recover** – Recover is the set of activities involved in restoring service to normal operations in a timely manner. These activities include recovery planning, improvements and communications. A core tenet of the NIST Cybersecurity Framework is flexibility and adaptability and as part of this is continuous improvement based upon learning and improving upon cybersecurity events. The ability to update a system to remedy a vulnerability is fundamental to a sound cybersecurity risk management strategy. The NPRM proposes that the three streams of information that conform to an open standard. Standards development require consensus and take time to update as innovation and evolution occur. This use of an open standards body to address cybersecurity threats is counter to the core tenets of Framework and will make the system brittle and susceptible to repeated breaches when vulnerabilities are discovered and disclosed. The NPRM also provides no way to update the code in the device, nor any way to test to ensure that a third-party device manufacturer has fixed vulnerabilities.

E. Supply Chain Risk Management

Part of any comprehensive cybersecurity risk management strategy is the securing of the supply chain.[76] In 2016, the Communications Security Reliability and Interoperability Council (CSRIC), an advisory committee to the FCC, adopted a report that made recommendations regarding Security By Design. The report recommended that:

> "[C]ommunications sector members should use the best practices detailed in this report as a reference for working with vendors and suppliers to reduce cybersecurity risk with the core network. Communications sector stakeholders that provide hardware and software products and services for the core network should reference the best practices to help ensure security by design principles are collaboratively addressed"[77]

The report references a number of security-by-design best practices including NIST 800-161, *Supply Chain Risk Management Practices for Federal Information Systems and Organizations*, as well referencing the application of the NIST Cybersecurity Framework to one's supply chain. NIST 800-161 infuses systems security engineering techniques, methods, and practices from a set of well-established international standards into the systems and software engineering processes. The goal here is to address security early-on in the life-cycle development process and not as an afterthought.

---

[76] NIST 2014 at 21.

[77] Communications Security, Reliability and Interoperability Council, Secure Hardware and Software: Security-By-Design Working Group 6 – Final Report: "Best Practices for Hardware and Software Critical to the Security of the Core Communications Network," ("CSRIC 2016").

The FCC's proposed architecture is clearly approaching managing the security of the supply chain as an afterthought to be left to the consumer. The NPRM treats security as a binary where the device is either deemed authorized or not authorized and the only action the MVPD can take when it deems a device misbehaving is to revoke the device's authorization to connect to the network and leaving the consumer with an unusable device.

A best practice in cybersecurity risk management is continuous improvement by applying lessons learned from cybersecurity events and is one of the primary themes in the NIST Cybersecurity Framework. One of the keys to this approach is having systems that can adapt to the changing conditions. The NPRM would mandate three static one-way information flows to be based upon open standards to serve as the application programming interface (API). By the very nature that these are static and any changes to them require consensus and approval by the open standards body, and then be implemented across the ecosystem means the response time to vulnerabilities will be long. Building consensus in open standards bodies takes years and takes yet more time for all these agreed upon changes to be implemented across an open ecosystem. The transition to IPv6 is a good example. The development of the IPv6 standard itself took over six years. The implementation and adoption of IPv6 started in 1998 and is still on-going almost 20 years later.

The proposal in the NPRM to require three flows of information is not well thought out with respect to security and the broader realm of cybersecurity. Exposing and requiring that the three streams to be accessed by anyone or any device on the Internet poses a significant risk of compromise, content theft and device cloning. The FCC's proposed architecture is counter to many of the best practices in cybersecurity that have been captured in the NIST Cybersecurity Framework and then further re-enforced by the FCC's CSRIC advisory group, Working Group 4 of CSRIC IV – Cybersecurity Best Practices, report that extended and tailored the Framework to the communications sector[78] and was adopted by the CSRIC council in 2015. As noted earlier, one of the best practices in cybersecurity is network segregation.

The idea behind network segregation is keeping different types of data separate from one another. For example, in financial systems financial information is kept on one network that is completely unconnected to the Internet and access to the Internet is kept on its own network; and these networks don't cross.[79] The same concepts are applied by engineers when engineering cable networks for cable systems. The "one-way" interfaces proposed in the NPRM for the information streams exposes the entitlement information to any and all including bad actors (i.e., hackers, nation states, criminals, etc.). The bad actors could avail themselves of this information and clone the retail devices[80] or modify one's authorized content entitlements. Even if the entitlements stream were protected by a public-private keying system as proposed in the NPRM,

---

[78] Communications Security, Reliability and Interoperability Council, Cybersecurity Risk Management and Best Practice Working Group 4 – Final Report ("CSRIC 2015").

[79] Keith Stouffer, Joe Falco, and Karen Scarfone, NIST Special Publication 800-82 – "Guide to Industrial Control Systems (ICS) Security," 2015.

[80] Owen Parsons, "DOCSIS Theft and Cloning," CED Magazine, March 5, 2013, http://www.cedmagazine.com/article/2013/03/docsis-theft-and-cloning ("Parsons 2013").

there would be no safeguards within the retail device for the key once it was decrypted.[81]

Further compounding this vulnerability is the fact that the proposal prohibits MVPDs from fulfilling their current role of Trust Authority, thereby further undermining their ability to ensure that they are able to comply with the commitments they have made to content owners. Being the trust authority for a network is the fundamental responsibility of being a content distributor.

Even with public-private keying systems, devices are susceptible to man-in-the-middle (MITM) attacks. The proposal in the NPRM to serve the three information streams from the cloud are equally prone to MITM attacks. MITM are attacks where a malicious user inserts himself between two parties in communication and impersonates both sides of the exchange. In the cloud architecture proposed in the NPRM, a bad actor can impersonate the interfaces for the three streams through the use of forged certificate or improper certificate processing or key management by the device. There have been numerous reported vulnerabilities of this type.[82]

The NPRM will actually facilitate and help to perpetuate the illegal distribution of protected content. There is a history of open platforms, even those that support link protection protocols, of getting misused by third party software developers. The Kodi application (https://kodi.tv) that runs on retail streaming devices (e.g., Amazon Fire, Roku, Google Chromecast) was designed to allowed users to stream content from their home servers to their TVs. The application also supports third-party plugins. The plug-in interface has been leveraged by third-party developers to enable the distribution of pirated content.[83] If third party device manufacturers have no contractual relationship with content owners or distributors, as proposed in the NPRM, they have little incentive to eliminate any such vulnerability.

F. Content Protection vs. Security

The NPRM treats content protection as synonymous with security when in fact content protection is merely one use case of security. Securing the system, however, requires more than just content protection; a properly designed security system must take into consideration a number of related objectives. For example, a holistic security system must protect licensing terms, including channel placement, advertising restrictions, restrictions on search results, and localization restrictions. In addition – and in part because the proposal would open the Information Flows not just to navigation devices, but to third-party apps, as well – a comprehensive security solution also should adhere to the core principles of the NIST cybersecurity framework and adequately address asset management, access control (that is,

---

[81] Parsons 2013.

[82] US-CERT, Vulnerability Note VU#260780, "NetNanny uses a shared private key and root CA," April 20, 2015, https://www.kb.cert.org/vuls/id/260780; US-CERT, Vulnerability Note VU#870761, "Dell Foundation Services installs root certificate and private key," December 1, 2015, http://www.kb.cert.org/vuls/id/870761; US-CERT, Vulnerability Note VU#720951, "OpenSSL TLS heartbeat extension read overflow discloses sensitive information," April 7, 2014, http://www.kb.cert.org/vuls/id/720951.

[83] AFTVnews, "Amazon Appstore removed Kodi for false reputation of 'facilitating piracy,' while Google Play Store approves Kodi," June 15, 2015, http://www.aftvnews.com/amazon-appstore-removed-kodi-for-false-reputation-of-facilitating-piracy-while-google-play-store-approves-kodi.

device and user authentication/authorization and network segregation), information integrity checks, event detection, response and recovery.

While implementing content protection would address the narrow issue of securing raw content, it falls well short of meeting all the necessary security requirements for an MVPD service. The FCC's belief that CableCARD is aligned with the FCC rules is incorrect.[84] CableCARD is a one-way system into the unidirectional digital cable device and therefore does not provide a path for an MVPD to monitor the behavior of the end-device to ensure it is compliant with all the licensing terms. In addition, CableCARD only provides the conditional access function. Therefore, as proposed there is no viable implementation that can be made secure. Even an implementation based upon a media gateway or second box in the home will not be sufficient to address all the security requirements for today's environment.

VI. THE FCC-PROPOSED MANDATORY ARCHITECTURE REQUIRES A NEW IN-HOME BOX FROM MVPDS TO SUPPORT RETAIL DEVICES

The NPRM will require a new piece of customer premise equipment to be added in the subscriber's home, despite the NPRM's statements to the contrary.[85] The DSTAC Report acknowledged this fact with respect to 40 percent of the MVPD marketplace at a minimum – that is, to those customers served by satellite and IPTV providers.[86] But the NPRM will also require cable to install new in-home CPE to support the mandated information flows.

The NPRM offers a false choice to MVPDs. This false choice is to either deploy cloud services supporting the three Information Flows or to develop, test, and deploy an FCC mandated device in the home to generate these three Information Flows from the MVPD's specific network technologies. Either choice introduces significant burdens on the MVPD and requires network redesign. The difference is that, as detailed above, redesigning the network to support the mandated information flows will consume spectrum and network capacity and handicap MVPD network development by locking in artificial standards that constrain network and service evolution.

If the MVPD chooses to implement the three Information Flows in the cloud it will consume additional network bandwidth to simulcast the content for retail devices, duplicating the existing bandwidth used to carry the content to MVPD set-tops or apps. The FCC's proposed technology mandate would require the creation of a new standardized transmission method that is not compatible with the wide variety of existing transmission methods in use in MVPD

---

[84] NPRM at ¶ 81.

[85] NPRM at ¶ 46: "We believe that our proposal does not require most MVPDs to develop or deploy new equipment, nor would it require subscribers to obtain additional or new equipment. In fact, our proposal may make it easier for MVPDs to offer cloud-based services because it gives each MVPD the flexibility to choose the standards that best achieve its goals."

[86] DSTAC Final Report at 286 (DSTAC WG4 at 151). A major proponent of the FCC's proposal, Public Knowledge, has also stated that "you're probably in the short term going to need something in the house." Jared Newman, "The FCC wants to blow up the cable box. Here's what it's proposal will (and won't) do," February 25, 2016, http://www.techhive.com/article/3036829/streaming-hardware/the-fcc-wants-to-blow-up-the-cable-box-heres-what-its-proposal-will-and-wont-do.html.

systems. The use of simulcast will take spectrum and network capacity away from other services, either for Broadband Internet Access Services capacity or for more TV channels. This is essentially creating a new MPVD network architecture that constrains the operation of the entire MVPD architecture that exists today and in the future.

Creating that new MPVD network architecture also locks in the use of scarce bandwidth for an FCC mandated approach. MVPD bandwidth capacity is a scare resource. Every MVPD must decide how to optimize their transmissions to conserve bandwidth. In the case of cable operators, they must carefully balance the use of capacity for broadband use and video use. For many operators, analog channels had to be removed from the cable plant to make room for additional bandwidth. Once an MVPD begins to simulcast these three Information Flows, the spectrum and capacity necessary for them will be fixed in its use for the foreseeable future. Since retail devices under the FCC's proposed mandate are dependent on this network capacity, the opportunity to reclaim this bandwidth or evolve the network in other ways will be prohibited, contrary to the stated objective of the NPRM to protect the continued evolution of networks and services.[87]

The FCC NPRM will have the effect of forcing MVPDs to create a new in-home termination device that "translates" its output into the three Information Flows to connect to a new retail box. A two-box in-home solution is inevitable under the FCC NPRM. The two-box solution is the only practical way that such a system could be implemented and deployed across all MVPDs – and even then, it will not avoid all of the constraints on future network innovation detailed above. A new MVPD device will be needed in the home wherever a retail in-home device is needed.

This FCC mandated intermediary device represents a new piece of customer premise equipment that must be developed, tested, and deployed by the MVPD. Regardless of what protocols are chosen for the three Information Flows, these new FCC mandated devices will require new protocols for provisioning and management.

The intermediary device will, of course, not support or replicate existing MVPD services, support regulatory requirements, meet content licensing requirements, or satisfy basic security design. Inserting an intermediary device also leads to further losses of service features. For example, an intermediary device to support the Information Flows breaks Instant Channel Change, as was described in detail in an earlier DSTAC filing.[88]

---

[87] NPRM at ¶32: "Finally, our rules should not prescribe a particular solution that may impede the MVPD industry's technological progress."

[88] "Application-Based Service" Advocates, "Response to Competitive Navigation System Interoperability Additional Material," at 5, August 7, 2015, http://apps.fcc.gov/ecfs/comment/view?id=60001097229: "Instant Channel Change is a feature that can only be implemented in the end client device due to the nature of the video coding and the buffer model used by that system. Implementing ICC solely in the gateway does not provide the ICC experience at the end client device, because the end client device MPEG buffer is always kept full with a number of video frames that haven't been decoded yet (anywhere between 0.5 and 2 seconds of video). These have already been transmitted by the ICC-aware gateway to the client. When a new channel is requested by the client, the *gateway* cannot eliminate the 0.5 to 2 seconds of video that is already in the *client* buffer. This buffer will always result in a 0.5 second or greater channel change latency in a gateway-only implementation and thus not provide an

VII. THE FCC PROPOSAL HAS NOT ACCOUNTED FOR COSTS

The FCC's proposal will require cable operators to modify their headend systems, add to their basic system architecture to support these new requirements, and create new in-home devices to support a third party device or apps. These are fundamental architectural changes requiring significant design, development and implementation, and will result in all customers bearing the costs of these upgrades – regardless of whether they want to own a retail Navigation Device or not. Consumers that do not want such a device will end up bearing the burden of paying for an FCC-mandated architecture that they will never use. The NPRM fails to grasp the scale, time and resources required for the mandate it is considering.

A. DCAS (Downloadable Conditional Access Security)

In order to appreciate the effort MVPDs would be required to expend in order to be able to support the proposed FCC set-top box mandate, it is helpful to consider similarly scoped undertakings. One such project was Charter's recent program to overlay a new downloadable security system ("DCAS") while at the same time continuing to operate its legacy, hardware-based security. Deployment of that new DCAS reflects only one component of the overall effort and complexity likely required to implement the three information flows and Compliant Security System(s) required by the proposed FCC set-top box mandate. To complete that project, Charter had to:

- Build a national data center;
- Develop new interfaces to the billing system;
- Swap out bulk encryptors;
- Modify controllers; and
- Rebuild and switch out all QAMs at every hub in every system, typically in the middle of the night.

In practice, this project easily took twice as long as the FCC proposes for the entire MVPD industry.[89]

B. Case History: The Chip-Enabled Credit-Card Payment System

The NPRM is proposing a massive change to the architecture of the cable operator's system. Other large-scale projects with a nationwide footprint provide a perspective on the time and costs to comply with the FCC's proposed architecture. One such project is the Europay,

---

ICC experience for the end client. The proprietary MediaRoom U-Verse technology overcomes this latency by using a combination of multicast and unicast that terminate in the ICC-aware end client device that manages the video in its hardware buffer."

[89] James Alexander, "Augmenting Traditional Conditional Access with Downloadable CAS, using SimulCrypt," A Technical Paper prepared for the Society of Cable Telecommunications Engineers, Cable-Tec Expo '15.

MasterCard and Visa ("EMV") system to create a chip-enabled standard for credit cards and payment systems.

EMV created a secure, end-to-end network involving nationwide distribution and millions of devices. It required the development of specifications, vendor certifications and end user equipment.

EMV includes an extensive list of specifications that took years to develop. Multiple working groups were created: to develop qualification, accreditation requirements, testing methodology and auditor requirements for a variety of card and mobile systems and equipment; to develop procedures for assuring interoperability and resolving interoperability problems; to address and resolve technical infrastructure issues; and to design and evaluate security and assure annual risk assessment. The specification efforts began in 1994 and continue to evolve to this day.

EMV requires both hardware certification and software certification by a third party accredited testing laboratory. No self-certification allowed. This is significantly more stringent than what the FCC is envisioning in its NPRM.

Security is designed and built-in to the EMV architecture. Included as part of the security certification process is a listing of approved chips vendors, approved platforms for vendors, and approved security evaluation laboratories. Product subsystems cannot be tested separately. For example, the operating system or applications cannot be tested standalone. All subsystems must be tested together as a total system. The vendor must pay for the testing. Security is not discussed in the NPRM. Rather than designing a security-based system, the FCC's proposed architecture is based on the three Information Flows. It allows no contractual relationship with the third party device, and also limits the amount of certification that could take place to a device outside of the end-to-end system solution.

The transition to the chip credit card is expected to cost $8 billion to implement and upgrade to this new technology.

There is a common architectural theme between chip credit cards, cable operator systems, and apps on third party devices such as Roku or Apple TV. The chip credit card architecture is an end-to-end system, similar to existing STB architectures and apps running on third party devices such as Roku. In contrast, the FCC's proposed architecture does not support an end-to-end system.

Just as the cable subscriber's set-top box device (or cable app) must be the terminating and secure system for this overall architecture, the chip credit card and terminal device must also perform this same function in their end-to-end architecture. To achieve this, the terminal devices and chip credit cards in the overall end-to-end architecture must be properly certified to have confidence that a customer's payment will not be compromised.

Prior to the chip credit card, point-of-sale transactions were processed using a magnetic credit card. This card was swiped through a magnetic reader to obtain the account information

of the customer. In essence, the magnetic card is a one-way device, and is not part of the end-to-end trust system. Because of this, it has significant security flaws. To address this problem in today's environment, the entire EMV ecosystem with a chip credit card was created to specifically include the retail terminal and the consumer's chip credit card as part of the end-to-end system. This is a well-known design approach to include security in the design. By incorporating such a design, the chip credit card is now a two-way system, with numerous two-way communications flowing between it and the terminal at various stages of the transaction approval process and with the payment network and the bank. It plays an active role in the security of the system.

In this chip card architecture, the customer card is an integral part of the end-to-end architecture – not simply a device outside the ecosystem getting three information flows sent to it. In existing cable system architectures – whether it be set-top boxes or the apps model running on a third party device, the subscriber facing hardware and software is designed to be an integral part of an end-to-end system. Whether it be STBs, apps on Roku, or a consumer chip credit card, this end-to-end system allows the hardware and software environment of the end device to be well understood. And, as mentioned in the case of a chip credit card, detailed certification at a variety of levels is need for both the card and terminal.

In contrast, the FCC's proposed architecture specifies that service discovery data, entitlement data and content be provided as "information flows" to a third party device. It does not permit an end-to-end ecosystem. The hardware of the third party device is not known, the software environment is not known, communications with the third party device are limited, and the security of the device is well below end-to-end systems. The NPRM proposes to take a two-way end-to-end secure distribution network and take it back to the standard of the one-way magnetic credit card that is being abandoned in order to raise security to modern levels and stem billions of dollars in annual losses to fraud.

C. FCC Proposal Ignores Costs

Consumers will of course be required to continue paying the bill for cable service to the retail box, the lease fee for the new in-home box to serve that retail box, and the higher electrical bills to power that box. But the other costs assigned to MVPDs will inevitably have to be recovered from consumers, whether or not anyone manufacturers retail boxes and whether or not consumers buy them. The NPRM fails to recognize any costs for:

- Developing standards;
- Developing specifications;
- Capital Expenditures ("CapEx"), Operating Expenditures ("OpEx"), and Non-Recurring Engineering Costs ("NRE") associated with system engineering, system testing, and system deployment to support new standardized information flows;
- New product development;

- New product testing and implementation;
- Billing system integration;
- New compliant security system(s);
- Intellectual property rights in rights-expression language, guides, and other patented elements in the "standard;"
- Developing and operating new cybersecurity defenses;
- Moving data across area networks, switches, and routers;
- Training customer service staff;
- Ongoing customer support;
- Ongoing engineering support;
- Ongoing software-maintenance support;
- Wasted bandwidth, such as bandwidth lost to uncontrolled unicast or simulcasted IP multicast;
- Delayed or disallowed customer offerings;
- Delayed or disallowed cloud-based solutions;
- Delayed or disallowed adoption of more advanced audio and video formats, resolutions, encoding, transport, and content formats;
- Delayed or disallowed adoption of next-generation security solution(s);
- Lost advertising revenue;
- Lost programming diversity;
- Delayed, diverted or abandoned development of services, technologies and innovation actually desired by consumers; and
- Promised consumer protections lost.

The Commission has conducted no study of the cost of its proposal.

D. The FCC Proposal Imposes High Costs to Energy Efficiency

To take just one further example of the costs that the FCC has ignored, the NPRM fails to consider its potential impact on overall energy consumption.

In late 2013 MVPDs (Comcast, DIRECTV, DISH Network, Time Warner Cable, AT&T, Verizon, Cox Communications, Charter Communications, Cablevision Systems Corp., Bright House Networks and CenturyLink), equipment manufacturers (Cisco, ARRIS (including Motorola), and EchoStar Technologies), and energy advocates (Natural Resources Defense Council (NRDC), the American Council for an Energy-Efficient Economy (ACEEE), and the Appliance Standards Awareness Project (ASAP)) established a Voluntary Agreement ("VA") to "improve set-top box efficiency by 10 to 45 percent (depending on box type) by 2017, [which is] expected to save more than $1 billion on consumer energy bills annually."[90]

The NPRM, however, makes no reference to the VA – and only once addresses the proposals' potential impact on energy consumption, claiming (without providing any supporting evidence) that granting software developers access to the Information Flows "will ensure that consumers will not be forced to use outdated, power-hungry hardware to receive [MVPD] services."[91] Thus, it is clear that the FCC has not considered the energy consequences of its proposal.

Given the significance of greater energy efficiency to policymakers at both the state and national levels, however, it is important to understand fully the impact that this proposal would have on overall power consumption. As described below, the proposal, if adopted, would represent a clear step backwards with respect to power consumption. MVPDs operating in compliance with the VA already have made significant progress in improving the energy efficiency of existing and new set-top box models: in just its first two years, consumers have saved over $500 million on their energy bills as a direct result of the VA.[92] But if the proposal were to be adopted, MVPDs would be forced to redirect efforts away from energy conservation toward the design, manufacture, and deployment of a new secondary in-home termination device. This would create four major sources of inefficiency: (1) additional, duplicative devices; (2) new, less-efficient devices offered by retail manufacturer who do not build devices governed by the VA; (3) barriers to MVPDs' ongoing migration to a more efficient, apps-based (and potentially boxless) environment; and (4) diversion of resources from ongoing efforts to improve the efficiency of existing devices.

Although the NPRM asserts that the proposal would not require new in-home equipment, substantial network modifications, or duplicative operations, Section VI above demonstrates above that the only practical way MVPDs might achieve compliance is through the development and deployment of a new redundant in-home termination device. The power-related concerns that would arise as a result include:

---

[90] "U.S. Energy Department, Pay-Television Industry and Energy Efficiency Groups Announce Set-Top Box Energy Conservation Agreement; Will Cut Energy Use for 90 Million U.S. Households, Save Consumers Billions," December 23, 2013, http://energy.gov/articles/us-energy-department-pay-television-industry-and-energy-efficiency-groups-announce-set-top.

[91] NPRM at ¶ 30. Commissioner Pai pointed out in his Dissenting Statement that the FCC's CableCARD rules "have increased cable customers' energy consumption by 500 million kilowatt hours each year, enough to power all the homes in Washington, DC for three months."

[92] D+R International, "2014 Annual Report: Voluntary Agreement for Ongoing Improvement to the Energy Efficiency of Set-Top Boxes," http://www.cta.tech/CorporateSite/media/Government-Media/2014-Annual-Report-STB-Voluntary-Agreement.pdf, at 2 ("2014 VA Annual Report").

- **Multiple Devices**: The practical impact of the proposal would be to replace one device with two. All else being equal, one would expect two devices to consume greater electricity than a single set-top box, due to the duplication of various components that could otherwise be shared, the loss of power through AC conversion, and other inevitable redundancies. In addition, while the new in-home termination device would need to perform network-routing functionality to enable the three Information Flows, a separate modem/router still would be required, as current commercial routers used with customers' Internet service are not able to perform all of the proposals new functions.

- **Scale-Related Inefficiencies**: As discussed above, each MVPD likely would have to design, manufacture, and deploy its own in-home termination device; a universal solution does not appear to be feasible as was acknowledged by the DSTAC report. As a consequence, the number of devices manufactured for each MVPD would be low, and one would expect new revisions of hardware – including improvements in power management – to occur relatively infrequently. Moreover, as a new invention with untested functionalities, each MVPDs' in-home termination device likely would be significantly less efficient than existing devices that meet the stringent requirements of the VA. And, given the relatively short amount of time allotted – two years – for compliance, MVPDs and their vendors would be constrained substantially in their ability to optimize the energy efficiency of the first generation of these devices. As a result, their energy usage would be on the high end of cable consumer devices due to all of the required functionalities, which include characteristics of not just set-top boxes, but modems and routers, as well.

- **Barriers to MVPDs' Migration to a More Efficient, App-Based Approach**: MVPDs today are moving to an apps-based environment that will allow them to reduce, and perhaps even one day eliminate, consumer reliance on leased set-top boxes. Indeed, customer usage of MVPD apps already has had an impact on overall power consumption, a development that the VA's Independent Administrator recognized in its most-recent annual report, noting that signatories to the VA "continue to enable their customers to watch video programming without the use of set-top boxes at all."[93] Because the FCC has proposed a so-called "parity" rule that effectively would prevent MVPDs from continuing to deploy apps that do not rely upon the new in-home termination device,[94] the proposal would not only require MVPDs to put a new box into every home that used a new retail device, it also would erect barriers to MVPDs' evolution towards boxless solutions. This drives the industry away from development efforts to serve customers using only their modem and a Smart TV to solutions that require two power-consuming pieces of equipment – a new in-home termination device and a retail device from a third party.

---

[93] 2014 VA Annual Report at 12.

[94] The first proposed "parity" requirement states that "if an MVPD makes its programming available without requiring its own equipment, such as to a tablet or smart TV application, it must make the three Information Flows available to competitive Navigation Devices without the need for MVPD-specific equipment." NPRM at ¶ 63. As discussed above, this would prohibit an MVPD from making a boxless solution available to any one device unless it also makes a boxless solution available for every third-party device or application – a nearly impossible hurdle.

- **Diversion of Engineering Resources**: The proposal would force MVPDs and their vendors to divert substantial engineering assets – personnel as well as technical and financial resources – away from energy conservation and toward compliance with the new Rules. Vendors would be force to redirect efforts currently focused on next-generation, more-efficient set-top boxes, apps, and boxless delivery solutions to invent this new FCC-mandated device, as well as the creation of new back-office infrastructure, in order to support the delivery of the three Information Flows. MVPDs' engineers' efforts and attentions could be consumed for years by participation in multiple standards bodies' efforts to create technical standards that do not currently exist; design, manufacture, testing, and deployment of the new in-home termination device; and other, as-yet-unidentified work necessary to implement the proposal. In addition, technical mandates such as this tend to lock affected entities into relatively less efficient approaches to energy usage. As one example, several years ago cable operators sought to deploy highly efficient Digital Terminal Adapters ("DTAs") in order to facilitate their migration away from power-wasting analog tuners – but because DTAs do not rely upon CableCARDs, cable operators were prevented from doing so by the FCC's Integration Ban. Eventually a waiver was granted and cable operators were able to start deploying DTAs and moving to all-digital networks, but not until after several years of regulation-driven delay.

For purposes of illustration, the potential impact that the proposal would have on power consumption was calculated. Specifically, two calculations were performed. In the first, the amount of energy being used today under MVPDs' market-driven approach was quantified. (The market-driven approach relies upon a mixture of (1) apps delivered directly to Smart TVs, tablets, and other viewing devices; (2) apps delivered to a third-party navigation device (such as a Roku), which allow consumers to access MVPD-delivered video on devices that they already own; and (3) leased set-top boxes.) That total was then compared to the amount of power likely to be used under the proposal using an in-home termination device and a third-party Navigation Device.

The calculation used to evaluate MVPDs' current approach, relied upon the most recent Annual Report of the Independent Administrator of the Voluntary Agreement for Ongoing Improvement to the Energy Efficiency of Set-top Boxes.[95] By simple average, current MVPD solutions use 105 kWh/yr per device.

To measure the effect if devices designed pursuant to the proposal ("FCC Devices") were to replace existing solutions, steps first were taken to account for the need, acknowledged by proponents of the proposal in the DSTAC Working Group 4 Report,[96] for a Tuning Adapter (in addition to the new in-home termination device) for cable systems that have deployed SDV.

---

[95] 2014 VA Annual Report at 12-13.

[96] DSTAC Final Report at 286 (DSTAC WG4 at 151): "The Device Proposal does not even support linear channels within its own terms. It explicitly acknowledges reliance on "prosthetic" auxiliary devices for satellite and IPTV, at the very least – meaning more boxes (and more energy consumption). It also assumes a separable tuning adapter box to support cable SDV, rather than considering an application based approach that has already solved this problem."

This was done by weighting the current solutions by the proportion of homes that use SDV and the distribution across types of set-top boxes currently in use, taken from the most recent STB VA annual report. The total number of MVPD apps downloaded to retail devices (56 million) was then split equally across the two subcategories. If FCC Devices were to displace current MVPD approaches proportionately, the calculated net loss would be over 200 kWh/yr per device.

If one assumes that FCC Devices would enjoy at least the success of the current MVPD app-based approach for iOS and Android devices (56 million downloads), the additional energy utilization across the entire American video viewing footprint would be staggering: 13.42 Terawatts of energy wasted per year, the equivalent to $1.6 billion in increased residential energy bills – over three times more than the gains realized to date under the VA. In terms of environmental impact, this is equivalent to:

- 9 million tons of extra CO2 emissions annually,
- The addition of 4.5 power plants, and
- 2 million more cars on the road.

E. FCC Proposal Increases Costs Further By Isolating the U.S. Cable Industry from Global Development Tools and Community

The FCC's proposed mandate would isolate MVPDs from the apps and HTML5 environment that has been adopted by worldwide TV standards groups, standards groups in the US, Europe, Japan and Korea, and Smart TVs and other CE devices as a platform for TV applications.[97]

This environment has enabled cable operators to emerge from their isolated development environment that had previously handicapped its innovation, and to adopt and deploy agile development platforms using the same development tools, same pool of developers, same content protection techniques and same IP technologies as OVDs. Cable operators' cloud/app/HTML tools and development teams are now orders of magnitude faster, cheaper, and more innovative in upgrading cable service and expanding its reach to more devices.

And because each MVPD potentially would have to design and manufacture its own device, the expected volume-per-device would be low.

VIII. CONCLUSION

This White Paper has demonstrated that the FCC proposal fails to provide MVPDs with the technical means required to present their service to subscribers, to innovate, and to protect

[97] TV standards groups across the globe that have adopted HTML5 apps include: W3C (Worldwide), ATSC 3.0 and DLNA VidiPath (US), HbbTV (Hybrid Broadcast Broadband TV) 2.0 (Europe), MSIP Smart TV 2.0 (Korea), and IPTV Forum Japan Hybridcast (Japan). Smart TV platforms that support HTML5 apps include: Android TV (Sony), Tizen (Samsung), Firefox OS (Panasonic), webOS (LG), and Opera TV.

their networks, services and consumers.

By failing to provide MVPDs with access for their app to create a trusted application execution environment within the retail device, the proposal fails to support interactive features, user authentication, and many other requirements of service.

The proposal provides MVPDs with no technical ability to ensure that third-party devices and apps meet regulatory obligations or the contractual obligations that MVPDs negotiate with content creators and suppliers to obtain the right to distribute programming.

By inserting fixed interfaces into the network, the NPRM compromises the ability of MVPD networks and MVPD services to innovate and to take advantage of technological progress.

By removing essential tools for providing security and cybersecurity best practices, the FCC proposal reduces security and poses a significant risk of compromise, theft of service and device cloning.

As a practical matter, the FCC proposal will require cable operators to create a new in-home termination device for a two-box solution to connect to a new retail box.

The FCC has failed to evaluate the significant design, development and implementation costs it would impose.

Sidney M. Skjei, P.E.

Sidney Skjei is co-founder of Skjei Telecom, an engineering consulting firm now in its 22nd year of service to the satellite communications and broadcasting community. He personally has over 35 years' experience in engineering and developing telecommunications and broadcasting products, systems and services. His consulting assignments have included all aspects of planning, developing and procuring digital television and radio broadcast systems, as well as transmission and distribution via fiber optic, microwave, cable and satellite media. He has assisted television and radio networks, content providers and television stations with a variety of broadcast engineering services, including satellite broadcasting, specification, procurement and transition to a digital television master control and storage area network systems.

He has worked with broadcasting organizations and stations in more than 15 different states of the United States and several foreign countries. He has had multiple assignments as an expert witness and litigation consultant, both in the U.S. and internationally, involving MVPD service. Clients have included the U.S. Government, U.S. and International MVPD service providers and distributors.

PROFESSIONAL EXPERIENCE

Skjei Telecom, Inc.

President 1994 to Present

Co-founded and manage consulting firm providing technical, regulatory and engineering services in the area of digital broadcasting, satellite and broadcast telecommunications systems. Clients have included services, content and product providers, network owners and operators, broadcasters, internet and common carriers and systems integrators.

Experience includes MPEG 2, MPEG 4, H.264, AVC, HEVC and advanced digital encoding methods and systems. Frequently called upon to assess quantitative and qualitative aspects of digital video. Have undertaken numerous assignments in Conditional Access and encryption system design and implementation. Served on industry Working Group defining backhaul transmission of USA ATSC standard digital television via satellite.

GTE Spacenet Corporation

Director of Engineering and Product Development 1993 to 1994

Director of Engineering 1988 to 1993

Director, Satellite Systems Engineering 1985 to 1988

Southern Pacific Satellite Company (SPRINT)

Manager, Systems Engineering	1983 to 1985
COMSAT World Systems Division	1979 to 1983
Manager, Transmission Engineering	
U.S. Navy, Washington, D.C.	1975 to 1978

EDUCATION

MSEE (With Distinction), Communications Engineering, 1975, Naval Postgraduate School, Monterey, California

BS (With Merit), Naval Science, 1967, U.S. Naval Academy, Annapolis, Maryland

AWARDS

IEEE Life Member Award, January 2011

Leslie H. Warner Technical Achievement Award, GTE Corporation, May 1987

AFCEA Outstanding Engineering Graduate Award, June, 1975

LICENSES AND PROFESSIONAL MEMBERSHIPS

Registered Professional Engineer, (PE) Commonwealth of Virginia, United States of America

Eta Kappa Nu, IEEE Life Member, AFCCE Full Member

APPENDIX C

THE SCARY ECONOMICS OF THE NPRM'S NAVIGATION DEVICE RULES

Steven S. Wildman

The Scary Economics of the NPRM's Navigation Device Rules

Steven S. Wildman
Michigan State University* and University of Colorado**

April 18, 2016

* Professor & J.H. Quello Chair of Telecommunication Studies Emeritus and Quello Center Senior Fellow
** Silicon Flatirons Senior Fellow and Interdisciplinary Telecommunications Program Visiting Scholar

Executive Summary

In its February 18, 2016 NPRM, the FCC proposes new rules that are ostensibly intended, like its previous set-top box rules, simply to promote the development of a competitive retail market for the navigation devices (NDs) otherwise known as set-top-boxes. But the FCC's proposal goes well beyond the previous CableCARD approach, which simply sought to create a competitive market for boxes that offered the same navigation capabilities as operator-provided boxes.

The proposed approach appears to enable – and encourage – device suppliers to participate in *additional* markets, such as by allowing them to *repackage* programming offered on MVPD systems (along with other Internet-provided programming) and to sell *advertisers* access to audiences that are currently jointly created by MVPDs and the networks they carry.

The NPRM assumes that consumers would be better served by allowing retail device suppliers to use an MVPD's programming in these new ways, but it does not rigorously examine this assumption. **This paper shows that this assumption is seriously flawed and that the proposed rules, far from promoting a competitive marketplace, are likely to artificially distort competition to the detriment of consumers.**

- The NPRM presumes that the failure of a more extensive retail market for set-top-boxes to develop is evidence of market failure. Economic theory tells us, however, that it is sometimes more efficient – and reflects consumers' preferences – to sell consumers a product system's components as an integrated bundle. That is likely to be the case with respect to set-top boxes.

- To support its contrary assumption that the lack of a retail market for set-top boxes results in anticompetitive pricing that harms consumers, the NPRM points to two deeply flawed and inaccurate studies of set-top-box pricing.

    - One study never had key data needed to calculate the average set-top-box rental rate that it reports. Moreover, when set-top-boxes and video programming service are provided as an integrated bundle, the nominal prices for such boxes – relied upon by the study – have no meaning independent of the prices charged for the programming components.

    - The second study commits five critical errors, including treating a *regulated* rental rate that covered an MVPD's cost for a set-top-box *plus* the costs of servicing, replacing and upgrading the box as needed as if it were a *market-set* retail price *for the box alone*.

- **While there is therefore no basis for the NPRM's presumption that the existing marketplace is harmful to consumers, the marketplace that is likely to emerge from the proposed rules is likely to distort competition in multiple ways that**

promote inferior services and diminish the quantity, quality and diversity of video programming:

- As a general matter, by giving suppliers of navigation devices free access to assets that MVPDs and networks have created at considerable expense, the proposed rules would subvert merit-based competition by allowing new suppliers to offer their devices and other service bundles at prices that would not reflect all the costs incurred in making them available. As a result, efficiency would not be a prerequisite for success in the newly created market and the MVPD industry that emerges under the proposed rules can be expected to deliver less value to consumers and to advertisers than the one we have today.

    - For example, if device suppliers can exploit free access to MVPD programming to sell their own advertising, they can, with this artificial subsidy, supplant MVPDs as suppliers of navigation devices while offering consumers inferior navigation devices and offering advertisers services they value less than those offered by MVPDs and networks.

    - Similarly, if unaffiliated ND suppliers offer MVPD subscribers altered versions of MVPDs' channel lineups, the economics of the programming marketplace would be distorted in a way that would undermine contractual arrangements agreed to by networks and MVPDs and, more importantly, would prevent MVPDs and networks from working out through contract negotiations arrangements that better serve their viewers and advertisers. Because new networks and networks targeting niche and minority audiences are most dependent on favorable channel assignments to find and grow their audiences, they would be hurt most by this development.

    - Also, if unaffiliated ND suppliers exploit their artificially created advantages to sell advertisers access to MVPD audiences, they will divert advertising revenues from networks and MVPDs and, in the long run, networks likely will respond to diminished revenues by producing programming that is both less expensive and less appealing or, in some cases, by simply shutting down, leaving MVPD subscribers with a diminished set of viewing options.

- **Finally, the NPRM ignores developments in the market for video programming that suggest that the types of integrated navigation services the NPRM seeks to promote are emerging on their own, without any of the artificial advantages of the proposed rules**:

    - MVPDs are creating apps that make it possible for subscribers to access their services on IP-based devices such as Roku, Chromecast, Amazon Fire Stick and others.

    - Integrated video search capabilities can be accessed via devices running on iOS9 and Android as well as the Apple TV OS and Amazon's Fire TV. At

least one MVPD has negotiated an arrangement with an IP device supplier that would support searching the MVPD's programming and online content through a common interface.

- The NPRM's rules *would subvert these pro-competitive, market-based developments*, while promoting inefficient substitutes that are less likely to reflect consumer preferences.

Table of Contents

I. Introduction 1

II. Set-Top Box History Is NOT a History of Market Failure 7

III. The NPRM's Rules Would Subvert Merit-Based Competition, Encourage Inefficient Entry and Sustain Inefficient Competitors 20

IV. A Close Look at Two ND-Based Services that Might Emerge Under the NPRM's Rules 23

IV. A. Unaffiliated ND Suppliers Who Sell Advertising Can Destroy Value While Taking Sales From MVPDs That Offer Subscribers Better Navigation Devices and Provide Superior Services to Advertisers 24

IV.B. Value is Also Destroyed When ND-Based Competitors Offer Alternatives to MVPDs' Channel Lineups 31

V. The NPRM's Rules' Pose a Serious Long-Term Threat to the Quality of Video Services 36

VI. The Video Services Market is Already Moving Forward to Develop Integrated Navigation Services Like Those the NPRM Seeks to Promote . 40

VII. Summary and Conclusions 42

The Scary Economics of the NPRM's Navigation Device Rules

Steven S. Wildman
Michigan State University and University of Colorado

I. Introduction

Section 629 of the Communications Act directs the FCC to adopt regulations to assure that the devices used by consumers to "access multichannel video programming and other services offered over multichannel video systems" be competitively supplied by "manufacturers, retailers, and other vendors not affiliated with any multichannel video programming distributor".[1] If adopted, the Rules proposed in the February 18, 2016 NPRM[2] will constitute the basis for the next phase of the Commission's efforts to stimulate significant growth in the retail segment of the market for navigation devices.

While not described as such in the NPRM, the proposed new rules represent a fairly radical departure from the FCC's previous attempts to launch a market for devices that provided navigation services alone. The new rules, by contrast, would respond to the 629 directive by giving independent navigation device (ND) suppliers incentives to participate in additional markets the FCC would essentially create from whole cloth by granting them free access to "three flows of information": (1) service discovery information, which includes a MVPD's channel listings and video-on-demand line up; (2) entitlements information specifying what a device is permitted to do with content; and (3)

[1] 47 USC 629(a)
[2] Notice of Proposed Rulemaking and Memorandum Opinion and Order in the Matter of Expanding Consumers' Video Navigations Choices, MB Docket No. 16-42, and Commercial Availability of Navigation Devices, CS Docket No. 97-80 (Cited Hereafter as NPRM).

the MVPD's video programming.[3] ND suppliers could then use these information flows to create other services that would be delivered in conjunction with their NDs. A market for repackaged versions of MVPDs' channel listings and video-on-demand lineups and a market in which independent device suppliers would sell advertisers access to the audiences jointly created by MVPDs and the networks they carry are two of many possibilities.

Because participation in the new markets would be contingent on either supplying a navigation device (ND) or, if not a device supplier, partnering in some way with a manufacturer to create and supply the type of ND needed,[4] new markets established by the proposed rules would be inextricably linked to the provision of navigation services. The new devices could thus form the foundations for what economists call multisided platforms, "technologies, products or services that create value primarily by enabling direct interactions between two or more customer or participant groups,"[5] making suppliers of such devices, including now MVPDs, participants in a ND-based multisided platform market that itself would be linked in demand to the broader markets for television advertising and MVPD programming services.

Although the multisided appellation is considerably newer, it has been understood since at least 1970 that most media services are multisided platforms competing in multisided markets and that the demand linkages between the different sides of these

---

[3] NPRM, ¶ 2.

[4] Suppose, for example, that a company like Google wanted to utilize its analytics expertise to create new ways to measure television audiences. Rather than go into the business of manufacturing navigation devices itself, it might instead contract with or create a formal partnership with an electronics manufacturer to create and manufacture NDs that could take advantage of its software.

[5] Andrei Hagiu (Winter 2014), "Strategic Decisions for Multisided Platforms," *MIT Sloan Management Review*, 55(2), 71-80, p. 71.

markets lead firms to set prices that in single-sided markets would be viewed as hard to explain anomalies.[6] A flurry of research starting in the mid-1990s has since greatly expanded our understanding of the complexities involved in setting prices for products and services supplied through multisided platforms.[7]

The legal issues associated with creating a multisided platform market to respond to a statute that describes navigation devices as single-sided products that MVPD subscribers need to "access multichannel video programming and other services offered over multichannel video systems" are not addressed in this report. It is clear, however, that the economics of the types of markets that could arise as a response to the proposed rules, whether multisided or not, are fundamentally different from the single-sided device market the FCC attempted to promote with its earlier navigation device initiatives. The implications of these differences and the questions they raise for MVPD policy are neither acknowledged nor addressed in the NPRM. My goal for this report is to identify and address the more important of these questions. The remainder of this report proceeds as follows.

---

[6] See, e.g., J. N. Rosse (1970), "Estimating Cost Function Parameters Without Using Cost Data: Illustrated Methodology, *Econometrica*, 38 (2), 256-275; J. N. Rosse (1979), "The Evolution of One Newspaper Cities," In *Proceedings of the Symposium on Media Concentration, Vol. II*, December 14 and 15, 1978. Washington, D.C.: Federal Trade Commission, 429-471; S. Wildman & B. Owen (1985), "Program Competition and Diversity in the New Video Industry," in E. Noam (ed.), *Video Media Competition: Regulation, Economics, and Technology*, Columbia University Press; B. Owen & S. Wildman (1992), *Video Economics*, Harvard University Press (see Chapter 4).

[7] Particularly influential contributions include M. Armstrong (2005), "Platform Competition in Two-Sided Markets. Mimeo, Nuffield College, Oxford University and G. G. Parker & M. W. Van Alstine (2005), "Two-Sided Network Effects: A Theory of Information Product Design," *Management Science* 51 (10), 1494-1504. An overview including recent thinking on antitrust principles for multisided markets is provided by S. Behringer and L. Fillistrucchi (2015), "Areeda-Turner in Two-Sided Markets," *Review of Industrial Organization*, 46, 287-306.

A considerable leap in logic is required to bridge the gap between the observation that competition makes markets more efficient and the claim that the MVPD industry would be more efficient and serve consumer interests better if there were more unaffiliated suppliers of NDs competing with MVPDs. Markets and vertically integrated firms are just two of many mechanisms that might be employed to coordinate vertically linked activities in market economies and, depending on the circumstances, each can have efficiency advantages over the other. Nevertheless, proponents of the NPRM's rules have pointed to the failure of a vibrant retail market for NDs to develop in the past as evidence this new initiative is needed. Therefore, Section II looks at the history of navigation devices in the United States and asks what this history can teach us that is relevant to the current proceeding. My analysis, which is informed by transaction cost considerations, suggests that MVPDs have historically been the suppliers of nearly all of the NDs acquired by their customers because, in the context of the overall market for MVPD services, this was a more efficient arrangement than having consumers procure these devices at retail themselves.

It is impossible to identify in advance all of the many ways that independent ND suppliers might find to construct business models based on free access to MVPDs' programming and/or channel lineups and pay-per-view listings. Section III offers a close look at the economics of two that have been identified in the public discussion of the rules. Section III.A examines a market for MVPD services in which independent ND suppliers exploit free access to MVPDs' programming to sell advertisers access to MVPDs' networks' audiences. While there is good reason to believe that the quality of MVPD-supplied programming will decline over time if entrants employing this strategy

succeed in diverting advertising revenues from MVPDs and networks, this concern is set aside for a more in-depth treatment in Section IV to focus on other more immediate efficiency concerns. The conclusions that emerge from this analysis are clear and troubling.

(1) The new rules are not needed to stimulate entry by more efficient device suppliers.

(2) Under the NPRM's rules, ND suppliers selling access to MVPD audiences that advertisers value less than access to the same audiences when sold by networks and MVPDS may still profitably enter the market and displace MVPDs and networks as sellers of commercial time.

(3) Under the NPRM's rules, it is possible for a competitor selling a ND consumers consider inferior to the one offered by the MVPD to capture all device sales and earn a positive profit.

(4) Outcomes (1) and (2) can occur simultaneously.

The undesirable outcomes of the second, third and fourth conclusions are possible because new ND suppliers taking advantage of the rules would profit most from strategies that do not internalize the negative effects of their service offerings on other participants in the market, including MVPD subscribers and advertisers, and MVPDs cannot fully internalize the benefits to networks of their competitive responses to the entrants.

That NPRM rules-induced entry by ND suppliers who don't sell advertising can also adversely impact the quality of the services MVPDs can offer their subscribers is shown by the analysis of ND suppliers offering repacked versions of MVPDs' channel lineups presented in Section III.B. The reason is that channel positions determined when networks' and MVPDs' bargain over the terms of their carriage agreements reflect both parties' understanding of the effects of alternative channel assignments on their ability to

serve their viewers and advertisers. By contrast, a ND supplier in the business of offering channel alignments different from those offered by MVPDs would be concerned only with how subscribers respond to its offerings.

Section IV draws on the literature on the effects of market size on investments in media content to look at the likely long-term effects of the proposed rules on the quality, quantity and diversity of the programming MVPDs deliver to their subscribers. While this literature is still relatively small, the conclusion that media production budgets decline and the amount of content supplied falls if the pool of revenue for which producers can compete is reduced is quite clear. Independent ND suppliers who sell access to networks' audiences would reduce networks' advertising revenues and, as this happens, networks can be expected to turn to less expensive fare that most viewers will find less entertaining. If the loss of advertising revenues is large, and tens of billions in advertising revenues are potentially at risk, some networks would simply disappear, while those that remain would provide less expensive, lower quality programs.

Section V shows that the deleterious effects predicted for the applications of the rules examined in Sections III are reflections of the fact that in granting competitive ND suppliers free access to MVPD's programming, channel lineups, and pay-per-view listings, the proposed rules give entrants advantages over incumbents that preclude true merits-based competition while simultaneously undermining incumbents' ability to continue supplying services to viewers and to advertisers that match in quality those they offered in the past. Similar problems can be expected to characterize other ND-based services that might be introduced to take advantage of the rules.

This report's findings and conclusions are summarized briefly in Section VI.

II. Set-Top Box History Is NOT a History of Market Failure

Most of the products and services consumers purchase are either bundles of component products and services or the end products of multi-component production processes. In many cases, it is easy to envision retail markets through which consumers could purchase the components themselves. Sometimes these markets exist, but often they don't. For example, while prepackaged home sound systems are available, components from different manufacturers can be easily combined and consumers are able to choose among different brands for CD players, cassette recorders, radio receivers, speakers, vinyl record players and other sound system components to create self-assembled systems. On the other hand, for PCs and hand-held computers (including smart phones), hardware and operating systems are always sold as bundles.

Automobile tires illustrate yet another way that the markets for a product system's components might be organized. New car buyers nearly always leave the dealer's lot on tires the manufacturer installed at the factory, but over 90 percent shop elsewhere when the factory-installed tires need to be replaced.[8] The American auto market is highly competitive with numerous competing brands and market shares that fluctuate continually as different companies benefit from often temporary advantages over their rivals. The retail market for automobile tires is also competitive. Statistic Brain Research Institute lists 18 tire makers with market shares of one percent or greater with the largest, Goodyear, accounting for only 15.5 percent of the market's $32.1 billion annual retail sales. Independent tire dealers' 61 percent share of the consumer retail tire market dwarfs

[8] Statistic Brain Research Institute, "Car Tire Industry Statistics," http://www.statisticbrain.com/car-tire-industry-statistics/ (Last accessed March 7, 2016)

that of auto dealerships, whose 6.5 percent share ranked fifth among the types of outlets selling directly to consumers.[9]

Installing tires on a car is a simple and low-cost operation. One has to ask, then, why the auto manufacturers and their dealers don't offer new car buyers the same opportunity to choose among competing brands and makes of tires that most take advantage of when it is time to replace their factory-installed tires. If this was beneficial for buyers, we would expect at least one automaker to seize on this strategy to gain an advantage over its rivals, but this has not occurred.

We don't hear a chorus of policy makers and industry critics arguing that the new car market would be more efficient and consumers better served if automakers were required to make it easier for their customers to choose among different tire brands and makes when buying new cars. Nor has the operating system and hardware analogue of this argument been seriously advanced for the markets for personal computing devices. In fact, Apple, which is known for tightly integrated technology platforms that reserve key, vertically-linked platform components exclusively for supply by Apple, was ranked by the Boston Consulting Group as the world's most innovative company in 2015, above competitors like Google and Microsoft whose platforms are considered more open.[10]

If the bundling strategies of auto companies and the world's most innovative consumer products company raise no alarm, why should the fact that the vast majority of MVPD subscribers continue to take the navigation device offered by their MVPDs in

---

[9] Ibid.
[10] Boston Consulting Group, "The Most Innovative Companies: An Interactive Guide," https://www.bcgperspectives.com/content/interactive/innovation_growth_most_innovative_companies_interactive_guide/ (Last accessed March 7, 2016)

addition to making use of new devices for accessing their MVPD service by itself constitute evidence that innovation is being suppressed and a regulatory fix is in order? Shouldn't the quite general claims for the advantages of competitive markets for unbundled components the NPRM offers on behalf of its proposed new rules apply with equal force to the consumer markets for new cars, PCs and hand-held computers, where components-only markets could have developed but didn't? Would anyone seriously argue that all situations where separate markets do not develop for the separable components of a product system should be treated as instances of market failure? If not, why do navigation devices merit special treatment? Clearly an analytical framework is needed to help us distinguish situations where separate retail markets for system components can contribute substantially to industry efficiency from those where this is unlikely to be the case. Unfortunately, this is not the foundation on which the February 18, 2016 NPRM builds its case for the new rules.

Fortunately, the transaction cost branch of economics, which developed as a response to questions of this nature, provides a framework for addressing them. In his seminal1937 article, *The Nature of the Firm*,[11] then future Nobel laureate Ronald Coase asked why markets are employed to coordinate activities between different stages of production for some products and services while for others this task is managed within firms. His answer, which has since been elaborated in a now voluminous transaction costs literature,[12] was that coordination consumes time and other resources and the relative advantages of markets and more hierarchical forms of coordination like firms

[11] R. H. Coase (1937), "The Nature of the Firm," *Economica*, New Series, 4 (16) 386-405.
[12] Other terms, like the new institutionalism and organization theory, are also commonly employed as labels for this literature.

vary among products and with the circumstances under which they are supplied. It is thus a mistake to assume that one of these coordination mechanisms is always better than the other.

This insight is too often overlooked by policymakers, as former FCC Chief Economist Gerald Faulhaber pointed out in his review of the Commission's attempts to create new markets for various of the component products and services that AT&T combined to provide telephone service when it was a regulated monopoly.[13] Deregulation of consumer premises equipment (CPE) is appropriately touted as a successful attempt to create a retail market that had not existed before. But Faulhaber also pointedly observed that "[t]he success of CPE deregulation via an FCC administrative fiat was not to be repeated."[14] There have been failures too, and these Faulhaber attributes to a failure to recognize that, for some pairs of vertically linked products and services, markets are not always the most efficient mechanisms for coordinating their joint supply. Faulhaber examined both successes and failures from a transactions cost perspective and concluded that both could be explained within that framework. I employ the same approach here to ask what might be learned from two episodes in the history of MVPD services in the U.S. during which neither regulations nor raised regulatory eyebrows appeared to have significantly influenced MVPD choices between offering NDs to their customers or relying entirely on retailers to supply NDs instead.

A high level characterization of transaction cost factors weighed in comparing the relative advantages of firms offering integrated bundles of products and services versus

---

[13] Gerald R. Faulhaber (2003), Policy-Induced Competition: The Telecommunications Experiments," *Information Economics and Policy*, 15, 73-97.
[14] Ibid., p. 79.

market supply for the individual components is that markets are likely to be the better choice when they can offer buyers numerous options and suppliers respond to competitive pressures by cutting costs and improving the quality of their products. On the other hand, the likelihood that coordination within firms is more efficient increases as the number of alternative suppliers that can be supported by a market falls, as the cost of finding alternative suppliers and evaluating them and their products rises, and the more a buyer stands to lose should the supplier selected prove unreliable. While theory alone cannot tell us which considerations will dominate in any given real world situation, it can tell us what to look for and it can serve as a framework for understanding why the coordination mechanisms we see employed were selected over other options. For example, low benefits from searching for better options relative to the costs of search constitute a plausible explanation for why new car buyers accept factory-installed tires but several years later purchase their replacements from independent tire retailers. Even if the tires supplied with new cars are not the ones most new car buyers would select if they compared all the tires on the market, as long as automakers install tires that do a fairly good job of meeting the needs of most of their customers, gains from search will be small and the majority of new car buyers will not find it worth their while to look for tires they like better and arrange for their installation.

We can imagine a world in which car buyers have strong preferences among highly differentiated options for tires and automakers are unable to find tires that most consumers find at least satisfactory. In this world, we would expect new car buyers to search for automobiles and tires at the same time. The fact that that is not the world we

observe suggests that there are efficiency advantages to having automakers select the tires installed on new cars.

Similarly, why should we not allow for the possibility that MPVDs do a good enough job selecting the NDs they offer their customers that most of them don't expect to benefit enough from searching among alternative suppliers to make the time and effort required worthwhile? If this were the case, only a small fraction of MVPD customers with more specialized tastes would acquire their NDs from independent suppliers who offer something different than what their MVPD provides. This does not mean, however, that more differentiated NDs from independent suppliers are needed, as the NPRM implies.

Practices adopted during periods when MVPDs were not subject to price controls or other forms of regulatory oversight that might have influenced their navigation device strategies and they would have profited from employing the most efficient mechanism possible for getting NDs to their customers can be interpreted market-based evidence for what actually worked best. Two such episodes are examined here: (1) DBS operators' experiments with alternative commercial arrangements for getting set-top-boxes into the hands of their customers and (2) cable operators' response to the challenge of delivering NDs to their customers during the period beginning with the passage of the 1984 Cable Act, which eliminated federal price controls and equipment mandates for most of them, until price controls were re-imposed under the 1992 Cable Act.[15] The NPRM recounts

[15] Grigorova-Minchev and Hazlett plausibly suggest that cable operators' ND strategies following the elimination of most regulations limiting prices charged for cable services can be viewed as the outcomes of a natural experiment as well. This episode is not considered separately here because cable operators' device procurement strategies may have been influenced by the FCC's ongoing efforts to promote a competitive market in

how, with the exception of encoding rules, the Commission exempted DBS services from the rules established by the *Second Plug and Play Order* because multiple manufacturers' DBS NDs were available through retail outlets, but "in the intervening years … it appears that the market for devices that can access DBS multichannel programming has devolved to one that relies almost exclusively on equipment leased from the DBS provider."[16] During this period, and especially early on, DBS services were striving to win customers and market share from incumbent cable operators. If there were efficiency advantages to relying on retailers to supply navigation devices, they had every reason to promote this solution. Instead they shifted from a strategy of specifying requirements for retail set-top-boxes to supplying the boxes themselves.

The fact that a competitive retail market in NDs did not emerge following passage of the 1984 Cable Act, which, until passage of the 1992 Cable Act, eliminated price controls for most cable operators, is further evidence that few MVPD customers could have benefitted from purchasing their NDs through a competitive retail market had the option to do so been available. The vast majority of cable operators were the sole suppliers of MVPD service in their service areas during this period and the possibility that NDs might serve as gateways to competitive programming alternatives was at best a remote and hypothetical future possibility. Contrary to AT&T's vested interest when it was a rate-of-return regulated monopoly in supplying all consumer premises equipment to keep the associated costs in its rate base, at this time any reduction in the total cost of connecting subscribers to cable programming realized through competitive retail supply

---

NDs. Alitza A. Grigorova-Minchev & Thomas W. Hazlett (2011), "Policy-Induced Competition: The Case of Cable TV Set-Top Boxes," *Minnesota Journal of Law, Science & Technology*, 12(1), 279-311.

[16] NPRM, ¶ 20.

of NDs would have increased cable operators' profits by allowing them to shift the costs of ND supply to retailers and charge more for the programming component of their services. The following example shows why this would have been the case.

For a representative cable operator, let k be the operator's cost for a ND and let K be the per customer average for all other costs. Assume that initially the operator charges its customers a single all-in price of P, but is later asked by the industry regulator to quote separate prices for its ND and the programming component of its service. Let d and p be the ND and programming prices, respectively. Then any of the literally infinite number of combinations of p and d that sum to P would leave the operator's profits unchanged at $P - k - K$ per customer while its customers would still pay the same total amount of P for MVPD service. Clearly neither the MVPD nor its customers would care how P was split between d and p.[17]

This would not be the case if the MVPD's subscribers could acquire NDs from retail establishments for a total cost, including the retail price for the ND and the associated time and travel costs, of z and z was smaller than d. A consumer could then buy a ND from a retailer and save $d - z$. The cable operator's profit-maximizing response depends on whether z is greater than or less than k. If $z < k$ and its subscribers acquire NDs from retailers, the operator benefits because it can increase the price for its programming by as much as $k - z$ and increase its per customer profit by the same amount. On the other hand, if d was initially set higher than z and $z > k$, the MVPD would lose $z - k$ for every ND its subscribers purchased from a retailer. Its optimal

[17] If we assume the MVPD's customers rent their NDs from the MVPD, P, p and d can be thought of as service fees paid monthly and all prices in this example can be interpreted in this way. k and K can be thought of as the ongoing opportunity costs of capital tied up in NDs and other assets.

response then would be to reduce *d* to some value less than *z* so its subscribers would take its device while increasing *p* by an equivalent amount. In this case the MVPD and its subscribers would both be indifferent as to what value between *k* and 0 was selected as the price for the MVPD's ND.

Although it was clearly not the authors' intention, the report on cable set-top box prices released July 31, 2015 by Senators Markey and Blumenthal provides convincing evidence that neither MVPDs and nor consumers view the prices MVPDs list for navigation devices as having meaning independent of what MVPDs charge for the programming components of their services.[18] According to the Senators' report, U.S. MVPD customers pay an average of $7.43 per month for MVPD-supplied NDs and spend over $19.5 billion annually renting them. The report states that these figures are based on pricing information the 10 largest MVPDs provided the senators. Hal Singer helpfully summarizes the pricing information the senators acquired from the MVPDs while pointing out that, because the MVPDs did not provide the numbers of customers paying each of the rental rates they reported, the information needed to calculate an average price was not available to the senators.[19] Listed rental prices for a subscriber's first ND ranged from $0 for AT&T and DISH to $11.99 for Verizon. Most prices quoted for second and subsequent NDs were between $6 and $8.50, but Comcast reported its rental fees were all in the $2.20-$2.50 range. If MVPD customers viewed the ND rental prices quoted by MVPDs as factors to be considered separately from the monthly prices quoted

[18] "Markey, Blumenthal Decry Lack of Choice, Competition in Pay-TV Video Box Marketplace," Press release, July 30, 2015.
[19] H. Singer (February 5, 2016), "The Sketchy Stat Behind the FCC's 'Unlock The Box' Campaign, *Forbes.* Last accessed February 20, 2016 at http://www.forbes.com/sites/halsinger/2016/02/05/the-sketchy-stat-behind-the-fccs-unlock-the-box-campaign/#55e1018d69b8.

for the MVPD's video services when choosing among service providers, ND rental fees should not vary nearly this much.

The notion that there should be a separate retail market for NDs appears to be an unintended byproduct of the way Congress chose to regulate cable prices under the 1992 Cable Act. Congress wanted to reduce the prices consumers paid for programming but was concerned that cable operators would compensate for mandated reductions in programming prices by increasing the prices charged for the set-top boxes cable customers had to have to get service at all. At the same time, Congress did not want cable companies to lose money on the boxes themselves. So a formula for pricing set-top boxes was created to ensure that cable companies earned a fair return on their investments in these devices. Prices for programming and set-top boxes were thus set separately to implement the 1992 Act and the assumption that this arrangement was appropriate was simply replicated in the language of Section 629.

Unfortunately, this mistake is perpetuated in the NPRM and in the Public Knowledge and Cooper (PK&C) report on the history of ND prices from 1994 through 2015 that is cited by many proponents of the new rules as evidence that they address a genuine need.[20] The PK&C study takes as its 1994 price the ND price established by the 1992 Act's formula, but it is a gross error to equate a cable company's cost for procuring the device to the price a market would set for the same item because the costs of market coordination are ignored. Nowhere in this formula are the expenditures competitive

[20] January 20, 2016 letter filed with Marlene H. Dortch, Secretary, Federal Communications Commission by Mark Cooper, Director of Research, Consumer Federation of America and John Bergmayer, Senior Staff Attorney, Public Knowledge.

suppliers would incur for advertising and other types of marketing, wholesaler costs, and retail establishment costs, all of which would be reflected in retail prices.

Overlooked as well are the contribution of the FCC's 1998 rule banning the deployment of set-top boxes with integrated security to the cost of NDs supplied by cable operators[21] and the fact that the price paid to lease a ND cannot be used as a proxy for the cost of the device itself. With the lease comes a guarantee that the MVPD will either repair or replace the device in the event of breakdown and, furthermore, as technology changes the MVPD will assume responsibility for coordinating the replacement of old devices with new ones. These added services are part of the costs MVPDs incur when supplying NDs to their customers.

These errors are compounded by PK&C's use of the statistically unfounded average monthly rental fee of $7.43 reported in the Markey and Blumenthal study as the 2015 price when calculating a rate of inflation for ND prices since 1974 and their comparison of their claimed rate of inflation for set-top-boxes to the average for three consumer products (personal computers, televisions and cell phones) cherry-picked from the vast number that have gone digital during the period they examine. And even one of these was calculated incorrectly. PK&C compare the $950 stand-alone price for a Motorola StarTac cell phone a year after it was introduced to the lower bound price of the $100-$200 range their source listed for a smart phone included as part of a two-year service contract. Had they used instead the range of stand-alone prices given by the same

[21] For the FCC's acknowledgement that the integration ban raised the cost of set-top boxes, see Federal Communications Commission, 47 CFR Parts 15 and 76, CS Docket No. 97-80; PP Docket No. 00-67; FCC 10-181, Implementation of Section 304 of the Telecommunications Act of 1996: Commercial Availability of Navigation Devices; Compatibility Between Cable Systems and Consumer Electronics Equipment.

source, they would have reported that stand-alone prices for smart phones range from $300 to over $500.

To see the impact of cherry-picking the products used to produce this comparison, suppose instead that video game consoles were selected an example of an alternative pricing history for navigation devices. The Atari Jaguar console was introduced in 1993 at a price of $250,[22] while the list price for Microsoft's Xbox One was $499 in 2013 when it was launched.[23] Using these prices, we could say prices for video game consoles doubled over a twenty-year period. Of course none of these real price changes can be meaningfully compared to each other without also accounting for relative changes in quality, and even if this were done we still would not know to what extent key underlying cost factors differed among these products, neither of which are considered in PK&C's already flawed price comparisons.

A study of the pricing history for any product that (1) used as its starting price the regulated rental rate for a system component that comes with a variety of attached services as if it were a market-set retail price for the component the attached services, (2) offers for purposes of comparison the pricing histories for three other products without explaining why these three were selected from among many that might have been used, (3) miscalculates price changes for one of its three selected products, (4) ignores a regulatory change that the regulating agency admits increased the product's cost and (5) used for its end period price the industry average price reported by another study that did

[22] L. Plunkett (December 13, 3013), "36 Years of Console Prices, Adjusted for Inflation," *Kotaku*. Downloaded April 17, 2016 at: http://www.kotaku.com.au/2013/12/36-years-of-console-prices-adjusted-for-inflation/.

[23] T. Warren (June 10, 2013), "Xbox One Launching in November for $499 in 21 Countries, Pre-Orders Start Now," *The Verge*. Downloaded April 17, 2016 at: http://www.theverge.com/2013/6/10/4415186/xbox-one-pricing-release-date.

not have the data required to calculate such an average would not pass muster if turned in as a term paper for an undergraduate economics class. Yet this and the equally flawed Markey-Blumenthal report constitute the only empirical evidence cited by those arguing the NPRM's proposed rules are needed.

The most reasonable interpretation of the history of NDs to date is that the economic case for creating a more substantial retail market for devices that provide only navigation services was never sound. But even if there were a genuine need for a retail market for devices that provide traditional navigation services, this still would not constitute an argument for launching a market for the very different ND-based services that could emerge under the rules. If there is a case to be made for creating such a market, it must reflect an understanding of how this market (or markets) would operate. The next three sections of this report explore the economic implications of creating such a market.

III. The NPRM's Rules Would Subvert Merit-Based Competition, Encourage Inefficient Entry and Sustain Inefficient Competitors

Competition policy and regulatory oversight in the United States have historically been informed by the fundamental principle that as a general matter competition promotes economic efficiency and serves the public interest when it is merit-based, but the benefits traditionally ascribed to competition are unlikely to materialize when some competitors either benefit from artificially created advantages or are hurt by handicaps imposed on them by other agents. For competition to be merit-based, it is necessary that the terms on which sellers offer their products and services to prospective buyers reflect both the benefits buyers might realize from their use and all the costs incurred in bringing those products and services to the market. When these conditions are satisfied, buyers will select those products with the highest benefit to cost ratios and sellers whose products fail to deliver benefits commensurate with their costs will exit the market. On the other hand, when sellers' offers are distorted by artificially created advantages and handicaps, buyers choices will no longer be based on side-by-side comparisons of the best deals competing sellers are capable of providing and efficiency will no longer be a prerequisite for marketplace success.

Application of this principle has important implications for the design and implementation of laws and policies intended to ensure consumers enjoy the benefits ascribed to merits-based competition. One is that neither the mix of competitors nor the value propositions they offer their customers should be influenced by artificially created and selectively applied handicaps or advantages. For antitrust enforcement, this is reflected in efforts to punish and root out predatory strategies designed to limit rivals' ability to vigorously compete for customers. This includes, along with predatory pricing,

various forms of non-price predation such as raising rivals' costs and limiting rivals' ability to profit from the products and services they might offer to prospective customers.[24]

For regulators, application of this requires eschewing regulations that give some competitors artificially created advantages over others. Judged by this standard, the NPRM's rules fail badly. In giving entrants the right to freely use for their own purposes valuable assets created at considerable expense by incumbents, the rules would sever for unaffiliated ND suppliers the link between the full costs of providing their services and the terms sellers offer buyers that is required for buyers choices to be merit-based choices in competitive markets.

If we accept the premise that competition can be assumed to produce efficient outcomes and societal benefits only when it is merit-based, then if the proposed rules are adopted we should expect to see the MVPD industry that emerges deliver less value to consumers and to advertisers than the one we have today. While it is not possible to identify in advance all of the many ways in which unaffiliated ND suppliers might exploit free access to the three information flows to offer new services, we can carefully examine the economics of possibilities that have already been identified to see if and how the broader predictions based on the general understanding of how departures from merit-based comparisons generate inefficient outcomes are likely to be manifested in these specific cases. Two such cases are examined in Section IV of this this report: one where an unaffiliated ND supplier exploits access to a MVPD's programming to sell its own

[24] For one of the more recent overviews of the relevant literature, see D. T. Scheffman and R. S. Higgings (2003), "Twenty Years of Raising Rivals' Costs: History, Assessment and Future," *George Mason Law Review* 12 (2), 371-387.

advertising clients access to the audiences attracted to the programming offered by the MVPD's networks; and one where an unaffiliated ND supplier offers a MVPD's subscribers channel lineups that differ materially from those provided by the MVPD. In both cases the prediction that entrant's exploiting the rules will destroy more value than they create is supported by the analysis.

IV. A Close Look at Two ND-Based Services that Might Emerge Under the NPRM's Rules

As was described in the introduction to this report, under the NPRM's proposed rules navigation devices could become foundations for supplying new types of services that differ considerably from the basic navigation functions performed by NDs in the past. While some device suppliers might focus on services more directly connected to navigation, others could use their devices to create multisided platforms that offer other services in addition to navigation.

It is impossible to predict and list in advance all of the services that independent ND suppliers might offer in conjunction with their devices. All new entrants, however, will be responding to incentives created by the rules and we can look at the policy implications of already identified strategies that new entrants might employ and ask in each case whether these implications are best viewed as specific to these strategies or should be seen as examples of what we can expect from other types of businesses created in response to the rules. This section presents fairly in-depth analyses for two ND-based entry strategies that have already been identified as ways new ND suppliers might respond to the NPRM's rules, one based on a multisided platform and one more tightly focused on navigation, and finds that in both cases that, consistent with broader general principles-based predictions of Section III, the introduction of competitors responding to the incentives created by the NPRM's rules will lead to inefficient outcomes and less value delivered by MVPD services.

Subsection IV.A presents a simple but instructive model of a MVPD competing with an unaffiliated ND supplier that sells advertisers access to the MVPD's networks' audiences. Setting aside for Section V the concern expressed in this report's introduction that the types of entry that could occur in response to the rules would in the long-run lead to a significant reduction in the benefits consumers derive from MVPD-supplied programming, the model is used to examine more immediate efficiency implications of competition from unaffiliated ND suppliers who also sell advertisers access to MVPD audiences. The efficiency implications of competition from unaffiliated ND suppliers using their devices to offer services more closely connected to navigation are examined in Subsection IV.B.

IV. A. Unaffiliated ND Suppliers Who Sell Advertising Can Destroy Value While Taking Sales From MVPDs That Offer Subscribers Better Navigation Devices and Provide Superior Services to Advertisers

Consider a market served by a single MVPD with *n* subscribers that, as part of its service, offers its subscribers a ND priced at *p*.[25] The MVPD's subscribers also have the option of acquiring a ND from a second supplier who, responding to a perceived opportunity created by the NPRM's rules, recently entered the market selling a different brand of ND at price *q*. The ad-supported networks MVPDs carry typically reserve some fraction of the advertising time in their programs for sale by MVPDs and that fraction is

[25] It is simpler to refer to a price, but most MVPD subscribers pay a monthly rental fee for their NDs and *p* can represent a monthly rental fee as well as well as a single one-time payment. Similarly, all other financial variables in this analysis, such as advertising revenues and the total price inclusive of the charge for a ND that a consumer pays for MVPD service, can be thought of as reflecting monthly totals. For *k*, the cost of a ND, this can be thought of a monthly payment that when summed over the life of a ND, with appropriate discounting for payments in future periods would equal the MVPD's cost for acquiring one device.

represented by *ß*. We assume that, as is permitted under the rules, the competing device supplier strips all commercials from the networks' programs and sells the cleared ad time to advertisers,[26] collecting a_c in advertiser payments for each of the MVPD's subscribers who use its device.

Together, the ad time sold by the MVPD and that sold by the networks generate revenue of a_m per subscriber for each of the MVPD's subscribers who use the MVPD's ND. Assuming advertisers pay the same price per subscriber per unit of commercial time for time sold by the MPVD as they pay for time sold by the networks, the networks' and the MVPD's shares of the advertising revenue generated by their ad times sales are $1 - ß$ and *ß*, respectively. The MVPD's subscribers see the two NDs as functionally equivalent and both devices cost k per unit to produce.

Recall from Section II that, absent a competing ND vendor, the MVPD and its customers would be concerned only with P, the sum of the prices listed for its ND and its video service, because the cost of the ND is an unavoidable component of the MVPD's service costs. That is, setting a price of p for the ND is equivalent to setting a price of $P - p$ for the video component of the MVPD's service. So the value selected for p has no bearing on the MVPD's profit or a subscriber's total payment.

[26] For example, in his dissenting statement, Commissioner Pai observed that "nothing in this proposal would prevent a set-top box manufacturer from replacing the commercials in a television show with commercials sold by that manufacturer." NPRM at 62 (Dissenting Statement of Commissioner Pai) Assuming this is the case simplifies the analysis presented here, but the findings would be qualitatively unchanged if a competing device supplier replaced only part of network and MVPD sold ads with its own clients' commercials or if instead it just sold advertisers the opportunity to place ads around network programs or MVPD-supplied information. In the latter case, time sold by networks and MVPDs would generate less revenue due to the extra options offered advertisers and the effect of added commercial clutter on viewers' receptiveness to ads.

When its revenue from selling ad time in network programs is included, the MVPD's per subscriber profit for subscribers who use its ND is $\pi^o = P + ßa_m - k - K$, where, as in Section II, K is the per subscriber value for all costs other than k incurred in providing service. A slight rearrangement of this expression gives us equation (1).

$$\pi^o = P - (k - ßa_m) - K. \qquad (1)$$

Equation (1) describes the MVPD's profit per subscriber in the absence of a competing ND supplier or when the MVPD's subscribers have the option of choosing an unaffiliated supplier's ND, but still select the MVPD's device.

If the MVPD's subscribers choose the competing ND instead, subscribers' payments for its programming service will be its only source of revenue, and if it is to retain all of its current subscriber base, the MVPD can now charge a maximum of P minus q, the price of the competitor's device, for its programming alone. Equation (2) gives the MVPD's per subscriber profit when its subscribers acquire their NDs from the unaffiliated supplier.

$$\pi^u = P - q - K, \qquad (2)$$

Comparing equations (1) and (2), we see that if q is less than $k - ßa_m$, which is the difference between the MVPD's per unit ND cost and its per subscriber earnings from selling ad time, the MVPD's profits are higher if its customers acquire NDs from the unaffiliated supplier. On the other hand, if $q > k - ßa_m$, the MVPD's per subscriber profit will fall by $ßa_m + q - k$ if its subscribers take the competitor's ND. In this case, the MVPD will find it more profitable to undercut the unaffiliated supplier's price so it can continue to sell its own device.

For each MVPD subscriber who purchases its ND, the competing supplier's per device profit, π_c, is $q + a_c - k$, which is equivalent to the right hand side of equation (3).

$$\pi_c = q - (k - a_c) \qquad (3)$$

For the competitor to sell its device and at least break even, there must be a q that is less than $k - ßa_m$ but still satisfies its breakeven constraint of $q \geq a_c - k$. A q that satisfies both of these conditions exists if $(k - ßa_m) > (k - a_c)$, which requires that

$$a_c > ßa_m. \qquad (4)$$

So the MPVD will supply NDs to all of its subscribers if its per subscriber advertising revenue exceeds that for the competing device supplier ($ßa_m > a_c$), while the independent supplier will be able to offer its ND at a lower price and sell to all n MVPD subscribers if its per subscriber ad sales are greater than the MVPD's ($a_c > ßa_m$).Therefore, independent suppliers with devices no better than those offered by the MVPD may be able to displace the MVPD's devices simply because they can sell more of the advertising time in network programs than can the MVPD.

In fact, unaffiliated suppliers' NDs may be able to displace the MVPD's devices even if the ad time they sell is worth less to advertisers than the same time sold by the networks and the MVPD ($a_c < a_m$). For example, if $ß = .25$, an independent ND supplier would displace the MVPD's ND even if advertisers were willing to pay only 26 percent as much for ad time sold by the independent supplier as they would pay for time sold by the MVPD or by a network.

It is also possible for a supplier of navigation devices that contribute less to MVPD subscribers' enjoyment of television than the MVPD's ND to profit from

replacing the MVPD's devices. To see why, assume the competitor's and the MVPD's NDs both cost k per device as before, but the competitor's device contributes Δ less than the MVPD's device to the pleasure a subscriber derives from watching television. Now the price for the competitor's ND must be at least Δ less than the price for the MVPD's device for subscribers to take it over the MVPD's ND, and, because the competitor's ND lowers the amount the MVPD can charge for the video service component of what it offers subscribers by Δ, the MVPD would be willing to sell its ND for as little as $k - \Delta - ßa_m$ to preserve its advertising revenues and to avoid having to lower the price it charges for the video component of its service offerings to compensate for its subscribers' responses to the competitor's lower quality ND. Therefore, the independent ND supplier will be able to profitably set the price for its ND low enough to displace the MVPD's ND if $a_c > ßa_m + \Delta$, or equivalently, if $\Delta < a_c - ßa_m$. In other words, the greater is the difference between a_c and $ßa_m$, the poorer can be the quality of a successful entrant's ND.

Of course the NPRM assumes that entrants' devices will add to viewers' enjoyment; but even if we knew with certainty that all devices introduced by unaffiliated vendors could improve the viewing experience for MVPD subscribers, this still would not constitute a case for the new rules. While an entrant with a device that improved the value of MVPD services to consumers by enough to cover whatever costs were incurred to make the improvements possible would supply all NDs under the proposed rules, it is easy to show that this entrant would also win the ND market without the rules.

Suppose, for example, that a representative MVPD subscriber would be willing to pay as much as $Ø$ to use a competitive supplier's device instead of the MVPD's and the two NDs cost the same to produce. Then if the competitor charges $k + \Omega$ for its device

and $\Omega < \emptyset$, the MVPD can charge $P + \emptyset - \Omega - k$ for its programming service alone if its subscribers purchase the competitor's ND. $\emptyset - \Omega > 0$, so the MVPD will stop selling its ND because its profits are higher than before and the unaffiliated ND supplier will earn a profit of Ω on each device it sells.

We reach the same conclusion if we look carefully at the economics of introducing a ND that increases the amounts advertisers are willing to pay to reach the audiences created by MVPDs and networks. A more advanced ND could do this in either or both of two ways. One would involve combining audience data collected through its devices with new and statistically more sophisticated methods for analyzing audiences to develop a better understanding of the mixes and types of consumers that watch networks' programs. There are a number of well-established firms that collect, analyze and sell information about television audiences to advertisers and the success of a new ND-based service focused on audience analytics would depend on its ability to deliver better analytics than the established audience measurement services provide.[27]

A new ND could also increase the value of MVPD audiences to advertisers by making it possible to identify for advertisers those members of a program's audience likely to be most receptive to its ads and then delivering ads to individual members of the audience that advertisers select. A new ND with this capability could bring to television the type of targeting that has transformed advertising on the internet.[28] Whether through improved analytics or through more accurate targeting, *for a new device to add to the*

[27] A. C. Nielsen and Rentrak are probably the best known commercial suppliers of this type of information about television audiences.

[28] See W. Ma and S. S. Wildman (2016, in press), "Online Advertising Economics," in J. M. Bauer & M. Latzer (eds.), *Handbook on the Economics of the Internet*, Cheltenham, UK: Edward Elgar Publishing, for a discussion of the efficiency advantages of targeted commercials.

total advertising value of the audiences created by the MVPD industry, it must increase the value of television audiences to advertisers by more than any amount by which the costs of developing and producing the new devices exceed the cost of continuing to produce the NDs currently in use.

The creator of a new ND that satisfied this basic efficiency criterion would not need the assist provided by the rules to justify entering the market because it could charge advertisers for the benefits of using its service and use the difference between advertisers' payments and the cost of its ND to offer its ND to the MVPD's subscribers at a price less than *k*, in which case their MVPD would rather see them purchase the new device than its own. Audience measurement companies have always earned their keep by selling information about audiences to the sellers and the buyers of advertising time and the market that coordinates the supply of targeted internet ads also works this way. There is no reason the supplier of a ND used to offer better services to advertisers could not do the same.

The findings from the analysis presented in this subsection can be summarized as follows:

(a) Even if advertisers value television ad time sold by a competing ND supplier less than ad time sold by the MVPD and its networks, under the NPRM's rules the independent supplier will still win the competition for device sales if the value of the portion of network ad time sold by the MVPD is less than what the independent supplier can earn from selling all of the ad time in network programs.

(b) Under the NPRM's rules, it is possible for a competitor selling a device consumers consider inferior to the one offered by the MVPD to capture all device sales and earn a positive profit.

(c) It is possible for (a) and (b) to occur simultaneously.

(d) The new rules are not needed to encourage entry by more efficient device suppliers.

Stated more succinctly, efficient entry will happen without the new rules and they would create a threat of inefficient entry that did not exist before. Consistent with the basic principles-based prediction of inefficiencies and lost value in Section III, unaffiliated ND suppliers exploiting the rules-based advantage of being able to sell advertisers access to the audiences attracted by costly network programming without having to contribute toward the cost of that programming in any way can thrive even while offering viewers and advertisers lower quality services than they would have received from their MVPD.

IV.B. Value is Also Destroyed When ND-Based Competitors Offer Alternatives to MVPDs' Channel Lineups

Partly because MPVDs and networks both manage multisided platforms whose fates are linked to each other's performance and partly because the strategic choices each makes affects the profits of the other, the relationships between networks and MVPDs are complex and multifaceted. This is reflected in the terms of the multiyear carriage agreements that formally establish each party's obligations to the other. Today networks' channel assignments are commonly addressed in these contracts.

It has been speculated that independently supplied NDs could appeal to MVPD subscribers by offering them variations on their MVPDs' channel lineup that are better aligned with their individual viewing interests. Other things equal, the introduction of differentiated products to serve consumers with differentiated tastes is a good thing. But a thorough analysis of the policy implications of the introduction of NDs with differentiated channel lineups requires that we ask whether other things would in fact remain the same. Those other things are examined in this subsection. We begin by

looking at reasons a network's channel position is important enough to networks and to MVPDs to make it worth bargaining over.

Networks care where they are located relative to other networks in a MVPD's channel lineup because viewers, despite the more advanced search capabilities their remotes put at their fingertips, often search for new programs by using the up and down arrow keys on their remotes to check out channels near the one currently playing. For a network, this makes channels near other networks whose viewers are likely to enjoy its programming more valuable because arrow key searching will contribute more to its audience than could be expected from a randomly selected channel assignment. This is especially important to minority and niche networks and to new networks that start out with little name recognition. The greater the likelihood that members of their target audiences will stumble upon them as they navigate by arrow key, the faster they will grow and the better are their chances for building audiences large enough to cover their costs and justify continued carriage by MVPDs. Channels near those occupied by popular networks, like the traditional broadcast networks, whose programs appeal to a broad spectrum of the television audience are also highly desirable because the volume of arrow key traffic is higher in their vicinity and people with more specialized tastes in programs often watch popular general interest programs as well.[29]

Channel assignments matter to MVPDs for at least three reasons. (1) Viewers sometimes use their remotes' arrow keys for search and navigation and MVPDs want to make this simplest of search and navigation strategies more productive to improve

[29] See, e.g., James G. Webster (2005), "Beneath the Veneer of Fragmentation: Television Audience Polarization in a Multichannel World," *Journal of Communication,* 55(2), 366-382.

subscriber satisfaction. (2) New networks are risky investments for MVPDs because the channels they might occupy could be assigned to more proven alternatives. But this risk can be reduced by giving new networks channel positions that increase the likelihood they will be discovered by subscribers who will later come to see them as valuable additions to their MVPD's channel lineup. (3) Channel assignments determined through contract negotiations can reflect the importance of information and knowledge possessed separately by a MVPD and by the networks it carries. This last point is easy to overlook.

In an influential 1945 article,[30] Hayek pointed out that one of the virtues of markets is that they weigh and reflect through comparatively simple indicators, such as prices, the relative importance of information held privately by individual market participants. Consider, as an example, the role information distributed among the diverse players in a product market plays in establishing the product's market price. On the supply side, this price will reflect manufacturers' understanding of their costs for producing the product, retailers' expectations for the costs they will incur displaying the product and handling its sales, and if wholesaling is part of the supply chain, wholesalers' knowledge of what it costs to provide their services. Demand-side contributions to the product's market price will include its many potential buyers' assessments of its use value to them personally and what other items should be ranked above it when deciding what to include among the limited number of purchases their budgets allow.

Similarly, the terms of the carriage agreement negotiated between a network and a MVPD will reflect knowledge each alone possesses. For the network this will include its assessment of its audience's appeal to advertisers, its predictions regarding the types and

[30] F. A. Hayek (1945), "The Use of Scientific Knowledge in Society," *American Economic Review* 35(4), 519-30.

numbers of viewers its programs will attract, and how much it thinks it will have to spend to produce or acquire the programs it needs. For the MVPD, its understanding of the opportunity costs of moving or dropping networks that occupy various channels the network could be assigned, the revenue it thinks it will generate selling its portion of the network's advertising time, and its projections for how different channel assignments might affect how much subscribers are willing to pay for its package of channels as a whole will all influence the positions it takes in negotiations over the network's channel assignment and, in the end, whether it concludes that carrying the network makes sense. For new networks that might be added to the MVPD's channel lineup, the network's and the MVPD's beliefs regarding how large an audience the network might eventually attract, how rapidly its audience will grow and how much a favorable channel assignment can contribute to that growth will be critical considerations influencing whether the MVPD agrees to carry the network and the channel it will be assigned if it secures carriage.

Contrast this picture of how channel positions determined through negotiations over carriage agreements incorporate the negotiating parties' sensitivities to a variety of factors that in the end determine how well subscribers and advertisers are served with the much narrower set of concerns that would be reflected in the strategic choices of a ND supplier whose sales depended solely on offering MVPD subscribers alternative arrangements of their service provider's channel assignments. Because the independent ND supplier and the MVPD's subscribers would take as a given the sets of networks currently carried by their MVPDs, the implications of alternative channel assignments for individual networks' long-run viability would be ignored entirely, as would increases in

the subscription fees that likely would materialize as networks and MVPDs adjusted to diminished earnings on sales of advertising time. [31]

Some networks would be hit harder than others by a shift to NDs whose suppliers profited by catering only to viewer's short-term interests in how their MVPDs' networks were presented. Hurt most would be the networks most dependent on advertising to fund their operations and those for whom arrow key search contributes significantly to audience size. Networks that appeal to fairly narrow subsets of MVPD subscribers, including those targeting minority taste audiences would be among the most vulnerable. The prospects for new networks, especially, could be diminished substantially, because they would be most in need of the favorable channel assignment boost that MVPDs would no longer be able to provide. For MVPD subscribers the implications of MVPDs losing control over their channel lineups would be diminished viewing options as already marginal networks are forced to shut down and a menu of viewing options that becomes increasingly stale as the effects of a lower rate of entry by new networks become more apparent over time.

Again we find, consistent with Section III's predictions of inefficient competitors and lost value, that an unaffiliated ND supplier with no incentive to reflect the full costs of its business strategy will reduce the total value advertisers and consumers can realize from consumption of MVPD-based services.

[31] It is important that policy analysts not lose sight of the fact that viewers may benefit from MVPDs' efforts to find channel assignments that increase the amounts advertisers pay for their networks' audiences. Doing so increases the advertising component of subscribers' contributions to MVPDs' profits, which creates a strong incentive to lower subscription fees to increase the sizes of the audiences that can be sold to advertisers.

V. The NPRM's Rules' Pose a Serious Long-Term Threat to the Quality of Video Services

If the short term implications of the NPRM's proposed rules are scary, the longer term implications are scarier still because we can expect the quality of the programs MVPDs offer their subscribers to decline, and perhaps dramatically, as ND competitors take advantage of their rules-granted free access to programming funded by MVPDs and networks and information on MVPDs' channel lineups to siphon advertising revenue from MVPDs and networks.

The inverse relationship between the quality of television programs and the revenues available to fund them was first identified by Robert Crandall in a 1974 article on the economic feasibility of entry by a fourth nationwide commercial broadcasting network in the United States.[32] Crandall showed that as ABC, CBS, and NBC, the incumbent networks that dominated television entertainment at that time, adjusted their business models to the reality of viewers lost to the new network, they could be expected to spend less on the programs they offered to viewers. The logic behind Crandall's analysis is intuitive. To maximize a program's contribution to its profits, a network should approve incremental increases in its production budget up to the point where the anticipated addition to the program's audience would generate additional revenue just sufficient to compensate for the last small increase in the budget. It follows then that changes in circumstances that make expenditures to increase audiences more or less profitable will be followed by increases or reductions, respectively, in the budgets of the programs carried by commercial video programming services. Hence, Crandall's

[32] R. W. Crandall (1974), "The Economic Case for a Fourth Commercial Television Network," *Public Policy*, 22 (4), 513-536.

prediction that incumbent networks would offer less expensive programs if competition from a new network made it harder to attract audiences.

A little over a decade after Crandall's article, economists studying the international trade in video products employed similar logic to explain the United States' decades long dominance of trade in films and television programs.[33] There is abundant evidence that production budgets for films and television programs increase with the size of their producers' domestic markets. This is what we should expect to see if producers competing for shares of audience respond to the greater commercial potential inherent in a larger domestic market by creating more expensive programs and films. While differences in language and culture are barriers to trade in media products, the increase in audience appeal made possible when producers have larger budgets to work with can help overcome these barriers. As a consequence, on average we would expect countries to be net exporters of video products to countries smaller than themselves and net importers of video products from countries with larger domestic economies than their own. This pattern too is well documented and constitutes persuasive evidence that the relationship between production budgets and the revenue generating opportunities open to suppliers of media content identified by Crandall and in the economic models of media trade can be a powerful force in shaping real world media markets.[34]

---

[33] S. S. Wildman & S. E. Siwek (1988), *International Trade in Films and Television Programs*, Cambridge, MA: Ballinger Publishing Co.; D.Waterman (1988), "World Television Trade: The Economic Effects of Privatization and New Technology," *Telecommunications Policy* 12 (2), 141-151; C. Hoskins & R. Mirus (1988), "Reasons for the US Dominance of the International Trade in Television Programmes," *Media, Culture & Society* 10 (October), 499-504.

[34] For recent reviews of the empirical literature on international media flows see D. Waterman (2005), *Hollywood's Road to Riches*, Cambridge, MA: Harvard University Press; and Steven S. Wildman and Sang Yup Lee (2015), "Economics of Trade in Media

An obvious implication is that if a country's laws and regulations limit the ability of its domestic media to benefit financially from the commercial value inherent in the products and services they create, the quality and variety of media content available to that nation's citizens will also be reduced. This is illustrated by Sang-Woo Lee's finding that during 1970s American movies' share of the Japanese box office began to rise at the same time that Japanese movies' share started to fall. These turns in the fortunes of Japanese and American films in the Japanese movie market coincided with the growing importance of cable networks as an ancillary market for films in the United States, a development precluded by regulations restricting cable operators to retransmission of broadcast signals in Japan.[35] An appreciation of the causal links between programs' appeal to viewers and their production budgets and between production budgets and the revenue opportunities available to content suppliers is therefore critical to a balanced assessment of the likely long-term effects of proposed changes in the laws and regulations that influence the character of competition among the increasingly varied set of enterprises that supply video content today.

As discussed earlier in this report, the NPRM's rules create incentives for entry by ND suppliers employing a variety of strategies that would reduce the ability of MVPDs' and networks' to collect on the commercial potential inherent in the audiences they create. While the significance of what is lost to MVPDs and networks will vary with the strategies employed by unaffiliated ND suppliers taking advantage of the rules-created opportunity to sell advertisers access to MVPD subscribers who purchase their devices,

---

Products," in R. G. Picard & S. S. Wildman (eds.), *Handbook on the Economics of Media*, Cheltenham, UK: Edward Elgar Publishing.

[35] Sang-Woo Lee (2002), "An Economic Analysis of the Movie Industry in Japan," *Journal of Media Economics* 20 (3), 125-139.

the magnitude of what is at stake is quite clear. eMarketer reports that U.S. advertisers spent nearly $67 billion on television advertising in 2015, a number predicted to grow to $70.6 billion by the end of 2016.[36] Given that over 90 percent of U.S. television households rely on an MVPD for television service, this means MVPDs' audiences will account for approximately $63 billion of the projected 2016 total. This is one of the carrots the new rules would dangle before unaffiliated ND suppliers. It is also funding that is at risk for the suppliers and distributors of network television programs.

[36] eMarketer (March 8, 2016), "Digital Ad Spending to Surpass TV Next Year." http://www.emarketer.com/Article/Digital-Ad-Spending-Surpass-TV-Next-Year/1013671. Last accessed on March 23, 2016.

VI. The Video Services Market is Already Moving Forward to Develop Integrated Navigation Services Like Those the NPRM Seeks to Promote

The unintended irony of a NPRM that points to the benefits of competition as justification for its proposed rules when the rules themselves would destroy the basis for the merit-based comparisons required for competitive markets to work their magic is compounded by the fact that the NPRM was introduced at a time when the video services markets' current participants were voluntarily negotiating arrangements that facilitate simultaneous access to online services and MVPD content through a common interface and integrated search across multiple video services, including MVPDs: the types of developments the NPRM says its rules are intended promote.

We see movement in this direction as MVPDs and OVDs create programming apps that can be accessed through a variety of devices, in the ability to use a Roku media player to search Time Warner Cable programming and online content from a common interface and in TiVo's business arrangements with Comcast and with Netflix that in combination allow TiVo customers to search for programs on both services at the same time. Integrated video search capabilities that can now be accessed via devices running on iOS9 and Android as well as the Apple TV OS and Amazon's Fire TV are further steps in this direction.

The key difference between the NPRM's approach and the solutions emerging from within the video marketplace is that progress within marketplace today is occurring organically as market participants explore the implications of new arrangements and negotiate terms for collaboration from which all participating parties can benefit. When all parties still have much to learn, as is the case now, it is should not be a surprise if new

arrangements are introduced at a deliberate pace and in piecemeal fashion as is appropriate when uncertainty is high for all, except, it would seem, the authors of the NPRM. That these market driven arrangements are entered into voluntarily provides some protection against the possibility that value will be destroyed rather created, a sharp contrast with the situation that would be created by the NPRM's rules, where access to critical MVPD assets would be mandated rather than negotiated and theory tells us that new rules-based services are likely to destroy more value than they create.

VII. Summary and Conclusions

This report offers an assessment of the economic case offered by the NPRM for the new rules it would establish to encourage entry by new navigation device suppliers. While the new rules are designed to encourage independent suppliers of navigation devices to use their devices to offer other services that might differ substantially from the types of navigation aids NDs have always provided, the failure of a substantial retail market in NDs to develop in the past has been offered as evidence that the proposed rules address a genuine need. This claim is based on the assumption that consumers would have been better served had there been a more vibrant retail market, but an examination of the history of ND supply from a transaction cost perspective in Section II strongly suggests that MVPD-coordinated supply offered efficiency advantages over market supply that benefited MVPDs and their subscribers and this is the best explanation for why most MVPD customers have taken the NDs offered by their service providers in the past.

The rules would encourage the provision of ND-based service bundles by allowing independent suppliers of NDs to build new services around free access to flows of MVPD information that include a MVPD's programming, its channel lineup and its listing of on-demand-services. Regardless of whether MVPD management of ND procurement was more efficient than market provision in the past, a case for the proposed rules must consider the policy implications of creating a market (or markets) for NDs that are used to supply services built around free access to these information flows in addition to the basic navigation functions they supported in the past. That task is taken up first in Section III where it is shown that, for markets with competitors responding to the

incentives created by the rules, market outcomes would not reflect true merit-based comparisons of competing sellers' offers. As a result, competition in these markets would not generate efficient outcomes and inefficient competitors could thrive as incumbent MVPDs lose customers and money even while offering consumers and advertisers better services that those offered by inefficient unaffiliated ND suppliers with whom they compete.

Section IV presents in-depth analyses of the policy implications of two ND-based entry strategies that have already been identified as ways new ND suppliers might respond to the NPRM's rules. Section IV.A examines the character of competition between an incumbent MVPD and an independent ND supplier selling advertisers access to MVPD audiences. Section IV.B explores the implications of entry by ND-suppliers offering consumers repackaged versions of MVPD's channel lineups. The conclusion in both cases is that the rules would encourage and reward entry by ND competitors offering services inferior to those offered by incumbent MVPDs. Furthermore, it is shown in Section IV.A that efficient entrants offering services highly valued by advertisers and subscribers would not need the asymmetric advantages (relative to incumbents) created by the rules to profitably enter the market.

The analyses presented in Section IV assume that the quality, quantity and variety of programming supplied by MVPDs would not be affected by ND-suppliers bundling additional services with their NDs. This assumption is relaxed in Section V where it is shown that a predicable consequence of allowing independent ND suppliers to exploit free access to MVPD programming to sell advertisers access to MVPD audiences would be the loss of marginal and niche-oriented networks, less frequent entry by new networks

and the provision of lower budget, lower quality programming as MVPDs and networks adjust to the loss of advertising revenue to ND-suppliers exploiting access to MVPDs' programming to sell advertisers access to MVPD subscribers who use their NDs.

The Section IV and V analyses both illustrate the more general expectation that under the NPRM's rules entrants bundling new services with NDs are likely to destroy more value than they create.

Section VI points out that even though the NPRM claims to address a need for services that provide integrated search and discovery across services offered by MVPDs and online video services, the market is already moving forward developing new services that address that need. A key difference between the NPRM's approach and the emerging market-developed solutions is that progress towards this end within the video marketplace today is proceeding organically with a focus on developing collaborative arrangements from which all participating parties can benefit. That these market driven arrangements are entered into voluntarily provides some protection against the possibility that value will be destroyed rather created, a sharp contrast with the situation that would be created by the NPRM's rules, where access to critical MVPD assets would be mandated rather than negotiated and theory tells us that new rules-based services will probably destroy more value than they create.

APPENDIX D

Timeline of Cable Industry Support for CableCARDs

Appendix D

Timeline of Cable Industry Support for CableCARDs

2000

- The cable industry supports FCC's requirement to develop and provide separate security modules.

2002

- Cable operators and major consumer electronics manufacturers negotiate the landmark "plug and play" agreement for UDCPs and submit it to the FCC for implementation, resulting in FCC rules facilitating the development and commercial availability of UDCPs and enabling retail devices to access cable's scrambled services on any system in the country that is subject to the Commission's "plug and play" rules.

2003

- FCC adopts implementing regulations for UDCPs with extensive cable support.
- Cable expands Go2Broadband to cover video. Go2Broadband is a free Internet-based electronic commerce tool that enables CE manufacturers and retailers to identify a customer's local cable operator and services available so they may recommend compatible hardware to the customer.

2004

- CE manufacturers develop one-way "plug and play" products.
- Cable develops and implements consumer education and internal training for "plug and play" UDCPs. Cable and CE create informal troubleshooting mechanisms to effectively handle the field issues that inevitably arise with start-up technologies.
- CableLabs provides free lab time to CE manufacturers for product development. Thirty major manufacturers of digital televisions and related products utilize CableLabs' state-of-the-art testing facilities, including headend equipment, test tools, and personnel to help evaluate and develop their CableCARD-enabled products.
- Cable operators open their own test labs to assist CE manufacturers in the development process. Cable operators provide extensive technical and developmental support to CE manufacturers.

- Fifteen digital television manufacturers are verified under the testing process. (Eventually 29 CE manufacturers have over 600 models of televisions and other video devices certified or verified for use with CableCARD.)
- Cable operators cultivate direct relationships with large and small CE retailers.
- Samsung signs OCAP/tru2way Agreement for bi-directional devices.

2005

- Cable industry works with Microsoft to create CableCARD-enabled connection to personal computers (PCs), called the OpenCable Unidirectional Receiver (OCUR), and approval of associated Digital Rights Management systems for protection and handling of content.
- LG and Panasonic sign OCAP/tru2way Agreement for bi-directional devices.
- Samsung develops bi-directional DTV on which cable app can operate, which gains certification.

2006

- Microsoft CES booth and keynote feature CableCARD-enabled "digital cable ready" personal computers that receive one-way cable programming, including high-definition premium digital cable content without set-tops.
- Working with TiVo and other manufacturers, CableLabs issues Multistream CableCARD (M-CARD) specifications to allow simultaneous recording and viewing of premium cable content from a single CableCARD. Proposed rules are submitted to the FCC. Multistream CableCARD vendors certified.
- UpdateLogic and CableLabs sign agreement to allow UDCPs to be updated via over-the-air digital broadcast television stream.
- Cable industry develops the Java-based tru2way middleware solution to permit portability of interactive applications used on cable systems through a nationwide common software platform. CE industry helps write and rewrite the specification and the test suites to assure their compatibility with CE and multi-function CE devices.
- The cable industry, over a dozen independent CE companies, and more than 50 other equipment, application, and implementation vendors invest years of effort and millions of dollars to develop and improve the tru2way middleware solution, including multi-mode function for CE to present cable content with a CE interface. Later, Intel agrees to put the resulting technology in its system-on-a-chip architecture.

- The tru2way middleware solution becomes an ITU standard. (It is also an SCTE/ANSI standard.)
- Major CE manufacturers sign licenses to implement the tru2way middleware solution.
- LG, Panasonic, and Samsung voice their support for tru2way middleware at CES 2006.
- Samsung announces the deployment of working certified two-way OCAP-based DTVs with Time Warner Cable in a North Carolina test market.
- Panasonic and Samsung each announce the industry's first agreements for the manufacture and deployment of Comcast's new series of tru2way digital cable set-tops.
- Successful tru2way interoperability lab working sessions held with more than fifty companies, including vendors of Headend/Servers, Tools, Applications, Implementations and major content suppliers such as Walt Disney-ABC and Showtime.
- CE manufacturers begin to retreat from manufacturing UDCPs in favor of ClearQAM TVs.

2007

- Cable industry completes work in helping to establish a worldwide patent pool for making tru2way intellectual property available on reasonable and non-discriminatory terms.
- The cable industry redesigns its leased set-top boxes to rely upon CableCARDs.
- TiVo exhibits its TiVo Series 3 HD Digital Media Recorder with dual CableCARDs at Consumer Electronics Show, allowing consumers to watch one program while recording another on a CableCARD-enabled TiVo.
- Cable operators enter into cooperative development agreements with CE manufacturers for the development of advanced retail devices.
- Cable industry works with TiVo to develop and deploy a "tuning adapter" to help TiVo devices built exclusively as "one-way" receivers to operate as "two-way" cable devices for the tuning of SDV-delivered signals.
- LGE develops bi-directional DTV, which gains certification.
- Time Warner Cable creates a dedicated CableCARD Technical Support Desk, staffed 7 days a week, 15 hours per day, with dedicated connections, joint trouble ticketing and weekly support calls with TiVo.

2008

- The cable and consumer electronics industries negotiate the tru2way MOU, enabling consumers to purchase innovative "two-way" digital televisions and other devices that can receive interactive digital and high-definition video services via app without a set-top box. Contract also resolves the complex business terms surrounding the deployment of tru2way, "common reliance," certification, innovation, protection of consumers' experience and investment, content protection, and CableLabs standards setting processes. Signatories include Sony Electronics, Panasonic, Samsung, LG, Funai, Intel, ADB, and Digeo.
- The cable industry creates development tools and support for bringing two-way tru2way DTVs to market. CableLabs provides a free open source tru2way Reference Implementation. Multiple sources provide commercial implementations of tru2way and Software Developers Kits ("SDKs"). CableLabs provides development lab time to almost every manufacturer of "plug and play" TVs.
- Cable operators open their own test labs to assist in the tru2way development process.
- Cable operators purchase software stacks and OEM set-tops from new CE suppliers. Cable industry now buys from growing number of competitive consumer electronics manufacturers, including Pace, Motorola, Cisco, Thomson, Evolution Broadband, Samsung, Panasonic, TiVo, and ARRIS (Moxi).
- Cable operators port interactive applications to the tru2way platform, including multiple guides, multiple VOD applications, switched digital video applications, interactive advertising, Caller-ID on TV, email viewers, on-screen subscriptions, and even the TiVo interface.
- The cable and CE industries conduct regular "tru2way summit" meetings.
- Tru2way TVs launched publicly in retail stores with promotional rebates.
- Free tuning adapters provided by cable operators using switched digital video to users of retail unidirectional CableCARD products to enable one-way devices to communicate with cable network to request switched channels

2009

- Cable operators roll-out tru2way set-top boxes and platform across the industry.
- Manufacturers of tru2way equipment and developers of tru2way applications hold successful "interops" to test new applications and devices on the tru2way platform.

- CableLabs works closely with CE manufacturers to streamline the certification process so that products can get to market as quickly as possible. CableLabs now provides certification testing on-demand every week; development lab time and interoperability events to any interested manufacturer; short-form test certification; and a path to self-certification.
- CableLabs creates a new Founders Advisory Board composed of representatives of the cable television, content, consumer electronics, and information technology industries, with a formal role in requesting a vote on specification changes that raise costs without adequate justification.
- CableLabs technology licenses and processes are reformed pursuant to the tru2way MOU.
- CableLabs invites the addition of new recordable digital outputs and content protection technologies, either through a CableLabs process or directly through motion picture studio agreements, with specific rights to appeal to the FCC.

2010

- Cable industry proposes consumer principles supporting the Commission's goals for retail availability of navigation devices.
- The ten largest traditional cable operators deploy their 20 millionth CableCARD-enabled set-top box.
- tru2way Reference Implementation made available royalty free and open source

2011

- All cable operators offer CableCARD self-installation option to consumers.
- Cable operators offer bring-your-own-box discounts.
- EchoStar vacates "plug and play" as ""unbridled" and cautions FCC that section 629 does not "empower the FCC to take any action it deems useful in its quest to make navigation devices commercially available," but cable operators continue to provide CableCARDs to retail devices.

2014

- TiVo tells the FCC that "Comcast has been the most supportive of enabling innovation in retail set top boxes, thereby allowing consumers to have a robust retail alternative to an operator-leased set top box."

- TiVo applauds Comcast for “continued commitment to CableCARD provisioning and support” and for enabling video on demand on TiVo devices.
- TiVo tells the FCC that “Comcast has again partnered with TiVo to work on a two-way non-CableCARD security solution that will enable retail devices to access the full Comcast lineup of linear and VOD programming, whether QAM- or IP-delivered.”

2015

- As of the repeal of the integration ban in December 2015, the nine largest cable operators had deployed over 55 million CableCARDs as required by FCC. Cable operators continue to support the 621,000 CableCARDs used in retail devices and new installations of CableCARDs.
- Cable operators like Atlantic Broadband, Cable ONE, GCI, Grande, Midcontinent, RCN and Suddenlink continue to buy their set-top boxes from TiVo, and TiVo announces a new partnership with the National Cable Telecommunications Cooperative, which purchases cable equipment on behalf of its more than 700 small cable operator members, which collectively serve 4 million subscribers. Mediacom deploys Pace box with the TiVo interface.
- Sales to cable operators exceed 85% of TiVo’s business.
- Every one of the Top 10 multichannel video providers has built “apps” that deliver their services to millions of customer-owned IP-enabled devices. Time Warner Cable provides subscribers with access to 300 linear channels plus video-on-demand using iOS, Android, Mac/OS X, PC/Windows, Xbox 360, Roku, and Samsung Smart TVs. Comcast offers full cable service on smartphones, tablets, and PCs and Macs in most of the homes in its footprint.

2016

- Comcast working towards offering a self-service tool for CableCARD activation, an option to direct-ship CableCARDs for self-installation, and a single support line for all CableCARD activation, support and billing questions.