Before the
FEDERAL COMMUNICATIONS COMMISSION
Washington, D.C. 20554

In the Matter of	)	
	)	
Authorization of Next Generation TV	)	RM- _____
For Permissive Use as a Television Standard	)	

To: Office of the Secretary

JOINT PETITION FOR RULEMAKING

AMERICA'S PUBLIC TELEVISION STATIONS
AWARN ALLIANCE
CONSUMER TECHNOLOGY ASSOCIATION
NATIONAL ASSOCIATION OF BROADCASTERS

April 13, 2016

EXECUTIVE SUMMARY

The story of television in America is one of continuous evolution, with generational leaps in technology creating transformative new viewing experiences. Each new innovation has yielded a better, more immersive and enjoyable viewing experience for American consumers.

Today, broadcasting continues to see significant changes and improvements in video programming, distribution and consumer receivers. Now, 4K ultra-high definition ("UHD"), not just high-definition programming, is available on a number of platforms. Video programming is also incorporating other improvements, such as more immersive and personalized audio, and high dynamic range video that greatly expands both contrast and color range. To keep pace with these innovations, and to set the stage for additional advances in the future, broadcasters need the option to move forward with a new broadcast television transmission standard, as the Commission envisioned when adopting the current digital standard two decades ago.[1]

The Advanced Television Systems Committee ("ATSC"), through a cooperative effort by over 125 member organizations from the broadcast, consumer electronics, cable, satellite, motion picture, professional broadcast equipment, computer and integrated circuit industries, has developed the ATSC 3.0 television ("Next Generation TV") standard.[1] In this petition, we ask the Commission to allow the next evolutionary leap forward in broadcast television, by permitting broadcasters to use this new transmission standard on a voluntary basis.

The Next Generation TV transmission standard will permit broadcasters to offer innovative technologies and services to the public, including:

- Visually stunning pictures on large-screen televisions with superior reception;
- Broadcast programming with multiple consumer-friendly features, such as interactivity and personalized audio, which exceed those available through the current broadcast standard;
- Access to unlimited viewing of local and national news and the most popular sports and entertainment programming, and trusted educational and children's programming via mobile and handheld devices such as tablets and smartphones;

---

[1] *See Advanced Television Systems and Their Impact Upon the Existing Television Broadcast Service, Fourth Report and Order*, 11 FCC Rcd 17771 (1996) at ¶ 49 ("*Fourth Report and Order*").

[1] *See* ATSC Standard: A/321, System Discovery and Signaling (approved March 23, 2016) (Attachment A hereto).

- Seamless integration of broadcast programming with other Internet Protocol ("IP") services, with the ability to provide state-of-the-art security that content owners depend upon;
- Advanced emergency alert information backed up with live, professional reporters and connecting public safety officials with the public;
- Datacasting that will offer a new broadband data pipe into the home, thereby giving content providers another means for distributing large video and other digital files to consumers, and providing enhanced opportunities for essential public services including education and public safety; and
- The ability to geo-target news, weather, and other programming to better serve the public.

Next Generation TV transmissions will operate within a broadcaster's existing 6 MHz television channel, and be subject to the same radio frequency interference constraints and requirements that apply to the current digital standard. No additional spectrum is required or requested, and Next Generation TV services can be deployed within a station's existing coverage contour without causing interference to current DTV stations.[2]

Next Generation TV is not backward compatible with existing television receivers, just as the current DTV standard was not backward compatible with the previous, analog TV standard. To accomplish a seamless implementation of Next Generation TV without disenfranchising viewers, the industry will deploy this new technology in parallel with the existing digital television standard in a voluntary, market-based manner. Parallel implementation will mean that some broadcasters in each market will deploy Next Generation TV, while others will continue to transmit using the current DTV standard. Broadcasters in each market may agree to simulcast their respective signals so that all viewers will be able to receive programming from their local stations in both the current DTV and Next Generation TV formats, free and over-the-air. Like mobile carriers today, which are free to choose when and how to deploy new standards, broadcasters will have the option of choosing when and whether to enhance their current service by implementing Next Generation TV.

---

[2] *See* Meintel, Sgrignoli, & Wallace, LLC, *A Report To The Federal Communications Commission Regarding Laboratory Testing of Recent Consumer DTV Receivers With Respect To ATSC 1.0 and Next Generation TV DTV Interference* (April 8, 2016) (Attachment B hereto) (the "MSW Report").

To effectuate this plan, petitioners ask the Commission to initiate a rulemaking promptly to consider three key requests:

- First, we ask the Commission to approve the Next Generation TV transmission standard as a new, optional standard for television broadcasting.
- Second, we ask the Commission to approve certain rule changes to permit local simulcasting to enable Next Generation TV to be deployed while ensuring that broadcasts in the current DTV standard remain available to viewers.
- Third, we ask the Commission to specify that Next Generation TV transmission is "television broadcasting" in parity with the current DTV standard, and otherwise to conform Sections 73, 74 and 76 of its rules to permit the deployment of this innovative new standard.

With these changes, broadcasters will have the ability to deploy a new and dramatically improved service to the public without requiring any additional spectrum or government assistance. This enhanced digital IP-based standard will create the bedrock for continuing innovation by the television industry for decades to come. And it will be accomplished in an entirely voluntary manner by the broadcasting and consumer electronics industries working in tandem to extend this new service to broadcasters' communities, without mandatory timelines for either broadcasters or receiver manufacturers to adopt the new standard.

CONTENTS

Page

I. Introduction 1

II. The Next Step Forward in Broadcast Television Technology 4

A. The Benefits of Next Generation Television 4

B. Market and Technology Changes 8

III. Overview of Next Generation TV Standard 10

IV. Proposed Rule Changes 12

A. Rule Changes to Enable Use of Next Generation TV 14

1. Authorization and Interference Protection 14
2. Local Simulcasting 17
3. MVPD Carriage Issues 18

B. Conforming Rule Changes 19

V. Conclusion and Request for Expedited Action 20

Attachment A

ATSC Standard: A/321, System Discovery and Signaling (approved March 23, 2016)

Attachment B

Meintel, Sgrignoli, & Wallace, LLC, *A Report To The Federal Communications Commission Regarding Laboratory Testing of Recent Consumer DTV Receivers With Respect To ATSC 1.0 and ATSC 3.0 DTV Interference* (April 8, 2016)

Attachment C

Proposed Revision of Relevant Parts 73, 74 and 76 to Accomplish Implementation Plan

Before the
FEDERAL COMMUNICATIONS COMMISSION
Washington, D.C. 20554

In the Matter of	)	
	)	
Authorization of Next Generation TV	)	
For Permissive Use as a Television Standard	)	RM- _____
	)	

To: Office of the Secretary

JOINT PETITION FOR RULEMAKING OF AMERICA'S PUBLIC TELEVISION STATIONS, THE AWARN ALLIANCE, THE CONSUMER TECHNOLOGY ASSOCIATION, AND THE NATIONAL ASSOCIATION OF BROADCASTERS

I. Introduction

The broadcast, consumer technology, cable, satellite, motion picture and computer industries are working together through the Advanced Television Systems Committee ("ATSC") to develop next-generation broadcast transmission technology that will offer consumers extraordinary and compelling benefits.[1]

This Petition, filed pursuant to Section 1.401 of the Commission's rules, 47 C.F.R. §1.401, and 47 USC § 157(a), asks the Commission to amend its rules to allow broadcasters to use the signaling portion of the physical layer of the new ATSC 3.0 ("Next Generation TV") broadcast standard, while they continue to deliver current-generation DTV broadcast service to their communities.[2]

---

[1] The ATSC is an international, non-profit organization developing voluntary standards for digital television. The ATSC membership organizations represent the broadcast, broadcast equipment, motion picture, consumer electronics, computer, cable, satellite and semiconductor industries.
[2] Petitioner America's Public Television Stations ("APTS") is a nonprofit membership organization that represents the overwhelming majority of public television stations nationwide.

The video world is being radically reshaped by two factors: Internet Protocol ("IP")-delivered content and mobility. With rich content and close ties to their local communities, broadcasters are well-positioned to serve their viewers in this new world. The current DTV standard, widely acknowledged as the most technologically advanced in the world when its technology was developed in the early 1990s and authorized in 1996, is now decades old. Other transmission media, and broadcasters in other countries, are already starting to provide 4K ultra-high definition ("UHD") programming, high-dynamic range ("HDR") video, immersive audio, and superior mobile broadcasting opportunities. Commission action is needed to enable television broadcasters to continue to serve viewers effectively, compete in the marketplace and innovate by voluntarily utilizing a new transmission standard permitting broadcasters to upgrade to an IP-based transport layer as other industries already have done.

This Petition accordingly asks the Commission to adopt Next Generation TV as an additional broadcast transmission standard. This new standard will make more efficient use of spectrum; allow consumers to enjoy new features and higher quality

---

APTS fosters strong and financially sound noncommercial television and works to ensure member stations' commitment and capacity to perform essential public service missions in education, public safety and civic leadership for the American people.

Petitioner the Advanced Warning and Recovery Network Alliance ("AWARN Alliance") is comprised of media and technology companies dedicated to expanding the capabilities of next-generation digital TV broadcasting to deliver reliable, rich media alerts anywhere, anytime, and to enhance the nation's emergency preparedness for the public and first responders alike.

Petitioner the Consumer Technology Association ("CTA") is the technology trade association representing the $285 billion U.S. consumer electronics industry, with more than 2,000 members. CTA engages in legislative and regulatory advocacy, market research, technical training and education, industry promotion, standards development and the fostering of business and strategic relationships.

Petitioner National Association of Broadcasters ("NAB") is the nonprofit trade association that advocates on behalf of free local radio and television stations and broadcast networks before Congress, the Federal Communications Commission and other federal agencies, and the courts.

picture and sound; enable broadcasters to bring innovative new services and new data pipes into the home and the community; provide more opportunities for mobile reception; and improve reception in marginal areas. On top of this new physical layer standard, IP transport will allow new services and capabilities to be provided to consumers much more rapidly, without any need to change the physical layer itself, and will permit seamless integration with other IP-based services and platforms.

By taking the critical step of adopting rules to permit this new standard and other conforming rule changes, the Commission will not only promote more efficient use of spectrum to the benefit of the viewing public, but it will also set the stage for a market-driven adoption of Next Generation TV.

Specifically, this Petition asks the Commission to give broadcasters an option, not a mandate, to use the new transmission standard, so that broadcasters, consumers and the market will determine the pace of deployment. The Petition does not ask the Commission to give broadcasters additional spectrum to roll out Next Generation TV and does not seek any changes to the current DTV standard. Instead, broadcasters will use market-based solutions to introduce this enhanced capability on existing spectrum while not disenfranchising viewers using ATSC 1.0 equipment, and consumer electronics manufacturers will implement the new standard in response to market demands rather than regulatory mandates. With the ability to launch Next Generation TV in parallel with their existing DTV signal, broadcasters will be able to give consumers and communities more of what they want in the form of enhanced services and capabilities. Permitting the broadcast industry to evolve, innovate, compete and serve consumers more effectively

fulfills the FCC's mandate under the Communications Act to "encourage the larger and more effective use of radio in the public interest."[3]

II. The Next Step Forward in Broadcast Television Technology

A. The Benefits of Next Generation Television

The story of television in America is one of continuous evolution, marked by steady progress as well as generational leaps in technology that create transformative new viewing experiences. Each new technological leap has yielded a better, more immersive and enjoyable viewing experience for American consumers. The Commission now has the opportunity to facilitate the next step forward, to unleash broadcaster innovation, and to reach an unprecedented level of viewer engagement, information, entertainment and community service.

Next Generation TV will support video resolutions far beyond HD to home and mobile screens. It will support other improvements as well, including higher frame rates, wider color gamut and high dynamic range video that dramatically expands contrast. Not only will Next Generation TV allow 4K transmissions, but it also will set the stage for future enhancements, possibly including virtual reality views, the use of High Frame Rates for smoother rendition of fast motion, higher resolution transmissions and other advances if and when the marketplace drives them, without any need for additional regulatory action to permit such innovations. Along with higher resolution and better picture quality, Next Generation TV will support a deeply immersive audio experience

[3] 47 U.S.C. § 303(g); *see also* 47 U.S.C. § 151.

with accurate sound localization, customizable sound mixes, and a greater sense of spatial sound envelopment.

Beyond dramatically improved picture and sound, Next Generation TV will support the ability to offer multiple views associated with the same program, displayed on a single or multiple screens. For example, users could experience a panoramic view of sports programs, with multiple views of an event integrated in a seamless fashion, and the ability to pan, zoom or select individual views from different camera angles.

This new standard will enable life-saving advancements in emergency alerting, which could include:

- Signaling that permits receivers to alert consumers of an emergency even when the receiver is powered off. This functionality can be used to cause the receiver to "wake up" to process emergency alert information – an invaluable advance, particularly in areas prone to tornadoes, earthquakes and other sudden disasters (in addition to man-made emergencies);
- Localization filtering of emergency alerts to tailor information for specific geographic areas; and
- Enhanced datacasting to serve law enforcement, first responder and emergency management organizations more efficiently, including the transmission of targeted video files, and to link them with the public more effectively.

Further, Next Generation TV could allow an unprecedented level of viewer personalization and interactivity. Users could access related secondary content – such as extra information (player statistics, product information, in-depth news), alternate

versions of the primary content, user-generated content and interactive content – with the ability to set and retain viewer preferences.

Finally, Next Generation TV will allow dramatic improvements in the robustness of over-the-air signals, enabling improved reception and enhanced mobile broadcasting capability. With increasing numbers of American households relying, in whole or in part, on over-the-air broadcasting to receive television programming, more robust reception will heighten the ability of the public to receive high-quality entertainment, educational and news programming and potentially life-saving emergency and weather broadcasts. Mobility, too, will greatly enhance the ability of the public to receive popular programming on the go, as well as expanding the reach of news, emergency and weather broadcasts.

The Commission in fact envisioned this day when it mandated the existing DTV standard. In adopting the current standard two decades ago, the FCC recognized that a mandatory standard would need periodic reviews, lest the regulated technical standard serve to deter innovation. The Commission noted that the ATSC had "committed to continue to review the ATSC DTV Standard and to implement compatible extensions of, and deviations from, the ATSC DTV Standard that evolve in the future."[4]

Adopting updates to the current DTV standard in 2002, the FCC acknowledged the public interest benefits of expeditiously approving technical improvements incorporated into standards that have been vetted through the ATSC process:

> Updating the rules to reflect improvements in the standard will benefit both the public and broadcasters by allowing broadcasters to make

---

[4] *Advanced Television Systems and Their Impact Upon the Existing Television Broadcast Service*, Fourth Report and Order, 11 FCC Rcd 17771 (1996) at ¶ 49 ("*Fourth Report and Order"*).

> technical improvements in their service that will enhance the quality of DTV services they provide. As ATSC and others point out, the revisions in the new version of the ATSC DTV Standard were developed through careful consideration and deliberation within the technical committees of the ATSC and thus reflect a consensus agreement based on the inputs and viewpoints of all interested parties in all segments of the industry.[5]

In the same order, the Commission encouraged the ATSC to continue pursuing improvements, accorded significant weight to the ATSC imprimatur on new technology, and committed to work quickly to incorporate new ATSC standards through the rulemaking process:

> We also acknowledge the likelihood that there will be further improvements made to the DTV standards over time and indeed, encourage ATSC and other interested parties to continue their work and efforts in these areas. ***In this regard, we reaffirm our intention to give significant weight to proposed changes that reflect the kind of broad industry consensus developed through ATSC's standards-making procedures. While it will be necessary to conduct rulemaking activity to incorporate such changes in the rules, we nonetheless will endeavor to pursue such rulemaking as quickly as possible.*** [6]

The ATSC has pursued exactly the improvements encouraged by the Commission. Developed over the last several years and groundbreaking in its capabilities even by the standards of the world's most advanced digital radio communications systems, the new technologies embodied in Next Generation TV can transform the television experience for consumers, while vastly improving spectrum efficiency in the broadcast television bands.

The current DTV standard was revolutionary in the mid-1990s, when the U.S. became the first country to adopt and deploy a high-definition digital television broadcast

---

[5] S*econd Report and Order and Second Memorandum Opinion and Order* in MM Docket No. 00-39, 17 FCC Rcd 15978 (2002) at ¶ 50 ("*Second Conversion R&O")*.

[6] *Id.* at ¶ 51 (emphasis added).

standard. Broadcasters seek the ability to use a new, complementary standard to serve the public's needs in 2016 and beyond.[7] An additional broadcast standard will permit broadcasters to continue to serve the major policy goals the FCC established for digital broadcasting and allow the United States to regain its position as the world leader in digital television technology.

Timely action on this petition will enable those broadcasters choosing to voluntarily deploy Next Generation TV to bring new services to the viewing public as quickly as possible. We request that the Commission act expeditiously to provide broadcasters with the option to enhance their offerings for the benefit of consumers and competition in the video marketplace.

B. Market and Technology Changes

When the FCC adopted the existing ATSC standard in 1996, out-of-home television viewing was insignificant. Apart from DIRECTV and DISH, which had recently launched satellite service, digital video was not widely available, and high definition video content was not available to viewers. At that time, MPEG-2 was the "new," soon-to-become nearly universal compression standard for digital video. Mobile digital video had not yet been invented. DVDs had only recently been introduced, and the first portable DVD players would not be sold until 1998. Most Americans still lacked Internet access at home, and those who had it relied on dial-up modems connected to analog "plain old telephone service" lines. The services consumers accessed via IP at

[7] In this Petition we refer to ATSC A/53 as the current DTV standard.

home traveled over those slow, occasional connections. There was no mobile Internet access or any kind of universal Internet video.

Since adoption of the original ATSC DTV standard, the changes in the video and Internet ecosystem are staggering:

- High definition video has become the baseline, and higher resolutions are becoming the norm;
- Progressive scan display formats have become ubiquitous with the adoption of flat displays on virtually all television, computer and mobile devices;
- Major improvements in video coding now allow demonstrably better pictures at the same or lower bit rates;
- Different technologies and techniques – from UHD to HDR, from HFR (High Frame Rates) to WCG (Wide Color Gamut) and higher bit depth – offer consumers a superior viewing experience;
- Next Generation Audio has become more immersive;
- Consumers expect personalization and interactivity as part of the video experience;
- Delivery paths other than broadcast have become commonplace;
- Internet access speeds have increased nearly a thousand-fold, from 19.2 kbps dial-up modems to today's high-speed broadband services
- Computation power has increased nearly a thousand-fold, with today's PCs and mobile devices easily performing video and audio decoding and processing that was previously inconceivable;
- Web pages and Apps provide consumers with personalized and interactive experiences associated with the video streams that they consume via the internet; and
- Video programming is routinely viewed on devices that are not considered to be television sets and are not bound to fixed locations.

These developments, taken collectively, have reshaped the video viewing landscape. Today, the core communications services Americans rely on are IP-based, or are transitioning rapidly to IP. People expect digital services to be easy to use, to

conform to their particular needs, and to improve over time. Next Generation TV directly responds to these and other changes.[8] Much as the evolution from dial-up Internet service to broadband, and wireless upgrades to 3G, 4G and LTE (and soon 5G) dramatically improved the consumer experience, Next Generation TV gives broadcasters a revolutionary new tool to serve the public. It will allow television broadcasters to meet viewers' demands for how they consume video content today and to evolve to keep pace with how viewers will consume digital content in the future.

Most consumer electronics devices with video screens manufactured today are IP-based. Commission approval of IP-based Next Generation TV will enable the current and future generations of IP-based devices to receive broadcast signals. When Next Generation TV transmissions become available, the high-value, free local broadcast programming offered by diverse broadcasters across the country will spur consumer demand for Next Generation TV-capable devices.

III. Overview of Next Generation TV Standard

The Next Generation TV standard consists of three "layers." Each layer itself will incorporate multiple standards. The entire suite of standards will be organized into a "parent" standard, for convenience referred to herein as "ATSC 3.0" or "Next Generation TV."[9]

---

[8] *See* Rich Chernock, ATSC TG3 Chairman, *Next Generation TV: Where We Stand*, (http://atsc.org/newsletter/atsc-3-0-where-we-stand).

[9] Rich Chernock, ATSC TG3 Chairman, *Next Generation TV: What will the "standard" look like?* (http://atsc.org/newsletter/atsc-3-0-what-will-the-standard-look-like/).

The ***physical layer*** is the foundational layer. It defines the core transmission system. The operationally significant System Discovery and Signaling portion (A/321 part 1) was unanimously approved as a Standard on March 23, 2016.[10]

The physical layer specifies Orthogonal Frequency Division Multiplexing (OFDM), an efficient, flexible, and robust scheme, as well as Layered Division Multiplexing that combines two data streams at different power levels with independent modulation and channel coding configurations in one RF channel. Broadcasters deploying Next Generation TV will have the flexibility to choose operating points that support their operating environments and evolving business models. For example, a broadcaster could provide UHD service to fixed locations while simultaneously providing robust mobile services.[11]

The ***management and protocols layer*** connects the physical layer with the presentation layer. It supports service delivery and synchronization, service announcement and personalization, and interactive services and companion-screen services.

The Next Generation TV management and protocols layer specifies IP transport for delivery of streaming broadcast video, audio and file content. The use of IP transport permits next generation broadcast services to be fully integrated with Internet data and

---

[10] *See* ATSC Standard: A/321, System Discovery and Signaling, (Attachment A), also available at http://atsc.org/wp-content/uploads/2016/03/A321-2016-System-Discovery-and-Signaling.pdf.

[11] *See* Deborah McAdams, *Next Generation TV: Mark Richer Details Phys Layer CS*, TV Technology (October 7, 2015) (http://www.tvtechnology.com/news/0002/atsc-30-mark-richer-details-phys-layer-cs/277129); *see also*, Rich Chernock, ATSC TG3 Chairman, *ATSC 3.0: What Will the Next Standard Look Like?* (http://atsc.org/newsletter/atsc-3-0-what-will-the-standard-look-like/).

services, and vice versa. The use of IP also enables "localization" and personalization of broadcast services and adaptability (such as hybrid operations using both over the air and Internet-delivered content components).

The ***applications and presentation layer*** defines the elements that the viewer experiences, including efficient and evolving video and audio coding schemes, and the run-time environment for interactive applications. The service model for Next Generation TV allows for flexibility to allow broadcasters to evolve their operations and businesses with more complex services over time.

IV. Proposed Rule Changes

In adopting the current DTV standard, the Commission considered the tradeoffs between an open market, a voluntary standard, and a mandatory standard. Assessing the various network, startup, and splintering effects of new technology,[12] the Commission ultimately adopted and permitted use of the new digital standard, mandating some elements of the standard and making others optional. Significantly, in adopting the current DTV standard, the Commission made a deliberate decision to allow use of the old analog standard in parallel with the new standard. The Commission's adoption of DTV gave the television ecosystem the confidence to invest in the new technology while still operating the older standard. A similar framework is appropriate here.

---

[12] *See Fourth Report and Order* at ¶ 8 ("Startup refers to the situation where everyone would be better off adopting DTV technology but no one has the incentive to move first. Coordination is the collaborative effort by broadcasters, consumer equipment manufacturers, and program producers that is necessary to introduce DTV. Splintering refers to the breakdown of the consensus or agreement to use the DTV Standard.")

Most of the Commission's rules and policies regulating television broadcasting need not be changed to facilitate the introduction of Next Generation TV. For example, we believe that the Commission's current receiver mandates adopted pursuant to the All-Channel Receiver Act of 1962 need not be changed or extended to Next Generation TV.[13] Instead, a market-driven approach will ensure that both broadcasters and receiver manufacturers adopt the new transmission standard in response to consumer demand. The Commission's policy requiring that essential intellectual property for FCC-authorized standards be made available on reasonable and nondiscriminatory terms applies equally to Next Generation TV as to the existing standard.[14] No changes are necessary in the Commission's programming-related policies and rules, as those requirements will attach to television licensees regardless of the authorized standard they use to transmit programming to their communities of license. Television licensees implementing Next Generation TV remain simply television broadcasters subject to the Commission's existing regulatory structure.

In this Petition, we ask the FCC to act expeditiously to:

---

[13] *See* 47 U.S.C. 303(s). That Act provides the Commission with the "authority to require" that television sets "be capable of adequately receiving all frequencies" allocated by the FCC for "television broadcasting," but the Act does not require the Commission to do so. In 2002, the FCC issued a phased-in requirement that all tuners receive DTV signals to facilitate the first digital transition. *See* 47 C.F.R. §§ 15.117(a), (h), and (i). Because DTV broadcasting using the current standard will continue for some years, we believe it would be premature to consider eliminating the current requirement that television sets have a current-generation digital tuner, and therefore, new Next-Generation capable television sets would also have a current-generation digital tuner for the foreseeable future. However, the evolution of the Next Generation TV market should be market-driven and based upon voluntary standards with consumer adoption under a market-based approach.

[14] *See Fourth Report and Order* at ¶¶ 54-55.

- Allow transmission using the Next Generation TV standard as enabled by A/321 – the System Discovery and Signaling Standard ("SDSS") – when equipment is available and as it evolves;
- Establish baseline requirements for broadcasters who voluntarily implement the additional standard, including measures to provide continuity of service to viewers; and
- Make conforming changes to other FCC rules as necessary.

It is also important to emphasize what this Petition does ***not*** ask the Commission to do. Critically, the Commission should not mandate that all broadcasters deploy Next Generation TV or any of its future evolutions on any particular timeframe. The Commission also:

- Need not modify the DTV emission mask or other spectral emission criteria applicable to broadcast DTV signals;
- Need not assign companion or transition channels to licensees;
- Need not mandate Next Generation TV tuners in receivers;
- Need not subsidize converter devices or adapters, or suggest that any other branch of the federal government do so; and
- Need not make changes, other than minor conforming changes, to broadcast service and operational rules.

No transition channels will be assigned, no changes to the table of allotments are needed, and no broadcaster will have to elect a channel assignment. For many broadcasters, the upgrade to their transmission facilities may be as simple as installing a new exciter.

A. Rule Changes to Enable Use of Next Generation TV

1. Authorization and Interference Protection

The Commission should approve the Next Generation TV standard as an optional standard that can be adopted by television licensees. In particular, the Commission should approve the SDSS portion of the physical layer (see Attachment A).

As the SDSS portion of the physical layer points to the RF characteristics of the standard, which determines interference and coverage, it is also the only aspect that the Commission need approve in order to assure a stable and predictable RF operating environment.

The Next Generation TV standard has been developed to permit stations to replicate their service areas, providing robust, advanced broadcasting, while meeting the constraints of the existing Table of Allotments and FCC Planning Factors. Testing to date has confirmed that the essential transmission aspects of Next Generation TV are fully compatible with the Table of Allotments. Specifically, the attached report by Meintel, Sgrignoli, & Wallace LLC found:

- Next Generation TV interferers exhibit essentially the same interference ratios as current DTV interferers;
- The RF emission mask will remain unchanged, since that serves to limit adjacent channel interference;
- Existing effective radiated power limits for stations may be retained to maintain protections for co-channel and adjacent channel interference;
- Existing FCC Planning Factors can be utilized to evaluate interference from Next Generation TV transmitter to current DTV receivers;
- Next Generation TV transmission may be added using the same interference evaluation techniques as are used today; and
- No changes to OET-69 and Planning Factors are needed.[15]

Because the interference characteristics of Next Generation TV are essentially identical to those of the current DTV standard, permitting introduction of Next Generation TV stations in the existing television ecosystem will be straightforward. The SDSS portion of the physical layer of the Next Generation TV standard has been

[15] *See* MSW Report (Attachment B).

designed to be consistent with the assumptions undergirding the allocation table today, as specified in 47 C.F.R. § 73.623(c)(2), meaning it will also be consistent with any future changes to the table based on the same Commission Planning Factors, including modifications to the allocation table made to accommodate post-incentive auction repacking. Under Section 73.1695 of the FCC's Rules, a new transmission standard may be approved based on its effects on existing transmissions and a demonstration that the public interest would be served. We propose that the existing rules regarding the current DTV standard remain unchanged, with a new subsection added to Section 73.682 of the Rules to permit optional implementation of Next Generation TV. As amended, Section 73.682 should incorporate the SDSS portion of the physical layer of the standard by reference and permit television broadcasters to operate consistent with either the current DTV standard or the Next Generation TV standard.[16] This approach of adopting the core elements of a standard while allowing for innovation is consistent with licensing for other radio services that permit, for example, evolution in mobile phone designs and transmission requirements and evolution in Direct Broadcast Satellite receivers and transmission signals without FCC approval.

A station using Next Generation TV must not cause predicted interference to any television station operating on the old or new standard above and beyond the

[16] Congress has authorized incorporation by reference in federal rules and has authorized the Director of the Federal Register to determine whether a proposed incorporation by reference serves the public interest. *See* 5 U.S.C. § 552(a) and 1 CFR part 51. The FCC previously has used the incorporation by reference process to incorporate the existing ATSC standards in its rules. *See, e.g.*, 47 CFR §73.8000. Although material must have been published in order to be eligible to be incorporated by reference (*See* 1 CFR §51.7(2)(i)), the FCC may announce its intention to submit the final standards to the Director of the Federal Register for approval and incorporation by reference once those standards have been published.

interference predicted by DTV-into-DTV broadcasts. Testing based on waveforms enabled and currently defined confirms that Next Generation TV transmissions do not increase interference into DTV facilities.[17] Accordingly, the Commission's Rules relating to interference protection should be amended to apply equally to both Next Generation TV and to current DTV operation.

2. Local Simulcasting

The core of the voluntary, market-driven implementation of ATSC 3.0 will be local simulcasting. Under this plan, each television broadcaster choosing to implement Next Generation TV will arrange to continue to broadcast in the current DTV standard so that viewers will not be disenfranchised. This plan requires one minor change to the Commission's Rules.

Under Section 73.624(b) of the Commission's Rules, each television licensee must broadcast one free-to-air DTV signal in at least standard-definition quality. The Commission should specify that this requirement may be accomplished by stations deploying Next Generation TV by (a) broadcasting at least one free-to-air Next Generation TV signal and (b) arranging for the simulcast of that signal in the current DTV standard on another broadcast facility serving a substantially similar community of license.

Stations electing to deploy Next Generation TV will enter into market-by-market deployment plans that will rely on local simulcasting agreements to ensure the ongoing availability of programming in the current DTV format. Specifically, a temporary "host"

---

[17] *See* MSW Report, Attachment B.

broadcaster would agree to carry on its DTV subchannels the programming of those stations broadcasting with the Next Generation TV format. The "host" station's programming would be carried reciprocally as a programming stream on one of the stations deploying the Next Generation TV standard. Local simulcasting will permit uninterrupted service to continue as the American public embraces Next Generation TV reception equipment, and will permit this innovative new standard to be implemented without necessitating new simulcast channels from the Commission. These agreements would be subject to the Commission's existing rules and policies as to licensee responsibility and control.

3. MVPD Carriage Issues

Over-the-air television is only one of the ways in which the American public receives television programming. In addition to protecting over-the-air viewers, the Commission must also consider viewers who receive television services from multichannel video programming distributors ("MVPDs"). Because broadcasters voluntarily electing to move to the new standard will continue to deliver programming streams to MVPDs in the current standard, or under alternative arrangements such as fiber optic feeds, there should be no new operational burdens imposed on MVPDs.

Authorization for Carriage. First, the Commission should confirm that a station deploying Next Generation TV should be considered a "television station" for purposes of Section 76.5(b) of the Commission's Rules and for purposes of Part 76 generally. This can be accomplished by a few streamlined revisions, as suggested in Attachment C. In particular, the Commission should specify that the definition of "good quality signal" will

be identical for Next Generation TV and current DTV stations, given that Next Generation TV contours will be essentially identical to existing station contours.[18]

Notice by Must-Carry Stations. Must-carry broadcasters should give notice to all MVPDs at least sixty days in advance of shifting ATSC 1.0 signals to another facility. Generally, must-carry obligations will not require MVPDs to purchase new equipment at this time, as they will continue to receive signals in the current digital standard via the simulcasting agreements discussed above.

B. Conforming Rule Changes.

As shown in Attachment C, minor changes to Parts 73, 74 and 76 of the Commission's Rules will be needed to conform those rules and policies to the environment in which television licensees' obligations will extend to both the current DTV standard and Next Generation TV transmission.

No changes are needed to the Commission's rules concerning emergency alerts, closed captioning, or video description. Stakeholders have ensured that essential requirements for closed captioning, video description, and emergency alerts have been built into the new standard. While broadcasters and manufacturers are seeking Commission authorization for voluntary use of the Next Generation TV transmission standard, these requirements clearly are not optional or voluntary for broadcasters or manufacturers that choose to deploy Next Generation TV or build Next Generation TV receivers.

---

[18] *See* MSW Report (Attachment B). We believe that the dual requirements of the Commission's rules -- that stations have a specified signal level at the head-end (15dB CNR) and that they must deliver a "good quality" video and audio signal -- can apply equally to Next Generation TV as to the current DTV standard.

The Emergency Alert System ("EAS"). Broadcasters currently incorporate emergency alert messages into the DTV television broadcast signal. The same system will be used for Next Generation TV broadcasting. The capability for more effective emergency alerts will be significantly enhanced, however, under the more robust and capable Next Generation TV standard. New optional features include the ability for broadcasters to convey more detailed emergency information, such as locally relevant evacuation instructions or interactive maps, as well as the possibility that receivers have the capability to "wake up" in response to an active alert.

Closed Captioning. The current DTV system requires that closed captioning data be inserted into video "picture-level user data," and receivers then decode and display the inserted data. The Next Generation TV standard will use Supplemental Enhancement Information messages, just as the current DTV standard does, but will offer a different format for caption data from that used by DTV. The Commission's Rules already anticipate this technology, and provide that data in this format is compliant. *See* 47 C.F.R. § 79.4.

Video Description/Additional Languages. The Commission's Rules for video description and second-language audio provide for pass-through of required content, but do not specify a standard for this requirement to be accomplished. The Next Generation TV standard has functionality for video description and additional language support, and can be implemented in compliance with the Commission's Rules.

V. Conclusion and Request for Expedited Action

The public interest benefits in implementing Next Generation TV support the Commission moving forward with this proceeding quickly. By allowing voluntary use of

this new transmission standard now, the Commission will give broadcasters and manufacturers the certainty they need to invest in equipment to support innovative new technologies as part of the repack of broadcast spectrum following the incentive auction.

We respectfully request that the Commission expedite this proceeding to better facilitate the earliest possible availability of Next Generation TV equipment and the launch of next generation broadcast television service to the public.

Respectfully submitted,

AMERICA'S PUBLIC TELEVISION STATIONS

By: /s/
Lonna M. Thompson
Executive Vice President, Chief Operating Officer and General Counsel
Association of Public Television Stations
2100 Crystal Drive, Suite 700
Arlington, Virginia 22202

NATIONAL ASSOCIATION OF BROADCASTERS

By: /s/
Rick Kaplan
General Counsel and Executive Vice, President, Legal and Regulatory Affairs
National Association of Broadcasters
1771 N Street, N.W.
Washington, D.C. 20036

April 13, 2016

AWARN ALLIANCE

By: /s/
John M. Lawson
Executive Director
AWARN Alliance
7125 Park Terrace
Alexandria, Virginia 22307

CONSUMER TECHNOLOGY ASSOCIATION

By: /s/
Julie M. Kearney
Vice President of Regulatory Affairs
Consumer Technology Association
1919 South Eads Street
Arlington, Virginia 22202

Attachment A

ATSC Standard: A/321
System Discovery and Signaling (approved March 23, 2016)

ATSC Standard:
A/321, System Discovery and Signaling

Doc. A/321:2016
23 March 2016

Advanced Television Systems Committee
1776 K Street, N.W.
Washington, D.C. 20006
202-872-9160

The Advanced Television Systems Committee, Inc., is an international, non-profit organization developing voluntary standards for digital television. The ATSC member organizations represent the broadcast, broadcast equipment, motion picture, consumer electronics, computer, cable, satellite, and semiconductor industries.

Specifically, ATSC is working to coordinate television standards among different communications media focusing on digital television, interactive systems, and broadband multimedia communications. ATSC is also developing digital television implementation strategies and presenting educational seminars on the ATSC Standards.

ATSC was formed in 1982 by the member organizations of the Joint Committee on InterSociety Coordination (JCIC): the Electronic Industries Association (EIA), the Institute of Electrical and Electronic Engineers (IEEE), the National Association of Broadcasters (NAB), the National Cable Telecommunications Association (NCTA), and the Society of Motion Picture and Television Engineers (SMPTE). Currently, there are approximately 150 members representing the broadcast, broadcast equipment, motion picture, consumer electronics, computer, cable, satellite, and semiconductor industries.

ATSC Digital TV Standards include digital high definition television (HDTV), standard definition television (SDTV), data broadcasting, multichannel surround-sound audio, and satellite direct-to-home broadcasting.

Note: The user's attention is called to the possibility that compliance with this Standard may require use of an invention covered by patent rights. By publication of this Standard, no position is taken with respect to the validity of this claim or of any patent rights in connection therewith. One or more patent holders have, however, filed a statement regarding the terms on which such patent holder(s) may be willing to grant a license under these rights to individuals or entities desiring to obtain such a license. Details may be obtained from the ATSC Secretary and the patent holder.

Revision History

Version	Date
Candidate Standard approved	6 May 2015
Revised CS approved (editorial and substantive changes made)	7 December 2015
Standard approved	23 March 2016

Table of Contents

1. SCOPE 5
   1.1 Introduction and Background 5
   1.2 Organization 5
2. REFERENCES 6
   2.1 Normative References 6
   2.2 Informative References 6
3. DEFINITION OF TERMS 6
   3.1 Compliance Notation 6
   3.2 Treatment of Syntactic Elements 6
      3.2.1 Reserved Elements 6
   3.3 Acronyms, Abbreviations and Mathematical Operators 7
   3.4 Terms 7
   3.5 Extensibility 7
      3.5.1 Backward-compatible Extensibility Mechanisms 7
      3.5.2 Non-backward-compatible Extensibility Mechanisms 8
      3.5.3 Extensions With Unknown Compatibility 8
4. BOOTSTRAP OVERVIEW 8
   4.1 Features 8
   4.2 Central Concepts 9
5. BOOTSTRAP SPECIFICATION 10
   5.1 Signal Dimensions 10
   5.2 Frequency Domain Sequence 10
      5.2.1 ZC Sequence Generation 11
      5.2.2 Pseudo-Noise Sequence Generation 11
      5.2.3 Subcarrier Mapping and Modulation 12
      5.2.4 Inverse Fast Fourier Transform 13
   5.3 Symbol Signaling 13
      5.3.1 Signaling Bits 13
      5.3.2 Relative Cyclic Shift 13
      5.3.3 Absolute Cyclic Shift 14
   5.4 Time Domain Structure 14
      5.4.1 CAB Structure 15
      5.4.2 BCA Structure 16
6. BOOTSTRAP SIGNAL STRUCTURE 17
   6.1 Bootstrap Signaling for Major Version Zero (0) 17
      6.1.1 Signaling Minor Versions for Major Version Zero (0) 17
   6.2 Future Major Versions 20

ANNEX A: EXAMPLE METHOD OF GRAY CODE DE-MAPPING AT RECEIVER 21
   A.1 Gray Code De-mapping at Receiver 21

ANNEX B: BOOTSTRAP SIGNALING BIT ROBUSTNESS AND OTHER CHARACTERISTICS 22
   B.1 Gray Code Mapping Examples 22
      B.1.1 Gray Code Mapping Example With Four Signaling Bits 22
      B.1.2 Gray Code Mapping Example With Three Signaling Bits 24

B.2 Additional Observations on Bootstrap Signaling Bits 25
B.3 Impact of Errors in the Estimation of Bootstrap Signaling Bit Values at a Receiver 26

Index of Figures

Figure 4.1 General physical layer frame and bootstrap structure. 9
Figure 5.1 Frequency domain processing for bootstrap generation. 10
Figure 5.2 Pseudo-noise sequence generator. 11
Figure 5.3 Sequence mapping to subcarriers. 12
Figure 5.4 Generation of the cyclically shifted time domain sequence from the frequency domain sequence. 15
Figure 5.5 CAB time domain symbol structure. 15
Figure 5.6 BCA time domain symbol structure. 16
Figure B.1.1 Example Gray code mapping with four signaling bits..... 24
Figure B.1.2: Example Gray code mapping with three signaling bits..... 25

Index of Tables

Table 6.1 Initial Register State (pseudo-noise seed) of the Pseudo-Noise Sequence Generator for each respective bootstrap_minor_version 17
Table 6.2 Signaling Fields for Bootstrap Symbol 1 18
Table 6.3 Minimum Time Interval to Next Frame of the Same Major and Minor Version 19
Table 6.4 Signaling Fields for Bootstrap Symbol 2 20
Table 6.5 Signaling Fields for Bootstrap Symbol 3 20
Table B.1.1 Example Mapping of Four Signaling Bits to Relative Cyclic Shifts 22
Table B.1.2 Example Mapping of Relative Cyclic Shifts to Four Signaling Bits 23
Table B.1.3: Example Mapping of Three Signaling Bits to Relative Cyclic Shifts 24
Table B.1.4: Example Mapping of Relative Cyclic Shifts to Three Signaling Bits 25

ATSC Standard:
A/321, System Discovery and Signaling

1. SCOPE

This Standard constitutes the normative specification for the initial entry point of a physical layer waveform. Syntax and semantics of this specification are for system discovery only and other ATSC Standards may further constrain and/or supplement this physical layer discovery specification.

1.1 Introduction and Background

Broadcasters anticipate providing multiple wireless-based services, in addition to just broadcast television, in the future. Such services may be time-multiplexed together within a single RF channel. As a result, there exists a need to indicate, at a low level, the type or form of a signal that is being transmitted during a particular time period, so that a receiver can discover and identify the signal, which in turn indicates how to receive the services that are available via that signal.

To enable such discovery, a bootstrap signal can be used. This comparatively short signal precedes, in time, a longer transmitted signal that carries some form of data. New signal types, at least some of which have likely not yet even been conceived, could also be provided by a broadcaster and identified within a transmitted waveform through the use of a bootstrap signal associated with each particular time-multiplexed signal. Some future signal types indicated by a particular bootstrap signal may even be outside the scope of the ATSC.

The bootstrap provides a universal entry point into a broadcast waveform. The bootstrap employs a fixed configuration (e.g., sampling rate, signal bandwidth, subcarrier spacing, time-domain structure) known to all receiver devices and carries information to enable processing and decoding the signal associated with a detected bootstrap. This capability ensures that broadcast spectrum can be adapted to carry new signal types that are preceded by the universal entry point provided by the bootstrap, for public interest to continue to be served in the future.

The bootstrap has been designed to be a very robust signal and detectable even at low signal levels. As a result of this robust encoding, individual signaling bits within the bootstrap are comparatively expensive in terms of the physical resources that they occupy for transmission. Hence, the bootstrap is generally intended to signal only the minimum amount of information required for system discovery (i.e., identification of the associated signal) and for initial decoding of the following signal.

1.2 Organization

This document is organized as follows:

- Section 1 – Outlines the scope of this document and provides a general introduction
- Section 2 – Lists references and applicable documents
- Section 3 – Provides a definition of terms, acronyms, and abbreviations for this document
- Section 4 – Bootstrap overview
- Section 5 – Detailed bootstrap specification
- Section 6 – Contains bootstrap signaling sets that provide bootstrap configurations specific to a particular signal type (such as ATSC 3.0)

- Annex A:
  Example Method of Gray Code De-mapping at Receiver
- Annex B: Bootstrap Signaling Bit Robustness and Other Characteristics

2. REFERENCES

All referenced documents are subject to revision. Users of this Standard are cautioned that newer editions might or might not be compatible.

2.1 Normative References

The following documents, in whole or in part, as referenced in this document, contain specific provisions that are to be followed strictly in order to implement a provision of this Standard.

[1] IEEE: "Use of the International Systems of Units (SI): The Modern Metric System," Doc. SI 10, Institute of Electrical and Electronics Engineers, New York, N.Y.

2.2 Informative References

The following documents contain information that may be helpful in applying this Standard.

[2] ATSC: "ATSC Candidate Standard: Signaling, Delivery, Synchronization and Error Protection," Doc. A/331(S33-174r1), Advanced Television System Committee, Washington, D.C., 5 January 2016. (work in process)

3. DEFINITION OF TERMS

With respect to definition of terms, abbreviations, and units, the practice of the Institute of Electrical and Electronics Engineers (IEEE) as outlined in the Institute's published standards [1] shall be used. Where an abbreviation is not covered by IEEE practice or industry practice differs from IEEE practice, the abbreviation in question will be described in Section 3.3 of this document.

3.1 Compliance Notation

This section defines compliance terms for use by this document:

shall – This word indicates specific provisions that are to be followed strictly (no deviation is permitted).

shall not – This phrase indicates specific provisions that are absolutely prohibited.

should – This word indicates that a certain course of action is preferred but not necessarily required.

should not – This phrase means a certain possibility or course of action is undesirable but not prohibited.

3.2 Treatment of Syntactic Elements

This document contains symbolic references to syntactic elements used in the audio, video, transport and transmission coding subsystems. These references are typographically distinguished by the use of a different font (e.g., restricted), may contain the underscore character (e.g., sequence_end_code) and may consist of character strings that are not English words (e.g., dynrng).

3.2.1 Reserved Elements

One or more reserved bits, symbols, fields, or ranges of values (i.e., elements) may be present in this document. These are used primarily to enable adding new values to a syntactical structure

without altering its syntax or causing a problem with backward compatibility, but they also can be used for other reasons.

The ATSC default value for reserved bits is '1.' There is no default value for other reserved elements. Use of reserved elements except as defined in ATSC Standards or by an industry standards setting body is not permitted. See individual element semantics for mandatory settings and any additional use constraints. As currently-reserved elements may be assigned values and meanings in future versions of this Standard, receiving devices built to this version are expected to ignore all values appearing in currently-reserved elements to avoid possible future failure to function as intended.

3.3 Acronyms, Abbreviations and Mathematical Operators

The following acronyms and abbreviations are used within this document.

ATSC – Advanced Television Systems Committee
BSR – Baseband Sampling Rate
CAZAC – Constant Amplitude Zero Auto-Correlation
DC– Direct Current
EAS – Emergency Alert System
FFT – Fast Fourier Transform
IEEE – Institute of Electrical and Electronic Engineers
IFFT – Inverse Fast Fourier Transform
kHz – kilohertz
LFSR – Linear Feedback Shift Register
MHz – Megahertz
ms – millisecond
PN – Pseudo-Noise
RCS – relative cyclic shift
µs – microsecond
ZC – Zadoff-Chu
$\lfloor X \rfloor$ The greatest integer less than or equal to X

3.4 Terms

The following terms are used within this document.

Reserved – Set aside for future use by a Standard.

3.5 Extensibility

This Standard is designed to be extensible via both backward-compatible mechanisms and by replacement syntactical mechanisms that are not backward-compatible. It also establishes means to explicitly signal collections of components to establish services with various characteristics. The enumeration of the set of components that can be used to present a service is established to enable different combinations of the defined components to be offered without altering this Standard.

3.5.1 Backward-compatible Extensibility Mechanisms

The backward-compatible mechanisms are:

Table length extensions – Future amendments to this Standard may include new fields at the ends of certain tables. Tables that may be extensible in this way include those in which the last byte of the field may be determined without use of the section_length field. Such an extension is a backward-compatible addition.

Definition of reserved values – Future amendments to this Standard may establish meaning for fields that are asserted to be "reserved" in a table's syntax, semantic or schema in the initial release. Such an extension is a backward-compatible addition due to the definition of "reserved."

3.5.2 Non-backward-compatible Extensibility Mechanisms

Tables or other structures that can be changed in a non-compatible manner each contain a field or other signaling mechanism labeled major version (or major_version) in order to explicitly signal their syntax. More than one instance (each with a different major version) can be expected to be present wherever such tables, schema, or structures are used.

3.5.3 Extensions with Unknown Compatibility

This Standard establishes a general signaling approach that enables new combinations of components to be transmitted that define a new or altered service offering. Receiver support for such sets is unknown and labeling of such sets of extensions to the service signaling established herein is the responsibility of the document establishing a given set of capabilities.

4. BOOTSTRAP OVERVIEW

4.1 Features

The bootstrap provides a universal entry point into a digital transmission signal. It employs a fixed configuration (e.g., sampling rate, signal bandwidth, subcarrier spacing, time domain structure) known to all receiver devices.

Figure 4.1 shows an overview of the general structure of a physical layer frame, the bootstrap signal, and the bootstrap position relative to the post-bootstrap waveform (i.e., the remainder of the frame). The bootstrap consists of a number of symbols, beginning with a synchronization symbol positioned at the start of each frame period to enable signal discovery, coarse synchronization, frequency offset estimation, and initial channel estimation. The remainder of the bootstrap contains sufficient control signaling to permit the reception and decoding of the remainder of the frame to begin.

Only the bootstrap structure and contents are specified within the present document.

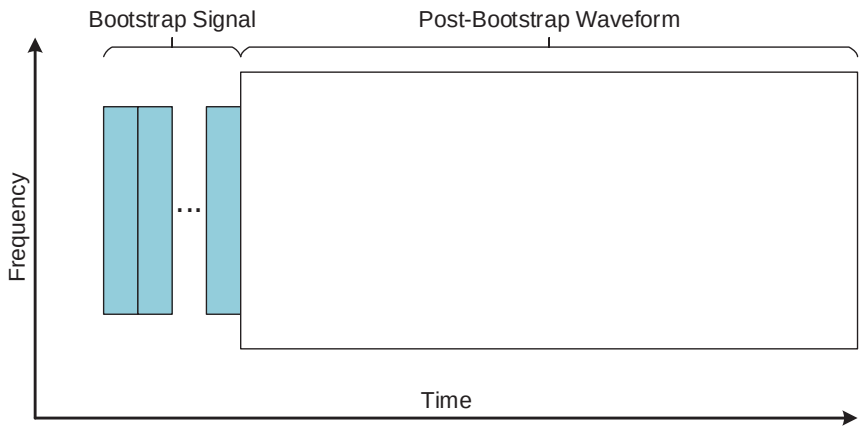

Figure 4.1 General physical layer frame and bootstrap structure.

4.2 Central Concepts

The bootstrap design exhibits flexibility via the following core concepts.

- **Versioning:** The bootstrap version is expressed in text as a major version number (decimal digit) followed by a period and a minor version number (decimal digit), e.g., bootstrap version 0.0. The major version and minor version are referenced in code as bootstrap_major_version and bootstrap_minor_version, respectively. A Zadoff-Chu (ZC) root and a pseudo-noise (PN) sequence seed are used for generating the base encoding sequence for bootstrap symbol contents. A major version number (corresponding to a particular signal type) is signaled via selection of the ZC root. A minor version (within a particular major version) is signaled via appropriate selection of the PN sequence seed. The syntax and semantics of signaling fields within the bootstrap are specified within the Standard(s) to which the major and minor versions refer.
- **Scalability:** The number of bits signaled per bootstrap symbol is defined, up to a specified maximum, for a particular major/minor version. The maximum number of bits per symbol is

$$N_{bps} = \lfloor \log_2(N_{FFT}/CyclicShiftTol) \rfloor,$$

where $\lfloor X \rfloor$ is the greatest integer less than or equal to X (Floor function).

N_{bps} affects the cyclic shift tolerance, and is specified in the Standard(s) for the particular version. The number of signaling bits per symbol can be increased up to the specified maximum as a backward-compatible change when incrementing the minor version within the same major version.
- **Extensibility:** The bootstrap signal duration is extensible in whole symbol periods, with each new symbol carrying up to N_{bps} additional signaling bits. Bootstrap signal termination is signaled by a final symbol having 180° phase inversion relative to the preceding symbol.
- A bootstrap containing undefined signaling information (such as the use of reserved values) is expected to be discarded by the receiver.

5. BOOTSTRAP SPECIFICATION

5.1 Signal Dimensions

The bootstrap sampling rate, bandwidth, FFT size, and symbol length shall remain fixed even as version numbers and/or the other information signaled by the bootstrap evolve.

The bootstrap shall use a fixed sampling rate of 6.144 Msamples/second and a fixed bandwidth of 4.5 MHz, regardless of the channel bandwidth used for the remainder of the frame. The time length of each sample of the bootstrap is fixed by the sampling rate.

$$f_S = 6.144 \text{ Ms/sec}$$

$$T_S = 1/f_S$$

$$BW_{\text{Bootstrap}} = 4.5 \text{ MHz}$$

An FFT size of 2048 results in a subcarrier spacing of 3 kHz.

$$N_{FFT} = 2048$$

$$f_\Delta = f_S/N_{FFT} = 3 \text{ kHz}$$

Each bootstrap symbol shall have time duration of 500 µs.

$$T_{\text{symbol}} = 500\ \mu s$$

The overall time duration of the bootstrap depends on the number of bootstrap symbols, which is specified as N_S. A fixed number of bootstrap symbols shall not be assumed.

5.2 Frequency Domain Sequence

The values used for each bootstrap symbol shall originate in the frequency domain with a ZC sequence modulated by a pseudo-noise (PN) sequence as shown in Figure 5.1. The ZC root and PN seed shall signal the major and minor versions of the bootstrap, respectively.

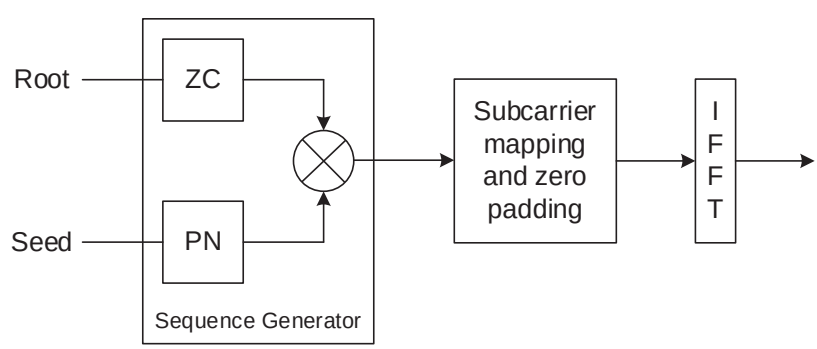

Figure 5.1 Frequency domain processing for bootstrap generation.

The resulting complex sequence shall be applied per subcarrier at the IFFT input. The PN sequence shall introduce a phase rotation to individual complex subcarriers, thus retaining the desirable Constant Amplitude Zero Auto-Correlation (CAZAC) properties of the original ZC

sequence. The PN sequence further suppresses spurious peaks in the autocorrelation response, thereby providing additional signal separation between cyclic shifts of the same root sequence.

5.2.1 ZC Sequence Generation

The ZC sequence $z_q(k)$ shall have length $N_{ZC} = 1499$. This is the largest prime number that results in a channel bandwidth no greater than 4.5 MHz with a subcarrier spacing of $f_\Delta = 3$ kHz.

The ZC sequence shall be parameterized by a root, q, that corresponds to a major version number, where

$$z_q(k) = e^{-j\pi q \frac{k(k+1)}{N_{ZC}}}$$

In the above equation, $q \in \{1, 2, \ldots, N_{ZC} - 1\}$ and $k = 0, 1, 2, \ldots, N_{ZC} - 1$.

5.2.2 Pseudo-Noise Sequence Generation

The PN sequence generator shall be derived from a Linear Feedback Shift Register (LFSR) of length (order) $l = 16$ as shown in Figure 5.2. Its operation shall be governed by a generator polynomial g specifying the taps in the LFSR feedback path. Specification of the generator polynomial g and initial state of the registers, r_{init} defines a seed, which corresponds to a minor version number.

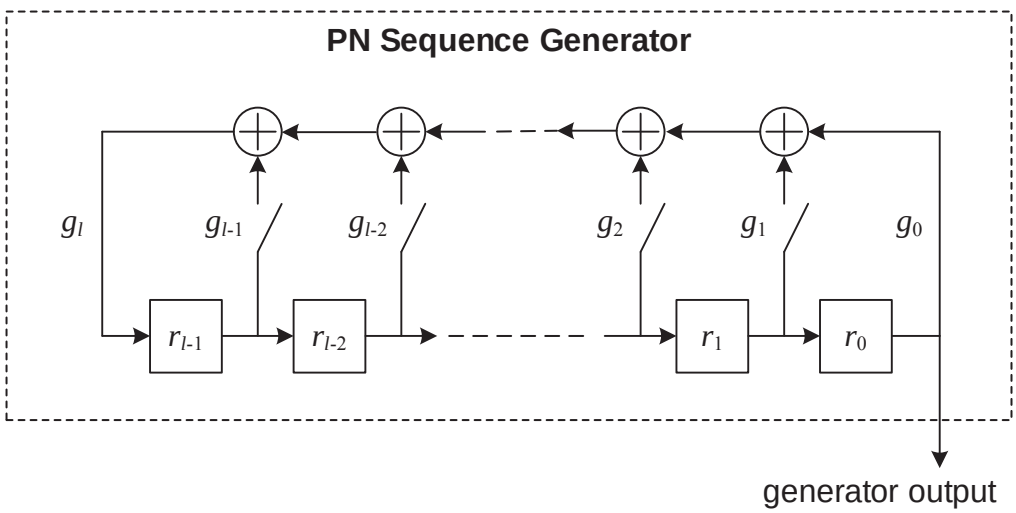

Figure 5.2 Pseudo-noise sequence generator.

The PN sequence generator registers shall be reinitialized with the initial state from the seed prior to the generation of the first symbol in a new bootstrap. The PN sequence generator shall continue to sequence from one symbol to the next within a bootstrap and shall not be re-initialized for successive symbols within the same bootstrap.

The output from the PN sequence generator in Figure 5.2 is defined to be $p(k)$. $p(k)$ will have either the value 0 or 1. $p(0)$ shall be equal to the PN sequence generator output after the PN sequence generator has been initialized with the appropriate seed value and before any clocking of the shift register in Figure 5.2 occurs. A new output bit $p(k)$ shall subsequently be generated every time the shift register in Figure 5.2 is clocked one position to the right.

The generator polynomial for the pseudo-noise sequence generator shall be as follows.

$$\boldsymbol{g} = \{g_l, \dots, g_0\} = \{1,1,1,0,0,0,0,0,0,0,0,0,0,0,0,1,1\}$$

$$p(x) = x^{16} + x^{15} + x^{14} + x + 1$$

5.2.3 Subcarrier Mapping and Modulation

Figure 5.3 shows an overview of the mapping of the frequency domain sequence to subcarriers. The ZC sequence value that maps to the DC subcarrier (i.e., $z_q((N_{ZC} - 1)/2)$) shall be set to zero so that the DC subcarrier is null. The subcarrier indices shall be as shown in Figure 5.3 with the central DC subcarrier having index 0.

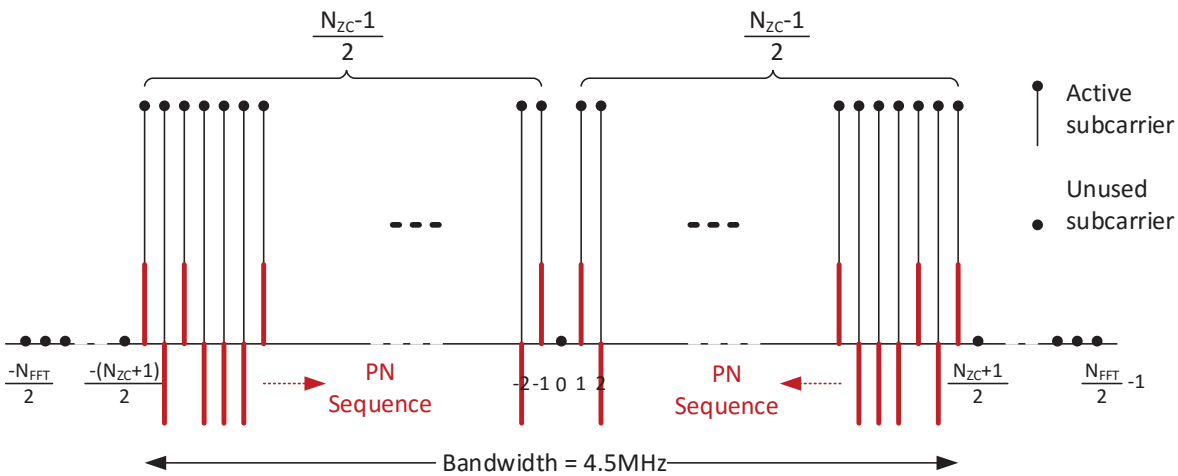

Figure 5.3 Sequence mapping to subcarriers.

The product of the ZC and PN sequences shall have reflective symmetry about the DC subcarrier. The ZC sequence has a natural reflective symmetry about the DC subcarrier. A reflective symmetry of the PN sequence about the DC subcarrier shall be introduced by mirror-reflecting the PN sequence values assigned to subcarriers below the DC subcarrier to the subcarriers above the DC subcarrier. For example, in Figure 5.3 the PN sequence values at subcarriers -1 and +1 are identical, as are the PN sequence values at subcarriers -2 and +2 As a result, the product of the ZC and PN sequences also has reflective symmetry about the DC subcarrier.

As illustrated in Figure 5.3, the subcarrier values for the *n*-th symbol of the bootstrap ($0 \le n < N_S$) shall be calculated as follows, where $N_H = (N_{ZC} - 1)/2$. The ZC sequence shall be the same for every symbol, while the PN sequence shall advance with each symbol.

$$s_n(k) = \begin{cases} z_q(k + N_H) \times c\big((n+1) \times N_H + k\big) & -N_H \le k \le -1 \\ z_q(k + N_H) \times c\big((n+1) \times N_H - k\big) & 1 \le k \le N_H \\ 0 & \text{otherwise} \end{cases}$$

where $c(k) = 1 - 2 \times p(k)$ with $c(k)$ having either the value +1 or -1.

The final symbol in the bootstrap shall be indicated by a phase inversion (i.e., a rotation of 180°) of the subcarrier values for that particular symbol. This bootstrap termination signaling

enables extensibility by allowing the number of symbols in the bootstrap to be increased for additional signaling capacity in a backward-compatible manner without requiring the major version number to be changed. Phase inversion is equivalent to multiplying each subcarrier value by $e^{j\pi} = -1$.

$$\tilde{s}_n(k) = \begin{cases} s_n(k) & 0 \le n < N_S - 1 \\ -s_n(k) & n = N_S - 1 \end{cases}$$

This phase inversion allows receivers to correctly determine the end point of the bootstrap, including the end point of a bootstrap for a minor version (of the same major version) that is later than the minor version for which a receiver was designed and that has been extended by one or more bootstrap symbols. Receivers are not expected to respond to the signaling bit contents of a bootstrap symbol that the receiver has not been provisioned to decode.

5.2.4 Inverse Fast Fourier Transform

The mapped frequency domain sequence $\tilde{s}_n(k)$ shall be translated to a time domain sequence $\tilde{A}_n(t)$ using a $N_{FFT} = 2048$ point IFFT.

$$\tilde{A}_n(t) = \frac{1}{sqrt(Nzc-1)}\left(\sum_{k=-(N_{ZC}-1)/2}^{-1} \tilde{s}_n(k)\, e^{j2\pi k f_\Delta t} + \sum_{k=1}^{(N_{ZC}-1)/2} \tilde{s}_n(k) e^{j2\pi k f_\Delta t}\right)$$

5.3 Symbol Signaling

5.3.1 Signaling Bits

Information shall be signaled via the bootstrap symbols through the use of cyclic shifts in the time domain of the $\tilde{A}_n(t)$ time domain sequence. This sequence has a length of $N_{FFT} = 2048$ and thus 2048 distinct cyclic shifts are possible (from 0 to 2047, inclusive).

With 2048 possible cyclic shifts, up to $\log_2(2048) = 11$ bits can be signaled. In reality, not all of these bits will actually be used. Let N_b^n specify the number of valid signaling bits that are used for the *n*-th bootstrap symbol ($1 \le n < N_S$), and let $b_0^n, \ldots, b_{N_b^n-1}^n$ represent the values of those bits. Each of the valid signaling bits $b_0^n, \ldots, b_{N_b^n-1}^n$ shall have the value 0 or 1. Each of the remaining signaling bits $b_{N_b^n}^n, \ldots, b_{10}^n$ shall be set to 0.

N_b^n for one or more specific bootstrap symbols may be increased when defining a new minor version within the same major version in order to make use of previously unused signaling bits while still maintaining backward compatibility. A receiver provisioned to decode the signaling bits for a particular major/minor version is not expected to decode any new additional signaling bits that may be used in a later minor version within the same major version.

5.3.2 Relative Cyclic Shift

Let $\widetilde{M}_n$ ($0 \le \widetilde{M}_n < N_{FFT}$) represent the cyclic shift for the *n*-th bootstrap symbol ($1 \le n < N_S$) relative to the cyclic shift for the previous bootstrap symbol. $\widetilde{M}_n$ shall be calculated from the valid signaling bit values for the *n*-th bootstrap symbol using a Gray code created per the following equations. Let $\widetilde{M}_n$ be represented in binary form as a set of bits $m_{10}^n\, m_9^n \ldots m_1^n\, m_0^n$. Each bit of $\widetilde{M}_n$ shall be computed as follows, where the summation of the signaling bits followed by the modulo-

two operation effectively performs a logical exclusive OR operation on the signaling bits in question.

$$m_i^n = \begin{cases} \left(\sum_{k=0}^{10-i} b_k^n\right) \bmod 2 & i > 10 - N_b^n \\ 1 & i = 10 - N_b^n \\ 0 & i < 10 - N_b^n \end{cases}$$

The above equation ensures that the relative cyclic shift $\widetilde{M}_n$ is calculated to provide the maximum tolerance to any errors at the receiver when estimating the relative cyclic shift for a received bootstrap symbol. If the number of valid signaling bits N_b^n for a specific bootstrap symbol is increased in a future minor version within the same major version, the equation also ensures that the relative cyclic shifts for that future minor version bootstrap symbol will be calculated in such a manner that will still allow a receiver provisioned for an earlier minor version to correctly decode the signaling bit values that it is provisioned to decode, and hence backward compatibility will be maintained.

Note: In general, the expected robustness of signaling bit b_i^n will be greater than that of b_k^n if $i < k$.

5.3.3 Absolute Cyclic Shift

The first bootstrap symbol shall be used for initial time synchronization and shall signal the major and minor version numbers via the ZC root and PN seed parameters, respectively. This symbol does not signal any additional information and shall always have a cyclic shift of 0.

The differentially-encoded absolute cyclic shift, M_n ($0 \leq M_n < N_{FFT}$), applied to the *n*-th bootstrap symbol shall be calculated by summing the absolute cyclic shift for bootstrap symbol *n*–1 and the relative cyclic shift for bootstrap symbol *n*, modulo the length of the time domain sequence.

$$M_n = \begin{cases} 0 & n = 0 \\ \left(M_{n-1} + \widetilde{M}_n\right) \bmod N_{FFT} & 1 \leq n < N_S \end{cases}$$

The absolute cyclic shift shall then be applied to obtain the cyclically shifted time domain sequence $A_n(t)$ from the output of the IFFT operation.

$$A_n(t) = \tilde{A}_n\left((t + M_n) \bmod N_{FFT}\right)$$

5.4 Time Domain Structure

Each bootstrap symbol shall be composed of three parts: A, B, and C, where each of these parts consists of a sequence of complex-valued time domain samples. Part A shall be derived as the IFFT of the frequency domain structure with an appropriate cyclic shift applied as shown in Figure 5.4 (i.e. part A shall be equal to $A_n(t)$).

Parts B and C shall each be composed of samples taken from part A with a frequency shift of $\pm f_\Delta$ (equal to the subcarrier spacing) and a possible phase shift of $e^{-j\pi}$ introduced to the frequency domain sequence $\tilde{s}_n(k)$ used for calculating the samples of part B.

Parts A, B, and C shall consist of $N_A = N_{FFT} = 2048$, $N_B = 504$, and $N_C = 520$ samples, respectively. Each bootstrap symbol consequently consists of $N_A + N_B + N_C = 3072$ samples for an equivalent duration of 500 µs.

There shall be two variants of the time domain structure: CAB and BCA. The initial symbol of the bootstrap (i.e., bootstrap symbol 0), provided for sync detection, shall employ the CAB variant. The remaining bootstrap symbols (i.e., bootstrap symbol n where $1 \leq n < N_S$) shall conform to the BCA variant up to and including the bootstrap symbol that indicates field termination.

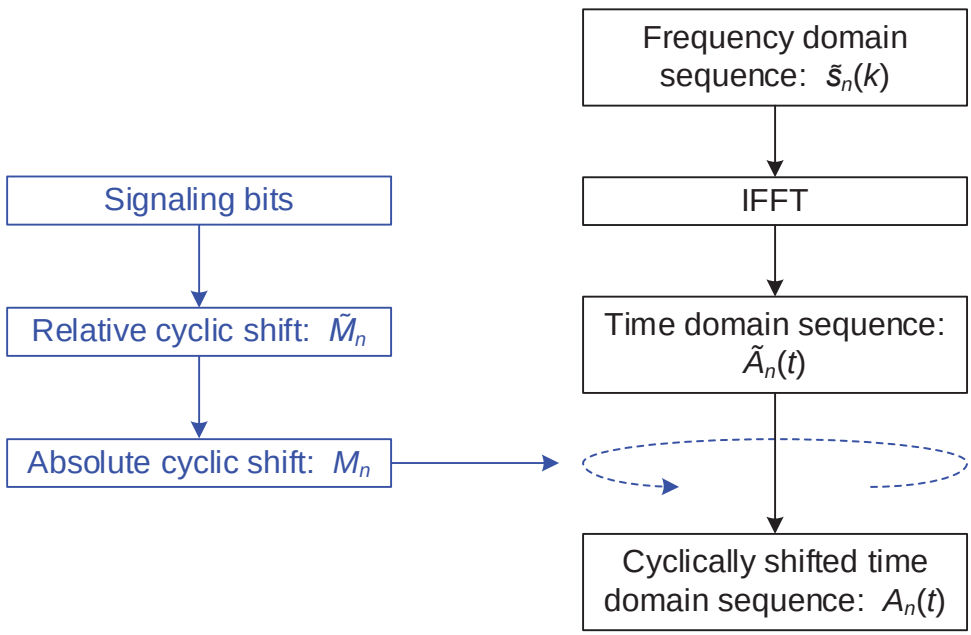

Figure 5.4 Generation of the cyclically shifted time domain sequence from the frequency domain sequence.

5.4.1 CAB Structure

The CAB time domain structure shall be as shown in Figure 5.5.

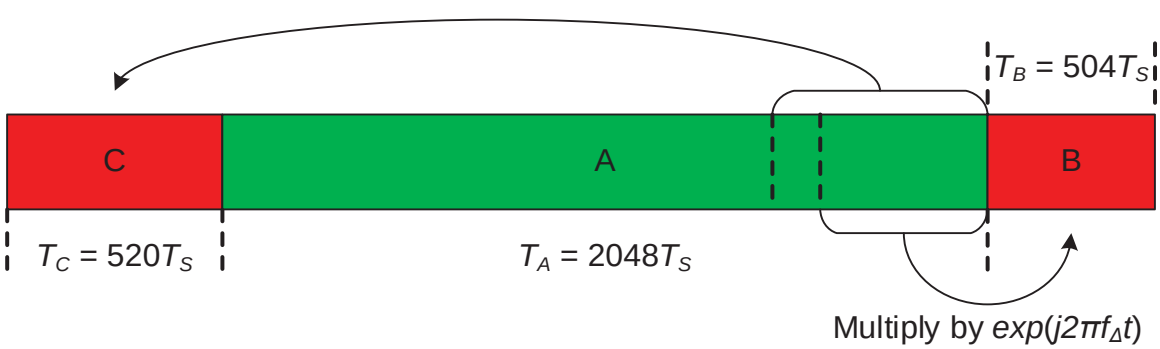

Figure 5.5 CAB time domain symbol structure.

For the CAB structure, part C shall be composed of the last $N_C = 520$ samples of part A, while part B shall be composed of the last $N_B = 504$ samples of part A with a frequency shift of $+f_\Delta$ and

a phase shift of $e^{-j\pi}$ applied to the originating frequency domain sequence $\tilde{s}_n(k)$ used for calculating part A. The samples for part B can be taken as the negation of the last N_B samples of a cyclically shifted time domain sequence calculated as shown in Figure 5.4, where the input frequency domain sequence at the top of the block diagram is equal to $\tilde{s}_n(k)$ shifted one subcarrier position higher in frequency (i.e. $\hat{s}_n(k) = \tilde{s}_n\big((k - 1 + N_{FFT})\text{mod } N_{FFT}\big)$, with $\hat{s}_n(k)$ being the input frequency domain sequence for generating the frequency-and-phase-shifted samples for part B). Alternatively, the frequency and phase shifts for generating the part B samples can be introduced in the time domain by multiplying the appropriately extracted samples from part A by $e^{j2\pi f_\Delta t}$ as shown in the following equation.

$$S_{CAB}^{n}(t) = \begin{cases} A_n(t + 1528T_S) & 0 \le t < 520T_S \\ A_n(t - 520T_S) & 520T_S \le t < 2568T_S \\ A_n(t - 1024T_S)e^{j2\pi f_\Delta t} & 2568T_S \le t < 3072T_S \\ 0 & \text{otherwise} \end{cases}$$

5.4.2 BCA Structure

The BCA time domain structure shall be as shown in Figure 5.6.

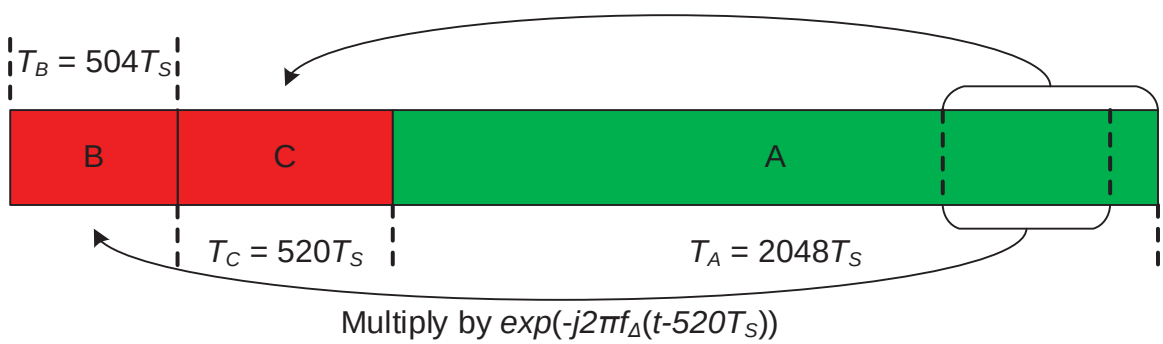

Figure 5.6 BCA time domain symbol structure.

For the BCA structure, part C shall be composed of the last $N_C = 520$ samples of part A, but part B shall be composed of the first N_B =504 samples of part C with a frequency shift of $-f_\Delta$ applied to the originating frequency domain sequence $\tilde{s}_n(k)$ used for calculating part A. In a similar fashion to that described in Section 5.4.1, the samples for part B can be taken as the last N_B samples of a cyclically shifted time domain sequence calculated as shown in Figure 5.4, where the input frequency domain sequence at the top of the block diagram is equal to $\tilde{s}_n(k)$ shifted one subcarrier position lower in frequency (i.e. $\hat{s}_n(k) = \tilde{s}_n\big((k + 1)\text{mod } N_{FFT}\big)$, with $\hat{s}_n(k)$ being the input frequency domain sequence for generating the frequency-shifted samples for part B). The frequency shift for generating the part B samples can alternatively be introduced in the time domain by multiplying the appropriate samples from part A by $e^{-j2\pi f_\Delta t}$ with a constant time offset of $-520T_S$ being included to account for the correct extraction of the appropriate samples of part A, as shown in the following equation.

$$S_{BCA}^{n}(t) = \begin{cases} A_n(t + 1528T_S)e^{-j2\pi f_\Delta (t-520T_S)} & 0 \le t < 504T_S \\ A_n(t + 1024T_S) & 504T_S \le t < 1024T_S \\ A_n(t - 1024T_S) & 1024T_S \le t < 3072T_S \\ 0 & \text{otherwise} \end{cases}$$

Note that the samples for part B are taken from slightly different sections of part A for each of the CAB and BCA symbol structures.

6. BOOTSTRAP SIGNAL STRUCTURE

This section enumerates the signaling sets for specific versions of the general bootstrap structure described in Section 4.2, using the structure defined by the provisions of Section 5.

Each signaling set includes the configuration parameter values, a list of control information fields, and an assignment of those values and fields to specific signaling bits.

A bootstrap containing undefined signaling information (such as the use of reserved values) is expected to be discarded by the receiver.

6.1 Bootstrap Signaling for Major Version Zero (0)

This section and its subsections apply when bootstrap_major_version = 0.

The ZC sequence root (q), as specified in Section 5.2.1, shall be 137 when bootstrap_major_version = 0.

6.1.1 Signaling Minor Versions for Major Version Zero (0)

This section specifies how to signal minor versions when bootstrap_major_version = 0. The number of symbols (N_S) in the bootstrap set shall be greater than or equal to four (including the initial synchronization symbol) for all minor versions.

The initial register state of the pseudo-noise sequence generator for a given bootstrap minor version within bootstrap_major_version = 0 shall be set to a value from Table 6.1 to signal the corresponding bootstrap_minor_version that is in use.

Table 6.1 Initial Register State (pseudo-noise seed) of the Pseudo-Noise Sequence Generator for each respective bootstrap_minor_version

$r_{init} = \{r_{l-1}, \dots, r_0\}$		
Bootstrap Minor Version	**Binary**	**Hexadecimal**
0	0000 0001 1001 1101	0x019D
1	0000 0000 1110 1101	0x00ED
2	0000 0001 1110 1000	0x01E8
3	0000 0000 1110 1000	0x00E8
4	0000 0000 1111 1011	0x00FB
5	0000 0000 0010 0001	0x0021
6	0000 0000 0101 0100	0x0054
7	0000 0000 1110 1100	0x00EC

Note: The pseudo-noise seeds in Table 6.1 were generated by first considering a representative set of pseudo-noise seeds from the overall total set of possible pseudo-noise seeds. For each pseudo-noise seed, a metric value was calculated by normalizing the maximum cross-correlation between the frequency-domain

sequence generated from the current pseudo-noise seed and the frequency-domain sequences generated from each of the other candidate pseudo-noise seeds with the maximum auto-correlation value for the frequency-domain sequence generated from the current pseudo-noise seed. The candidate pseudo-noise seeds with the minimum metric values were then selected as suitable initial register states for the pseudo-noise sequence generator due to exhibiting low cross-correlation.

6.1.1.1 Minor Version 0 Constraints and Signaling

When the value of r_{init} is set to 0x019D, indicating bootstrap_minor_version = 0, the number of symbols (N_S) in the bootstrap set shall be equal to four (including the initial synchronization symbol).

Bootstrap symbol 1 shall use the $N_b^1 = 8$ most significant signaling bits in order from most significant to least significant: $b_0^1\ b_1^1\ b_2^1\ b_3^1\ b_4^1\ b_5^1\ b_6^1\ b_7^1$. The syntax and semantics of the signaling fields for bootstrap symbol 1 shall be as given in Table 6.2 and the following text.

Table 6.2 Signaling Fields for Bootstrap Symbol 1

Syntax	No. of Bits	Format
bootstrap_symbol_1() {		
ea_wake_up_1	1	uimsbf
min_time_to_next	5	uimsbf
system_bandwidth	2	uimsbf
}		

The signaling fields for bootstrap symbol 1 are defined as follows.

ea_wake_up_1 –Bit 1 of emergency alert wake up field. Bit semantics are given in [2]

min_time_to_next – The minimum time interval to the next frame (B) that matches the same major and minor version number of the current frame (A), defined as the time period measured from the start of the bootstrap for frame A (referred to as bootstrap A) to the earliest possible occurrence of the start of the bootstrap for frame B (referred to as bootstrap B). Bootstrap B is guaranteed to lie within the time window beginning at the signaled minimum time interval value and ending at the next-higher minimum time interval value that could have been signaled. A **min_time_to_next** value of 31, corresponding to a minimum time value of 5700 ms, shall not be indicated. In the signal mapping formulas shown below, an example signaled value of X=10 would indicate that bootstrap B lies somewhere in a time window that begins 700 ms from the start of bootstrap A and ends 800 ms from the start of bootstrap A. The quantity is signaled via a sliding scale with increasing granularities as the signaled minimum time interval value increases.

system_bandwidth – Signals the system bandwidth used for the post-bootstrap portion of the current PHY layer frame. Values: 00 = 6 MHz, 01 = 7 MHz, 10 = 8 MHz, 11 = Greater than 8 MHz. The "Greater than 8 MHz" option facilitates future operation using a system bandwidth greater than 8 MHz, but is not intended to be used by the version described by the present signaling set. Receivers that are not provisioned to handle a system bandwidth greater than 8 MHz would not be expected to receive any frames where system_bandwidth = 11.

Let X represent the 5-bit value that is signaled, and let T represent the minimum time interval in milliseconds to the next frame that matches the same version number as the current frame.

$$T = \begin{cases} T = 50 \times X + 50 & 0 \le X < 8 \\ T = 100 \times (X - 8) + 500 & 8 \le X < 16 \\ T = 200 \times (X - 16) + 1300 & 16 \le X < 24 \\ T = 400 \times (X - 24) + 2900 & 24 \le X < 32 \end{cases}$$

See also Table 6.3.

Table 6.3 Minimum Time Interval to Next Frame of the Same Major and Minor Version

Index	Bit Value	Minimum Time Interval (ms)
0	00000	50
1	00001	100
2	00010	150
3	00011	200
4	00100	250
5	00101	300
6	00110	350
7	00111	400
8	01000	500
9	01001	600
10	01010	700
11	01011	800
12	01100	900
13	01101	1000
14	01110	1100
15	01111	1200
16	10000	1300
17	10001	1500
18	10010	1700
19	10011	1900
20	10100	2100
21	10101	2300
22	10110	2500
23	10111	2700
24	11000	2900
25	11001	3300
26	11010	3700
27	11011	4100
28	11100	4500
29	11101	4900
30	11110	5300
31	11111	Not Applicable

Bootstrap symbol 2 shall use the $N_b^2 = 8$ most significant signaling bits in order from most significant to least significant: $b_0^2\ b_1^2\ b_2^2\ b_3^2\ b_4^2\ b_5^2\ b_6^2\ b_7^2$. The syntax and semantics of signaling fields for bootstrap symbol 2 shall be as given in Table 6.4 and the following text.

Table 6.4 Signaling Fields for Bootstrap Symbol 2

Syntax	No. of Bits	Format
bootstrap_symbol_2() {		
ea_wake_up_2	1	uimsbf
bsr_coefficient	7	uimsbf
}		

The signaling fields for bootstrap symbol 2 are defined as follows.

ea_wake_up_2 – Bit 2 of emergency alert wake up field. Bit semantics are given in [2]

bsr_coefficient – Sample Rate Post-Bootstrap (of the current PHY Layer frame) = $(N + 16) \times 0.384$ MHz. N is the signaled value and shall be in the range from 0 to 80, inclusive. Values of 81 to 127 are reserved.

Bootstrap symbol 3 shall use the $N_b^3 = 8$ most significant signaling bits in order from most significant to least significant: $b_0^3\ b_1^3\ b_2^3\ b_3^3\ b_4^3\ b_5^3\ b_6^3 b_7^3$. The syntax and semantics of signaling fields for bootstrap symbol 3 shall be as given in Table 6.5 and the following text.

Table 6.5 Signaling Fields for Bootstrap Symbol 3

Syntax	No. of Bits	Format
bootstrap_symbol_3() {		
preamble_structure	8	uimsbf
}		

The signaling fields for bootstrap symbol 3 are defined as follows.

preamble_structure – This field establishes the capability to signal the structure of one or more RF symbols following the last bootstrap symbol. It is provided to enable such signaling by use of values defined by another Standard. Note: This Standard places no constraint on the contents of this field.

6.2 Future Major Versions

This section lists the Zadoff-Chu root (q) values that are permitted to be used to indicate future bootstrap_major_version values. The Zadoff-Chu root (q) values within the range 0 .. 136, 138 .. 1498 shall be Reserved.

Annex A: Example Method of Gray Code De-mapping at Receiver

A.1 GRAY CODE DE-MAPPING AT RECEIVER

Section 5.3.2 specifies a Gray code mapping of signaling bit values to a corresponding relative cyclic shift value for transmitter operation. This Annex describes an example method of de-mapping at the receiver from an estimated relative cyclic shift to estimated values of the corresponding signaling bits.

Let $\widehat{M}_n$ $(0 \leq \widehat{M}_n < N_{FFT})$ represent an estimated cyclic shift at the receiver for the *n*-th bootstrap symbol $(1 \leq n < N_S)$ relative to the estimated cyclic shift for the previous bootstrap symbol. Let $\widehat{M}_n$ be represented in binary form as $\widehat{m}_{10}^n\, \widehat{m}_9^n \ldots \widehat{m}_1^n\, \widehat{m}_0^n$. The signaling bit values expected by the receiver can be estimated as follows, where $\oplus$ represents the logical exclusive OR operator.

$$\hat{b}_i^n = \begin{cases} \widehat{m}_{10}^n & i = 0 \\ \widehat{m}_{11-i}^n \oplus \widehat{m}_{10-i}^n & 1 \leq i < N_b^n \\ 0 & N_b^n \leq i < 11 \end{cases}$$

A receiver is expected to decode only the N_b^n signaling bits for which it has been provisioned, even when the receiver is decoding a bootstrap symbol belonging to a later minor version within the same major version.

Annex B: Bootstrap Signaling Bit Robustness and Other Characteristics

B.1 GRAY CODE MAPPING EXAMPLES

One method for illustrating and investigating the Gray code mapping of bootstrap signaling bits to a relative cyclic shift (RCS) value, as described in Section 5.3.2, is to use representative examples.

B.1.1 Gray Code Mapping Example With Four Signaling Bits

In the first example, there are $N_b = 4$ signaling bits ($b_0 b_1 b_2 b_3$, from most significant to least significant) in the bootstrap symbol.

Table B.1.1 shows the mapping from all possible values of the four signaling bits to corresponding relative cyclic shifts, using the procedure described in Section 5.3.2. The four most-significant bits ($m_{10} m_9 m_8 m_7$) of the relative cyclic shift are calculated as a function of the signaling bit values, while the seven least-significant bits ($m_6 m_5 m_4 m_3 m_2 m_1 m_0$) of the relative cyclic shift remain constant for this particular example.

Table B.1.1 Example Mapping of Four Signaling Bits to Relative Cyclic Shifts

Signaling Bits (Binary) $b_0 b_1 b_2 b_3$	Relative Cyclic Shift (Binary) ($m_{10} \ldots m_0$)	Relative Cyclic Shift (Decimal) ($\tilde{M}$)
0 0 0 0	0 0 0 0 1 0 0 0 0 0 0	64
0 0 0 1	0 0 0 1 1 0 0 0 0 0 0	192
0 0 1 0	0 0 1 1 1 0 0 0 0 0 0	448
0 0 1 1	0 0 1 0 1 0 0 0 0 0 0	320
0 1 0 0	0 1 1 1 1 0 0 0 0 0 0	960
0 1 0 1	0 1 1 0 1 0 0 0 0 0 0	832
0 1 1 0	0 1 0 0 1 0 0 0 0 0 0	576
0 1 1 1	0 1 0 1 1 0 0 0 0 0 0	704
1 0 0 0	1 1 1 1 1 0 0 0 0 0 0	1984
1 0 0 1	1 1 1 0 1 0 0 0 0 0 0	1856
1 0 1 0	1 1 0 0 1 0 0 0 0 0 0	1600
1 0 1 1	1 1 0 1 1 0 0 0 0 0 0	1728
1 1 0 0	1 0 0 0 1 0 0 0 0 0 0	1088
1 1 0 1	1 0 0 1 1 0 0 0 0 0 0	1216
1 1 1 0	1 0 1 1 1 0 0 0 0 0 0	1472
1 1 1 1	1 0 1 0 1 0 0 0 0 0 0	1344

Table B.1.2 shows the mapping from relative cyclic shift values back to signaling bit values, using the information from Table B.1.1. The relative cyclic shifts in Table B.1.2 have been sorted into ascending order. As can be seen, the distance between adjacent relative cyclic shifts in this example is 128, and in this case each relative cyclic shift can be incorrectly estimated at the

receiver with a tolerance of up to ± 63 without causing an error in the recovery of the signaling bit values.

In general, when N_b signaling bits are in use within a particular bootstrap symbol, the distance between adjacent relative cyclic shifts will be 2^{11-N_b} and the maximum error tolerance in the relative cyclic shift estimation at a receiver will be $\pm(2^{10-N_b} - 1)$. That is, the relative cyclic shift signaled by a bootstrap symbol can be incorrectly estimated at a receiver by up to $\pm(2^{10-N_b} - 1)$, while still allowing all of the correct signaling bit values for that bootstrap symbol to be recovered.

When the number of signaling bits is $N_b = 7$, the distance between adjacent relative cyclic shifts will be 16 and the maximum error tolerance in the relative cyclic shift estimations at a receiver will be ± 7. Similarly, when the number of signaling bits is $N_b = 8$, the distance between adjacent relative cyclic shifts will be 8 and the maximum error tolerance in the relative cyclic shift estimations at a receiver will be ± 3.

Finally, examination of the signaling bit values in the rightmost column of Table B.1.2 (which have been ordered by their corresponding relative cyclic shift values) clearly illustrates the Gray code mapping, as only one bit position at a time changes value from one row to the next.

Table B.1.2 Example Mapping of Relative Cyclic Shifts to Four Signaling Bits

Relative Cyclic Shift (Decimal)	Relative Cyclic Shift (Binary) ($m_{10} \ldots m_0$)	Signaling Bits (Binary) ($b_0 b_1 b_2 b_3$)
64	0 0 0 0 1 0 0 0 0 0 0	0 0 0 0
192	0 0 0 1 1 0 0 0 0 0 0	0 0 0 1
320	0 0 1 0 1 0 0 0 0 0 0	0 0 1 1
448	0 0 1 1 1 0 0 0 0 0 0	0 0 1 0
576	0 1 0 0 1 0 0 0 0 0 0	0 1 1 0
704	0 1 0 1 1 0 0 0 0 0 0	0 1 1 1
832	0 1 1 0 1 0 0 0 0 0 0	0 1 0 1
960	0 1 1 1 1 0 0 0 0 0 0	0 1 0 0
1088	1 0 0 0 1 0 0 0 0 0 0	1 1 0 0
1216	1 0 0 1 1 0 0 0 0 0 0	1 1 0 1
1344	1 0 1 0 1 0 0 0 0 0 0	1 1 1 1
1472	1 0 1 1 1 0 0 0 0 0 0	1 1 1 0
1600	1 1 0 0 1 0 0 0 0 0 0	1 0 1 0
1728	1 1 0 1 1 0 0 0 0 0 0	1 0 1 1
1856	1 1 1 0 1 0 0 0 0 0 0	1 0 0 1
1984	1 1 1 1 1 0 0 0 0 0 0	1 0 0 0

Figure B.1.1 shows the values of the four signaling bits as a function of the estimated relative cyclic shift value in a graphical form. This diagram uses the information from Table B.1.2.

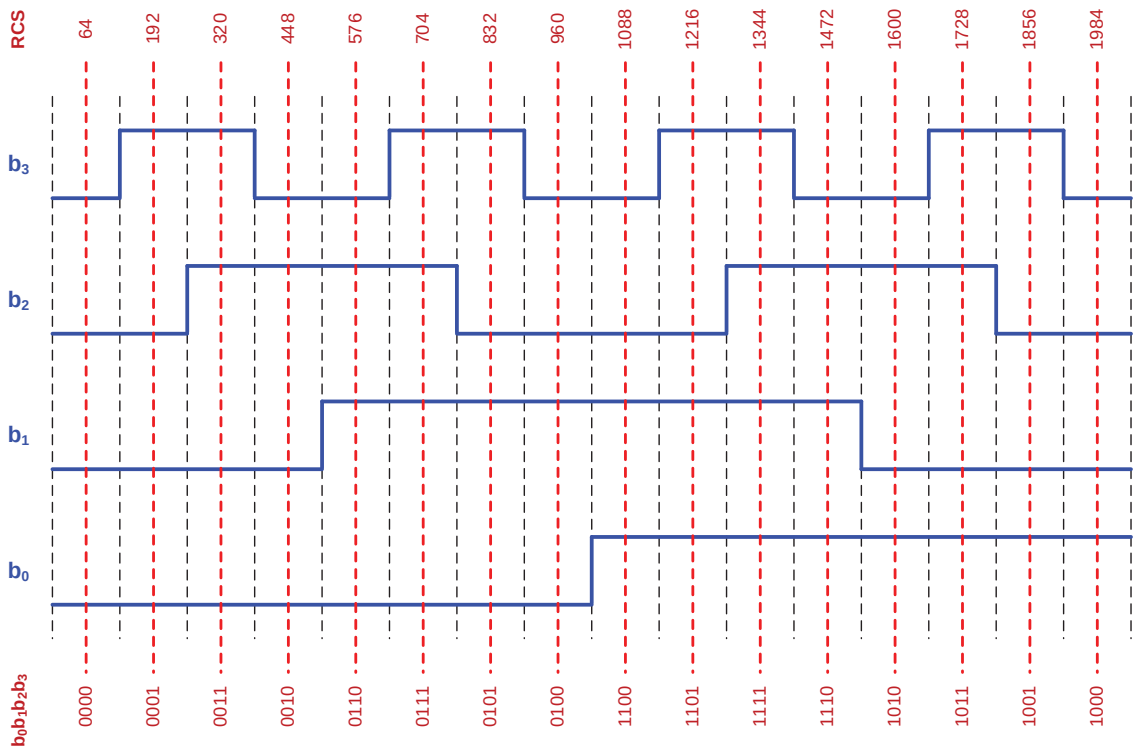

Figure B.1.1 Example Gray code mapping with four signaling bits

B.1.2 Gray Code Mapping Example with Three Signaling Bits

In the second example, there are $N_b = 3$ signaling bits ($b_0 b_1 b_2$, from most significant to least significant) in the bootstrap symbol.

Table B.1.3 shows the mapping from all possible values of the three signaling bits to corresponding relative cyclic shifts, using the procedure described in Section 5.3.2. The three most-significant bits ($m_{10} m_9 m_8$) of the relative cyclic shift are calculated as a function of the signaling bit values, while the eight least-significant bits ($m_7 m_6 m_5 m_4 m_3 m_2 m_1 m_0$) of the relative cyclic shift remain constant for this particular example.

Table B.1.3 Example Mapping of Three Signaling Bits to Relative Cyclic Shifts

Signaling Bits (Binary) $b_0 b_1 b_2$	Relative Cyclic Shift (Binary) ($m_{10} \ldots m_0$)	Relative Cyclic Shift (Decimal) ($\tilde{M}$)
0 0 0	0 0 0 1 0 0 0 0 0 0 0	128
0 0 1	0 0 1 1 0 0 0 0 0 0 0	384
0 1 0	0 1 1 1 0 0 0 0 0 0 0	896
0 1 1	0 1 0 1 0 0 0 0 0 0 0	640
1 0 0	1 1 1 1 0 0 0 0 0 0 0	1920
1 0 1	1 1 0 1 0 0 0 0 0 0 0	1664
1 1 0	1 0 0 1 0 0 0 0 0 0 0	1152
1 1 1	1 0 1 1 0 0 0 0 0 0 0	1408

Table B.1.4 shows the mapping from relative cyclic shift values back to signaling bit values, using the information from Table B.1.3. The relative cyclic shifts in Table B.1.4 have been sorted into ascending order. As can be seen, the distance between adjacent relative cyclic shifts in this

example is 256, and in this case each relative cyclic shift can be incorrectly estimated at the receiver with a tolerance of up to ± 127 without causing an error in the recovery of the signaling bit values.

Table B.1.4: Example Mapping of Relative Cyclic Shifts to Three Signaling Bits

Relative Cyclic Shift (Decimal)	Relative Cyclic Shift (Binary) ($m_{10} \ldots m_0$)	Signaling Bits (Binary) ($b_0 b_1 b_2 b_3$)
128	0 0 0 1 0 0 0 0 0 0	0 0 0
384	0 0 1 1 0 0 0 0 0 0	0 0 1
640	0 1 0 1 0 0 0 0 0 0	0 1 1
896	0 1 1 1 0 0 0 0 0 0	0 1 0
1152	1 0 0 1 0 0 0 0 0 0	1 1 0
1408	1 0 1 1 0 0 0 0 0 0	1 1 1
1664	1 1 0 1 0 0 0 0 0 0	1 0 1
1920	1 1 1 1 0 0 0 0 0 0	1 0 0

Figure B.1.2 shows the values of the three signaling bits as a function of the estimated relative cyclic shift value in a graphical form. This diagram uses the information from Table B.1.4.

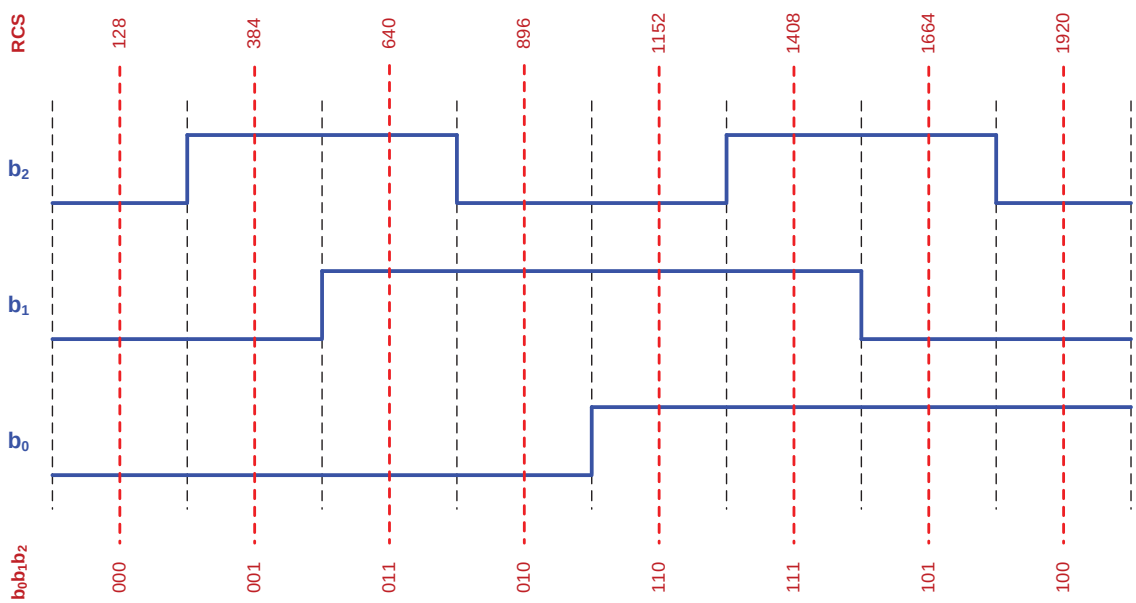

Figure B.1.2: Example Gray code mapping with three signaling bits

B.2 ADDITIONAL OBSERVATIONS ON BOOTSTRAP SIGNALING BITS

One key point to notice from Figure B.1.1 and Figure B.1.2 is that the mapping from a particular relative cyclic shift value to signaling bit values $b_0 b_1 b_2$ is exactly the same for the cases of four signaling bits (Figure B.1.1) and three signaling bits (Figure B.1.2), respectively. This implies that regardless of the number of signaling bits carried by a bootstrap symbol, an individual signaling bit value for a particular signaling bit index will always be the same for a given relative cyclic shift value. For example, b_0 will always be 0 if the relative cyclic shift is in the range $0 \leq \text{RCS} \leq 1023$ or 1 if the relative cyclic shift is in the range $1024 \leq \text{RCS} \leq 2047$, and so on for the other signaling

bit indices, regardless of how many signaling bits are carried by the corresponding bootstrap symbol.

Another robustness consideration is that different signaling bits have different levels of robustness based on the signaling bit index within a bootstrap symbol, with b_k being more robust than b_m when $k < m$. As an illustration of this property, consider the example shown in Figure B.1.2. If an error of ± 128 in the estimation of the relative cyclic shift is made at a receiver, then the value of b_2 will be incorrectly estimated 100% of the time. Conversely, if the same estimation error (± 128) of the relative cyclic shift is incurred and all of the eight possible relative cyclic shifts at the transmitter are equally probable, then the value of b_0 will be incorrectly estimated only 25% of the time.

Coupling the finding of the preceding paragraph with the earlier observation of the maximum error tolerance in the estimation of the relative cyclic shift at a receiver results in the following. When N_b signaling bits are in use within a particular bootstrap symbol, the value of signaling bit b_k will be incorrectly estimated $100/2^{N_b-k-1}$ % of the time when an error of $\pm 2^{10-N_b}$ is made in the relative cyclic shift estimation at the receiver.

B.3 IMPACT OF ERRORS IN THE ESTIMATION OF BOOTSTRAP SIGNALING BIT VALUES AT A RECEIVER

Although different signaling bits within a bootstrap symbol will have different relative levels of robustness, a single bit error when estimating the bootstrap signaling bit values at a receiver will likely cause problems with either decoding the immediately following frame or correctly locating the time window containing the next bootstrap of the same major/minor version. A brief discussion of the effect of estimating an incorrect value for each of the bootstrap signaling fields follows.

- **ea_wake_up_1** and **ea_wake_up_2**
  - The values of these two signaling bits can indicate one of four possible states. One of these states represents a "negative" state where no emergency alert information is available. The other three states represent "positive" states where some form of emergency alert information is available.
  - If **ea_wake_up_1** and **ea_wake_up_2** currently indicate that no emergency alert information is available (i.e. currently in the negative state):
    - A false positive condition would result if **ea_wake_up_1** and/or **ea_wake_up_2** were decoded incorrectly. In this situation a receiver would incorrectly conclude that emergency alert information was available. The receiver would search for that emergency alert information, but would be unable to find it. If the receiver then correctly decoded **ea_wake_up_1** and **ea_wake_up_2** in subsequent bootstraps, the receiver would likely conclude that it had encountered a false positive.
  - If **ea_wake_up_1** and **ea_wake_up_2** currently indicate that emergency alert information is available (i.e. currently in a positive state):
    - A false negative condition would result if **ea_wake_up_1** and **ea_wake_up_2** were decoded incorrectly to indicate that emergency alert information was not available (i.e. that the current emergency alert was over). In this situation a receiver would incorrectly conclude that the current emergency alert was over. If the receiver then correctly decoded **ea_wake_up_1** and **ea_wake_up_2** in subsequent bootstraps, the receiver would likely conclude that a new

emergency alert was beginning. Higher layers would be responsible for the exact handling of this situation, but in the worst case the end user would receive a duplicate warning of a previously-dismissed emergency alert.

    - A false positive condition would result if **ea_wake_up_1** and **ea_wake_up_2** were decoded incorrectly to indicate that a different set of emergency alert information was available. In this situation a receiver would likely attempt to receive that "new" emergency alert information and present it to the end user. If the receiver then correctly decoded **ea_wake_up_1** and **ea_wake_up_2** in subsequent bootstraps, the receiver would likely conclude that further "new" emergency alert information was available, and would thus receive that "new" information and present it to the end user. In the worst case, the end user would receive one or two duplicate warnings of a previously-dismissed emergency alert.

  - The other situation that could arise is if a receiver incorrectly decoded **ea_wake_up_1** and **ea_wake_up_2** in the exact same frame as a state change in the values of **ea_wake_up_1** and **ea_wake_up_2** occurred. Note that the incorrect decoding of **ea_wake_up_1** and **ea_wake_up_2** would typically be a very rare event, and hence this particular situation (an incorrect decoding coinciding with a state change) would be an extremely rare (i.e. highly improbable) event.
    - If the receiver incorrectly decoded **ea_wake_up_1** and **ea_wake_up_2** to interpret either a negative state (i.e. no emergency alert information is present) or a continuation of the previous positive state (i.e. **ea_wake_up_1** and **ea_wake_up_2** were incorrectly decoded to be equal to their previous values), but **ea_wake_up_1** and **ea_wake_up_2** were decoded correctly in a subsequent bootstrap, then there would be a slight delay (e.g. equal to one frame length) in presenting the new emergency alert to the end user.
    - If the receiver incorrectly decoded **ea_wake_up_1** and **ea_wake_up_2** to interpret a positive state that was different from the previous positive state, then the receiver would decode and present the new emergency alert information (which is the desired action), despite the incorrect decoding.

- **min_time_to_next**
  - Incorrectly recovering the minimum time interval to the next bootstrap of the same major/minor version might result in a receiver using an incorrect time window to search for the next bootstrap of the same major/minor version. If the frame (e.g. preamble) contains additional control signaling indicating when the next bootstrap or frame begins and the receiver actively receives at least the preamble of the frame, then this error would be recoverable. Alternatively, the receiver might need to resync and perform a new initial scan for a bootstrap.
- **system_bandwidth**
  - Incorrectly recovering the **system_bandwidth** value would result in a receiver being unable to correctly decode the immediately following frame. An intelligent receiver might be able to recover the frame if the receiver had cached previously-received **system_bandwidth** values for bootstraps of the same major/minor version for the same RF channel, since it is unlikely that this information would change dynamically.
- **bsr_coefficient**

- Incorrectly recovering the **bsr_coefficient** would result in a receiver being unable to correctly decode the immediately following frame.

- **preamble_structure**
  - Incorrectly recovering the **preamble_structure** would result in a receiver being unable to correctly decode the preamble of the immediately following frame, and hence the payload contents of that same frame would also be non-recoverable.

-- End of document --

<u>Attachment B</u>

Meintel, Sgrignoli, & Wallace, LLC,
A Report To The Federal Communications Commission Regarding Laboratory Testing of Recent Consumer DTV Receivers With Respect To ATSC 1.0 and ATSC 3.0 DTV Interference **(April 8, 2016)**

A Report To The Federal Communications Commission Regarding Laboratory Testing of Recent Consumer DTV Receivers With Respect To ATSC 1.0 and ATSC 3.0 DTV Interference

April 8, 2016

1282 Smallwood Drive
Suite 372
Waldorf, MD 20603

1. EXECUTIVE SUMMARY

Pearl Mobile DTV, LLC (**Pearl**) retained Meintel, Sgrignoli, and Wallace (**MSW**) to implement laboratory legacy digital television (DTV) receiver *interference* performance testing in order to compare the interference effects from both the ATSC 1.0 (ATSC1) transmission system and the newly-proposed ATSC 3.0 (ATSC3) transmission system, which uses Coded Orthogonal Frequency Domain (COFDM) modulation. The primary goal was to verify that the current ATSC1 and the new ATSC3 transmission signals can co-exist in the field while still using the current FCC planning factors referenced in their rules. The results of this laboratory test did, in fact, confirm that both ATSC1 and ATSC3 transmission signals can be accommodated in shared spectrum using the current FCC planning factors as embodied in the FCC OET Bulletin 69, with the caveat that the same FCC emission mask requirement is met at the transmitter. Therefore, channel allocation and interference analysis can be conducted using the same existing interference D/U ratios. No ATSC3 receiver interference performance was tested.

The tests were performed in the **MSW** laboratory facility (see **Appendix A**) in **December 2015** using 6 consumer DTV receivers (5 flat-screen DTV sets plus 1 DTV converter box). The selected DTV sets represented a significant majority of the shipments in the U.S. during the period between **2012** and **2015** while the coupon eligible converter box (CECB) was **2008** vintage (just before the full-power analog turn-off in **June 2009**). Six areas of testing were part of the laboratory test plan matrix (see **Appendix B**), with **243** individual tests performed. The test bed consisted of high-quality laboratory RF sources and measurement test equipment in various configurations (see **Appendix C**). **MSW** performed the tests using industry-standard practices.

General ATSC1 performance tests (signal dynamic range, added white noise threshold, peak-to-average power ratio) were performed on UHF CH 26 for all 6 consumer DTV receivers in addition to *interference* performance tests (co-channel and first adjacent channel). Important references for this testing were the ATSC A/74 "Recommended Practice" document[1] ("A/74") and the FCC OET test report of 2007[2] ("Martin 2007").

This **Pearl** laboratory test evaluated the interference rejection capability of modern ATSC1 consumer sets in what might be expected during post-spectrum auction implementation of ATSC3 in an repacked ATSC1 environment. Interference sources included ATSC1 (8-VSB) DTV test signals and four subsets of ATSC3 (COFDM) DTV test signals (see **Appendix B**). Four different ATSC3 pseudo-random interference test signals were created in order to provide a diversity of transmission modulation types that generally represent the flexible ATSC3 standard. The goal was to provide diversity in the number of COFDM subcarriers (32k, 16k, 8k) and modulation types (64-QAM, 256-QAM) that might represent a variety of future applications that allow tradeoffs between robustness and data rate in typical broadcast deployments.

All test signals (see **Appendix D**) occupied one 6 MHz RF channel, and their signal levels were defined and determined by measuring *average* power within a 6 MHz bandwidth. The occupied bandwidth of the ATSC3 COFDM signal spectrum is slightly wider than the ATSC1 8-VSB signal spectrum, but still fits within the existing FCC-allocated 6 MHz channel. When the total 6 MHz average power is made identical for the two signals, the ATSC3 signal has slightly lower power *density* within the central part of the desired channel when compared to ATSC1. This results in slightly less interference than for the

[1] "A/74:2010, ATSC Recommended Practice: Receiver Performance Guidelines", ATSC, April 7, 2010.

[2] Stephen R. Martin, "Interference Rejection Thresholds of Consumer Digital Television Receivers Available in 2005 and 2006", OET Report Prepared by: FCC/OET 07-TR-1003, March 30, 2007.

ATSC1 case. However, unmodified ATSC3 signals inherently have higher peak-to-average power ratio (PAPR) and crest factor (CF) values than ATSC1 signals due to the use of COFDM, which can possibly cause slightly more interference than ATSC1 interference signals. As a practical matter, transmitter manufacturers will employ a PAPR/CF reduction scheme in order to facilitate better transmitter efficiency. Therefore, a PAPR/CF-reduction scheme was employed and evaluated in this laboratory test for all four ATSC3 interference test signals[3]. It is anticipated that very similar results would be obtained for all ATSC3 modes.

For the laboratory test, both ATSC1 and ATSC3 interference signals had first adjacent channel splatter well below that allowed by the FCC emission mask due to the use of low-power commercial and laboratory-grade test generators in conjunction with a narrowband band-stop filter, and provided a test bed dynamic range that allowed testing well beyond the expected D/U interference ratios required to be measured (see **Appendix E**).

From the test results (see **Appendix F**), the 6 consumer DTV receivers exhibited very good performance and the results correlated well when compared to A/74 guidelines in terms of their dynamic range as well as in the presence of white noise impairment and signal interference.

General tests verified proper operation and performance of all 6 DTV test receivers. Dynamic range (based on overload and sensitivity results), added white Gaussian noise threshold, and computed receiver noise figure all met or exceeded the ATSC A/74 guidelines as well as the FCC's OET Bulletin 69 planning factors. Additionally, measurements revealed a reduced difference in the crest factor between ATSC1 and CF-reduced ATSC3 signals.

Co-channel interference tests were performed at a single moderate desired signal level of -53 dBm. These test results verified that the ATSC1-into-ATSC1 legacy DTV co-channel interference threshold met the 15 dB FCC service planning factor value (i.e., same value as the approximate white noise threshold). The test results additionally demonstrate that the ATSC3-into-ATSC1 co-channel interference threshold was comparable to the ATSC1-into-ATSC1 threshold. This result indicates that the existing co-channel FCC planning factor value of 15 dB can be applied to both ATSC1-into-ATSC1 and ATSC3-into-ATSC3 interference planning scenarios.

First adjacent channel interference tests for ATSC1 and ATSC3 were performed at three desired signal levels: strong (-28 dBm), moderate (-53 dBm), and weak (-68 dBm). None of the adjacent channel tests performed at a strong desired signal level reached error threshold at the maximum test signal level (due to the limitation in undesired power levels that may damage the receivers). For moderate and weak desired signal levels, ***both*** ATSC1 and ATSC3 first adjacent channel interference test results are *much* better than the ATSC- recommended value of -33 dB, which has a 6 dB margin built-in to this values that accounts for DTV transmitter intermodulation products (i.e., sideband distortion splatter) just meeting the FCC rigid emission mask[4] [5]. This result would also indicate that the existing upper and lower adjacent channel interference FCC planning factors can be applied to both the ATSC1-into-ATSC1 and ATSC3-into-ATSC1 adjacent channel interference planning scenarios.

---

[3] An ATSC3 PAPR/CF-reduction technique from Coherent Logix was implemented as an all-pass filtering method applied at the IFFT output as a means of reducing RF peak excursion in an OFDM system. This approach was adopted over others in literature based on the following design criteria: (1) no side information is required to be sent to the receiver, with the resulting signal modification perceived as a channel effect is easily compensated by the equalizer, (2) the ATSC3 receiver has limited complexity (e.g. no need for multiple IFFTs), and (3) there is no reduction in data rate.

[4] FCC 47CFR 73.622(h).

[5] "IEEE Recommended Practice for Measurement of 8-VSB Digital Television Transmission Mask Compliance for the USA", RF Standards Committee G-2.2, Page 8-9, IEEE, August 9, 2006.

The **Pearl** 2015 tests were designed to isolate the receiver D/U performance from imperfect transmitter processing effects while still allowing a good comparison to be made between ATSC1 and ATSC3 interference. As a result, all desired and undesired test signals were essentially ideal and consequently pristine in nature, with minimal in-band distortion and minimal first adjacent channel transmitter sideband distortion splatter (i.e., intermodulation product emissions). Therefore, care must be taken in *directly* applying these specific D/U threshold laboratory test results to any adjacent-channel planning factors used in the spectrum allocation process since typical high-power transmitter splatter was absent from interfering signals. As with existing ATSC1 signal transmission, an output Emission Mask Filter will continue to be required for ATSC3 signal transmissions in order to limit out-of-band emissions in neighboring spectrum, particularly first adjacent channels. Based upon these laboratory test results, the *same* emission mask requirements[6] should be applied to both ATSC1 and ATSC3 transmissions.

Therefore, as the data above illustrates, interference effects for ATSC1 and ATSC3 were found to be comparable in these laboratory tests. Consequently, no change is needed to the OET Bulletin 69 for the new ATSC3 transmission system, therefore allowing both ATSC1 and ATSC3 signals to co-exist using current FCC interference planning factors with the caveat that the same Emission Mask Filter performance is maintained.

[6] FCC 47CFR 73.622(h).

2. BACKGROUND INFORMATION

Pearl TV is a partnership of U.S. broadcast companies with a shared interest in exploring forward-looking broadcasting opportunities, including innovative ways of promoting local broadcast TV content and developing digital media and wireless platforms for the broadcast industry[7]. The firm of Meintel, Sgrignoli, and Wallace (**MSW**) was contacted by **Pearl** regarding this laboratory test project as part of **Pearl's** planning for the deployment of ATSC3 transmissions and services. **Pearl** asked **MSW** to create a test plan for DTV laboratory transmission interference testing of recent legacy DTV receivers. These tests were performed in the **MSW** laboratory using a sampling of recent popular legacy Advanced Television System Committee (ATSC) consumer digital television (DTV) receivers that have been on the market for the last few years to determine interference effects caused by the newly-proposed ATSC 3.0 transmission system. The specific consumer DTV receiver brands and model numbers of the units tested are *not* identified in this laboratory test report. Rather, they are referenced generically by unique designations (numbers 1 through 6) and described only generally (e.g., by screen size and display type, if applicable, and model year).

Generally, the scope of work (SOW) requested by **Pearl** was to perform *conducted* (as opposed to radiated) laboratory RF interference tests on current DTV receivers using a calibrated test bed, followed by careful data analysis and creation of a detailed written report. Specifically, the purpose of the test was to measure and analyze RF **co-channel** and **first adjacent channel** interference performance referenced in the ATSC A/74 document[8] and similarly described in a Federal Communications Commission (**FCC**) laboratory test document[9]. The goal was to compare current consumer ATSC 1.0 (**ATSC1**) terrestrial DTV receiver interference performance in the presence of other current legacy ATSC 1.0 DTV transmission signals with that of the newly-proposed ATSC 3.0 (**ATSC3**) DTV transmission system signals. With this test data, a determination could then be made regarding the ability of ATSC1 and ATSC3 signals to both utilize the existing FCC OET-69 spectrum planning factors.

The current ATSC1 transmission system[10] is based on the single-carrier 8-VSB modulation scheme while the proposed ATSC3 transmission system[11] is based on the multi-carrier COFDM modulation scheme. The results will be useful in determining interference effects to current consumer DTV receivers found in viewers' homes during a transition to the new television system when both ATSC1 and ATSC3 signals are likely to co-exist in the field, particularly after a spectrum repack following the **2016**-scheduled 600 MHz Spectrum Incentive Auctions.

---

[7] Its membership, comprising 170 network-affiliated TV stations, consists of nine of the largest broadcast companies in America including: Cox Media Group, the E.W. Scripps Company, TEGNA. Inc., Graham Media Group, Hearst Television Inc., Media General Inc., Meredith Local Media Group, Schurz Communications and Raycom Media. Together, the Pearl TV companies reach 111 million households representing 63% of the U.S. population and serve 43 of the top 50 U.S. markets. Pearl TV is directly involved in the process to adopt and implement the next generation broadcast television transmission standard in the U.S.

[8] *"ATSC Recommended Practice: Receiver Performance Guidelines"*, A/74:2010, April 7, 2010.

[9] "*Interference Rejection Thresholds of Consumer Digital Television Receivers Available in 2005 and 2006*", OET Report Prepared by: FCC/OET 07-TR-1003, March 30, 2007.

[10] "ATSC Digital Television Standard: Part 2 – RF/Transmission System Characteristics", Doc A/53, Part 2:2007, January 3, 2007, www.atsc.org.

[11] See ATSC Candidates Standards: A/321 Part 1 System Discovery and Signaling (9/6/15), and A/322 Physical Layer Protocol (9/28/15), www.atsc.org.

This laboratory test utilized *some* of the concepts found in both the aforementioned ATSC A/74 and the Martin documents. However, these two documents were only used as general *guidelines*; the **Pearl** test plan did not call for duplicating all of these RF tests, but rather a small subset that was relevant to the determination of FCC interference planning factors.

Specifically, the specific **Pearl** laboratory test plan formulated by **MSW** included:

(1) General baseline performance of legacy ATSC1 television performance parameters such as sensitivity threshold, overload threshold, added white noise threshold, in-band peak-to-average power ratio (PAPR) and crest factor (CF) characterization, and out-of-band spectral energy.

(2) Co-channel and first adjacent channel interference performance of legacy ATSC1 DTV receivers in the presence of other ATSC1 legacy DTV signals, i.e., ATSC1-into-ATSC1.

(3) Co-channel and first adjacent channel interference performance of legacy ATSC1 DTV receivers in the presence of various selected transmission-parameter subsets of the recently-proposed ATSC3 DTV signals, i.e., ATSC3-into-ATSC1.

(4) Co-channel and first adjacent channel interference performance *comparison* of the current ATSC1 DTV system and the proposed ATSC3 system.

The test plan called for measurements on 6 production DTV receivers: 5 DTV flat-screen television sets and 1 set top Coupon Eligible Converter Box (CECB) unit. The testing was to be performed in a fully-equipped and carefully-calibrated **MSW** laboratory by **MSW** test engineers following a specific test matrix. Four different ATSC3 prototype test signals (with various transmission parameters[12]) were created in software by Coherent Logix, Inc. (**Coherent**) in Austin, TX, and then played back using an instrument-grade test signal generator. The DTV television receivers that were laboratory tested were obtained by **MSW** for **Pearl**, being purchased at local television retail stores and shipped to the laboratory testing location (the older CECB unit has been in **MSW's** possession since **2008**).

The results from this receiver testing provide pertinent information to **Pearl** regarding the comparison *interference* properties between the current ATSC1 transmission system and the proposed ATSC3 transmission system. The test results also provide insight into future deployment of the new ATSC3 transmission system and its ability to comply with FCC regulations in terms of power and spectrum efficiency as well as service area. The information learned in this laboratory interference test can also complement results of any future field test(s) of the new DTV transmission system, and therefore will be useful to the FCC and the broadcast industry regarding system performance in field conditions that may occur after spectrum repacking.

3. DEVICES UNDER TEST

Five of the six devices under test (DUT) were relatively recent popular consumer flat-screen ATSC1 DTV receivers with internal over-the-air (OTA) tuners while one of the receivers was an older coupon eligible converter box (CECB) employed as part of the federal government's **2009** DTV transition program. These legacy consumer units were purchased through local retail stores.

[12] An ATSC3 PAPR/CF-reduction technique from Coherent Logix was implemented as an all-pass filtering method applied at the IFFT output as a means of reducing RF peak excursion in an OFDM system. This approach was adopted over others in literature based on the following design criteria: (1) no side information is required to be sent to the receiver, with the resulting signal modification perceived as a channel effect easily compensated by the equalizer, (2) the ATSC3 receiver has limited complexity (e.g. no need for multiple IFFTs), and (3) there is no reduction in data rate.

These receivers represent DTV sets that were popular with consumers between **2012** and **2015**, having substantial sales that represent a significant majority of the sets sold in the U.S. during the last few years, and therefore characterize reasonably well the population of DTV sets in the market at present. The one CECB unit is a set-top box (STB) sold essentially during **2008** and **2009**, around the time of the full-power television station analog turn-off (**June 17, 2009**), and is therefore indicative of RF performance of older legacy consumer receivers from that time period.

In the past[13], manufacturers have stated that the same tuner/demodulator design is often used in all models in a given model year[14], regardless of flat-panel display size. So, for example, a 23" model would use the same tuner design as that of the manufacturer's 60" model (or larger). Therefore, these DTV sets used in this laboratory test are also representative of the largest models available during the last few years.

See **Table 1** below for a list of the 6 DTV receivers used in the testing.

Table 1 DUT receivers and their performance testing.

DUT #	DUT Screen Description	Screen Size	Model Year
1	CECB Set-Top Box	N.A.	2008
2	LED	39"	2012 - 2015
3	LED	32"	2012 - 2015
4	LED	46"	2012 - 2015
5	LED	32"	2015
6	LED	40"	2015

Note: Manufacturer names of all DTV receivers ***not*** specified in this report.

After unpacking the individual DTVs and applying AC power, basic operation was quickly verified to insure that no DTV set damage occurred in shipping. The laboratory test bed was then calibrated and documented, followed by channel scanning of the DTV sets while exposed to the desired ATSC1 DTV channel (i.e., CH 26). Device testing began shortly thereafter.

The specific test matrix is described in the next section.

4. TEST PLAN

4.1. Overview

Pearl and **MSW** jointly developed a laboratory test plan, and **MSW** implemented it in their laboratory (**Figure A-1**). A test matrix (**Table B-1**) was created summarizing all **243** tests that were performed, documented, analyzed, and is included in this written test report.

The test plan called for **MSW** to perform calibrated conducted (rather than radiated) RF reception tests on legacy ATSC1 consumer DTV sets with ATSC-compatible over-the-air receivers using a single desired UHF channel (CH 26). The ATSC A/74 document was used only as a *guideline* for testing, and

[13] See Consumer Electronics Association, written *ex parte* presentation in *GN Docket No. 12-268* and *ET Docket 14-14* attachment "Recent Consumer DTV Receivers With Respect To TV & LTE Interference", Meintel, Sgrignoli, and Wallace (Gary Sgrignoli), May 22, 2014.

[14] An exception to this rule is when the brand uses more than one manufacturer in a given model year.

was not used as a specific test plan. The testing conducted in this case was a subset of the A/74 document. **Pearl** agreed to the inclusion in the test plan of general DTV receiver performance tests (sensitivity, overload, added white noise threshold, peak-to-average power ratio) as well as interference tests (co-channel, first adjacent channel) for both ATSC1-into-ATSC1 and ATSC3-into-ATSC1. While the desired (D) DTV signal was always a typical (8-VSB) ATSC1 signal on UHF CH 26, the undesired (U) DTV interference signals were either a single ATSC1 (8-VSB) signal or a single ATSC3 (COFDM) signal using one of four sets of transmission parameters (**Table B-2**).

All test signals were placed in a 6 MHz RF channel, and their signal levels were determined by measuring average power in a 6 MHz bandwidth. Since the ATSC3 (COFDM) signal bandwidth (≈5.7 MHz) was slightly higher than the ATSC1 (8-VSB) signal bandwidth (≈5.4 MHz), setting the total integrated 6 MHz average signal power for both signals to the same value in 6 MHz means that the power ***density*** across the ATSC1 equivalent noise bandwidth (≈5.4 MHz) would be slightly less (≈0.25 dB) for the ATSC3 signal. This bandwidth difference, as it exists in the 6 MHz average power measurement methodology, has a slight effect in the interference capability of ATSC3 signals, tending to decrease the natural ATSC3 interference threshold slightly by about 0.25 dB. However, the higher signal peaks tend to increase the natural ATSC3 interference threshold. The ultimate ATSC3 interference threshold measured for each of the four selected ATSC3 signals, which was very close to the ASC1 value, is described in the test results section of this report.

The interference performance *metric* for these laboratory tests was the ratio of the desired (D) average signal power level to the undesired (U) average signal power level, referred to as D/U. Each D/U measurement was taken at a threshold of video (TOV) error point, i.e., where video packet errors were just visible to the viewer (i.e., the test engineer).

The video test pattern used for the *desired* ATSC1 DTV signal in all of these laboratory tests was a moving high definition (1920 x 1080i) recorded video segment called "**Eggplant Parmesan**" from an off-air cooking show. Using a moving high definition picture uses more MPEG packets, and thus allows the tester a better chance of seeing small numbers of transmission errors. The "video" test pattern used for the *undesired* ATSC1 and ATSC3 signals in all of these laboratory tests was a pseudo-random sequence (PRS). These types of interference test signals were used as a practical example of a noise-like, flat-spectrum interfering DTV signal.

All testing was performed on a 50-Ohm test bed, except at the final outputs to the consumer ATSC1 DTV sets, which were converted to 75-Ohms to match the nominal input impedances of their RF tuners. The RF tests were all performed with an unimpaired (i.e., "clean" ATSC signal with ≥ 40 dB SNR) desired ATSC1 DTV signal on physical CH 26 (545 MHz center frequency) at a 6 MHz average power level of either strong (-28 dBm), moderate (-53 dBm), or weak (-68 dBm). That is, the desired DTV source signal did not have any added linear distortion (e.g., non-flat amplitude or non-flat group delay response or propagation-induced multipath) or non-linear distortion (e.g., RF carrier phase noise, AM/AM, AM/PM, or 3rd order intermodulation). The only impairments added to the desired DTV signal during testing were white Gaussian noise (only in one of the general tests), undesired ATSC1 DTV interference signals, or undesired ATSC3 interference signals.

The undesired interference signals were also considered "clean" in that they did not have the usual non-linear-induced third order intermodulation (IM3) energy that causes DTV splatter to occur in adjacent channels in practical commercial-grade transmitter equipment. Therefore, the DTV interference results obtained in this laboratory test are focused only on *internal* DTV receiver performance (e.g., front-end tuner). In field applications with high-power transmitters employed, this level of performance is reduced due to the presence of non-linear-induced transmitter splatter that accompanies the received signal. While commercial transmitters typically employ non-linear correction algorithms with good success,

they are not perfect, and therefore do not completely remove all the adjacent channel splatter energy. As a practical matter, most digital television transmitters utilize an emission mask filter at the transmitter output to limit out-of-band emissions into adjacent channels, and to comply with the rigid FCC Emission Mask requirements. It is anticipated that this practice will continue with ATSC3 transmitters. Consequently, as demonstrated herein, the limit on interference to adjacent channel stations is established by the Emission Mask.

Interference tests were performed with individual ATSC1 and ATSC3 interference signals on CH 25 (lower first adjacent), CH 26 (co-channel), and CH 27 (upper first adjacent) with the desired ATSC1 DTV signal always on CH 26. All desired and undesired signal and noise power measurements were made over the entire FCC-defined 6 MHz television channel bandwidth using integrated band power marker methods employed in a spectrum analyzer.

The test suite of transmission parameters used for the undesired ATSC3 signals employed in all of these laboratory tests was created in a Rohde & Schwarz digital Vector Signal Generator using software developed by **Coherent**. While the transmission parameters of the ATSC DTV RF terrestrial signal (i.e., 8-VSB) are historically well defined and fixed, the primary transmission parameters of the newly-proposed ATSC3 signal are extremely flexible and selectable (i.e., up to 32k frequency subcarriers, either QPSK, 16-QAM, 64-QAM, 256-QAM data modulation per carrier, various guard intervals, number and location of subcarrier pilots, etc.). Prior to the start of laboratory testing, it was agreed that four sets of ATSC3 COFDM interference signal transmission parameters would be used to obtain a good cross-section of ATSC3 interference characteristics, especially when considering the effects of very high signal peaks (i.e., a large crest factor value). Four different ATSC3 interference signals were created that offered a diversity of transmission modulation types that represent the flexible ATSC3 standard. The goal was to provide diversity in the number of COFDM subcarriers and modulation types that could be included in a variety of future ATSC3 broadcast deployments that allow tradeoffs between robustness and data rate. It is noted that PAPR/CF-reduction algorithms were applied to all four ATSC3 interference source signals, just as they would be applied at the transmitter in broadcaster deployments and normal operation in order to improve transmitter performance and efficiency.

Therefore, the signal transmission parameters used during the field test are as follows:

ATSC1: A 6 MHz single-carrier 8-VSB signal with 8-level vestigial sideband modulation per the ATSC A/53 document, and compressed 1080i HD video.

ATSC3: A 6 MHz multiple-carrier COFDM signal with the following # of carriers and QAM modulation, all modulated with pseudo-random data. A complete set of ATSC3 transmission parameters are shown in **Table B-2**.

ATSC3-A: 32K FFT/ 64-QAM

ATSC3-B: 32K FFT/256-QAM

ATSC3-C: 16K FFT/256-QAM

ATSC3-D: 8K FFT/ 64-QAM

During this laboratory test, TOV threshold was determined using the following algorithm:

(1) Adjust the level of the interference or impairment (per the specific test procedure) in the prescribed signal level steps. For sensitivity, overload, added white noise, and co-channel interference tests, 0.1 dB attenuation steps were used for either the desired signal or the impairment/interference signal. For the remaining interference tests, 0.5 dB attenuation steps were used for the interference signal.

(2) Increase the level of impairment or interference until just *above* the occurrence of visible errors in the moving HD video test picture for a 20-second test interval.

(3) Verify acquisition capability by performing an up/down channel change at TOV at the last *error-free* condition before recording the undesired interference signal level that determines the D/U threshold value.

4.2. Specific Tests

The test plan called for general tests and interference tests. For all of these tests, the desired ATSC1 DTV signal was placed on CH 26 (545 MHz center frequency). The interference tests relate to the reception tolerance of a legacy ATSC1 receiver in the presence of large external undesired signals, such as other legacy ATSC1 DTV signals or newly-proposed ATSC3 DTV signals, especially if both legacy and new DTV signals share nearby spectrum following a spectrum repack scenario.

The laboratory test plan (total of 6 different groups of tests) is summarized in the detailed test matrix contained in **Table B-1** in **Appendix B**, and was confirmed by **Pearl** prior to the start of testing. As can be seen from the test matrix, this laboratory test consisted of **243** individual tests. For completeness, four different suites of modulation parameters were tested for the very flexible ATSC3 transmission system, as described in **Table B-2** in **Appendix B**.

The groups of laboratory tests are summarized below:

(1) Sensitivity: ATSC1
(2) Overload: ATSC1
(3) Added White Gaussian Noise (**AWGN**) Impairment Threshold: ATSC1
(4) Peak-to-Average Power Ratio (**PAPR**) and Crest Factor (**CF**): ATSC1, ATSC3
(5) Co-channel Interference: ATSC1-into-ATSC1, ATSC3-into-ATSC1
(6) First Adjacent Channel Interference: ATSC1-into-ATSC1, ATSC3-into-ATSC1

An important aspect of this laboratory test is that it did *not* attempt to precisely simulate actual commercial DTV high-power transmitter hardware (for either ATSC1 or ATSC3 signals) that may exhibit somewhat degraded in-band signal quality (e.g., due to sharply tuned emission mask nonlinear magnitude and/or phase distortion) or adjacent channel splatter characteristics (e.g., due to high-power amplifier nonlinearities). Rather, commercial-grade ATSC1 or high quality instrument-grade ATSC3 DTV sources were used to create “clean” desired and undesired test signals, and thus measure consumer DTV receiver performance under “ideal” conditions for comparison to the FCC planning factors, A/74 guidelines, and historical test data. Consequently, it is important to remember that the data presented here should be used to understand channel allocation issues *only* when appropriate consideration of the out-of-band spectral energy (i.e., first adjacent channel splatter) found in all high-power commercial transmission equipment has been made as well as appropriate consideration of the applicable Emission Mask performance.

4.2.1. Sensitivity

This test determines the sensitivity of a television receiver to an unimpaired desired ATSC1 DTV signal on CH 26, that is, the minimum unimpaired DTV signal level that will produce acceptable digital picture and sound under ideal conditions (i.e., without signal impairments or interference and with perfect RF impedance matching). The minimum signal level is determined by the tuner's internal white noise level (related to its noise figure NF by "kTB+NF", where NF is primarily determined by the first RF preamplifier), ATSC1 receiver white noise threshold, automatic gain control (AGC) range, and any undesired receiver-created electromagnetic interference (EMI) that is present at the tuner input. This test is a basic ATSC1 DTV receiver *reference* performance parameter that is part of the general test suite in order to characterize each consumer DTV receiver.

This minimum ATSC1 signal level value for TOV is theoretically around -84 dBm, assuming a 7 dB tuner noise figure per FCC planning factor, kTB tuner noise of -106.2 dBm/6 MHz (at room temperature), and 15 dB SNR at threshold. Since many of the interference tests in this project are performed with a "weak" desired signal (-68 dBm), the measured sensitivity threshold value should be much lower (16 dB or more) than this "weak" signal level, and therefore have minimal effect on the measured interference performance. Note that the 7 dB noise figure is only an assumption, and lower values are possible and often achievable in practice.

This general test is performed by decreasing the unimpaired desired ATSC1 signal on CH 26 from a matched impedance feed in 0.1 dB steps until TOV is achieved.

4.2.2. Overload

This test determines the overload capability of a receiver to an unimpaired desired ATSC1 DTV signal on CH 26, that is, the maximum unimpaired desired DTV signal that will produce an acceptable picture and sound under ideal conditions (i.e., without signal impairments or interference and with perfect RF impedance matching). The maximum signal level is determined by AGC range, tuner non-linearities (e.g., mixer, RF preamplifier, IF amplifier), and the ATSC1 receiver white noise threshold. This test is also a basic ATSC1 DTV receiver *reference* performance parameter that is part of the general test suite in order to characterize each consumer DTV receiver.

This maximum signal level value for TOV on current DTV receivers is often much greater than -8 dBm, the industry-recommended maximum signal level expected at a DTV tuner input under extreme conditions in the field. This laboratory test limited the maximum *desired* signal input to a receiver at the A/74 desired test signal guideline[15] of -5 dBm, which is higher than the A/74 guideline of -8 dBm for undesired test signals (largest field signal level expected by the industry to occur when preamplifiers are used[16]).

This general test is performed by increasing the unimpaired desired ATSC1 signal on CH 26 from a matched impedance feed in 0.1 dB steps until TOV is achieved (or -5 dBm is reached).

---

[15] *"ATSC Recommended Practice: Receiver Performance Guidelines"*, A/74:2010, Section 5.1 Sensitivity, Page 12, April 7, 2010.

[16] *"ATSC Recommended Practice: Receiver Performance Guidelines"*, A/74:2010, Section 5.2 Multi-Signal Overload (including Footnote 1), Page 12, April 7, 2010.

4.2.3. Added White Noise Threshold

This test determines the actual signal-to-noise ratio (SNR) at TOV for an unimpaired desired ATSC1 DTV signal when white Gaussian noise is added (i.e., random noise with a Gaussian amplitude probability distribution and a flat spectrum over the entire 6 MHz television RF channel). This test is another basic ATSC1 DTV receiver *reference* performance parameter that is part of the general test suite in order to characterize each consumer DTV receiver.

Since a moderate signal level (-53 dBm) is used for the desired signal, the tuner's internal white noise is insignificant compared to the externally-added white noise, and therefore is not a factor in the TOV measurement. Likewise, any receiver-created EMI that is present at the input as well as any AGC shortcomings also become insignificant. Therefore, this test allows a fairly true measurement of the ATSC transmission system SNR at TOV; this SNR is dependent on the 8-VSB modulation and forward error correction (Reed-Solomon and trellis-coded modulation) that are part of the A/53 DTV transmission standard, and part of all legacy ATSC1 DTV receiver implementation.

This SNR value at the white noise TOV is typically 15 dB ± 0.25 dB, and should be very consistent when carefully measured in a stable and calibrated laboratory setting. Measured values of this parameter are typically very repeatable in the laboratory, and are often a good indicator if something in the receiver is not operating quite right.

This general test is performed by adjusting the unimpaired desired ATSC1 signal on CH 26 from a matched impedance feed to a moderate desired ATSC1 signal level (-53 dBm) and then adding white noise in 0.1 dB increments until TOV is achieved.

4.2.4. Peak-to-Average Power Ratio (PAPR)

The PAPR test provides a complementary cumulative distribution function (CCDF) that describes the statistical occurrence of the modulated RF signal envelope of a bandlimited *noise-like* signal such as ATSC1 and ATSC3. The metrics of this statistical time measurement are various average powers (in 6 MHz) of the signal's modulated-RF envelope compared to the total average power (in 6 MHz) of the signal itself, and described in the form of a ratio. A value of PAPR at a given time percentage (e.g., 0.1%) means that the RF signal will spend this percentage of time at or above this RF signal level (referenced to the constant average power), and therefore is a direct reflection of its potential RF interference capability. The most common reference time percentage used to compare various signals is a 0.1% time value. This test is a basic DTV system parameter that is part of the general test suite in order to characterize the two different DTV system test signals (ATSC1 and ATSC3).

A similar signal measurement parameter that is related to PAPR is Crest Factor (CF). While PAPR provides a statistical analysis (CCDF) of the RF sinusoidal carrier envelope *power* compared (in dB) to the fixed average signal *power* reference, CF often uses a single measured carrier peak *voltage* value compared (in dB) to the fixed root-mean-square (rms) signal *voltage*.

This test provides a comparison between the two types of DTV signals. The typical CCDF value (at 0.1%%) for a noise-like ATSC1 8-VSB signal is ≈ 6.4 dB, which is about 2 dB less than what a white-Gaussian noise signal would produce. On the other hand, the noise-like ATSC3 COFDM signal has sharper equivalent transition roll-off regions (≈150 kHz) at each band edge than an ATSC1 8-VSB signal (≈300 kHz), and therefore has more "peaking" in its equivalent time-domain impulse response, which causes a higher PAPR and CF (typically 8.5 dB @ 0.1% and ≈11 dB, respectively, when no PAPR reduction techniques are applied). Therefore, this test provides some quantitative differences in the statistical RF envelope values for these two types of modulated data signals, and provides possible

causes for different RF interference characteristics. Since the ATSC3 transmission system is so flexible with its modulation parameters, measuring 4 different parameter combinations determines the possible effect that various transmission parameters have on the amount of signal peaking, and thus determines any potential effect on DTV interference. By utilizing four different combinations, a variety of deployment scenarios are evaluated. Additionally, PAPR/CF reduction is also applied to all four ATSC3 interference test signals for the interference laboratory testing.

This general test is performed by adjusting either the unimpaired ATSC1 or ATSC3 signal on CH 26 from a matched impedance feed to a moderate ATSC1 or ATSC3 signal level (-53 dBm), and then applying the signal to an appropriate test instrument that performs the PAPR CCDF measurement.

4.2.5. Co-Channel Interference (ATSC1-into-ATSC1, ATSC3-into-ATSC1)

This general test determines the amount of undesired ATSC1 or ATSC3 signal interference that can exist at an ATSC1 legacy receiver input when a single undesired interferer signal is on the same channel as the desired ATSC1 signal. This co-channel test is considered a basic consumer DTV receiver *interference* performance test, and provides insight into any difference in interference performance between the two different types of DTV signals which might affect FCC planning factors (i.e., interference ratios) and DTV service areas.

Since ATSC1 and ATSC3 signals are both noise-like with a flat spectrum across most of the channel (≈5.4 MHz for ATSC1 and ≈5.7 MHz for ATSC3), they share many characteristics with white Gaussian noise. Therefore, the expected co-channel D/U interference ratio at TOV for ATSC1-into-ATSC1 and ATSC3-into-ATSC1 should be similar, that is, generally near the same 15 dB SNR value as for white noise, just as recommended by the ATSC[17], although a 0.5 dB margin was added by the ATSC to the original value. A similar value is described in the FCC planning factors[18]. One benefit of this test is the determination of any differences in interference thresholds between lower-valued PAPR/CF ATSC1 interferers and higher-valued PAPR/CF ATSC3 interferers with PAPR reduction.

However, it has been observed that sometimes a slightly better (i.e., lower) D/U ratio is achieved (e.g., 14.8 dB) when ATSC1 is the interferer. This is explained by the fact that the ATSC1 signal (i.e., with 8-VSB modulation) is only noise-*like* and therefore not absolutely identical to noise. The ATSC1 DTV signal has a peak-to-average ratio (PAPR) that is about 2.5 dB less than white noise (at the 99.9% statistical level). On the other hand, the ATSC3 DTV signal (i.e., with COFDM modulation) is essentially identical to noise with its very sharp spectral transition regions, and has a PAPR about the same as white noise. Therefore, the ATSC3 PAPR (with no PAPR reduction) is about 2.5 dB greater (at the 99.9% statistical level) than an ATSC1 signal. Consequently, the interference D/U ratio when ATSC3 is the interferer may be closer to the white noise SNR value at threshold (i.e., larger D/U value at TOV), and suggests another reason, beyond transmitter efficiency and performance to apply PAPR/CF reduction to ATSC3 signals in order to minimize any additional interference. Therefore, one benefit of this test is the determination of any differences in interference thresholds between lower-valued PAPR ATSC1 interferers and higher-valued PAPR ATSC3 interferers (both 6 MHz signals). Since co-channel interference thresholds are at least 15 dB below the desired signal level, no circuit non-linearities are involved, but rather just linear impairment interference.

---

[17] ATSC A/74:2010, "ATSC Recommended Practice: Receiver Performance Guidelines", Section 5.4.1, Table 5.1, Page 14, April 2010.

[18] OET Bulletin #69, "Longley-Rice Methodology for Evaluating TV Coverage and Interference", Section III: Part2, Table 5A, Page8, Feb 6, 2004.

Additionally, the difference between the two signal bandwidths (i.e., 5.4 MHz for ATSC1 versus 5.7 MHz for ATSC3) may also cause a slight difference in the two interference D/U ratios at TOV. Therefore, the interference threshold D/U values for ATSC1 and the ATSC3 co-channel interferer would be expected to be *essentially* the same value as the 15-dB white noise threshold value.

This interference test is performed by adjusting the unimpaired desired signal on CH 26 from a matched impedance feed to a moderate desired ATSC1 signal level (-53 dBm) and then increasing the undesired ATSC1 or ATSC3 co-channel interference signal level in 0.1 dB steps until TOV is achieved.

4.2.6. Adjacent Channel Interference (ATSC1-into-ATSC1, ATSC3-into-ATSC1)

This general test determines the amount of a undesired ATSC1 or ATSC3 signal interference that can exist at an ATSC1 legacy receiver input when a single undesired interferer signal is on a ***first*** upper or lower adjacent channel to the desired ATSC1 signal. This first adjacent channel test is considered a basic DTV receiver *interference* performance test, and provides insight into any difference in interference performance between the two different types of DTV signals which might affect FCC planning factors (i.e., interference ratios) and DTV service areas.

For determining acceptable threshold values for first adjacent channel interference performance, the ATSC-recommended D/U ratio is -33 dB[19] (a minus value for D/U means that the undesired interferer signal is larger than the desired signal). This D/U value was originally selected by ATSC to provide 6 dB of margin beyond the -27 dB *average* value of the two FCC planning factors[20] (-28 dB for lower adjacent channel and -26 dB for upper adjacent channel). While a 6 dB margin is conservative, a more comfortable margin of 10 dB would be even better for this special type of test with no adjacent channel transmission splatter, i.e., a D/U ratio of -37 dB.

One benefit of this test is the determination of any differences in interference thresholds between lower-valued PAPR ATSC1 interferers and higher-valued PAPR ATSC3 interferers (both 6 MHz signals). These interference test channels represent possible interfering signals that can stress the nonlinearities of the legacy ATSC1 consumer tuner input (RF preamplifier, mixer, and IF amplifier). The expected type of interference in the ATSC1 tuner is cross-modulation and inter-modulation as well as large signal de-sensitization. Any tracking band pass filter present at the tuner input, which is needed to reduce N+14 and N+15 image frequencies for single-conversion tuners, helps to reduce interfering signals that are distant in frequency from the desired channel, but have little effect on nearby first adjacent interference signals. The presence of broadband AGC, a method which uses whatever interference signal energy that passes through a tracking filter and the mixer to reduce the gain of the front end amplifier, may reduce interference effects and allow better performance.

This interference test is performed by adjusting the unimpaired desired ATSC1 signal level on CH 26 from a matched impedance feed to either a weak signal level (-68 dBm), a moderate signal level (-53 dBm), or a strong signal level (-28 dBm), and then increasing the undesired ATSC1 or ATSC3 adjacent channel interference signal level in 0.5 dB steps until TOV is achieved.

---

[19] ATSC A/74:2010, "ATSC Recommended Practice: Receiver Performance Guidelines", Section 5.4.2, Table 5.2 (including Note A below table), Page 15, April 2010.

[20] OET Bulletin #69, "Longley-Rice Methodology for Evaluating TV Coverage and Interference", Section III: Part2, Table 5A, Page 8, Feb 6, 2004.

5. TEST BED

MSW provided the required laboratory test equipment (signal sources and measurement) for performing the desired RF interference tests. , **MSW** also purchased the five legacy ATSC1 consumer digital television sets and provided one already-purchased CECB unit.

The RF test equipment used for the **Pearl** laboratory test included two frequency-agile ATSC1 DTV sources (one desired and one undesired interferers), one frequency-agile ATSC3 DTV source (undesired interferer with selectable modulation parameters per software file loading), one broadband white Gaussian noise impairment source, a narrowband band-stop filter, a spectrum analyzer, a COFDM analyzer, a signal combiner, a 0.1 dB step attenuator, 50Ω double-shielded coaxial cables of required length with connectors of appropriate type and gender, and 50Ω-to-75Ω impedance matching pads. Therefore, the RF test bed was a 50-Ohm system design that utilized 50-to-75-Ohm impedance converters mounted on the DTV receivers at the final feed point.

Moderately large signals were delivered to the end of the well-shielded coaxial cables feeding the DTV receivers before being reduced (and impedance matched) by fixed attenuation pads (i.e., ≈6 dB minimum loss pads) in order to minimize any leakage into the cables, and thus provide good measurement accuracy.

Various testing configurations were employed for desired signal sensitivity, overload, added white noise threshold tests, and the co-channel and first adjacent channel interference tests. The test block diagrams of the different configurations are illustrated in **Appendix C**. These different configurations were necessary for the various types of tests (differentiating signal characteristic and impairment scenarios as well as the various interference scenarios).

The block diagram in **Figure C-1** describes the test setup for the desired channel ***Sensitivity*** and ***Overload*** threshold measurement tests.

The block diagram in **Figure C-2** describes the test setup for the test signal ***PAPR*** measurement tests.

The block diagram in **Figure C-3** describes the test setup for the ***Additive White Gaussian Noise*** (AWGN) threshold and the ***Co-channel*** interference threshold measurement tests.

The block diagram in **Figure C-4** describes the test setup for the ***Adjacent Channel*** threshold measurement tests.

Figure A-1 in **Appendix A** shows a picture of the test equipment, and **Table 2** below lists the details of the test bed equipment utilized in this conducted laboratory RF performance test.

Table 2 Test-bed equipment summary.

Manufacturer	Model #	Description
DVEO	ASI Source	*Desired* ATSC1 Video Source; ASI loop with stored 1080i compressed video file
Comark	Adapt IV	*Desired* ATSC1 8-VSB RF Source
Comark	Adapt IV	*Undesired* ATSC1 8-VSB RF Source
Rohde & Schwarz	SMU200A	*Undesired* ATSC3 COFDM RF Source; programmable Vector Signal Generator
NoiseCom	NC6109	Broadband White Gaussian Noise Generator (added white noise)
MFC	MFC 19311	Narrowband Band-Stop Filter (CH 26)
JFW	50DR-001	Manual rotary attenuator, 0 – 110 dB; 1-dB-step attenuation
Pasternack	PE7034-1	Manual rotary attenuator, 0 – 1 dB; 0.1 dB steps
Mini-Circuits	ZFSC-2-4	RF Signal Combiner (splitter used "backwards")
Mini-Circuits	BMP-5075	Lab-grade 50Ω–to-75Ω minimum loss pads (impedance converter for DTV RXs)
Belden	RG-223	50-Ohm, high-quality double-shielded foil & braid coaxial cable
Rohde & Schwarz	FSH-3	RF Spectrum Analyzer (recently *calibrated* in R&S laboratories)
Rohde & Schwarz	FSQ	COFDM Signal Analyzer (ATSC3 CCDF plot & spectrum plots)

5.1. Test Bed Components

Generally, the RF test bed was carefully calibrated at each expected desired and undesired (interference) test frequency at least once every test day and before the start of each major test. This RF calibration covered all the system components such as test signal sources, coaxial cables, attenuators, loss pads, impedance converter pads, etc.

All absolute signal levels (ATSC1 and ATSC3) were measured by a spectrum analyzer with band-power makers that averaged the integrated signal power over the entire 6 MHz RF television channel. Likewise, desired-to-undesired (D/U) ratios were determined by direct average power measurements of desired and undesired RF signals at impairment and interference thresholds.

5.1.1. ATSC1 DTV Sources

Two ATSC1 DTV sources were employed in this laboratory test. One source provided the desired CH 26 ATSC1 DTV signal and one provided the undesired ATSC1 DTV interference signal. Both of the ATSC1 sources were Comark Adapt IV exciters with frequency-agile upconverters that provided ATSC1 RF signals on any selected 6 MHz U.S. television channel. The test video source was a DVEO ASI Server that provided an ASI MPEG-2 transport stream output containing a pre-recorded 2 minute video loop employed for TOV determination. The 1920 x 1080i high-definition video (with motion), captured off the air, was named "Eggplant Parmesan" from a local cooking show. No video signal was used for the undesired ATSC1 interference signal, but rather a pseudo-random data signal was employed.

The ATSC1 desired RF signal spectrum was measured and recorded (**Figure D-1a**). The in-band signal spectrum was extremely flat (< 0.25 dB ripple), with the traditional root-raised-cosine transition regions (620 kHz) at each band edge and the relatively small in-phase pilot carrier at 310 kHz above the lower band edge. The in-band desired signal quality SNR value was in excess of 40 dB, far better than what was needed for this laboratory test. The ATSC1 interference source had 6 MHz adjacent channel average splatter power that was observed to be about 50 dB below the main signal level. However, this measured value may have been partially masked by the spectrum analyzer's own measurement noise floor, and was subsequently found to be 59 dB when accurately measured with a band-stop filter for

better precision. Its broadband noise has an effect on the test bed dynamic range. More details can be found in the section titled "Test Bed Dynamic Range".

Additionally, the RF envelope complementary cumulative distribution function (CCDF) of the ATSC1 source signal was measured and plotted (**Figure D-1b**), illustrating the well-known typical 6.4 dB peak-to-average power ratio at the 99.9% statistical level.

It should be noted that the ATSC1 interference signal was created with a high-quality, low-power commercial-grade transmission equipment, and did not include any high power amplifiers with their inherent nonlinearities as typically found at broadcast transmitter sites. Therefore, much better out-of-band energy performance is achieved than what typically exists in the field. Just as discussed in the A/74 document[21], laboratory test signals with minimal out-of-band splatter provide good and repeatable benchmark test results in the laboratory for comparative DTV receiver performance evaluation.

However, it must be recognized that these laboratory interference test results, while repeatable in the laboratory, do *not* accurately reflect field interference results when actual commercial high-power hardware is used with imperfect out-of-band characteristics. Actual field results, in the presence of interference signals with adjacent channel splatter that acts as co-channel interference, will degrade the laboratory-measured interference D/U ratios obtained in the absence of splatter. Consequently, the interference data presented here would need to be adjusted to account for high-power transmitter spectral mask compliance in order to be used in allocation planning.

5.1.2. ATSC3 DTV Source

One ATSC3 source was employed in this laboratory test for use as an interference source. The source was comprised of a Rohde & Schwarz SMU200A Vector Signal Generator (VSG) and loaded with 4 individual computer files containing PRS data. This data was modulated with different suites of transmission parameters according to the proposed ATSC3 system standard, with each RF data stream having PAPR reduction applied to it. This data processing had been mathematically simulated in computer software, and then loaded as files in the VSG. Once running, this unit would loop through the data samples of a selected file to produce a repeating COFDM modulation signal. The basic description of the four sets of selected transmission parameters are:

32k FFT, 64-QAM
32k FFT, 256-QAM
16k FFT, 256-QAM
8k FFT, 64-QAM

A detailed description of the various ATSC3 interference test signal transmission parameters that were selected and used in this laboratory test is contained in **Table B-2**.

The instrument-grade ATSC3 test signal source has a very good dynamic range, and therefore it created a high-level "clean" and accurate DTV signal with moderately low broadband noise levels and very little IM3 products (i.e., minimal adjacent channel splatter). The frequency-agile source can create 6 MHz bandwidth signals on any RF television channel that was required (e.g., interfering signal on CH 25, CH 26, and CH 27).

[21] ATSC A/74:2010, "ATSC Recommended Practice: Receiver Performance Guidelines", Section 5.4.2, Table 5.2 (including Note A below table), Page 15, April 2010.

The signal spectrum of the ATSC3 test signal was measured and recorded. The spectrum of the ATSC signal is shown in **Figure D-2a**. Note the extremely sharp transition regions of the ATSC3 signal at each end of the 6 MHz channel, which are much sharper than the ATSC1 signal. Also note the relatively small adjacent channel noise that is at least 63 dB below the flat-top portion of the spectrum. However, this measured value may have been partially masked by the spectrum analyzer's own measurement noise floor, and was subsequently found to be 69 dB when accurately measured with a band-stop filter for better precision. The broadband noise has an effect on the test bed dynamic range. More details can be found in the section titled "Test Bed Dynamic Range".

Additionally, the RF envelope CCDF of each ATSC3 source signal was measured and recorded. A CCDF plot of one of the ATSC3 signals is shown in **Figure D-2b**. The ATSC3 signal plot illustrates the typical peak-to-average power ratio of 8.5 dB at the 99.9% time statistic (with no PAPR reduction), which is essentially equal to that of a white noise signal and is noticeably higher than an ATSC1 signal. The PAPR/CF value was reduced by applying a PAPR/CF-reduction technique on all 4 ATSC3 interference test signals.

It should be noted that the ATSC3 interference signals was created with a high-quality, instrument-grade piece of test equipment, and not by commercial-grade hardware that is found in transmitter sites. This means that the "cleaner" interference signal may potentially provide much better out-of-band energy performance than what might be found in the field. Just as discussed in the A/74 document[22], laboratory test signals with minimal out-of-band splatter provide good and repeatable benchmark test results for comparative DTV receiver performance evaluation.

However, it must be recognized that these laboratory interference test results, while repeatable in the laboratory, do *not* accurately reflect field interference results when actual high-power commercial hardware is used with imperfect out-of-band characteristics. Actual field results, in the presence of interference signals with adjacent channel splatter that acts as co-channel interference, will degrade the laboratory-measured interference D/U ratios obtained in the absence of splatter. Consequently, the interference data presented here would need to be adjusted to account for high-power transmitter spectral mask compliance in order to be used in allocation planning.

5.2. Test Bed Dynamic Range

The dynamic range of the test bed, which determines the ability to handle significant differences in signal levels between desired and undesired signals, is an important factor in evaluating receiver interference performance, and is limited by a number of possible noise signals in the test bed. This importance is due to the effect that large D/U threshold values (e.g., -37 dB or better) are expected to be measured in first *adjacent channel* interference tests rather than small D/U threshold values (e.g., +15 dB) that are expected to be measured in *co-channel* interference tests. This presents challenges given real-world parameter limitations on test sources, RF amplifiers, and spectrum analyzers.

Therefore it is vital that the test bed has enough dynamic range in order to accurately determine the receiver interference rejection capabilities. In other words, the range of error-free receiver operation should *not* be limited by the intermodulation or broadband noise in the test bed from amplifiers internal or external to an interference source, but rather by the device under test (i.e., intermodulation noise created in the receiver's tuner).

[22] ATSC A/74:2010, "ATSC Recommended Practice: Receiver Performance Guidelines", Section 5.4.2, Table 5.2 (including Note A below table), Page 15, April 2010.

However, any real-world frequency-agile laboratory interference test source will have some sideband energy splatter (e.g., intermodulation or broadband noise) above and below its output signal frequency that will fall into the desired DTV test channel (i.e., CH 26 in this test). In actual field applications, high-power DTV transmitters operate on a fixed, pre-determined frequency, with each transmitter employing a large power-handling one-channel-wide band-pass filter (often referred to as a "mask filter") that essentially eliminates both broadband noise and intermodulation energy from being transmitted in adjacent channels (or at harmonics of the transmitter's RF channel). It should be noted that in this laboratory test, where relatively low power is generated for receiver testing, the main component of sideband energy from the interference source is broadband noise.

It is not feasible, however, to provide many different fixed-frequency narrow *band-pass* filters in these broadband, frequency-agile laboratory sources, one for each interference channel to be laboratory tested. Variable band-pass filters are not acceptable due to a lack of sharp attenuation frequency transitions. A better solution to this problem is to insert a single narrow *band-stop* filter in the interference signal path in order to remove the interference source's sideband splatter from falling within the desired test channel's spectrum (i.e., CH 26) before addition of the undesired interference signal to the desired DTV signal, thus extending the measurement range of the test bed.

For *first* adjacent channel interference, it should be noted that FCC service area planning factors[23] account for allowable upper and lower transmitter sideband splatter that is just equal to the FCC's rigid emission mask[24] [25]. These D/U limits (for TOV) are -28 dB (lower first adjacent) and -26 dB (upper first adjacent), or the single average value of -27 dB can be conveniently used for both adjacent channel limits. Therefore, first adjacent channel interference testing in the laboratory theoretically should be such to verify legacy ATSC1 DTV receivers can operate under these minimal interference conditions, particularly with adjacent channel ATSC3 signals.

However, testing using an ATSC1 or ATSC3 RF interference source with adjacent channel splatter precisely equal to the emission mask is extremely difficult and often impractical. Therefore, another option is often employed, and that is to test with a "clean" interference signal that has very little adjacent channel splatter (intermodulation or broadband noise). This produces the expectation that much better interference D/U ratios at TOV should be possible in the laboratory than in the field since the DTV receiver is not limited by the "co-channel" noise caused by a high-power transmitter's adjacent channel splatter. Rather, interference performance in the laboratory is essentially limited only by internally-generated IM3 products in its receiver's tuner. As described in a previous section, the goal to test ATSC1 legacy DTV receivers with these relatively "clean" interfering signals is to see if D/U interference levels can at least reach -33 dB (6 dB beyond the average FCC limit of 27 dB, per ATSC recommendation), or preferably -37 dB (i.e., a "safer" 10 dB beyond the FCC limit) in order to provide more performance evaluation margin.

5.2.1. Device Sideband Noise

The test bed limit must first be quantified for *each* interference test channel and each interference test source by determining the amount of integrated noise-like power that falls within the desired DTV test channel. The first step is accomplished by determining the amount of broadband noise falling within the

[23] OET Bulletin #69, "Longley-Rice Methodology for Evaluating TV Coverage and Interference", Section III: Part2, Table 5A, Page 8, Feb 6, 2004.
[24] FCC 47CFR 73.622(h).
[25] "IEEE Recommended Practice for Measurement of 8-VSB Digital Television Transmission Mask Compliance for the USA", RF Standards Committee G-2.2, Page 8-9, IEEE, August 9, 2006.

desired signal channel from the interference source when it is tuned to the various interference test channels. That is, the amount of sideband (broadband) noise that falls within the desired 6 MHz DTV channel (CH 26) from each interference source (i.e., the ATSC1 and ATSC3 sources) must be known when the interfering source is tuned to a given interference test channel (i.e., CH 25 and CH 27).

A simple way to estimate this is to evaluate the spectrum of the ATSC1 and ATSC3 interference sources when these devices are outputting the maximum test signal level of -8 dBm at the receiver's input since that is likely to produce the maximum energy splatter. The broadband noise values of two sources can be noticeably different for different types of units (e.g., commercial-grade exciters versus instrument-grade test generators). A quick measure of the integrated 6 MHz sideband energy was easily obtained by viewing the interference source's output signal on a spectrum analyzer. However, it is possible that this measured value may have been partially masked by the spectrum analyzer's own noise floor and mixer intermodulation limit. In order to extend the dynamic range of the spectrum analyzer in order to make a more accurate broadband noise measurement, a band-stop filter was temporarily used to remove the interference source's main output signal and leave just the sideband energy available for more sensitive spectrum analyzer measurement. This should have been performed for each interference test channel (CH 25 and CH 27), but that would have required two additional band-stop filters. Since this laboratory interference test called for a CH 26 band-stop filter to be employed in order to extend the dynamic range of the test bed, and was therefore readily available, this same filter was also temporarily used to more accurately measure and document the broadband noise coming from each of the two test bed interference sources. Of course, this allowed interference source testing at only one channel (CH 26). However, the measured broadband noise values centered around CH 26 is essentially the same as which exists when the interference sources are tuned to nearby CH 25 or CH 27.

After tuning each interference source to CH 26 and then accurately setting each output level to -8 dBm on CH 26, the band-stop filter was inserted into the path between the source and the spectrum analyzer. After accounting for the band-stop filter's pass-band attenuation (≈ **1.5 dB**) for CH 25 and CH 27, the noise energy attenuation value $\mathbf{A_S}$ (in 6 MHz) in *both* the lower and upper adjacent channel spectrums of the commercial-grade ATSC1 and instrument-grade ATSC3 sources was determined to be **59 dB** and **69 dB**, respectively, below the -8 dBm interference signals. The assumption was then made that the same upper and lower adjacent channel broadband noise attenuation measurement values for the same unit are identical whether the source signals are on CH 25, CH 26, or CH 27. These source attenuation values $\mathbf{A_S}$ are part of the dynamic range calculation described later.

5.2.2. Narrowband Band-Stop Filter

For first adjacent channel interference tests, the significant challenge is to provide acceptable stop band attenuation of unwanted interference source noise that falls into the desired channel (e.g., CH 26) without significantly attenuating the nearby interference signal itself that occupies an adjacent channel (e.g., CH 25 or CH 27). This first adjacent channel test requirement creates a challenge for a band-stop filter, sharply limiting the amount of stop-band attenuation in a narrow frequency range (i.e., a single 6 MHz television channel).

The filter is a narrowband CH 26 band-stop filter (with multiple narrow-band resonant cavities) typically used for laboratory first adjacent channel testing. A picture of the unit can be found in **Figure D-3a** while a plot of its magnitude transfer function is shown in **Figure D-3b**. The filter is a 50-Ohm design, housed in a 2-RU metal rack-mounted chassis, with 8 cavities properly tuned to remove a significant amount of the interference source's noise-like signal energy within CH 26 (i.e., 542 – 548 MHz).

The integrated band-stop filter attenuation across 6 MHz, along with an ATSC1 DTV receiver's internal root-raised cosine (RRC) filtering that reduces any energy at each band edge, decreases any broadband noise in the *interference* path (prior to addition to the desired signal) that occupies the desired test channel (CH 26). This cascaded filtering effect was equivalently measured by inserting into the band-stop filter a 6 MHz DTV signal (8-VSB), which is a flat-spectrum signal that is already shaped with RRC transition regions in the modulator that correspond to the "matched filter" residing in every ATSC1-compatible receiver. This measurement determined the total equivalent filter attenuation for the desired DTV channel. After accounting for the band-stop filter's CH 25 and CH 27 pass-band insertion loss (≈ **1.5 dB**), the net result of these two filtering processes is an integrated-filter attenuation ($\mathbf{A_F}$) in CH 26 of about **34 dB**. This filter attenuation value is part of the dynamic range calculation described in the next section.

5.2.3. Dynamic Range Calculation

Some basic concepts and assumptions are employed in the overall dynamic range methodology:

(1) The amount of interference source average broadband noise power (in 6 MHz) in the first adjacent channel (i.e., N±1) compared to the interferer's in-band average signal power (in 6 MHz) is the sideband attenuation value $\mathbf{A_S}$, and was found to be ≈ **59 dB** for the commercial-grade ATSC1 interference source and ≈ **69 dB** for the instrument-grade ATSC3 interference source. A single value for each of these source broadband noise attenuation values was selected that accurately represents the noise levels for both upper and lower adjacent channels. This determines how much test bed noise each interference source contributes to the desired CH 26 noise floor (without a band-stop filter present).

(2) The band-stop filter attenuates any interference source broadband noise that falls into the desired CH 26. This filter's integrated 6 MHz attenuation value $\mathbf{A_F}$ was found to be ≈ **34 dB**, and therefore significantly increases the test bed dynamic range.

(3) At the interference error threshold of a legacy ATSC1 receiver, the total integrated white Gaussian noise level or noise-like interference level present in the desired test channel (i.e., CH 26) must be ≈15 dB below the desired signal level (i.e., TOV occurs at an SNR_{THR} ≈ 15 dB). This is true regardless of whether the "noise" is due to the white Gaussian noise in the DTV tuner, intermodulation "noise" caused by non-linearities in the DTV's tuner, the test bed's interference source's adjacent channel sideband "noise", or some combination of all of them.

(4) The amount of test bed noise (i.e., interference source's sideband noise) should be low enough to allow the DTV receiver's true interference limit to be reached or (as is the case in this test) to at least verify that the receiver's D/U interference threshold is beyond an acceptable value (e.g., better than -37 dB). For a desired first adjacent channel D/U test bed measurement range of -37 dB, the sum of the interference source sideband attenuation $\mathbf{A_S}$ plus the band-stop filter attenuation $\mathbf{A_F}$ must be at least 52 dB (i.e., 37 + 15). It should be noted that these best-case D/U interference limits just described are defined as the case where a "perfect" DTV receiver would reach TOV due to the *test bed* noise limit, without any contribution from intermodulation of the DTV receiver. Therefore, the actual test bed limits should be at least 10 dB beyond (i.e., better) than these calculated values (e.g., $\mathbf{A_S}$ plus $\mathbf{A_F}$ ≥ 62 dB) in order to accurately measure the ATSC1 receiver's interference limit with minimal effect from the test bed noise.

To calculate the dynamic range (DR) of the test bed at each interference channel, using the above assumptions and approximations, the following formula can be used, as illustrated in **Figure E-1**:

$$\mathbf{DR\ (in\ dB)} \equiv \mathbf{A_S} + \mathbf{A_F} - \mathbf{SNR_{THR}} = \mathbf{A_S} + \mathbf{A_F} - \mathbf{15} = -\ \mathbf{D/U}$$

The dynamic range of the test bed indicates how much larger an interfering signal can be *above* a desired ATSC1 signal before TOV is reached, which is described by a negative D/U value.

The dynamic range of testing for first adjacent channel interference (N±1) with a band-stop filter was found to be at least **68 dB** (including a 10 dB margin), which represents a test bed threshold D/U limit of **-68 dB** that is well beyond the desired D/U value of **-37 dB**. This dynamic range is sufficient to provide useful and significant interference results, particularly since the FCC planning factor of -26 dB (upper adjacent channel) and -28 dB (lower adjacent channel) is based on a limitation that is primarily due to DTV transmitter splatter that is just equal to the FCC rigid emission mask. It also provides the opportunity to compare ATSC1-into-ATSC1 interference using a commercial-grade exciter with ATSC3-into-ATSC1 interference using an instrument-grade generator without test bed noise masking the results.

The maximum measurement dynamic range for each relative undesired test channel utilized in the test bed is recorded in **Table 3** below, verifying that more than enough test bed dynamic range was available for these first adjacent channel interference tests.

Table 3 Test bed dynamic range for ATSC1 and ATSC3 interference sources.

Interference Source	A_S	A_F	SNR_{THR}	D/U Dynamic Range [1]	Additional Margin	D/U Dynamic Range [2]
ATSC1	59	34	15	**78 dB**	10	**68 dB**
ATSC3	69	34	15	**88 dB**	10	**78 dB**

Note 1: Dynamic range denotes maximum measurable D/U value (in dB) possible using this test bed with a desired CH 26 signal and either undesired ATSC1 or ATSC3 RF test signal sources. The values here do **not** *include* a 10 dB margin for the test bed noise floor, and therefore these numbers reflect that the dynamic range D/U is limited to these values by the test bed noise floor.

Note 2: Dynamic range denotes maximum measurable D/U value (in dB) possible using this test bed with a desired CH 26 signal and either undesired ATSC1 or ATSC3 RF test signal sources. The values here do *include* a 10 dB margin for the test bed noise floor, and reflect D/U values that can be measured with minimal effect from the test bed noise floor.

6. TEST RESULTS

The general tests (sensitivity, overload, AWGN threshold, co-channel interference, PAPR) and the interference tests (co-channel, first upper and lower adjacent channel) were performed on all 5 ATSC1 DTV sets (**2012 – 2015**) as well as on a CECB set-top unit (**2008**).

Appendix F contains tables of the detailed individual laboratory test results. **Table F-1** contains a tabulated summary of the general test results for the 6 DTV receivers while **Table F-2** through **Table F-4** contain a tabulated summary of the interference test results.

6.1. General Tests

6.1.1. Sensitivity Threshold

The results of the sensitivity threshold test for the 6 legacy ATSC1 test receivers were very favorable. A summary of the receiver sensitivity results for all 6 receivers can be found in **Table F-1a**.

All 6 of these consumer test receivers exceeded the recommended A/74 guideline of -83 dBm. The average signal sensitivity threshold for these 6 DTV receivers was **-85.9 dBm**. The worst case sensitivity threshold was **-84.6 dBm**, which still exceeded the A/74 recommended value.

6.1.2. Overload Threshold

The results of the overload threshold test for the 6 legacy ATSC1 test receivers were also very favorable. A summary of the overload results for all 6 receivers can be found in **Table F-1a**.

All 6 of these receivers sustained maximum test power (-5 dBm) without reaching the threshold of errors (i.e., DTV sets always produced picture and sound), and therefore have the ability to handle very large desired ATSC1 DTV signals on CH 26. Therefore, this test value met the -5 dBm A/74 guideline, indicating the ability of these receivers to meet the largest signal level expected by the industry to occur in the field (i.e., -8 dBm per ATSC A/74 "Multi-Signal Overload").

This test is the only time in the laboratory test plan where this large signal value (-5 dBm) was used. Together with the sensitivity results, all 6 legacy DTV receivers were observed to have better than **79 dB** dynamic range capability for a single unimpaired desired DTV signal. While signals larger than this value are not expected in the field, this special test shows that the dynamic range of each consumer test receiver (particularly AGC range) is such that its on-channel overload capability can handle the maximum expected signal level in the field.

6.1.3. AWGN Threshold

The AWGN threshold test, performed at a moderate desired signal level (-53 dBm) for all 6 legacy ATSC1 test receivers, indicated very good and very consistent white noise threshold values below the expected 15 dB value assumed by industry practice for ATSC (8-VSB) receivers (and measured at the Advanced Television Test Center on the Grand Alliance reference receiver). A summary of the AWGN threshold results for all 6 receivers can be found in **Table F-1a**.

The average value of **14.7 dB** for all 6 receivers was observed in this measurement, with only a **0.3 dB** peak-to-peak variation of threshold values. Even the worst case value of **14.8 dB** was still below the expected 15 dB value. While performance in the field can be noticeably different from this ideal laboratory test condition (e.g., mismatched complex impedance between antennas coupled via long cables to tuners, presence of propagation multipath, lack of presence of noise or interference, etc.), these 6 receivers from a variety of manufacturers showed extreme consistency under well-controlled laboratory conditions.

AWGN threshold and receiver noise figure each affect the ultimate signal sensitivity threshold under these ideal receiver input impedance matching conditions (e.g., impedance mismatch loss in "real-world" applications adds to noise figure, which in turn affects sensitivity). The equivalent *ideal* receiver noise figure (NF) can be calculated from the sensitivity (S_{MIN}) and AWGN threshold (SNR_{THR}) measurements, as well as the theoretical amount of white Gaussian noise in a matched impedance scenario (kTB where B = 6 MHz). The following equations describe the method:

$$S_{MIN} = kTB + NF + (SNR_{THR})$$

$$NF = S_{MIN} – kTB - (SNR_{THR})$$

where kTB is -106.2 dBm/6 MHz at "room" temperature (i.e., 25 degrees Celsius).

For the 6 DTV receivers, the average receiver noise figure was **5.7 dB**, below the 7 dB value assumed by the FCC in their service area planning factors. The entire range of calculated noise figures was **4.8 dB** to **7.0 dB**.

6.1.4. Peak-to-Average Power Ratio (PAPR)

The PAPR test sought to characterize the differences in the PAPR (and CF) values not only between ATSC1 (8-VSB) and ATSC3 (COFDM), but also the differences among the four selected ATSC3 interference test signals that employed different transmission parameters (i.e., # of carriers and QAM modulation). A summary of the various PAPR and CF values of the test signals can be found in **Table F-1b**.

The PAPR test verified the expected values of **6.4 dB** for ATSC1 (8-VSB) and **8.4 dB** (mean value of 4 different test signals) for ATSC3 (COFDM) when no PAPR reduction was employed, with only slight differences in PAPR among the 4 sets of modulation parameter. The application of a PAPR/CF-reduction technique to the four different ATSC3 signals provided little change to the PAPR value at the traditional 0.1% time statistic value, but rather it reduced the mean crest factor of the four signals by about **1.2 dB**.

6.2. Interference

6.2.1. ATSC1-into-ATSC1 Co-Channel Interference

The ATSC1-into-ATSC1 co-channel interference test performed for all 6 legacy DTV test receivers at a moderate desired level (-53 dBm) showed that the co-channel D/U threshold ratio was essentially the same as the AWGN threshold. A summary of the results can be found in **Table F-2**.

The average value of this co-channel D/U ratio was **14.7 dB**, essentially the same value as the white noise threshold. It's possible to have a slightly better value than white noise since the ATSC (8-VSB) DTV signal has a 2-dB lower peak-to-average power ratio than additive white Gaussian noise at the 99.9% statistical point. The entire ATSC1 interference threshold deviation for the 6 receivers was very consistent, with only a **0.4 dB** spread from maximum to minimum values. As expected, this falls into line with the current FCC planning factors for spectrum allocation.

6.2.2. ATSC3-into-ATSC1 Co-Channel Interference

The ATSC3-into-ATSC1 co-channel interference test performed for all 6 legacy DTV test receivers at a moderate desired level (-53 dBm) showed only a slightly higher (i.e., worse) D/U threshold ratio than for ATSC1-into-ATSC1 co-channel interference. A summary of the results can be found in **Table F-2**.

ATSC3-into-ATSC1 co-channel interference threshold (average D/U value of **15.2 dB** for all 4 versions of ATSC3 test signals over all 6 receivers) was only slightly worse (**0.5 dB**) than ATSC1-into-ATSC1 threshold. The entire ATSC3 interference threshold deviation for all 6 six receivers and all 4 types of ATSC3 was only a **0.4 dB**, spread from maximum to minimum values, again showing considerable consistency. The worst result for ATSC3 interference was only **15.2 dB**, thereby allowing the ATSC3 signal to use the same FCC planning factor for spectrum allocation as there is no significant difference in performance between the two signals.

6.2.3. ATSC1-into-ATSC1 First Adjacent Channel Interference

The ATSC1-into-ATSC1 interference test was performed for all 6 legacy DTV receivers at weak (-68 dBm), moderate (-53 dBm), and strong (-28 dBm) desired signal levels. The weak and moderate signal interference results showed excellent robustness against first adjacent channel interferers that had little third order intermodulation splatter present. The TOV threshold for strong desired signal levels could not be reached for any of the receivers due the test plan's maximum interference signal value of -8 dBm (denoted with D/U ratios of "< -20 dB"). A summary of the results can be found in **Table F-3** and **Table F-4**.

D/U thresholds at weak and moderate levels had average values for *lower* first adjacent channel interference of about **-44 dB** (or better), which is **11 dB** better than the Recommended ATSC values of -33 dB and **17 dB** better than the average FCC planning factor of -27 dB. This indicates that there is plenty of margin in the lower first adjacent FCC channel planning factor which accounts for high-power transmitter splatter.

D/U thresholds at weak and moderate levels had median values for *upper* first adjacent channel interference of about **-40 dB** (or better), which is **7 dB** better than the Recommended ATSC values of -33 dB and **13 dB** better than the average FCC planning factor of -27 dB. This indicates that there is plenty of margin in the lower first adjacent FCC channel planning factor which accounts for high-power transmitter splatter.

It must be remembered that these interference threshold D/U values are *not* valid representations of the performance in the field since this test uses interference signals with no adjacent channel splatter unlike that expected in the field (e.g., just meeting the FCC emission mask). Care must be taken when interpreting field performance and requirements from this laboratory data.

6.2.4. ATSC3-into-ATSC1 First Adjacent Channel Interference

The ATSC3-into-ATSC1 interference test was performed for all 6 legacy DTV receivers at weak (-68 dBm), moderate (-53 dBm), and strong (-28 dBm) desired signal levels. Once again, the weak and moderate signal interference results showed excellent robustness against first adjacent channel interferers that had little IM3 splatter present. Just as with the lower adjacent channel interference tests, the TOV threshold for strong desired signal levels could not be reached for any of the receivers due the test plan's maximum interference signal value of -8 dBm (denoted with D/U ratios of "< -20 dB"). A summary of the results can be found in **Table F-3** and **Table F-4**.

D/U thresholds at weak and moderate levels had median values for *lower* first adjacent channel interference of about **-43 dB** (or better), which is **10 dB** better than the Recommended ATSC values of -33 dB and **16 dB** better than the average FCC planning factor of -27 dB.

D/U thresholds at weak and moderate levels had median values for *upper* first adjacent channel interference of about **-40 dB** (or better), which is 3 dB better than the Recommended ATSC values of -33 dB and 9 dB better than the average FCC planning factor of -27 dB.

Again, it must be remembered that these interference threshold D/U values are *not* valid representations of the performance in the field since this test uses interference signals with no adjacent channel splatter unlike that expected in the field (e.g., just meeting the FCC emission mask). Care must be taken when interpreting field performance and requirements from this laboratory data.

7. SUMMARY

Pearl retained **MSW** to perform conducted (not radiated) laboratory interference tests on a sampling of 5 recently popular (**2012 - 2015**) ATSC-compatible flat-screen consumer DTV receivers and one older CECB set-top unit. The primary focus of the laboratory testing was the comparison of legacy ATSC1 DTV receiver *interference* performance in the presence of individual legacy 6 MHz ATSC1 (8-VSB) signals and newly-proposed 6 MHz ATSC3 (COFDM) signals. The tests were performed on a calibrated **MSW** test bed using high-quality laboratory test equipment that provided pristine desired and undesired test signals.

MSW proposed a test plan that included a detailed test matrix of both general performance and interference performance tests. This plan contained **6** different test groups comprising a total of **243** individual tests, and included **4** separate ATSC interference signals that contained different sets of transmission parameters that are part of the proposed ATSC3 standard.

The general tests provided a baseline performance of the DTV receivers, and verified acceptable operation and performance of the 6 DTV receivers in terms of dynamic range (sensitivity and overload), white noise threshold, and receiver noise figure.

Two specific type of interference were tested: co-channel and first adjacent channel ATSC1-into-ATSC1 and ATSC3-into-ATSC1 interference. These test results are helpful in predicting interference performance in the future during a transition period when ATSC1 and ATSC3 signals co-exist at the inputs to legacy ATSC1 DTV sets, particularly if they are sharing nearby spectrum that will be repacked following the 600 MHz Spectrum Incentive Auctions[26].

The laboratory test results are summarized in **Table 4** below.

Table 4 Overall summary of laboratory interference test results.

Interference Test Type	Desired Signal Level	FCC Planning Factor	ATSC Suggested Values	ATSC1-into-ATSC1 Interference[1]			ATSC3-into-ATSC1 Interference[2]		
				Mean	Max	Min	Mean	Max	Min
(Co/Lower/Upper Adj CH)	(*)	(dB)	(dB)	(dB)	(dB)	(dB)	(dB)	(dB)	(dB)
Co-Channel	Moderate	**+15**	**+15.5**	**+14.7**	+15.0	+14.6	**+14.9**	+15.2	+14.8
Lower Adjacent Channel	Weak	**-28**	**-33**	**-44.1**	-39.4	-48.1	**-42.8**	-36.3	-47.7
Lower Adjacent Channel	Moderate	**-28**	**-33**	**-44.6**	-41.0	-47.1	**-43.5**	-39.6	-46.7
Lower Adjacent Channel	Strong	**-28**	**-33**	**< -20**	< -20	< -20	**< -20**	< -20	< -20
Upper Adjacent Channel	Weak	**-26**	**-33**	**-40.1**	-35.4	-44.7	**-39.5**	-33.2	-45.4
Upper Adjacent Channel	Moderate	**-26**	**-33**	**-40.8**	-36.0	-47.4	**-41.6**	-34.3	-48.1
Upper Adjacent Channel	Strong	**-26**	**-33**	**< -20**	< -20	< -20	**< -20**	< -20	< -20

Note 1: Statistical values determined for **1** version of ATSC1 signal measured on **6** different legacy DTV receivers.

Note 2: Statistical values determined for **4** versions of ATSC3 signal measured on **6** different legacy DTV receivers.

Co-channel interference tests were performed at a single moderate desired signal level of -53 dBm. These laboratory test results verified that the ATSC1-into-ATSC1 DTV co-channel interference threshold met the 15 dB FCC service planning factor in a consistent manner. Likewise, ATSC3-into-ATSC1 co-channel interference threshold was very similar to ATSC1-into-ATSC1 threshold, showed considerable consistency (i.e., high correlation), and also met the 15 dB FCC service planning factor.

[26] FCC, "Broadcast Television Spectrum Incentive Auction NPRM, Docket 12-268, September 28, 2012.

First adjacent channel interference tests for ATSC1 and ATSC3 were performed at three desired signal levels: strong (-28 dBm), moderate (-53 dBm), and weak (-68 dBm). Since none of the adjacent channel tests that were performed at a strong desired signal level reached error threshold for any of the receivers, the resulting D/U values are recorded as better than **-20 dB** (i.e., < -20 dB). For moderate and weak desired signal levels, ***both*** ATSC1 and ATSC3 first adjacent channel interference test D/U results averaged better than not only the ATSC- recommended value of -33 dB, but also better than the more conservative value of -37 dB. This measured ATSC interference D/U value provides *more* than 10 dB of margin beyond the *average* value of the two current FCC planning factors of -26 dB and -28 dB (upper and lower adjacent channel, respectively) that account for high-power DTV transmitter splatter that just meets the FCC rigid emission mask.

It is important to note that these laboratory tests used *ideal* desired and undesired test signals under *ideal* test conditions, thus *not* simulating typical conditions found in the field, such as *adjacent channel* transmitter splatter. **The use of a transmitter output Mask Filter will continue to be needed for ATSC3, just as in the current ATSC 1 system.** We note that these tests with no non-linear intermodulation allow a good comparison to be made between ATSC1 and ATSC3 interference characteristics of current DTV receivers. Furthermore, we note that care must be taken in directly applying these *specific* adjacent channel interference laboratory test results directly to any planning factors used in the spectrum allocation process. The RF Mask Filter attenuation should be considered as well in development of planning factors.

Nevertheless, the test results illustrate that the effects for ATSC1-into-ATSC1 and ATSC3-into-ATSC1 co-channel and first adjacent channel interference were found to be comparable in these laboratory tests. Consequently, no change is needed to the OET Bulletin 69 co-channel and first adjacent channel planning factors for the new ATSC3 transmission system, therefore allowing both ATSC1 and ATSC3 signals to co-exist using current FCC planning factors, assuming the same FCC emission mask requirements are met at the transmitter.

8. ACKNOWLEDGEMENTS

As with any project of this magnitude, a group of people contributed to the successful result: Kevin Shelby, Michael Solka, and Oliver Werther of Coherent Logix as well as Dennis Wallace, Gary Sgrignoli, and William Meintel of MSW.

APPENDIX A: TEST LABORATORY PHOTOS

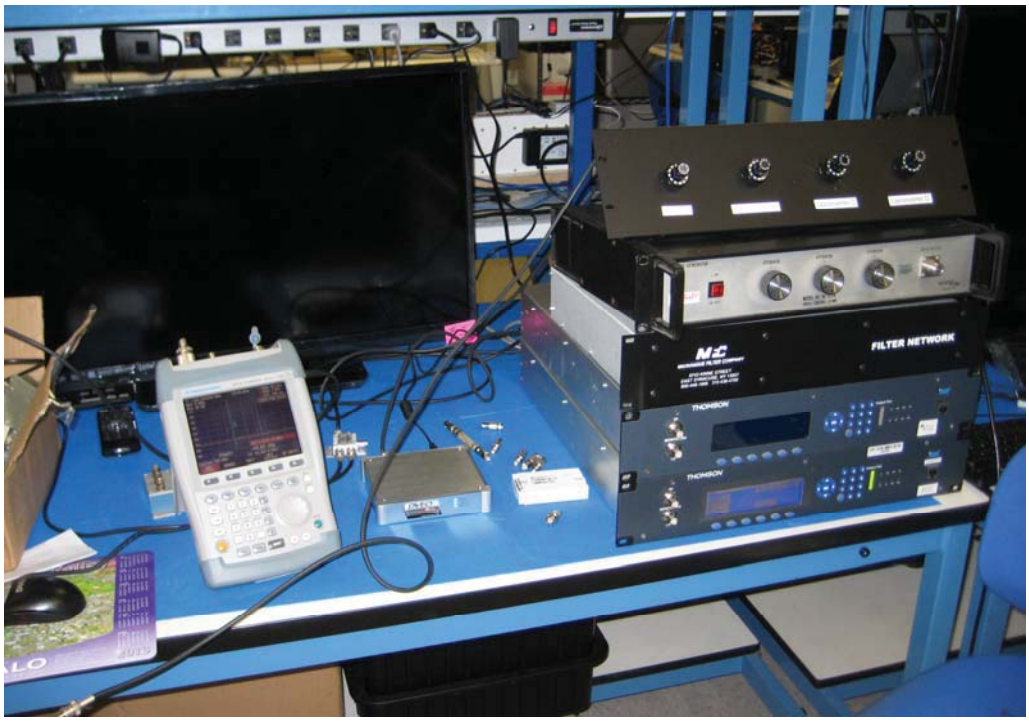

Figure A-1a Laboratory test bed setup.

Figure A-1b Laboratory test bed setup.

APPENDIX B: LABORATORY TEST PLAN MATRIX

Table B-1 Laboratory test matrix.

Test Ref #	Specific Laboratory Test Description	General Test Comments	# of Test RXs	# of Test Signals	Desired CH #	Desired Signal Type[1]	Desired Signal Level	Undesired Signal Type[1,2,3]	Undesired Signal #1 Level[1,4]	Total # of Tests
(#)	(*)	(*)	(#)	(#)	(#)		(dBm)	(*)	(dBm)	(#)
1a	**ATSC1** Signal Characterization[5]	No Impairment	---	1	26	**ATSC1**	-53	NA[1]	NA[1]	3
1b	**ATSC3** Signal Characterization[6]	No Impairment	---	12	26	**ATSC1**	-53	NA[1]	NA[1]	12
2	Signal Sensitivity	No Impairment	6	1	26	**ATSC1**	Vary	NA[1]	NA[1]	6
3	Signal Overload	No Impairment	6	1	26	**ATSC1**	Vary	NA[1]	NA[1]	6
4	White Noise Threshold	Single Impairment	6	1	26	**ATSC1**	-53	White Noise	Vary[4]	6
5a	Co-Channel Interference	**ATSC1**-into-**ATSC1**	6	1	26	**ATSC1**	-53	**ATSC1** (26)	Vary[4]	6
5b	Co-Channel Interference	**ATSC3**-into-**ATSC1**	6	1	26	**ATSC1**	-53	**ATSC3** (26)	Vary[4]	24
6a	Single Adjacent Channel Interference	**ATSC1**-into-**ATSC1**	6	2	26	**ATSC1**	-28, -53, -68	**ATSC1** (25,27)	Vary[4]	36
6b	Single Adjacent Channel Interference	**ATSC3**-into-**ATSC1**	6	2	26	**ATSC1**	-28, -53, -68	**ATSC3** (25,27)	Vary[4]	144
---	**TOTAL**	-----	---	---	---		-----	-----	-----	**243**

Note 1: "NA" means Not Applicable.

Note 2: The numbers in the *parenthesis* represent the interference channels used.

Note 3: **ATSC1** describes the legacy 6 MHz ATSC 1.0 single-carrier 8-VSB signal; **ATSC3** describes 4 characteristic types (# of carriers, modulation levels, etc.) contained in the recently-proposed 6 MHz ATSC 3.0 multi-carrier COFDM signal.

Note 4: "Vary" means either the desired signal level (sensitivity or overload) or interferer/impairment signal level (AWGN, Co-CH, or Adj CH) is varied until TOV is reached.

Note 5: Signal characterization means in-band spectrum plot, out-of-band spectrum plot, and PAPR/CF measurement of the 1 type of ATSC1 transmission signal:

ATSC1 = 8-VSB

Note 6: Signal characterization means in-band spectrum plot, out-of-band spectrum plot, and PAPR/CF measurement of the 4 types of ATSC3 transmission signals:

ATSC3-A = 32K / 64-QAM
ATSC3-B = 32K / 256-QAM
ATSC3-C = 16K / 256-QAM
ATSC3-D = 8K / 64-QAM

Table B-2 ATSC3 test signal parameters.

Transmission Parameter (*)	ATSC3-A (*)	ATSC3-B (*)	ATSC3-C (*)	ATSC3-D (*)
Modulation Type	COFDM[1]	COFDM[1]	COFDM[1]	COFDM[1]
Channel Bandwidth in MHz	6.0	6.0	6.0	6.0
Occupied Channel BW in MHz[2]	5.7	5.7	5.7	5.7
# of Sub-carriers	27022	27022	13511	6755
Sub-Carrier Spacing	210.9	210.9	412.9	843.8
Guard Interval	256	256	256	256
FFT Size	**32k**	**32k**	**16k**	**8k**
Channel Modulation	**64-QAM**	**256-QAM**	**256-QAM**	**64-QAM**
FEC Type	Turbo	Turbo	Turbo	Turbo
FEC Rate	1/3	1/3	1/3	1/3
Pilot Pattern / Density	1:10x10	1:10x10	1:10x10	1:10x10
Test Data Pattern	PRBS[3]	PRBS[3]	PRBS[3]	PRBS[3]

Note 1: COFDM is Coded Orthogonal Frequency Domain Modulation.

Note 2: 95% of signal power is contained in this bandwidth.

Note 3 Pseudo-Random Binary Stream (or Sequence).

APPENDIX C: TEST BED BLOCK DIAGRAMS

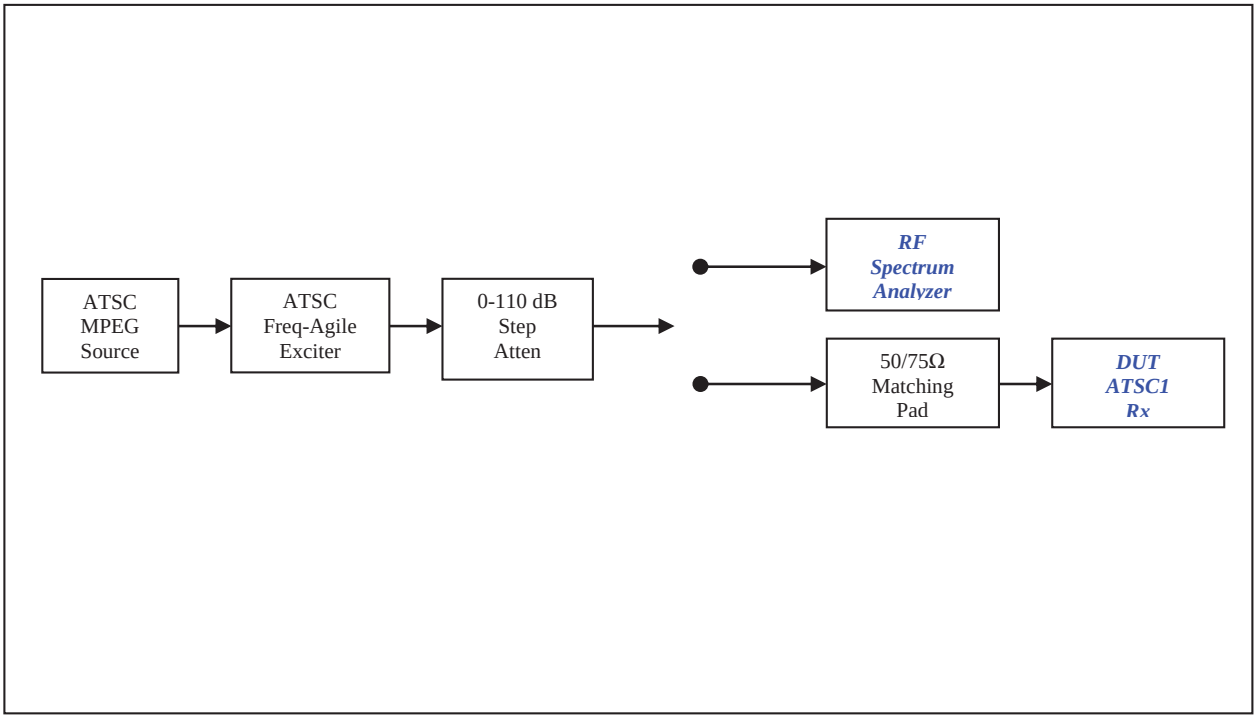

Figure C-1 Block diagram for sensitivity and overload threshold tests.

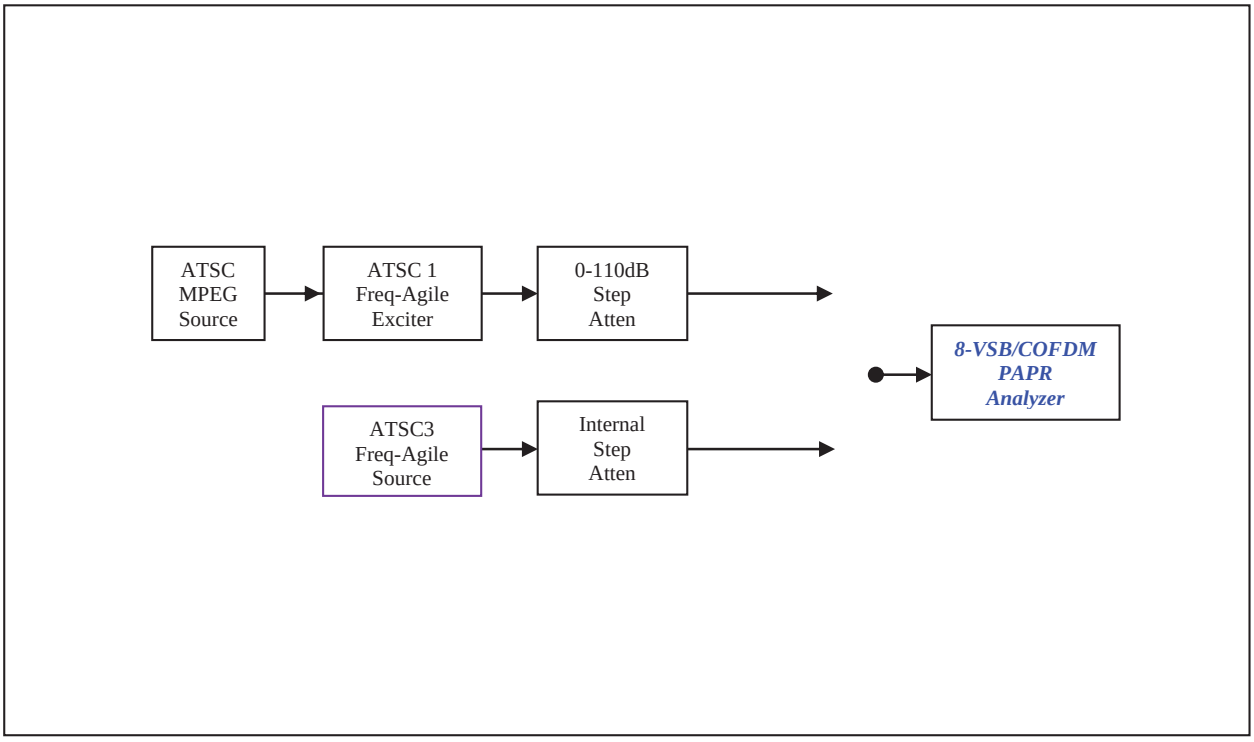

Figure C-2 Block diagram for PAPR evaluation.

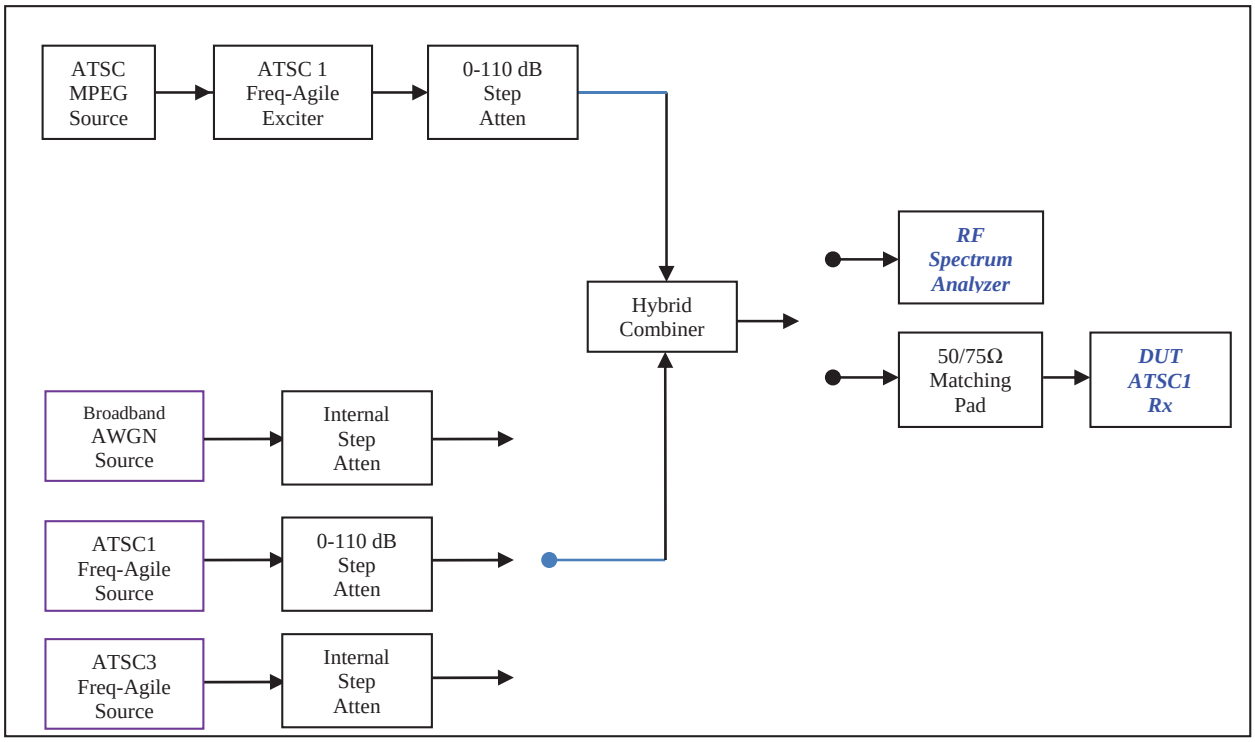

Figure C-3 Block diagram for AWGN and co-channel threshold tests.

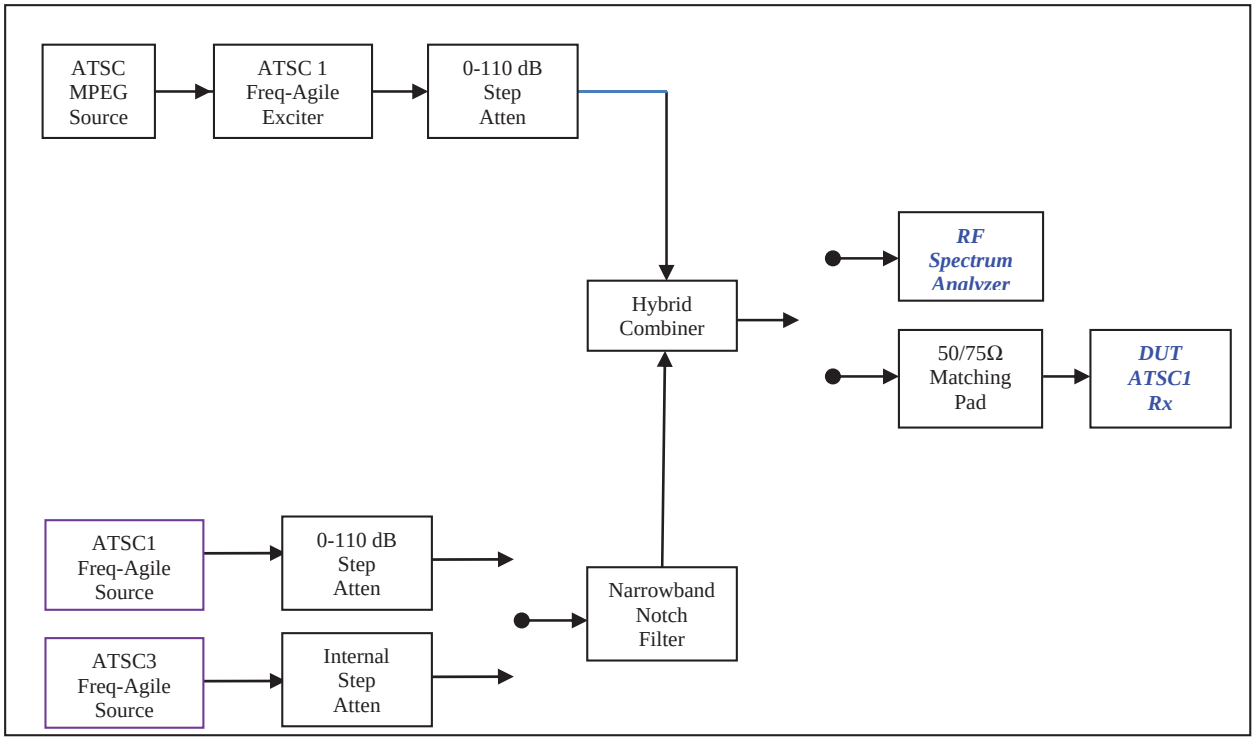

Figure C-4 Block diagram for first adjacent channel threshold tests.

APPENDIX D: DTV RF Component Descriptions

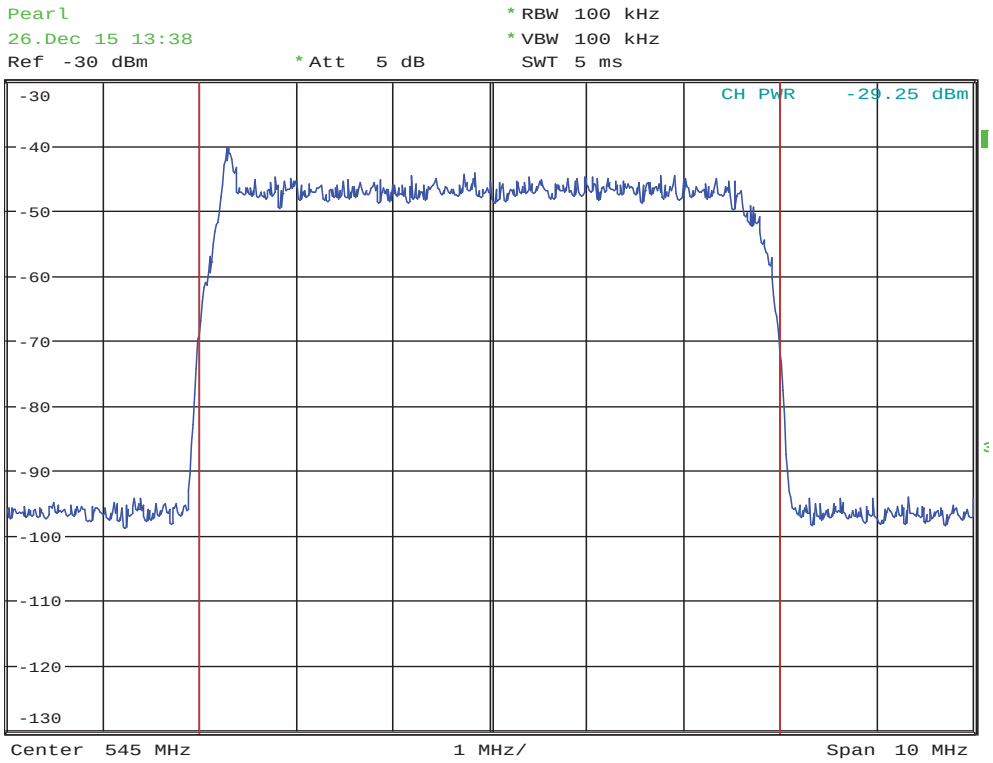

Figure D-1a ATSC1 source on CH 26 (545 MHz): RF signal spectrum plot.

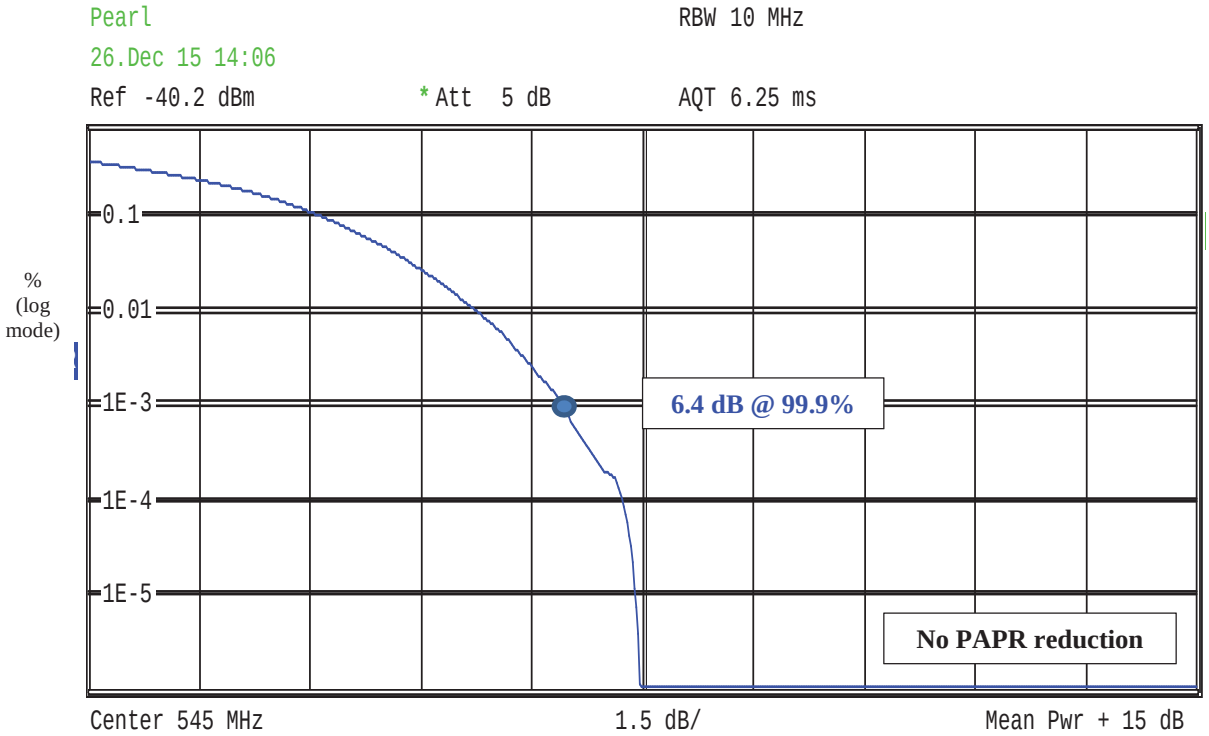

Figure D-1b ATSC1 source on CH 26 (545 MHz): RF signal envelope CCDF plot.

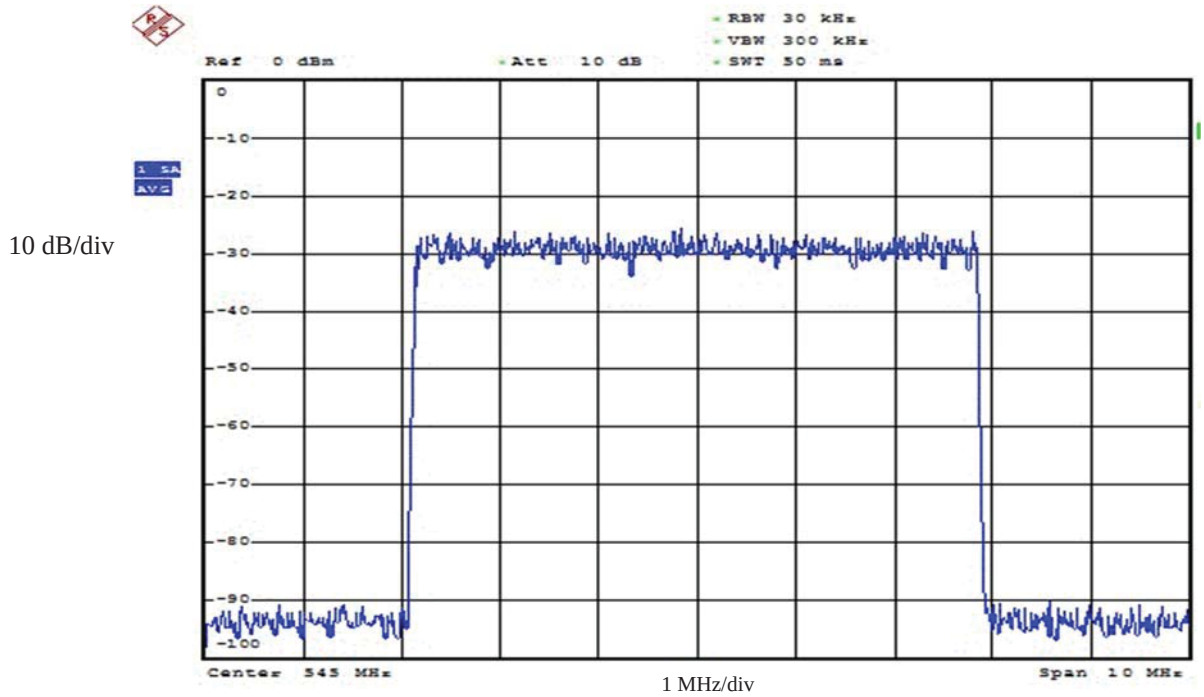

Figure D-2a ATSC3 source on CH 26 (545 MHz): RF signal spectrum plot.

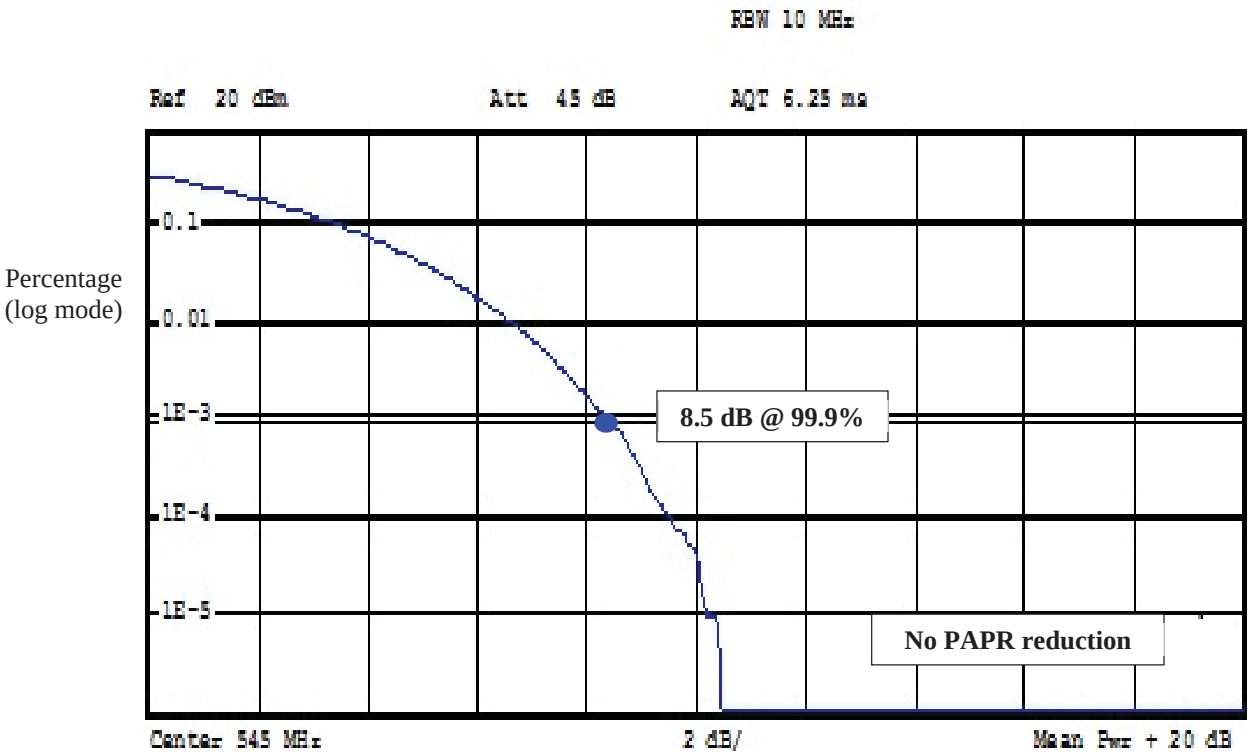

Figure D-2b ATSC3 source on CH 26 (545 MHz): RF signal envelope CCDF plot.

APPENDIX E: LABORATORY TEST BED DYNAMIC RANGE

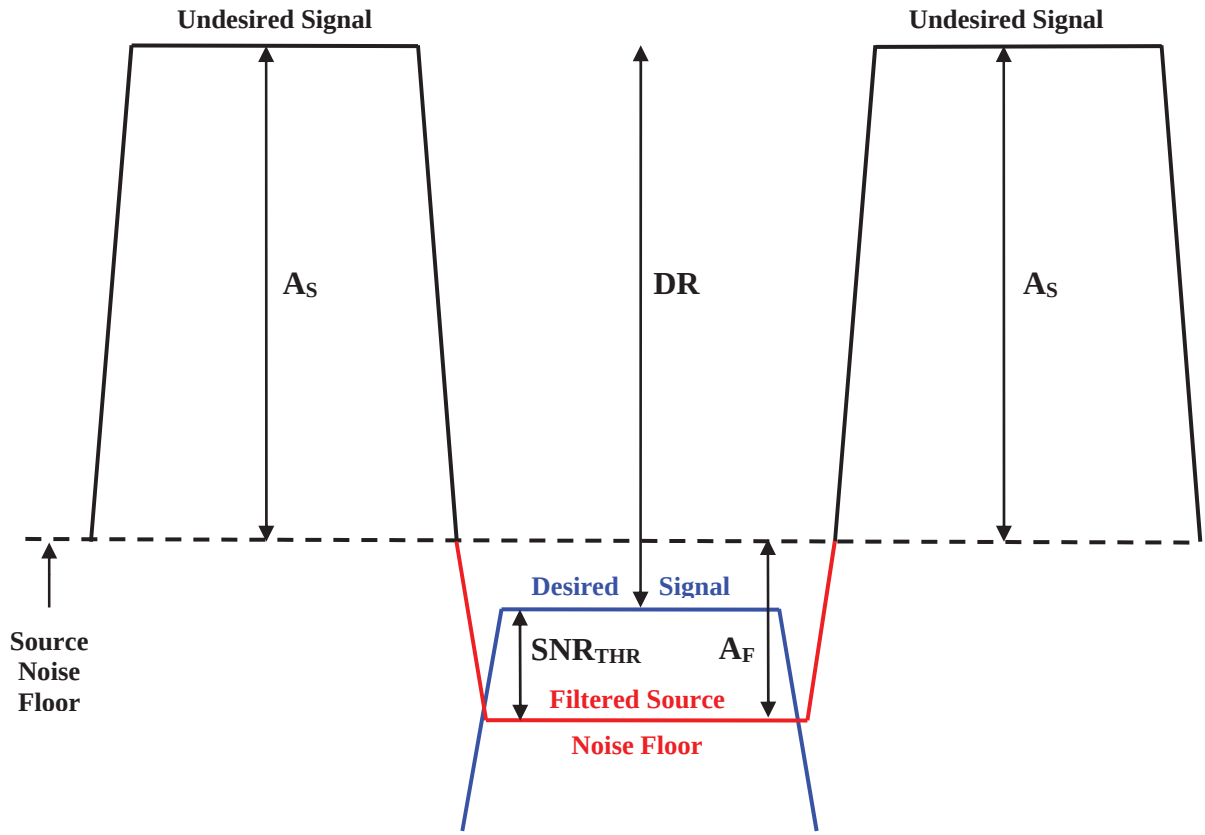

A_S ≡ **Undesired signal sideband noise in the adjacent channel**

A_F ≡ ***Integrated* band-stop filter & RRC attenuation @ CH 26** **(for either *narrow* or *wide* filter)**

SNR_{THR} ≡ **SNR at TOV ≈ 15 dB** **(for 8-VSB system)**

DR ≡ Dynamic Range of Test Bed (in dB)

$$\text{DR (in dB)} = A_{Sk} + A_F - SNR_{THR} = A_{Sk} + A_F - 15 = -\text{D/U}$$

Figure E-1 Laboratory test bed dynamic range definition and diagram.

APPENDIX F: TEST RESULTS

The primary focus of this laboratory test was to investigate the interference susceptibility of 5 recent-model (**2012 – 2015**) legacy DTV receivers that represent a significant portion of the U.S. sales during this time and 1 older (2008) CECB unit operating in the UHF band. This interference is from other occupants of the UHF TV spectrum, including other legacy ATSC1 broadcast signals as well as newly-proposed ATSC3 broadcast signals. The desired DTV RF signal test channel was selected to be CH 26 (545 MHz), somewhere *near* the middle of the current UHF television band (i.e., prior to any spectrum repacking). Undesired signals were placed on CH 25 through CH 27, as called for in the test plan matrix.

All interference threshold test results are represented logarithmically (in dB) as desired-to-undesired (D/U) ratios, where the D/U ratio is *positive* if the undesired signal U is less than the desired signal D, and it is *negative* if the undesired signal U is greater than the desired signal D.

When the desired signal level D was not varied (i.e., at a fixed level), it was set to one of three test levels: strong (-28 dBm), moderate (-53 dBm), or weak (-68 dBm). The largest undesired interference signal level utilized in this laboratory test, as called for in the test plan, is -5 dBm. If during interference testing no errors could be generator in a DTV set under this large signal interferer condition, this condition was noted by denoting the results with a "<" sign to show that the D/U ratio was less than (i.e., better than) the calculated value.

The following tables represent the test results calculated directly from the raw measured test data for the ATSC1 (1 version) and ATSC3 (all 4 versions) interferers obtained in the laboratory. The test data is logically grouped together, and referenced in the main body of the report by the **Table** numbers. The RF interference D/U summary tables include statistics for:

(1) One type of interferer signal (ATSC1 or one type of ATSC3) for 6 legacy ATSC1 receivers.
(2) One receiver for all 4 types of ATSC3 interferer signals.
(3) Six receivers for all 4 types of ATSC3 interferer signals (i.e., a comprehensive analysis).

Table F-1a Dynamic range, sensitivity, overload, noise threshold, and noise figure for 6 DTV receivers.

Test Receiver (#)	Sensitivity Threshold[1] (dBm)	Overload Threshold [2, 3, 7] (dBm)	Dynamic Range [4, 7] (dB)	SNR Threshold [5] (dB)	Noise Figure [6] (dB)
1	-84.6	> -5	> 79	14.6	7.0
2	-86.7	> -5	> 79	14.6	4.9
3	-85.4	> -5	> 79	14.7	6.1
4	-85.4	> -5	> 79	14.7	6.1
5	-86.5	> -5	> 79	14.5	5.2
6	-86.6	> -5	> 79	14.8	4.8
A/74	**-83.0**	**> -5**	**> 78**	**15.5**	**7.0**
FCC	**-84.0**	*	*	**15.0**	**7.0**
Mean [8]	-85.9	-----	-----	14.7	5.7
Maximum [8]	-84.6	-----	-----	14.8	7.0
Minimum [8]	-86.7	-----	-----	14.5	4.8

[1] Sensitivity S_{MIN}, in dBm, was determined by *lowering* the CH 26 ATSC1 DTV signal in 0.1 dB steps until TOV occurred.
[2] Overload S_{MAX}, in dBm, was determined by *increasing* the CH 26 ATSC1 DTV signal until TOV occurred **or** -5 dBm was reached.
[3] Receivers with measured threshold above -5 dBm, and therefore TOV could *not* be reached, are denoted with "> -5".
[4] Dynamic Range (DR), in dB, is calculated difference between CH 26 overload and sensitivity values, i.e., DR = S_{MAX} - S_{MIN}.
[5] Noise threshold of visibility (TOV) measured with *externally* added white Gaussian noise (AWGN) to CH 26 DTV *moderate* signal level (-53 dBm), and measured with 0.1 dB attenuation steps. An often-*assumed* industry value is that this parameter should be < 15 dB.
[6] Noise Figure (NF, in dB) is calculated using actual white noise threshold (TOV in dB) but *assumes* ideal kTB (in dBm) of -106.2 dBm/6 MHz @ T=25 degrees Celsius in *matched* 75-Ω system. That is, ideal sensitivity S_{MIN} = kTB + NF + TOV = -106.2 + 7 +15 = -84.2 dBm. Noise Figure is calculated as: NF = S_{MIN} - kTB - TOV.
[7] Note that a ">" sign indicates that threshold of errors was ***not*** reached in the test bed; NA means not applicable.
[8] Statistics here are calculated only for 6 DTV receivers (5 DTV sets & 1 CECB set-top box), which is not a statistically relevant # of units.

Table F-1b PAPR and CF values for ATSC1 and ATSC3 interference test signals.

Interference Signal -----	Modulation Type -----	PAPR No Reduction dB @ 0.1%	PAPR With Reduction dB @ 0.1%	Crest Factor No Reduction dB	Crest Factor With Reduction dB
ATSC1	8-VSB	6.4	-----	7.5	-----
ATSC3-A	COFDM, 32k / 64-QAM	8.4	8.4	10.9	10.1
ATSC3-B	COFDM, 32k / 256-QAM	8.5	8.5	10.4	10.0
ATSC3-C	COFDM, 16k, 256-QAM	8.5	8.2	11.2	9.4
ATSC3-D	COFDM, 8k, 64-QAM	8.4	8.3	10.9	9.2
ATSC3 Ave	-----	8.4	8.4	10.9	9.7
ATSC3 Max	-----	8.5	8.5	11.2	10.1
ATSC3 Min	-----	8.4	8.2	10.4	9.2

Table F-2 Co-Channel interference into ATSC1 at *moderate* signal level for 6 DTV receivers.

Test Receiver (#)	ATSC1 D/U THR (dB)	ATSC3-A D/U THR (dB)	ATSC3-B D/U THR (dB)	ATSC3-C D/U THR (dB)	ATSC3-D D/U THR (dB)	ATSC3 D/U Mean (dB)	ATSC3 D/U Max (dB)	ATSC3 D/U Min (dB)
1	15.0	14.9	14.8	14.9	15.1	14.9	15.1	14.8
2	14.8	14.9	14.8	14.8	15.0	14.9	15.0	14.8
3	14.7	15.0	14.9	14.8	15.1	15.0	15.1	14.8
4	14.6	14.9	14.8	14.9	15.0	14.9	15.0	14.8
5	14.6	15.0	15.0	14.9	15.2	15.0	15.2	14.9
6	14.7	15.0	14.9	14.9	15.1	15.0	15.1	14.9
A/74	15.5	15.5	15.5	15.5	15.5	15.5	15.5	15.5
FCC	15.0	15.0	15.0	15.0	15.0	15.0	15.0	15.0
Mean [2]	**14.7**	14.9	14.9	14.9	15.1	**14.9**		
Max [2]	**15.0**	15.0	15.0	14.9	15.2	**15.2**		
Min [2]	**14.6**	14.9	14.8	14.8	15.0	**14.8**		

[1] The desired CH 26 signal level was adjusted to a moderate level of -53 dBm while the undesired CH 26 interferer level was increased.
[2] Statistics are calculated for either 6 DTV receivers (5 DTV sets plus 1 CECB set-top unit), 4 ATSC3 signals, or both.

Table F-3a Lower adjacent channel interference into ATSC1 at *weak* signal level for 6 receivers.

Test Receiver (#)	ATSC1 D/U THR (dB)	ATSC3-A D/U THR (dB)	ATSC3-B D/U THR (dB)	ATSC3-C D/U THR (dB)	ATSC3-D D/U THR (dB)	ATSC3 D/U Mean (dB)	ATSC3 D/U Max (dB)	ATSC3 D/U Min (dB)
1	-42.3	-39.9	-39.5	-40.5	-39.5	-39.9	-39.5	-40.5
2	-44.2	-43.8	-43.4	-43.6	-43.3	-43.5	-43.3	-43.8
3	-44.3	-43.7	-43.6	-43.5	-43.5	-43.6	-43.5	-43.7
4	-48.1	-47.7	-47.4	-47.5	-47.3	-47.5	-47.3	-47.7
5	-46.3	-45.9	-45.7	-45.6	-45.5	-45.7	-45.5	-45.9
6	-39.4	-36.8	-36.4	-36.5	-36.3	-36.5	-36.3	-36.8
A/74	-27.0	-27.0	-27.0	-27.0	-27.0	-27.0	-27.0	-27.0
FCC	-28.0	-28.0	-28.0	-28.0	-28.0	-28.0	-28.0	-28.0
Mean [2]	**-44.1**	-43.0	-42.7	-42.9	-42.6	**-42.8**		
Max [2]	**-39.4**	-36.8	-36.4	-36.5	-36.3	**-36.3**		
Min [2]	**-48.1**	-47.7	-47.4	-47.5	-47.3	**-47.7**		

[1] The desired CH 26 signal level was adjusted to a weak level of -68 dBm while the undesired CH 25 interferer level was increased.
[2] The statistics in this table are calculated for either 6 DTV receivers (5 DTV sets plus 1 CECB set-top unit), 4 ATSC3 signals, or both.

Table F-3b Lower adjacent channel interference into ATSC1 at *moderate* signal level for 6 receivers.

Test Receiver (#)	ATSC1 D/U THR (dB)	ATSC3-A D/U THR (dB)	ATSC3-B D/U THR (dB)	ATSC3-C D/U THR (dB)	ATSC3-D D/U THR (dB)	ATSC3 D/U Mean (dB)	ATSC3 D/U Max (dB)	ATSC3 D/U Min (dB)
1	-41.0	-39.6	-40.7	-39.8	-39.9	-40.0	-39.6	-40.7
2	-46.2	-43.6	-43.7	-41.7	-42.6	-42.9	-41.7	-43.7
3	-45.0	-43.7	-43.7	-42.8	-43.7	-43.5	-42.8	-43.7
4	-47.1	-46.6	-46.6	-46.6	-46.7	-46.6	-46.6	-46.7
5	-46.0	-45.6	-45.6	-45.6	-45.7	-45.6	-45.6	-45.7
6	-42.1	-42.7	-42.6	-41.7	-41.7	-42.2	-41.7	-42.7
A/74	-27.0	-27.0	-27.0	-27.0	-27.0	-27.0	-27.0	-27.0
FCC	-28.0	-28.0	-28.0	-28.0	-28.0	-28.0	-28.0	-28.0
Mean [2]	**-44.6**	-43.7	-43.8	-43.0	-43.4	**-43.5**		
Max [2]	**-41.0**	-39.6	-40.7	-39.8	-39.9	**-39.6**		
Min [2]	**-47.1**	-46.6	-46.6	-46.6	-46.7	**-46.7**		

[1] The desired CH 26 signal level was adjusted to a moderate level of -53 dBm while the undesired CH 25 interferer level was increased.
[2] The statistics in this table are calculated for either 6 DTV receivers (5 DTV sets plus 1 CECB set-top unit), 4 ATSC3 signals, or both.

Table F-3c Lower adjacent channel interference into ATSC1 at *strong* signal level for 6 receivers.

Test Receiver (#)	ATSC1 D/U THR (dB)	ATSC3-A D/U THR (dB)	ATSC3-B D/U THR (dB)	ATSC3-C D/U THR (dB)	ATSC3-D D/U THR (dB)	ATSC3 D/U Mean (dB)	ATSC3 D/U Max (dB)	ATSC3 D/U Min (dB)
1	< -20	< -20	< -20	< -20	< -20	< -20	< -20	< -20
2	< -20	< -20	< -20	< -20	< -20	< -20	< -20	< -20
3	< -20	< -20	< -20	< -20	< -20	< -20	< -20	< -20
4	< -20	< -20	< -20	< -20	< -20	< -20	< -20	< -20
5	< -20	< -20	< -20	< -20	< -20	< -20	< -20	< -20
6	< -20	< -20	< -20	< -20	< -20	< -20	< -20	< -20
A/74	-27.0	-27.0	-27.0	-27.0	-27.0	-27.0	-27.0	-27.0
FCC	-28.0	-28.0	-28.0	-28.0	-28.0	-28.0	-28.0	-28.0
Mean [2]	**< -20**	< -20	< -20	< -20	< -20	**< -20**		
Max [2]	**< -20**	< -20	< -20	< -20	< -20	**< -20**		
Min [2]	**< -20**	< -20	< -20	< -20	< -20	**< -20**		

[1] The desired CH 26 signal level was adjusted to a strong level of -28 dBm while the undesired CH 25 interferer level was increased.
[2] The statistics in this table are calculated for either 6 DTV receivers (5 DTV sets plus 1 CECB set-top unit), 4 ATSC3 signals, or both.

Table F-4a Upper adjacent channel interference into ATSC1 at *weak* signal level for 6 receivers.

Test Receiver (#)	ATSC1 D/U THR (dB)	ATSC3-A D/U THR (dB)	ATSC3-B D/U THR (dB)	ATSC3-C D/U THR (dB)	ATSC3-D D/U THR (dB)	ATSC3 D/U Mean (dB)	ATSC3 D/U Max (dB)	ATSC3 D/U Min (dB)
1	-40.8	-39.2	-40.2	-38.2	-39.2	-39.2	-38.2	-40.2
2	-39.4	-39.3	-38.2	-39.2	-38.2	-38.7	-38.2	-39.3
3	-35.4	-34.3	-32.2	-32.3	-35.2	-33.5	-32.2	-35.2
4	-44.4	-44.5	-42.4	-43.3	-45.3	-43.9	-42.4	-45.3
5	-44.7	-45.4	-43.3	-44.3	-45.4	-44.6	-43.3	-45.4
6	-35.7	-37.2	-36.5	-37.1	-37.3	-37.0	-36.5	-37.3
A/74	-27.0	-27.0	-27.0	-27.0	-27.0	-27.0	-27.0	-27.0
FCC	-26.0	-26.0	-26.0	-26.0	-26.0	-26.0	-26.0	-26.0
Mean [2]	**-40.1**	-40.0	-38.8	-39.1	-40.1	**-39.5**		
Max [2]	**-35.4**	-34.3	-32.2	-32.3	-35.2	**-32.2**		
Min [2]	**-44.7**	-45.4	-43.3	-44.3	-45.4	**-45.4**		

[1] The desired CH 26 signal level was adjusted to a weak level of -68 dBm while the undesired CH 27 interferer level was increased.
[2] The statistics in this table are calculated for either 6 DTV receivers (5 DTV sets plus 1 CECB set-top unit), 4 ATSC3 signals, or both.

Table F-4b Upper adjacent channel interference into ATSC1 at *moderate* signal level for 6 receivers.

Test Receiver (#)	ATSC1 D/U THR (dB)	ATSC3-A D/U THR (dB)	ATSC3-B D/U THR (dB)	ATSC3-C D/U THR (dB)	ATSC3-D D/U THR (dB)	ATSC3 D/U Mean (dB)	ATSC3 D/U Max (dB)	ATSC3 D/U Min (dB)
1	-40.5	-40.1	-40.1	-41.1	-41.2	-40.6	-40.1	-41.2
2	-40.3	-42.1	-42.1	-42.1	-40.2	-41.6	-40.2	-42.1
3	-37.9	-35.3	-35.3	-36.3	-34.3	-35.3	-34.3	-36.3
4	-47.4	-47.1	-48.1	-48.1	-47.1	-47.6	-47.1	-48.1
5	-42.9	-46.1	-47.1	-47.1	-45.0	-46.3	-45.0	-47.1
6	-36.0	-38.2	-38.4	-38.2	-38.4	-38.3	-38.2	-38.4
A/74	-27.0	-27.0	-27.0	-27.0	-27.0	-27.0	-27.0	-27.0
FCC	-26.0	-26.0	-26.0	-26.0	-26.0	-26.0	-26.0	-26.0
Mean [2]	**-40.8**	-41.5	-41.8	-42.2	-41.0	**-41.6**		
Max [2]	**-36.0**	-35.3	-35.3	-36.3	-34.3	**-34.3**		
Min [2]	**-47.4**	-47.1	-48.1	-48.1	-47.1	**-48.1**		

[1] The desired CH 26 signal level was adjusted to a moderate level of -53 dBm while the undesired CH 27 interferer level was increased.
[2] The statistics in this table are calculated for either 6 DTV receivers (5 DTV sets plus 1 CECB set-top unit), 4 ATSC3 signals, or both.

Table F-4c Upper adjacent channel interference into ATSC1 at *strong* signal level for 6 receivers.

Test Receiver (#)	ATSC1 D/U THR (dB)	ATSC3-A D/U THR (dB)	ATSC3-B D/U THR (dB)	ATSC3-C D/U THR (dB)	ATSC3-D D/U THR (dB)	ATSC3 D/U Mean (dB)	ATSC3 D/U Max (dB)	ATSC3 D/U Min (dB)
1	< -20	< -20	< -20	< -20	< -20	< -20	< -20	< -20
2	< -20	< -20	< -20	< -20	< -20	< -20	< -20	< -20
3	< -20	< -20	< -20	< -20	< -20	< -20	< -20	< -20
4	< -20	< -20	< -20	< -20	< -20	< -20	< -20	< -20
5	< -20	< -20	< -20	< -20	< -20	< -20	< -20	< -20
6	< -20	< -20	< -20	< -20	< -20	< -20	< -20	< -20
A/74	-27.0	-27.0	-27.0	-27.0	-27.0	-27.0	-27.0	-27.0
FCC	-26.0	-26.0	-26.0	-26.0	-26.0	-26.0	-26.0	-26.0
Mean [2]	**< -20**	< -20	< -20	< -20	< -20	**< -20**		
Max [2]	**< -20**	< -20	< -20	< -20	< -20	**< -20**		
Min [2]	**< -20**	< -20	< -20	< -20	< -20	**< -20**		

[1] The desired CH 26 signal level was adjusted to a strong level of -28 dBm while the undesired CH 27 interferer level was increased.
[2] The statistics in this table are calculated for either 6 DTV receivers (5 DTV sets plus 1 CECB set-top unit), 4 ATSC3 signals, or both.

Attachment C

Proposed Revision of Relevant Parts 73, 74 and 76 to Accomplish Implementation Plan

1. §73.616 is revised by adding a new subsection (g) as follows:

§73.616 Post-transition DTV station interference protection.

* * *

(g) The interference protection requirements contained in this section apply to television station operations under ATSC A/321.

2. Section 73.682 is revised to add new subsections (f) and (g) as follows:

§73.682 TV transmission standards.

* * *

(f) *Alternative Transmission Standard Authorized.* Effective [DATE], as an alternative to complying with the requirements set forth in subsection (d) above, transmission of digital broadcast television (DTV) signals may comply with the standards for such transmissions set forth in ATSC A/321. ATSC A/321 is available from Advanced Television Systems Committee (ATSC), 1776 K Street, NW., 8th Floor, Washington, DC 20006, or at the ATSC Web site: *http://www.atsc.org/standards.html*.

(g) *Continuity.* The licensee of a station operating pursuant to subsection (f) shall arrange for another DTV station (if any) operating in compliance with subsection (d) and substantially covering such station's community of license to simulcast such station's primary program stream for a period of time consistent with local market conditions. Agreements for simulcast under this subsection (g) must be filed with the FCC.

3. §73.8000 is revised to add a new subsection (b)(6) as follows:
§73.8000 Incorporation by reference.

* * *

(b) * * *

(6) A/321:2016, "System Discovery and Signaling" dated March 23, 2016. IBR approved for §73.682.

4. §76.56 is revised to add a new subsection (g) as follows:
§76.56 Signal carriage obligations.

* * *

(g) *Notice of A/321 transmissions.* A television station carried pursuant to a must-carry obligation shall give a satellite carrier at least sixty days advance written notice before initiating A/321 transmissions. A cable system shall not be

obligated to carry a new A/321 transmission of a station such cable system retransmits pursuant to such station's mandatory carriage rights until sixty days after such station gives notice of initiation of A/321 transmissions.

5. §76.66 is revised to add a new subsection (g)(4) as follows:

§76.66 Satellite broadcast signal carriage.

(g) *Good quality signal.*

* * *

(4) A television station carried pursuant to a mandatory carriage obligation shall give a satellite carrier at least sixty days advance written notice before initiating A/321 transmissions. A satellite carrier shall not be obligated to carry a new A/321 transmission of a station such satellite carrier retransmits pursuant to such station's mandatory carriage rights until sixty days after station gives notice of initiation of A/321 transmissions.