Application of Google Inc. for Certification to Provide Spectrum Access System and Environmental Sensing Capability Services

GN Docket No. 15-319

Appendix E: Effect of Clutter on Radio Propagation at 3.5 GHz

3.5 GHz Propagation Measurements
Status Update

Andrew Clegg

March 8th, 2016

Introduction

- This is an update of 3.5 GHz propagation measurements being conducted by Google under experimental license WH2XNF
- Measurements are ongoing
- Results presented here are subject to change
- Primary goal is to compare measurements to predictions to quantify the impact of clutter
  - Current analysis uses Longley-Rice F(50,50) as reference model
- Additional goal, presently under development, is to utilize the results to parameterize the effects of discrete clutter objects, and to statistically bound the impact of clutter in a predictive model

Summary

- Propagation measurements are being conducted at 3.5 GHz to quantize the impact of clutter, where “clutter” refers to buildings and foliage along the propagation path
- To date, approximately 1.7E6 measurements have been made in two separate geographic areas:
  - The majority of measurements have been made in a heavily cluttered environment on the east coast
  - Additional measurements have been made in a light-to-moderate clutter environment on the west coast
- The initial goals of the project are to:
  - Compare the measurement results with those predicted by commonly-used propagation models
  - Quantify the effects of buildings and of foliage along the propagation path
  - Quantify the effects of height relative to the surrounding clutter

Transmitter Hardware Configuration

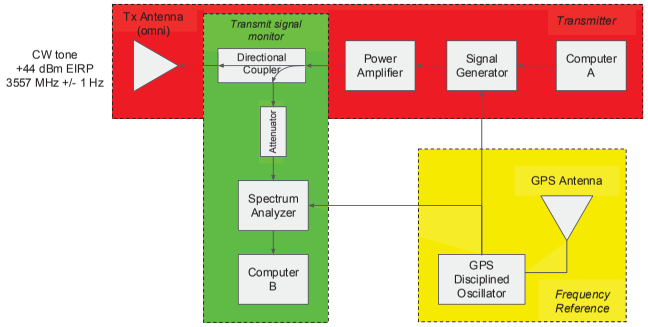

Google

Transmitter (Typical Outdoor Configuration)

Google

Transmitter (Typical Indoor Configuration)

Google

Transmitter (Rooftop Configuration)

Google

Receiver Hardware Configuration

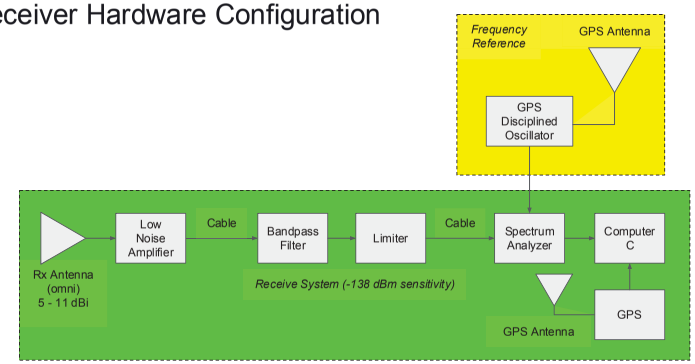

Google

Vehicle-Mounted Receiver System

Google

Propagation Loss Measurement Range

- Tx power: +44 dBm EIRP
- Rx sensitivity: -142 dBm (w/ 11 dBi rx antenna)
- Maximum measurable propagation loss: ~186 dB
  - Equivalent to 13,400 km of free space loss, no clutter
  - Equivalent to ~75 km trans-horizon over-ocean LR loss (diffraction region)
  - Equivalent to ~few km in clutter

Google

Primary Measurement Environment

- Arlington, Virginia
- Core test area is within the urban Metro corridor, surrounded by dense suburban
- Transmitter installed outdoors and indoors, on various floors, in a high-rise apartment building that is one of the taller buildings in its area

Google

Range of Tested Parameters

- Outdoor & indoor
- Summer and winter
- Dry/rain/snow
- Mobile/stationary
- Different tx heights above ground level
  - 2nd floor, 6.1 m
  - 6th floor, 17.4 m (outdoor only)
  - 12th floor, 33.1 m
  - 16th floor, 43.9 m
  - Rooftop (~23 floor), 63.4 m (outdoor only)

Transmitter Location

Transmitter Location
I-66
Tx Bldg
Rt. 50
DARPA
Ballston Metro
Washington-Lee
High School
Glebe Rd
Clarendon

Transmitter Locations
Vertical stack
Rooftop
Location

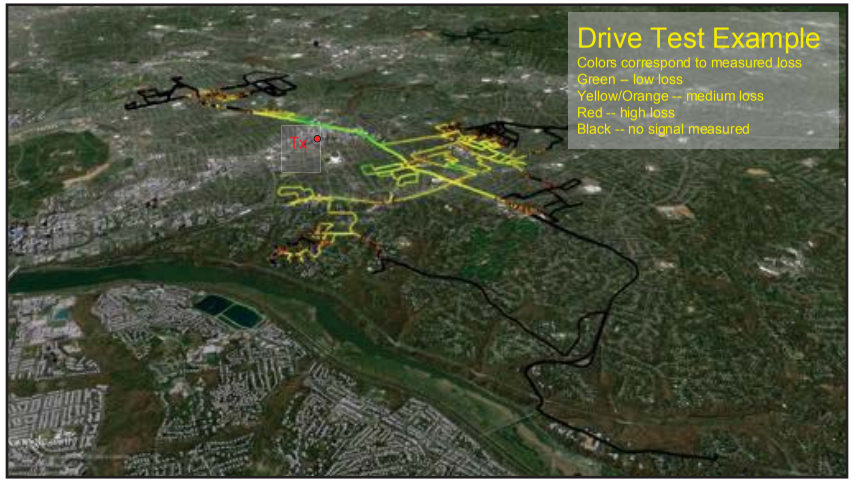
Drive Test Example
Colors correspond to measured loss
Green -- low loss
Yellow/Orange -- medium loss
Red -- high loss
Black -- no signal measured
Tx

Data Examples

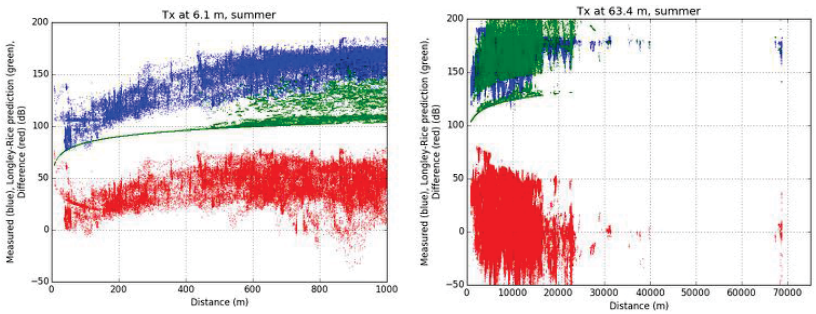

Probability Distribution Function (all measurements)

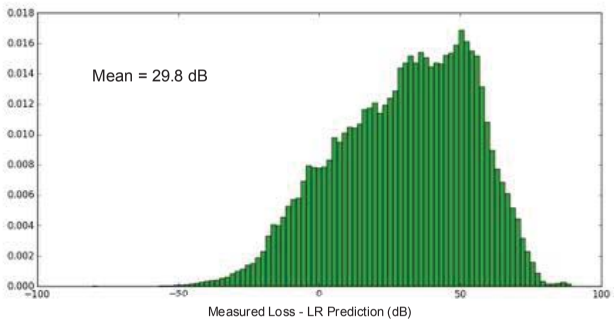

Cumulative Distribution Function (all measurements)

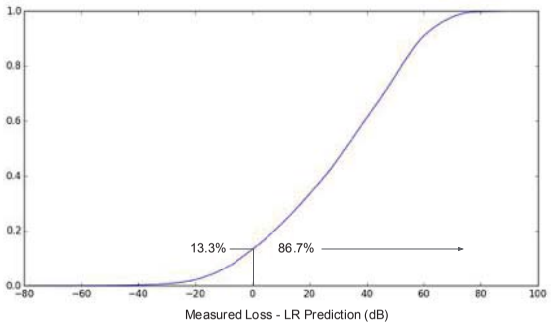

Data Comparison Methods

- Effects of height, location, weather, etc., are determined by comparing data obtained under different circumstances
- Two methods are used to compare data:
  - Bulk comparison
    - Given the statistically large number of data points, we can compare the average of all data obtained under different circumstances across all locations
  - Grid comparison
    - The data for particular circumstances are placed on a geographic grid, and data points within corresponding pixels of different grids are compared. This technique assures comparison of data points obtained at the same location

Google

Relative Height Gain (by Grid Comparison)

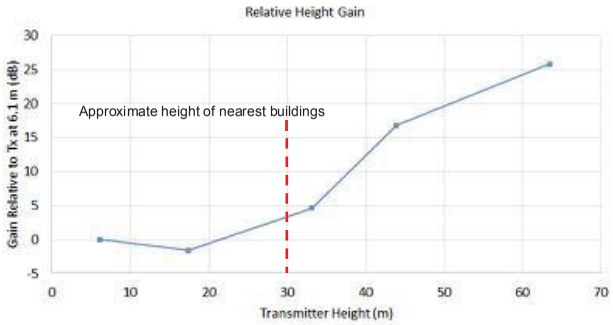

Google

Longley-Rice Reliability vs Distance & Tx Height

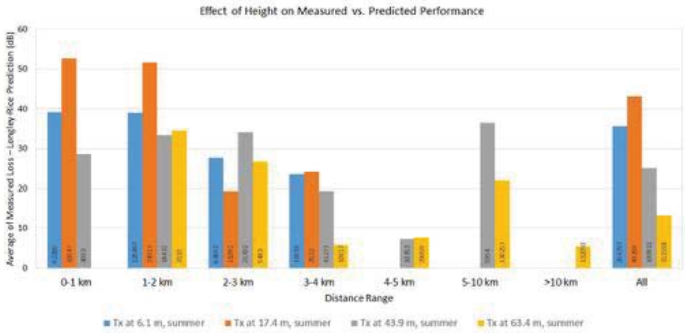

Google

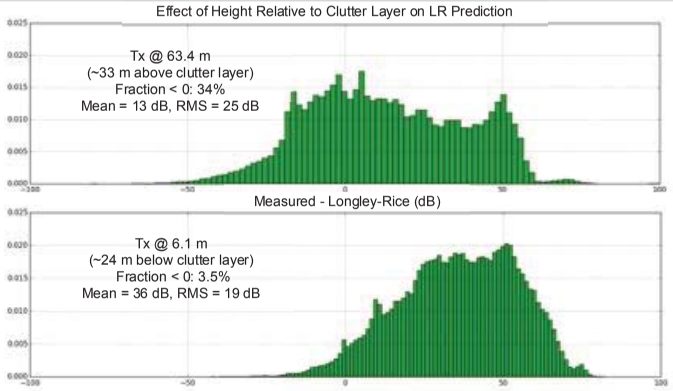

Google

Summer vs. Winter; Outdoor vs. Indoor; Precipitation

- Summer vs Winter
  - Based on 17,364 co-located grid points for tx at 6.1 m, the difference between summer and winter (leaves on vs. leaves off) is 6.0 dB (higher loss in summer)
- Outdoor vs. Indoor
  - Difference is 15.1 dB based on 2248 co-located grid points
- Precipitation
  - Outdoor @ 63.4 m, moderate-to-heavy rain: insignificant difference 0.9 dB (higher loss when dry) (270 co-located grid points)
  - Indoor @ 6.1m, heavy rain: difference 9.6 dB (higher loss when raining) (440 co-located grid points)
  - Outdoor @ 6.1 m, moderate snow: no discernible difference (<0.1 dB) (4066 co-located grid points)

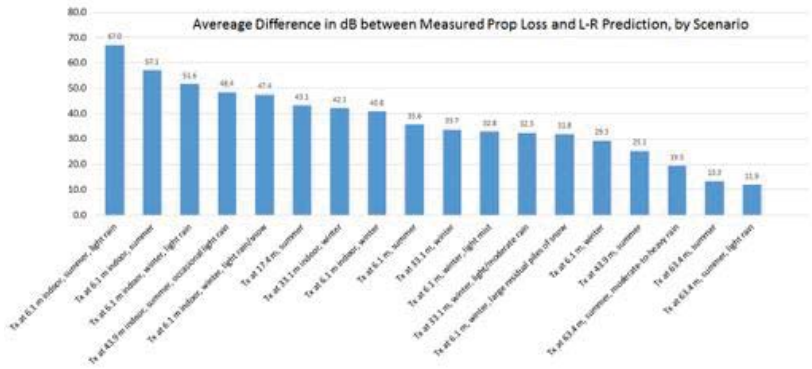

Example Stationary Measurements

- Rx held stationary for ~10 - 60 min to test longer-term fading statistics

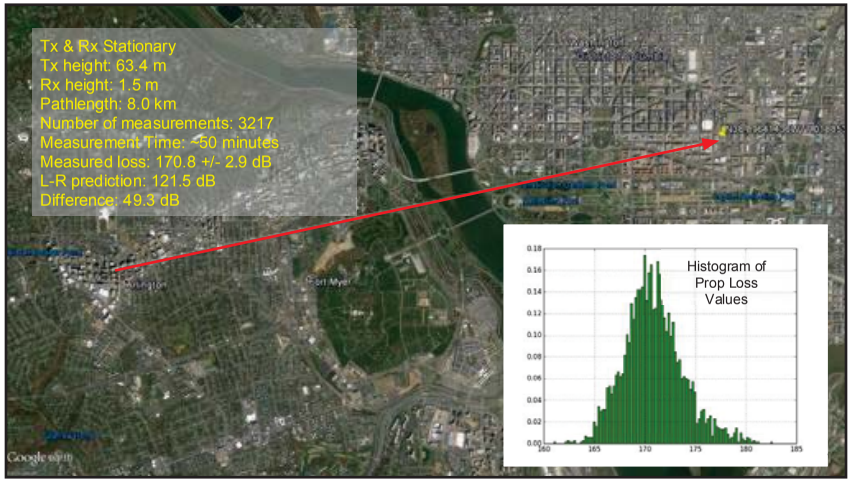

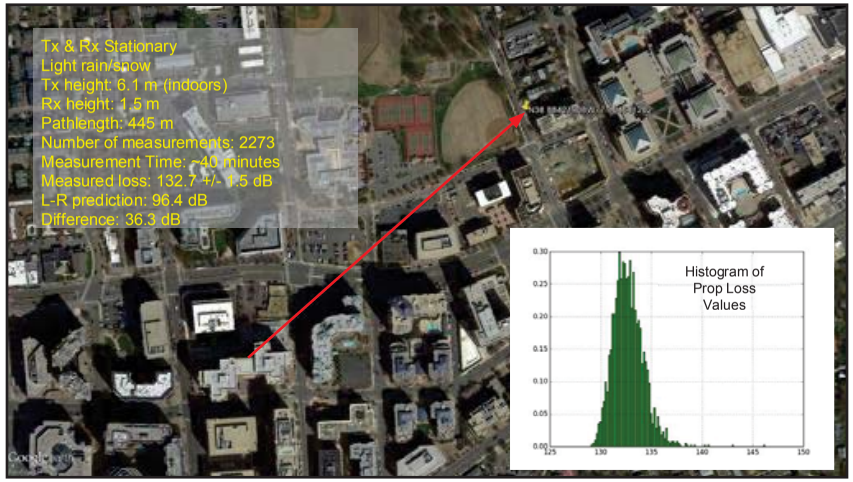

Google

Graphical Examples of Propagation Phenomena

Google

Some Tentative Take-Aways

- Measured loss is almost always greater than Longley-Rice prediction. The difference is especially pronounced within the clutter layer.
- Agreement with L-R improves with distance, but subject to significant selection bias, and requires further testing
- Agreement with L-R improves somewhat with transmitter height above ground and in relation to surrounding clutter
- Indoors accounts for about 15 dB of additional loss
- No appreciable difference due to light-to-moderate rain or snow
  - Significant difference in heavy rain for indoor tx, but needs further study
- Some propagation anomalies noted
  - Signals travel well down-river
  - Trees create significant scattering/absorption

Google

Future Work: Clutter Modeling

We are modeling the excess clutter-induced propagation loss ε over a prediction model M as:

$$PL = M + \varepsilon,$$

$$\varepsilon = aD_F + bD_B + C,$$

where PL is the total path loss, D_F is the path distance through foliage, D_B is the path distance through buildings, C is a constant, and a and b are "clutter coefficients" that account for losses due to foliage and buildings, respectively. D_F and D_B are determined through reference to latest-generation GIS databases.