1801 Pennsylvania Avenue, N.W.
4th Floor
Washington, D.C. 20006

MCI WORLDCOM

October 21, 1998

ORIGINAL

**VIA HAND DELIVERY**

EX PARTE OR LATE FILED

RECEIVED
OCT 21 1998
FEDERAL COMMUNICATIONS COMMISSION
OFFICE OF THE SECRETARY

Ms. Magalie Roman Salas
Secretary
Federal Communications Commission
1919 M Street, N.W., Room 222
Washington, D.C. 20554

**Re: Notice of Ex Parte Presentation (CC Docket Nos. 96-98; 98-79; 98-103; 98-161; CCB/CPD 97-30)**

Dear Ms. Salas:

On October 20, 1998, Jonathan Sallet, David Porter, Richard Whitt, and Alan Buzacott of MCI WorldCom, Inc. ("MCI WorldCom") met with Kathy Brown, Jane Jackson, Don Stockdale, and Tamara Preiss of the Common Carrier Bureau concerning issues raised in the above-referenced proceedings. Discussion centered around the Commission's pending DSL tariff investigations, the jurisdictional nature of traffic terminating to information service providers' points of presence within a local exchange area, and ILEC payment of reciprocal compensation. During the course of the meeting, Mr. Whitt distributed a copy of the attached ex parte letter.

An original and one copy of this letter, and the attachment, are hereby submitted to your office today, pursuant to the requirements of Section 1.1206(b)(2) of the Commission's rules, for each of the above-referenced proceedings. If you have any questions, please contact the undersigned at 202-776-1553.

Respectfully submitted,

Richard S. Whitt
Director, Federal Affairs/Counsel

cc: Kathy Brown
Jane Jackson
Don Stockdale
Tamara Preiss

Attachment

No. of Copies rec'd 0+11
List A B C D E

COPY

MCI WORLDCOM

1801 Pennsylvania Avenue, N.W.
4th Floor
Washington, D.C. 20006

RECEIVED

OCT 19 1998

FEDERAL COMMUNICATIONS COMMISSION
OFFICE OF THE SECRETARY

October 19, 1998

VIA HAND DELIVERY

Ms. Magalie Roman Salas
Secretary
Federal Communications Commission
1919 M Street, N.W., Room 222
Washington, D.C. 20554

**Re: Notice of Ex Parte Presentation (CC Docket Nos. 96-98; 98-79; 98-103; 98-161; CCB/CPD 97-30)**

Dear Ms. Salas:

On October 16, 1998, David Porter, Richard Whitt, and Alan Buzacott of MCI WorldCom, Inc. ("MCI WorldCom") met with Rich Lerner in the Competitive Pricing Division concerning issues raised in the above-referenced proceedings. Mr. Buzacott distributed a copy of the attached handout during the course of the meeting.

In MCI WorldCom's view, there may well be situations where end users located in separate states would want to subscribe to interexchange carrier ("IXC") services that incorporate incumbent local exchange carrier ("ILEC")-provided ADSL technology in the local loop. In these cases, it would be appropriate for the IXC to subscribe to such services from an ILEC interstate access tariff. Thus, assuming the proposed ILEC ADSL tariffs subject to the instant investigation satisfy all other pertinent Commission requirements, those tariffs are suitably filed in the interstate jurisdiction. However, it is expected that most applications using ADSL technology will be provided to end users -- either Internet service providers ("ISPs") or their customers. Until they have satisfied Section 271 of the Telecommunications Act of 1996 ("1996 Act"), the Regional Bell Operating Companies ("RBOCs") may only provide intraLATA services to end users. Therefore, MCI WorldCom would hope that any Commission order allowing the proposed interstate tariffs to take effect would clearly state that the ILECs -- and particularly the RBOCs -- are expected to file comparable end user ADSL tariffs at the state level as well.

The parties also discussed the jurisdictional nature of traffic terminating to ISPs. In the instant case, involving dedicated high-speed access, there should be no question -- jurisdiction is based on the locations of the end user and the ISP's point of presence ("POP").

We were surprised and appalled to learn, therefore, that the Commission, in its conduct of this routine tariff review process, may readdress the jurisdiction of dial-up, circuit-switched calls to ISPs. This issue clearly was not designated for discussion in the Designation Order, and therefore is not appropriately before the Competitive Pricing Division. Nor should the Division reach issues not pertinent or necessary to arriving at a final decision in this proceeding. Nonetheless, if the Commission decides to revisit this issue in this proceeding, MCI WorldCom strongly urges the Commission to declare that the jurisdiction of a call from an ISP's customer to the ISP is determined by the physical location of the customer and the point at which that customer is attached to the ISP's network. Because most ISPs have gone to great lengths to establish POPs within the local calling areas of most of their customers, the vast majority of calls from an ISP customer to its ISP will be jurisdictionally local calls.

In our meeting, Mr. Lerner suggested that the Commission might determine the jurisdiction of a call to an ISP based on the (often times) distant location of the information requested by the ISP customer, rather than on an end-to-end analysis of the locations of the calling and called parties. The former view is based on a fundamental misunderstanding of the configuration of typical calls to ISPs, and the regulatory classification of ISPs themselves. First, ISPs are end users and not telecommunications carriers. Regardless of the assets ISPs employ as inputs to their ISP services -- including telecommunications services -- ISPs are not providing a service subject to FCC common carrier-type regulation. Second, consistent with longstanding FCC precedent, a call from an ISP customer to an ISP platform is a complete, end-to-end telephone call. Whether or not an ISP subsequently utilizes other telecommunications services to retrieve the information requested by its customer is irrelevant to determining the jurisdictional classification of calls by its customers to the ISP.

In its discussion with Mr. Lerner, MCI WorldCom alluded briefly to some of the following points about the proper jurisdiction of telephone calls to ISPs:

**The Telecommunications Act establishes as federal policy that information services are not regulated as, but rather are merely provided via, telecommunications services**

The Telecommunications Act of 1996 acknowledges that there is a bright-line distinction between telecommunications services and information services. The term "telecommunications" means "the transmission, between or among points specified by the user, of information of the user's choosing, without change in the form or content of the information as sent and received."[1] In turn, the term "telecommunications service" refers to "the offering of telecommunications for a fee

[1] 47 U.S.C. Section 154(43).

directly to the public ...regardless of the facilities used."[2] In contrast, the term "information service" means "the offering of a capability for generating, acquiring, storing, transforming, processing, retrieving, utilizing, or making available information," all of which is done "via telecommunications."[3] Thus, information services can never be telecommunications services; instead, like countless other business enterprises, information service providers utilize telecommunications services as one regulated input into a final unregulated information service offering.

Congress also has made it clear that information services should not be subject to governmental regulation. Section 230(a)(4) of the 1996 Act includes a finding by Congress that the Internet and other interactive computer services have flourished "with a minimum of government regulation."[4] That provision adopts as the official policy of the United States that "the vibrant and competitive free market that presently exists for the Internet and other interactive computer services" must be preserved, "unfettered by Federal or State regulation."[5]

**FCC precedent demonstrates that traffic terminating to ISPs constitutes local calling**

An unbroken string of Commission precedents hold that traffic terminating to ISPs is not toll telephone or exchange access service, and therefore must be local traffic.

In its Local Interconnection Order, the FCC confirmed that, under the 1996 Act, all carriers can obtain interconnection to terminate local calls.[6] The Commission defined the term "termination" to include calls to the "called party's premises."[7] Because the ISP's point of presence constitutes the "called party's premises," termination by definition includes ISPs.

The Commission also has touched on the local nature of calls to ISPs, versus the interstate nature of ISP transmissions to the Internet. Back in 1989, the Commission reiterated the long-recognized conclusion that "ESP traffic over local business lines is classified as local traffic for separations purposes," so that "[traffic

---

[2] 47 U.S.C. Section 153(47).

[3] 47 U.S.C. Section 153(20).

[4] 47 U.S.C. Section 230(a)(4).

[5] 47 U.S.C. Section 230(b)(2).

[6] Local Interconnection Order at para. 90.

[7] Local Interconnection Order at para. 1034.

sensitive] costs associated with ESP traffic are apportioned to the intrastate jurisdiction, and are recovered through intrastate charges paid by ESPs and other purchasers of intrastate services."[8]

More recently, in the Non-Accounting Safeguards Order, the FCC observed that even though an end user might obtain access via an ISP to an information service across LATA boundaries, the service is not deemed interLATA.[9] Indeed, the RBOCs argued that they are able to provide intraLATA Internet access service where the customer connects to the ISP point of presence ("POP").[10] The Commission acknowledged that two separate transmissions are involved when an end user seeks access to the Internet. First, the end user obtains access to the ISP by using dial-up or dedicated access to the ISP's processor or platform; second, the ISP, in turn, acts as the buffer between the end user and various repositories of information content, including the Internet.[11] Similarly, in the Universal Service Order, the Commission discussed how an ISP subscriber "obtains a connection to an Internet service provider via voice grade access to the public switched network."[12] The FCC stated that "that connection is a telecommunications service and is distinguishable from the Internet service provider's service offering."[13]

The Commission also has addressed the mutually exclusive nature of reciprocal compensation and access charge arrangements. Most recently, in its report to Congress earlier this year on universal service issues, the Commission reminded Congress that access charges only apply in the long distance setting, where there are three carriers. In contrast, the FCC stated that the reciprocal compensation obligation

---

[8] Amendments of Part 69 of the Commission's Rules Relating to the Creation of Access Charge Subelements for Open Network Architecture, Notice of Proposed Rulemaking, 4 FCC Rcd 3983, 3987-88 (1989).

[9] Implementation of the Non-Accounting Safeguards of Sections 271 and 272 of the Communications Act of 1934, as amended, CC Docket No. 96-149, First Report and Order and Further Notice of Proposed Rulemaking, 11 FCC Rcd 21905 (1996) ("Non-Accounting Safeguards Order") at para. 119.

[10] Non-Accounting Safeguards Order at para. 126. Of course, if the Commission does determine that traffic terminating to ISPs is interstate, the RBOCs have been flagrantly violating Section 271 of the 1996 Act from day one.

[11] Non-Accounting Safeguards Order at para. 127 n.291.

[12] Federal-State Joint Board on Universal Service, CC Docket No. 96-45, Report and Order, 12 FCC Rcd 8776 (1997) ("Universal Service Order") at para. 789.

[13] Id.

applies only where there are two carriers, in the local exchange setting.[14] There is no doubt under law that ISPs are merely end users, not carriers, and that the ILEC and the CLEC are the only two carriers involved in terminating traffic to ISPs. Thus, pursuant to the FCC's own April 1998 analysis, reciprocal compensation, and not interstate access charges, must apply to such traffic.

The FCC further informed Congress that ISPs purchase thousands of local business lines in order to provide connectivity to their users; those ISPs pay state tariffed rates, subscriber line charges, and presubscribed interexchange carrier charges.[15] Of course, all of those charges apply to local lines. The Commission also found that "at least 87% of the U.S. population has access to a commercial Internet service provider through **a local call,**" and "three-quarters of Americans live in **local calling areas** with at least three Internet service provider points of presence."[16] The Commission's words speak for themselves.

Some ILECs apparently believe that, because ISPs are engaged in interstate commerce, ISP traffic must be jurisdictionally interstate. However, there simply is no connection between these two classifications. The Commission declared enhanced service providers ("ESPs") to be engaged in interstate commerce in 1982,[17] a decision later upheld by the D.C. Circuit.[18] The FCC's Computer II decision enabled it to foreclose state regulation of ESPs. At that same time, the Commission declared enhanced service providers to be end users, not carriers.[19] These seminal decisions were the governing regulatory structure of the industry until 1996, when Congress embraced them in the Telecommunications Act of 1996. Now, it is the "law of the land" that ISPs (of which ESPs are a subset) are not communications common carriers. Rather, they remain end users which incorporate telecommunication services into the provision of separate information services. Like any other end user, they may utilize any combination of telecommunication services

---

[14] Federal-State Joint Board on Universal Service, CC Docket No. 96-45, Report to Congress, issued April 10, 1998 ("Universal Service Report to Congress") at para. 33.

[15] Universal Service Report to Congress at para. 97.

[16] Universal Service Report to Congress at para. 103 (emphasis added).

[17] Amendment of Section 64.702 of the Commission's Rules and Regulations (Computer II), 77 FCC 2d 384 (1980).

[18] Computer and Communications Industry Association vs. FCC, 693 F.2d 198 (D.C. Cir. 1982), cert. denied, 461 U.S. 938 (1983).

[19] 47 C.F.R. Section 64.702(a).

to conduct their own business, including business as a non-common carrier provider of information services.

Factual precedent shows that traffic terminating to ISPs constitutes local calling

An additional point is that the ILECs themselves always have considered traffic terminating to ISPs to be local. Indeed, the ILECs (1) treat their own end user customers' calls to their ISP customers as local calls, (2) tariff those calls as local, (3) bill those calls as local, (4) declare those calls to be local,[20] and (5) report those calls as local. To MCI WorldCom's knowledge, no ILEC has ever charged long distance fees to its own end user customers seeking to access one of its own ISPs. To the contrary, the ILECs have routinely billed MCI WorldCom reciprocal compensation for calls terminating to the ILECs' ISP customers.

Indeed, under the current interLATA restriction contained in Section 271 of the 1996 Act, the RBOCs would be prohibited from carrying such traffic on an interstate basis.[21] As a separate matter, MCI WorldCom already has pointed out to the Commission that, under the guise of providing an access service, the RBOCs appear to be providing interLATA information services in violation of the 1996 Act. Pending before the Commission since July 1996 is a petition for reconsideration filed by MFS challenging the Common Carrier Bureau's grant of a CEI plan for Bell Atlantic's Internet access service.[22] MFS explained that Bell Atlantic's CEI plan violates Sections 271 and 272 of the 1996 Act by offering bundled, in-region interLATA information services to end users without receiving Section 271 authorization.[23] If

---

[20] Earlier this year, SBC notified the Commission that, effective calendar year 1997, it had begun unilaterally to classify and report traffic terminating to ISPs as interstate for separations purposes. See Letter from B. Jeannie Fry, Director, Federal Affairs, SBC, to Ken Moran, Chief, Accounting and Audits Division, FCC, dated January 20, 1998, at 1. Obviously, in announcing such a change in jurisdictional classification, SBC was obliged to acknowledge that under its longstanding practice prior to 1997, "ISP traffic was originally identified as intrastate (local) for separations and reporting purposes, instead of interstate...." Id. at 2.

[21] 47 U.S.C. Section 271.

[22] Petition for Reconsideration of MFS Communications Company, Inc. CCBPol 96-09, filed July 3, 1996; see Bell Atlantic Telephone Companies' Offer of Comparably Efficient Interconnection to Providers of Internet Access Services, Order, 11 FCC Rcd 6919 (CCB June 6, 1996).

[23] The FCC's Non-Accounting Safeguards Order subsequently validated MFS' reading of those provisions as prohibiting the RBOCs from providing interLATA Internet access service on a bundled basis, but indicated that the lawfulness of Bell Atlantic's

the Commission ultimately enforces the Act by granting MFS' petition, Bell Atlantic and any other offending RBOCs will be compelled to cease their unlawful activities.

The ILECs' own historic treatment of ISP traffic is not surprising because it accurately reflects its local nature. ISPs use a wide variety of telecommunication services in their provision of information services. In particular, ISPs subscribe to local services so that their customers, who also subscribe to local services, may make a local call to the ISP. ISPs also use other dedicated or switched services to connect their various local points of presence to each other and to other ISPs. Some ISPs provide toll-free access using 800 services rather than local services. Further, any ISP could use the same access services as do common carriers -- if they so choose.[24]

A dial-up connection to the Internet involves two separate transmissions. First, the end user customer dials a local telephone number (such as a seven-digit number) to connect to the ISP platform; this telephone call constitutes local telecommunications. Second, the ISP responds to the end user's request for access to information content, including such content from the Internet or elsewhere (such as a locally-based ISP, database, or cache); this second transmission is launched by the ISP, likely over a jurisdictional private line service, to retrieve the information requested by its customers.

The initial call from the end user customer to the ISP is no different from a call to a local insurance company, newspaper sports desk, or airlines reservation counter, all of which can (and do) employ interstate telecommunications services to serve their clientele. The Commission has acknowledged this similarity as well, stating in the Access Charge Reform Order that, given "the evolution in ISP technologies and markets" since the early 1980s, and the existence of "Commercial Internet access," "many of the characteristics of ISP traffic (such as large numbers of incoming calls to Internet service providers) may be shared by other classes of business customers."[25]

Thus, from pertinent legal, regulatory, policy, and factual perspectives, traffic terminating to ISPs is local in nature. Should the Commission even reach in this proceeding the issue of the proper jurisdiction of dial-up, circuit-switched telephone calls to ISPs (which would be contrary to the terms of the Designation Order), it should reiterate that ISPs are end users, and that telephone calls to ISPs from other end users are classified based on the geographic locations of the calling end user and

---

Internet access service was better considered in Bell Atlantic's pending CEI proceeding. Non-Accounting Safeguards Order at para. 127.

[24] Of course, the Commission only has jurisdiction over interstate common carriers, not intrastate end users.

[25] Access Charge Reform Order at para. 345.

the called ISP's POP.

An original and one copy of this letter, and the attachment, are hereby submitted to your office today, pursuant to the requirements of Section 1.1206(b)(2) of the Commission's rules, for each of the above-referenced proceedings. If you have any questions, please contact the undersigned at 202-776-1553.

Respectfully submitted,

Richard S. Whitt
Director, Federal Affairs/Counsel

cc: Kathy Brown
Jane Jackson
Rich Lerner
John Nakahata
Tom Power
Jim Casserly
Kevin Martin
Kyle Dixon
Paul Gallant

Attachment

# ADSL Tariffs

MCI WorldCom

October 16, 1998

# ADSL Tariffs

- ADSL services are properly tariffed at <u>both</u> the federal and state levels
- The Commission need not, and should not, address Internet-related issues in this proceeding

# xDSL Technology Could Be Used For Interstate <u>or</u> Intrastate Services

- xDSL is just a transmission technology; it has many uses that are not Internet-related
- Some of these uses potential uses could be interstate, while others could be intrastate
- Because GTE's ADSL service can be a jurisdictionally interstate service, it should be tariffed at the federal level
- Should also be tariffed at the state level
- HDSL is tariffed at both the federal and state levels

# ADSL Has Both Interstate Applications . . .

**(e.g., as part of an interstate packet-switched telecommunications service connecting a company's head office and branch office locations)**

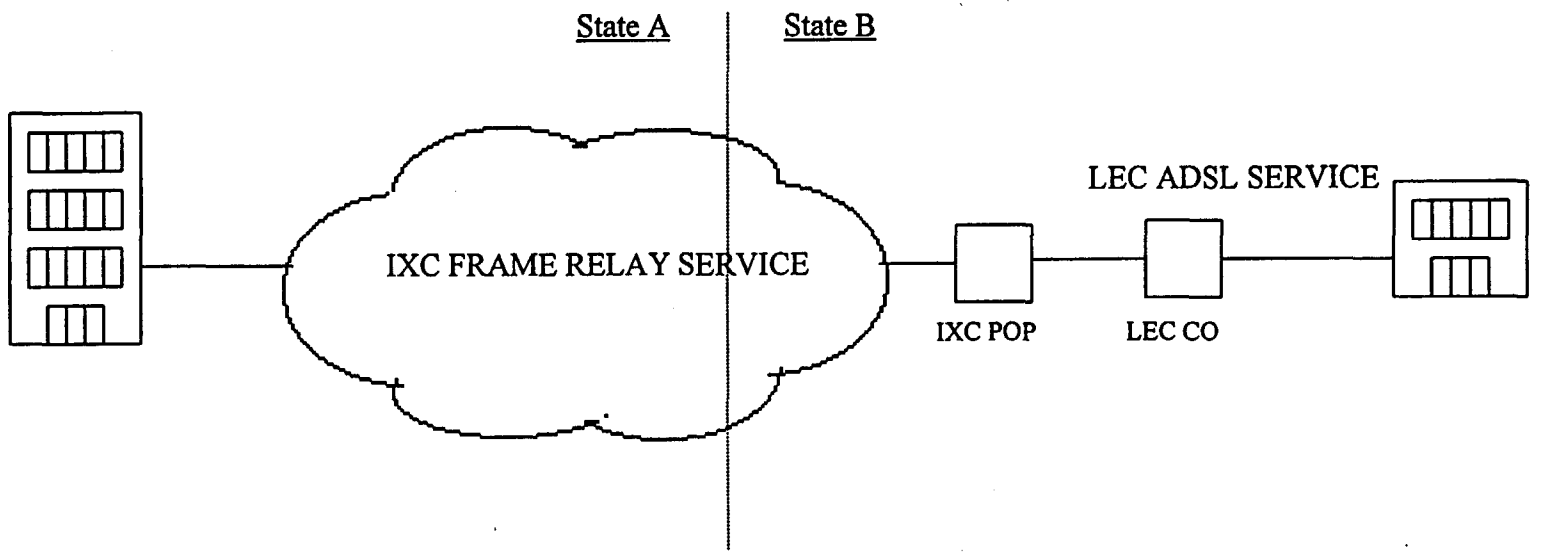


# . . . and Intrastate Applications

**(e.g., as part of a "work at home" service)**

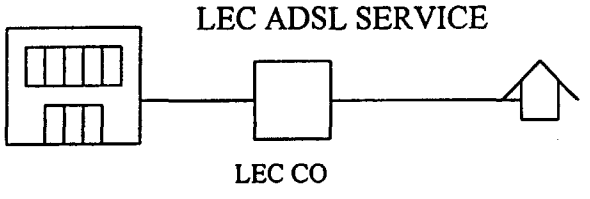

## The Commission Need Not, and Should Not, Address Internet-related Issues

- A tariff proceeding is not the right place to address complex Internet-related jurisdictional issues