RECEIVED

DEC 23 1998

FCC MAIL ROOM

Holtzman Inc.
6423 Fairways Dr.
Longmont, CO 80503
ph: 303-444-6140
fax: 303-444-7698

December 22, 1998

Federal Communications Commission
Mass Media Bureau, Audio Services Division
1919 M Street, N.W. RM222
Washington D.C. 20054

Re: Comments on RM-9395, a petition for rule making for a Digital Audio Broadcast System

Dear Sir or Madam:

Holtzman Inc. is a Colorado corporation based in Longmont, CO.

Holtzman would like to introduce a novel modulation technique for consideration by the FCC for the proposed digital audio service. Although this proposal is not by any means a complete broadcast system, it is a flexible and basic modulation technique that can be used to advantage by a modification to other systems, such as the system proposed by USADR. A patent is pending on this technology, and this is the first public disclosure of the idea. The idea is presented in Appendix A, which is a technical paper describing the basic technique without a specific reference to the application of digital audio broadcasting.

One major challenge in providing a successful digital audio service is supplying a continuous low bit error rate data stream in the presence of dynamic multipath distortion in the signal path. One of the major markets for audio services in the FM radio band is transmissions to moving vehicles which experience very dynamic multipath distortion.

The new modulation technique is based on the transmission and reception of two blocks of data that contain the same information, but with different encoding. The two blocks are transmitted adjacent to each other in time, so that approximately the same linear distortion will be applied to both data blocks. At the receive site the two blocks of data are captured and processed with each other to cancel the distortion while adding signal energy. This technique works with orthogonal frequency division multiplexing (OFDM) as the first block and reciprocal OFDM as the second block.

This modulation method can be used at baseband or with any linear modulation technique, such as vestigial sideband, double sideband, or single sideband. This technique may also provide benefits to other challenging digital transmission problems such as moving data through a city on microwave carriers where no line-of-sight can be established, and providing underwater digital communications in the ocean where wave motion causes dynamic multipath distortion.

I request that you carefully consider this new modulation technology, since any decision made by the FCC on digital audio services will stand for a long period of time.

Regards,

Thomas H Williams

Thomas H. Williams
President

No. of Copies rec'd 1 Original
List A B C D E

APPENDIX 1

A Digital Transmission System with Very High Immunity to Dynamic Multipath Distortion

by: Thomas H. Williams

© Holtzman Inc.

Abstract

This paper describes a novel digital signal transmission system that is very tolerant to time-variable linear distortions such as dynamic multipath. A burst transmission is comprised of two consecutive data blocks with identical data that have been processed differently. The two data blocks are transmitted adjacent to each other in time so that the time-variable transmission channel will apply approximately the same linear distortion to each block. At the receive site, the two blocks are captured and processed together to cancel the effects of the linear distortion, while adding the signal energy from each block.

Background

Signal paths that are contaminated with linear distortions, such as echoes or multipath, present a challenge to the transmission of high-speed digital signals over those signal paths by conventional single frequency carriers, such as quadrature amplitude modulation (QAM) or vestigial sideband (VSB). If the echo is mild, it will increase the bit error rate (BER) in the presence of random noise. If the echo is severe, the error rate may be so high that the data is useless even with no random noise added to the transmission. There are a number of methods of eliminating or reducing the effects of the linear distortions. One method is the use of an adaptive equalizer, while another is the use of a transmission system that is naturally tolerant to linear distortion, such as code division multiple access (CDMA) or frequency shift keying (FSK).

If a normal transmitted signal $s_N(t)$ is sent over a channel with an echo having an amplitude of 'a' and delay of τ, the received signal $u_N(t)$ may be represented in the time domain as:

$$u_N(t) = s_N(t) + as_N(t-\tau) \tag{1}$$

If this signal is transformed into the frequency domain, the result will be:

$$U_N(f) = S_N(f)(1 + ae^{-j2\Pi f\tau}) \tag{2}$$

The magnitude frequency response of a channel with a single echo may be observed to have ripples with a period equal to the reciprocal of the delay τ associated with the echo.

This equation can be simplified to:

$$U_N(f) = S_N(f) \cdot H(f) \tag{3}$$

where H(f) is the complex frequency response associated with the channel. If the channel is perfect, H(f) will be 1.0 at all frequencies at an angle of 0 degrees.

One common technique to eliminate the effect of the echo is to use an adaptive equalizer to cancel the multipath distortion. The equalizers are filters that are made up of unit delay elements (z^{-1}), stored coefficients ($b_0, b_1 \ldots b_N$), multipliers (circles with x's), and a summer (Σ) as illustrated in

Figure 1. The number of multiplier elements utilized is called the number of taps. The coefficient values must be correctly programmed for the equalizer to work. The filters may be configured as finite impulse response filters (FIR) as shown, or as infinite impulse response filters (IIR), or both. This echo cancellation method may be augmented by using a training signal embedded in the transmission to assist in the programming of the adaptive equalizer's coefficients. Alternately, a blind equalizer may be used to set the coefficient's values. Considerable effort has been expended to quickly find the most accurate set of coefficients in the presence of random noise. Typically the presence of noise, the need for speed, and the lack of a training signal all work against the accurate setting of coefficients. The equalizer may be a baseband design, as illustrated, or may be an I-Q (inphase - quadrature) complex design for equalizing RF channels. An I-Q equalizer utilizes 4 FIR filters for I-I, Q-Q, Q-I and I-Q equalization.

Systems that are naturally tolerant to echoes, such as wide band CDMA, have a disadvantage that they are not typically bandwidth efficient. That is, the number of bits per hertz of bandwidth is low.

The Invention

This new data transmission system is based on the transmission of two consecutive blocks of data. The first data block is called a normal, or N, data block and another is called the reciprocal, or R, data block. The two blocks contain the same data, but the second R data block is the reciprocal in the frequency domain of the first N block. If the characteristics of the echo do not change significantly between the transmission times of the first and the second blocks, the two blocks can be processed together to recover the originally transmitted data without the effect of echoes or other linear distortion. Furthermore, the energy from the two blocks of data adds on a voltage basis, while the random noise energy adds on a power basis.

Sending random data over a signal path contaminated with a rapidly changing echo may be viewed as an algebra problem with two unknowns: the transmitted data and the characteristics of the signal path when the data was transmitted. To solve a problem with two unknowns, two equations are required.

The following discussion assumes the use of sampled data. That is, an analog-to-digital converter (A-D) is used to sample the data in uniform time samples. In addition to the data being in discrete time form, the data are also formed into blocks with a finite number of samples. The use of the discrete fast Fourier transform (DFT) and the inverse discrete fast Fourier transform (IFFT) allow the data to be transformed between the time and frequency domains. (The FFT converts time domain signals into the frequency domain. The IFFT converts the frequency domain signals back into the time domain.)

A reciprocal data block $S_R(f)$ may be created from a normal data block $S_N(f)$ by inverting each frequency coefficient comprising the normal data block. Inversion is done by using a complex division on a term-by-term basis into 1.0 :

$$S_R(f) = \frac{1}{S_N(f)} \tag{4}$$

If the reciprocal data block is also transmitted through the signal path, a received R data block $U_R(f)$ will be:

©1998 Holtzman Inc.

$$U_R(f) = \frac{1}{S_N(f)} \cdot H(f) \tag{5}$$

$U_R(f)$ will also be distorted by a multiplication with the same complex frequency response H(f) that affected $U_N(f)$.

If the received N data block $U_N(f)$ and the received R data block $U_R(f)$ are captured and processed with each other, linear distortion cancellation can be accomplished.

If $U_R(f)$ is inverted and multiplied by $U_N(f)$, the result will be:

$$U_N(f) \cdot \frac{1}{U_R(f)} = [S_N(f) \cdot H(f)] \cdot \left[\frac{1}{\frac{1}{S_N(f)} \cdot H(f)} \right] \tag{6}$$

$$= [S_N(f) \cdot H(f)] \cdot \left[S_N(f) \cdot \frac{1}{H(f)} \right] = S_N{}^2(f) \tag{7}$$

The original undistorted N data block can be found from:

$$S_N(f) = \sqrt{S_N{}^2(f)} \tag{8}$$

If a block of data, such as a conventional random quadrature phase shift keying (QPSK), is captured and transformed into the frequency domain with a fast Fourier transform, it will likely be observed that the coefficients at some frequencies will be very small. When the reciprocal is taken on these coefficients, the magnitude of the quotient will be very large at those same frequencies. This unfortunate development creates an impractical signal for transmission through a channel with limited dynamic range. A signal that can have uniform or limited amplitude at all frequencies is orthogonal frequency division multiplexing (OFDM). A short primer on OFDM is presented so that its desirable characteristics for the new invention can be evaluated.

OFDM Primer

Although OFDM was invented in the late 60's, it has been made a practical transmission method with the coming of the digital signal processor (DSP) which can perform a discrete FFT operation very quickly. The OFDM signal may be transmitted as a baseband signal through a baseband channel such as telephone lines. Likewise the OFDM signal may be modulated onto a radio frequency (RF) carrier using single, double, or vestigial sideband modulation for transmission over a RF or microwave channel.

OFDM is a block transmission method that is in wide use for a variety of services, such as digital television and audio broadcasting in Europe, coaxial cable telephony systems, and high speed telephone modems. A transmitted data block is made up of many harmonic carriers (HCs) at different frequencies that can be accurately distinguished from each other at the receive site because the HCs are orthogonal to each other. Orthogonality is achieved because the individual HCs (which are cosine waves) comprising the composite signal are integer multiples of a

©1998 Holtzman Inc.

fundamental frequency. For example, if E(t) is an OFDM transmission with only four HCs, it may be represented as:

$$E(t) = A_1 \cdot \cos(\omega t + \phi_1) + A_2 \cdot \cos(2\omega t + \phi_2) + A_3 \cdot \cos(3\omega t + \phi_3) + A_4 \cdot \cos(4\omega t + \phi_4) \quad (9)$$

where n is the HC number. The magnitudes A_n in this example may take on values such as 1.33 or 0.75 and the phase may take on values such as 45, 135, -45, or -135 degrees. The magnitude and phase angle comprise the coefficient of a HC. In practice, hundreds or even thousands of individual HCs make up an OFDM transmission.

Figure 2 is a time domain plot of a 4-HC waveform with each of the individual HCs plotted, as well as the sum of the 4 individual HCs. This waveform comprised of 4 summed HCs is referred to as a N data block.

Figure 2 has another feature: a guard interval has been formed by copying a number of microseconds from the end of the transmission block and pasting it onto the beginning. If the time duration of the guard interval is slightly longer than the duration of the longest echo that afflicts the channel, the echo can be completely canceled in a noise-free channel. With conventional OFDM, an equalizer is still needed to cancel an echo, but it needs only to perform a single complex multiplication on each frequency term to correct the effect of the linear distortion.

Figure 3 is a frequency domain plot showing the 4 HCs of Fig. 2 as 4 vertical spectral lines. The HCs magnitudes can be seen, and the HCs phases are printed above the HCs spectral lines.

De-ghosting with Two Data Blocks

Figure 4 features a reciprocal (R) data block to the OFDM transmission illustrated in Figure 2. Each HC comprising the reciprocal sum signal is the reciprocal of the HC at the same frequency in Fig. 3. Remember that the reciprocal of a complex number is computed by dividing the magnitude component into 1.0 and changing the sign on the phase angle component. Note that if the magnitude was larger in Figure 2 for a given HC, it is smaller in Figure 4. Likewise, if the phase angle of a HC is positive in Figure 2, it is negative in Figure 4, and vice-versa. Figure 5 is a frequency response plot of the reciprocal data block.

If both a N block and a R block have been captured, contain the same data at each frequency, and are linearly distorted by the same echo, the echo may be removed by:

1. Inverting the coefficients of the HCs comprising the R data block on a frequency by frequency basis
2. Multiplying each frequency HC coefficient in the N data block by the same-frequency HC coefficient in the R data block
3. Taking the square root of the result

The resulting received data block with the linear distortion removed is referred to as a N/R data block.

An example:

Refer to Figure 6 for an illustration of the vector addition and multiplication process.

©1998 Holtzman Inc.

Assume a N HC at some frequency is transmitted with a magnitude of 1.33 at an angle of +45 degrees.

$$S_N(t) = 1.33\cos(\omega t + 45)$$

Therefore, the R HC at that same frequency will have a magnitude of 0.752 at an angle of -45 degrees.

$$S_R(t) = 0.7518\cos(\omega t - 45)$$

Assume an echo with amplitude 0.5 at an angle of 115 degrees identically contaminates both the N and R HC.

$$H = 0.5@115\text{deg.}$$

After a gain adjustment, the received N HC will be the vector sum of the $S_N(t)$ and its echo (labeled as N-ECHO) which is the product of $S_N(t)$ and H (which is 1.33 times 0.5 = .665 at an angle of 45+115=160 deg. Therefore the received N HC coefficient (labeled as N-SUM) is:

U_N=1.2096@74.88 deg.

The received R HC will be the vector sum of the $S_R(t)$ and its echo (labeled as R-ECHO) which is the product of $S_R(t)$ and H (which is 0.7518 times 0.5 = 0.3759 at an angle of -45+115=70 deg.). Therefore, the received R HC coefficient (labeled as R-SUM) is:

U_R=0.6837 @-15.12 deg.

The received R HC coefficient multiplied by the reciprocal of the received N HC coefficient is 1.769 at an angle of 90 degrees (74.9 +15.1).

$$U_N(t) \cdot \frac{1}{U_R(t)} = S_N(t)^2 = 1.769@90\text{deg.}$$

The originally transmitted HC's coefficient was therefore 1.33 (square root of 1.769) at 45 degrees (half of 90), which is the correct answer.

$$S_N(t) = 1.33@45\text{deg.}$$

The Other Method

An alternate way to receive an undistorted N data block is to transmit a square root N data block and a square root R data block. In essence, a square root N data block is created by taking the square root of each HCs coefficient in the N data block at the transmitter side. Likewise, a square root R data block is created by taking the reciprocal of each HCs coefficient in the square root N data block at the transmit side. After reception of both square root data blocks, the coefficients of each square root R HC is divided into the corresponding-frequency coefficient square root N HC. The square root is <u>not</u> taken on the quotient on the receive side. Recognizing that multiplying by the reciprocal is the same as division, the equation for the product of a received square root N data block and the reciprocal of a received square root R data block is:

$$U_N(f)\cdot\frac{1}{U_R(f)}=\left[\sqrt{S_N(f)}\cdot H(f)\right]\cdot\left[\frac{1}{\frac{1}{\sqrt{S_N(f)}}\cdot H(f)}\right] \tag{7}$$

which reduces to:

$$\left[\sqrt{S_N(f)}\cdot H(f)\right]\cdot\left[\frac{\sqrt{S_N(f)}}{H(f)}\right]=S_N(f) \tag{8}$$

which is the N data block without distortion. Using a square root signal has some other useful properties that simplify demodulation.

How to Find Frequency Response

The frequency response of the channel may also be determined by this transmission system by multiplying the coefficients of the received N data block and the corresponding coefficients of the R data block without first inverting the received reciprocal $U_R(f)$:

$$U_N(f)\cdot U_R(f)=\left[S_N(f)\cdot H(f)\right]\cdot\left[\frac{1}{S_N(f)}\cdot H(f)\right]=H^2(f) \tag{12}$$

Thus the complex frequency response of the channel can be found from:

$$H(f)=\sqrt{H^2(f)} \tag{13}$$

If the frequency response is transformed into the time domain with the IFFT, the channel's impulse response can be found. This ability suggests that ghost canceling reference signals, or training signals, can and should be made to transport digital data, also.

Signal Constellations

Signal constellations that work best with this technique do not have points that are close to the origin since these points will have large amplitude in the reciprocal block. Constellations with points on a circle, such as QPSK and 8-PSK are good. Star-shaped constellations are also easy to invert since they do not have points near the origin.

Transmitting two blocks of data with the same information may appear to be a waste of bandwidth, but the energy contained in each block of data is summed on a voltage basis, while the noise contaminating each block adds on a power basis. Thus the transmit power may be reduced or more bits of data may be transmitted in each symbol (HC) by using a signal constellation with more points.

Hardware Tests

The hardware illustrated in the block diagram of Figure 7 was constructed for the purposes of demonstration and model validation. The hardware consists of a transmitter, a receiver, and a signal path that can be inserted between the transmitter and receiver to create an echo. The inphase (I) and quadrature (Q) data blocks generated by this hardware contain random data which are stored in I and Q PROMs (programmable read-only memories) and clocked into a pair of digital to analog (D-A) converters. The I and Q outputs of the D-A converters are low pass filtered and applied to a complex modulator which up-converts both baseband signals to a single double sideband RF signal centered at 50 MHz. The transmitter output is applied to a ghosted signal path which was created with two unequal length pieces of cable. The ghosted signal is received and demodulated to baseband with a complex demodulator and captured on a two-channel digital signal acquisition unit (an 8-bit digital sampling oscilloscope) which samples at 10 Msamples/sec. The I channel is received on the first oscilloscope channel, and the Q channel is received on the second oscilloscope channel. The oscilloscope data is downloaded into a personal computer and processed. After the beginning of the guard intervals, 1024 time-domain voltage samples in both the N and R data blocks are selected for processing. The I channel data is used for the real numbers in the FFT and the Q channel data is used for the imaginary data in the FFT.

Figure 8 is a set of plots associated with a burst transmission without a severe echo. However, the effects of imperfect modulation, demodulation, and low-pass filtering can be observed. Figure 9 is a set of plots associated with a burst transmission contaminated with the severe echo created by the signal path illustrated in Fig. 7. In both figures 8 and 9, the top two traces are I and Q time traces obtained from the data acquisition unit. The N data block is followed without pause by the R data block. Thus, the two data blocks appear as one. The traces on the bottom rows are magnitude spectral traces showing the magnitudes of the individual HCs. The traces were found by performing a FFT on the time domain N data (first half of the waveforms on the top two rows). These two spectral plots show the effects of echoes and imperfect transmission equipment in the frequency domain. The third rows on figures 8 and 9 are comprised of constellation plots. Constellation plots display I voltage vs. Q voltage. From constellation plots the magnitude and phase of the individual HCs can be found. The first 4 I-Q plots are associated with the N and R transmissions, further subdivided by upper and lower sidebands. Each plot has about 400 points (HCs). Notice that one of the points (the fourth HC to be exact) has a line connecting it to the origin. This was done for purposes of identification. These plots are smeared, showing the effect of group delay in the low pass filters. These plots also have rotational smearing, which can be caused by an imperfect start time of the sampling period. The last two I-Q plots are the result of dividing N HC coefficients by the corresponding R HC coefficients and taking the square root of each of the quotients. These plots show the effect of de-ghosting.

Parameters Used for the Hardware / Software	Value(s)
Modulation - Symbol amplitudes	all equal (1.0)
Modulation - Symbol phases in degrees for square root at RX.	+45, +135, -45, -135
Modulation - Symbol phases in degrees for square root at TX.	+22.5, +67.5, -22.5, -67.5
Transmit frequency	50.00 MHz
Occupied bandwidth	8 MHz
Number of sample points captured on each channel (N+R blocks)	2500
Number of complex samples used in the FFT/IFFT	1024
Frequency separation between discrete HCs	9.76 kHz
Number of non-zero HCs in upper and lower sideband	400 lower and 400 upper

©1998 Holtzman Inc.

Number of bits used for transmit and receive symbols	8
Time interval per sample	100 ns.
Transmit and receive sample rate	10 MHz
Number of samples in each guard interval	128
Duration of the guard interval	12.8 μs.
Burst transmission length (N and R blocks with guard intervals)	230.4 μs.
Low pass filter corner frequency	4 MHz

Table 1 Summary of Hardware and Software Parameters

It should be noted that this hardware approach is the "traditional" two-channel method of complex modulation and demodulation. A more "modern" approach is the use of a single down-converting mixer with the IF centered at some frequency, such as 5 MHz. The single received IF signal is sampled and the samples are processed to get the I channel by multiplying the samples by $\cos(\omega t)$, where $\omega = 2\pi$ 5e6. Likewise, the same single received signal is processed to get the Q channel by multiplying the samples by $\sin(\omega t)$. This approach avoids the errors in a complex modulator/demodulator, such as I-Q gain imbalance and demodulator phase error. The "modern" approach was not taken because of a memory limitation in the oscilloscope which was used as the data acquisition unit.

Table 1 lists several parameters associated with the hardware tests. Both modulation types (square root taken at transmitter and square root taken at the receiver) were tested. The version displayed in Figs. 8 and 9 is square root taken at the transmitter.

Observations

The following observations were made about the system from experiments on the hardware:

1. The technique works well.

2. Quantizing error (noise) from the A-D and D-A conversion process can be seen in the plots, especially when the signal is received at a very low level. In particular, when the echo caused a HC's level to drop, the quantizing noise caused the resulting point to "spread" (deviate from ideal magnitude and phase positions). The effective number of bits (ENOB's) in the oscilloscope is only about 6.3. This effect can be observed in the plot labeled "FIXED-USB" in Fig 9.

3. In addition to canceling echoes on the signal path, some of the imperfections in the transmitting and receiving hardware are automatically corrected by this transmission technique.

Applications

The above described transmission method should find wide applications in environments where the multipath distortion is dynamic or otherwise unpredictable. This technique allows reliable reception of digital signals over paths where a transmitter is in motion, a receiver is in motion, an echo producing object is in motion or any combination thereof. In addition to working over RF or microwave channels, the system can be used at baseband frequencies. Data transmission is possible over telephone channels or through water where the wave motion renders the transmission path unstable.

A personal computer (PC) may be used to do the necessary digital signal processing associated with this transmission method. This avoids the cost of a dedicated digital signal processing chip.

©1998 Holtzman Inc.

Another modification of this basic idea is to transmit the reciprocal of a given HC in the same data block, but at an adjacent frequency. In other words, instead of transmitting a N data block followed by a R data block, a single data block comprised of alternating N and R HCs is transmitted. For example, the first 10 HCs in a single block transmission may be:

N1, R1, N2, R2, N3, R3, N4, R4, N5, R5 .....

where N1 is the first N HC and R1 is the first R HC, N2 is the second N HC and R2 is the second R HC etc. This modification of the basic idea can be successfully used if approximately the same echo is applied to a HC and its neighboring frequency by the signal path.

This transmission method is readily adaptable to use diversity antennas. Diversity is a technique using multiple antennae and multiple signal paths. The signal path with the best signal is commonly used. A receiver could use the best signal from either of 2 antennas on a HC-by-HC basis. Alternately, the received energy could be summed after it is phase-rotated so that the voltage added constructively (using vector addition).

This technique can be used to simplify the demodulation of conventional OFDM by transmitting reciprocal HCs for only a fraction of the total number of HCs.

Many types of data can be transmitted by this method. For example, the transmission system can carry telephone voice, audio entertainment, video entertainment, or world wide web (WWW) internet traffic, and data links, such as between computers on a network. In buildings, such as high-rise dwellings, echoes are both large and dynamic as the movement of people and objects, such as elevators and lift-trucks, cause the echoes to change.

Conclusion

This paper discussed the problem of data transmission when the signal path contains rapidly-changing echoes. A novel solution using two data blocks with the same data but different processing is described. The system can also be used to find the frequency response of a channel. A hardware test implementation of the idea is described, and test data is presented along with observations based on the data. This technique should prove to be exceedingly useful for data transmission over dynamic signal paths.

©1998 Holtzman Inc.

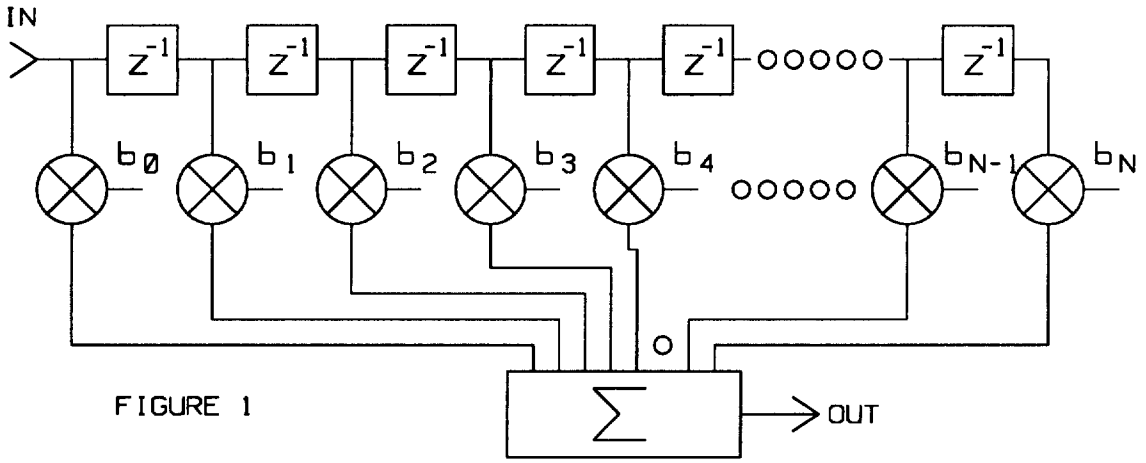

Figure 1 An Adaptive Equalizer

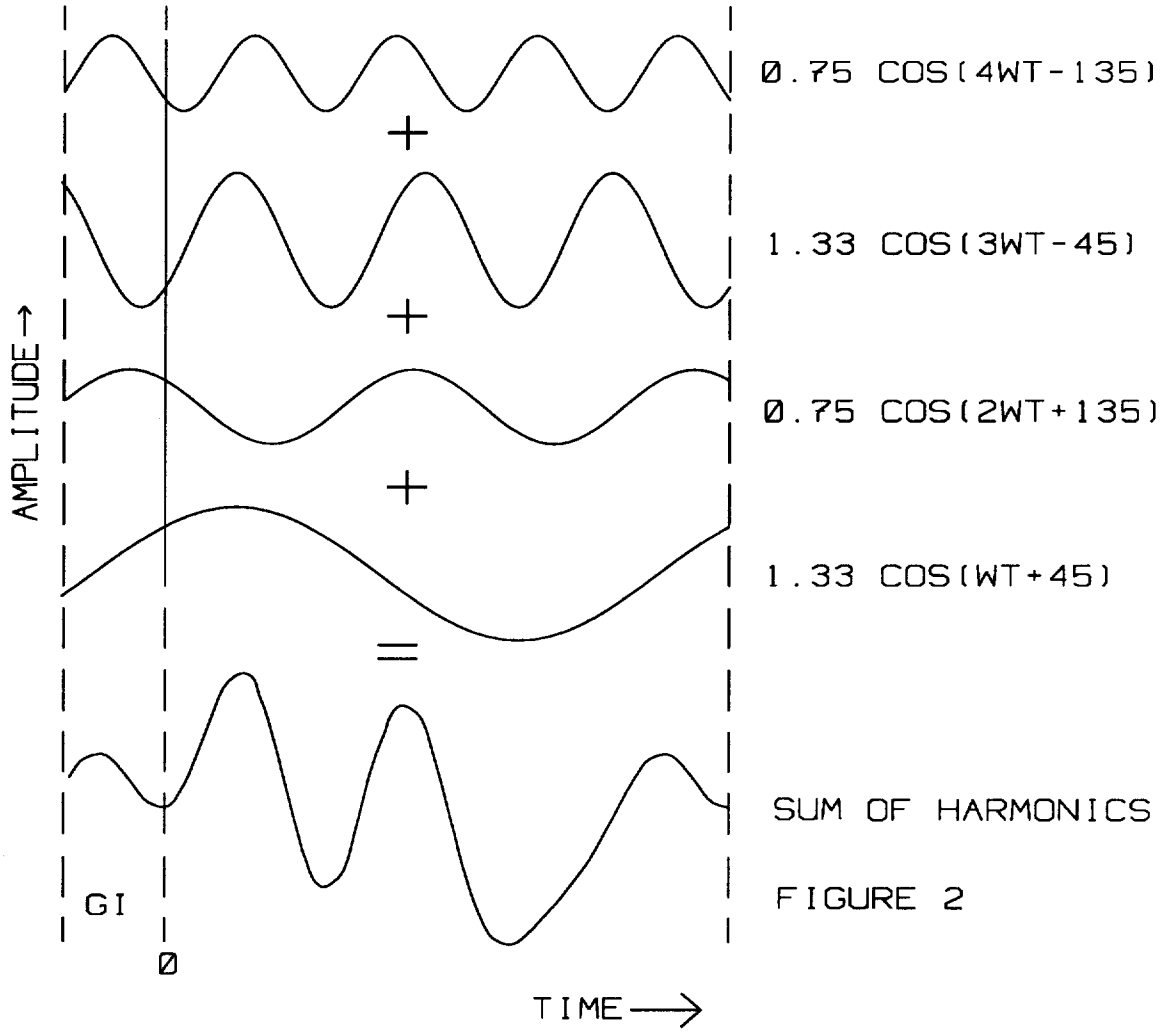

Figure 2
A Normal (N) Waveform Comprised of 4 Harmonics in Time Domain

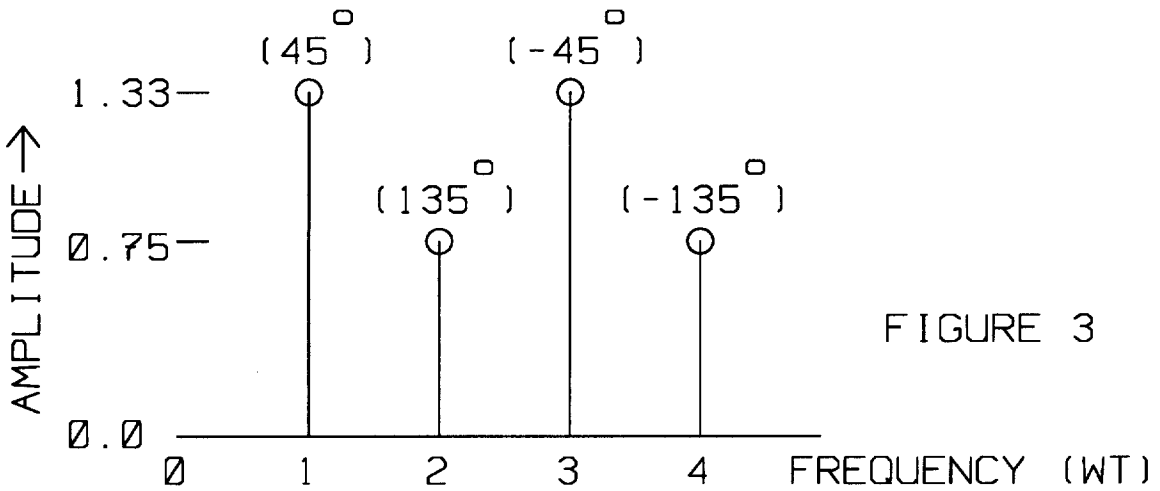

Figure 3 The Four Harmonics of Fig. 2 Viewed in the Frequency Domain

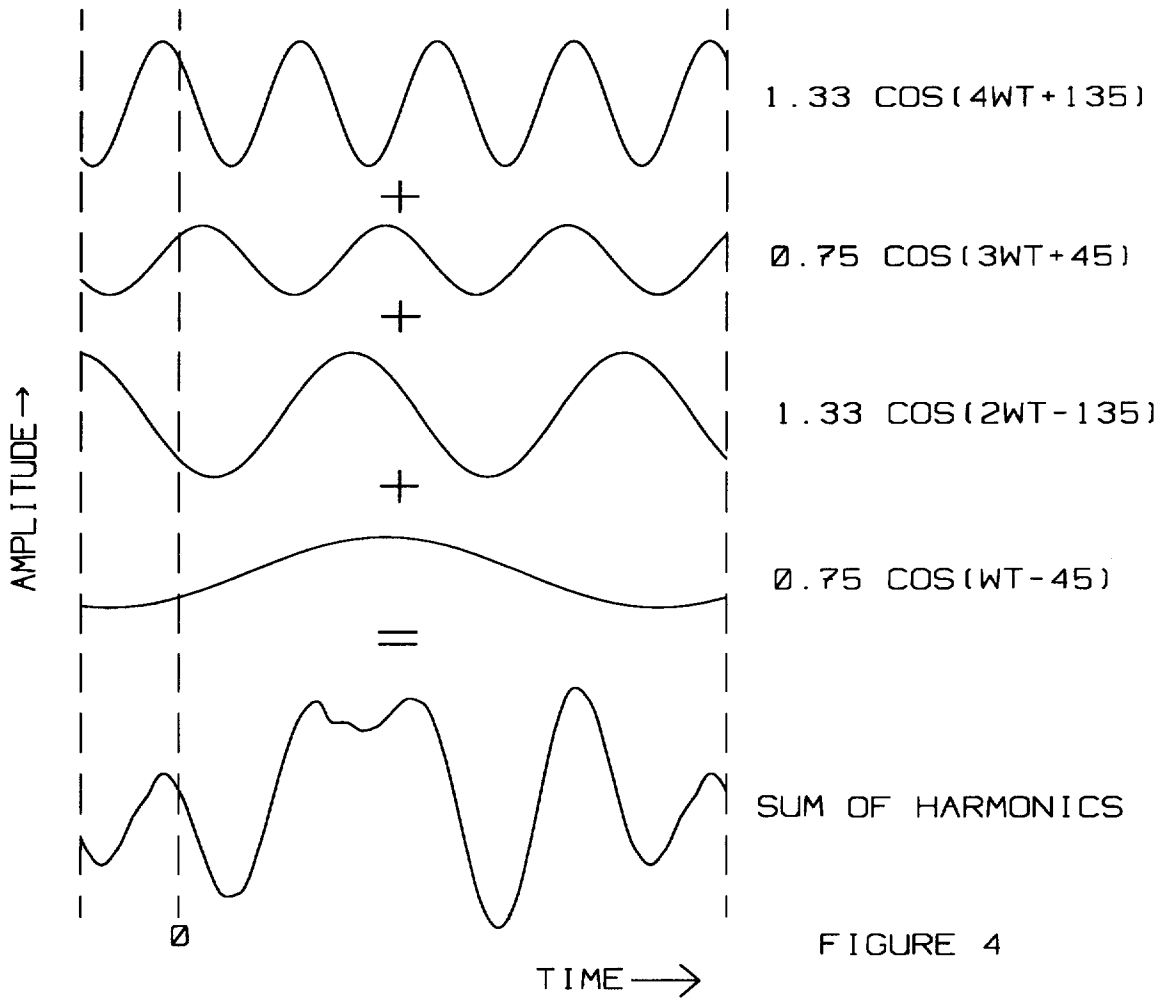

Figure 4 A Reciprocal (R) Waveform Comprised of Four Harmonics. The Harmonics are the Reciprocals of the Harmonics at the Same Frequency Illustrated in Fig. 2

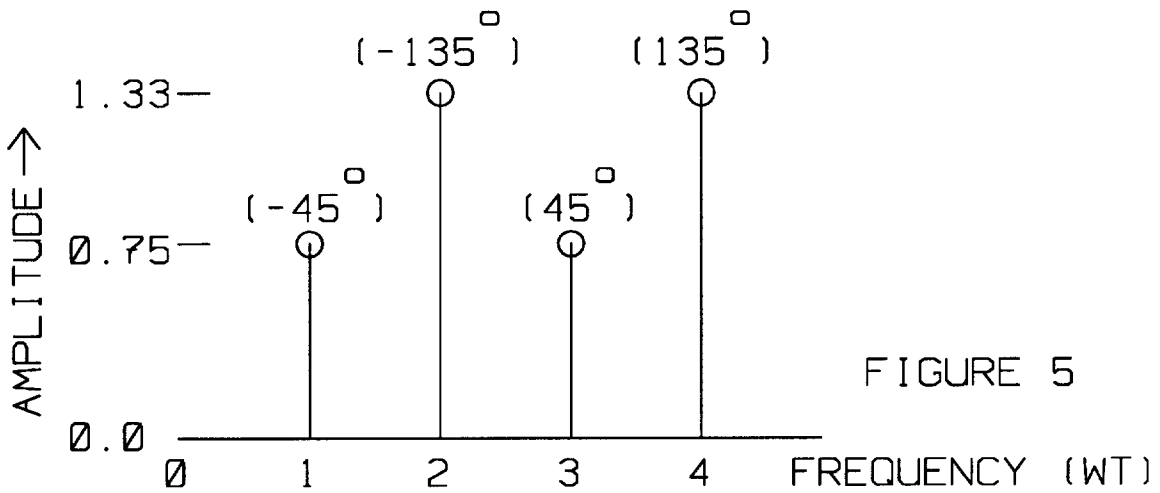

Figure 5 The Reciprocal of the Four Harmonics of Fig. 3 Viewed in the Frequency Domain. Also the Four Harmonics of Fig. 4 Viewed in the Frequency Domain

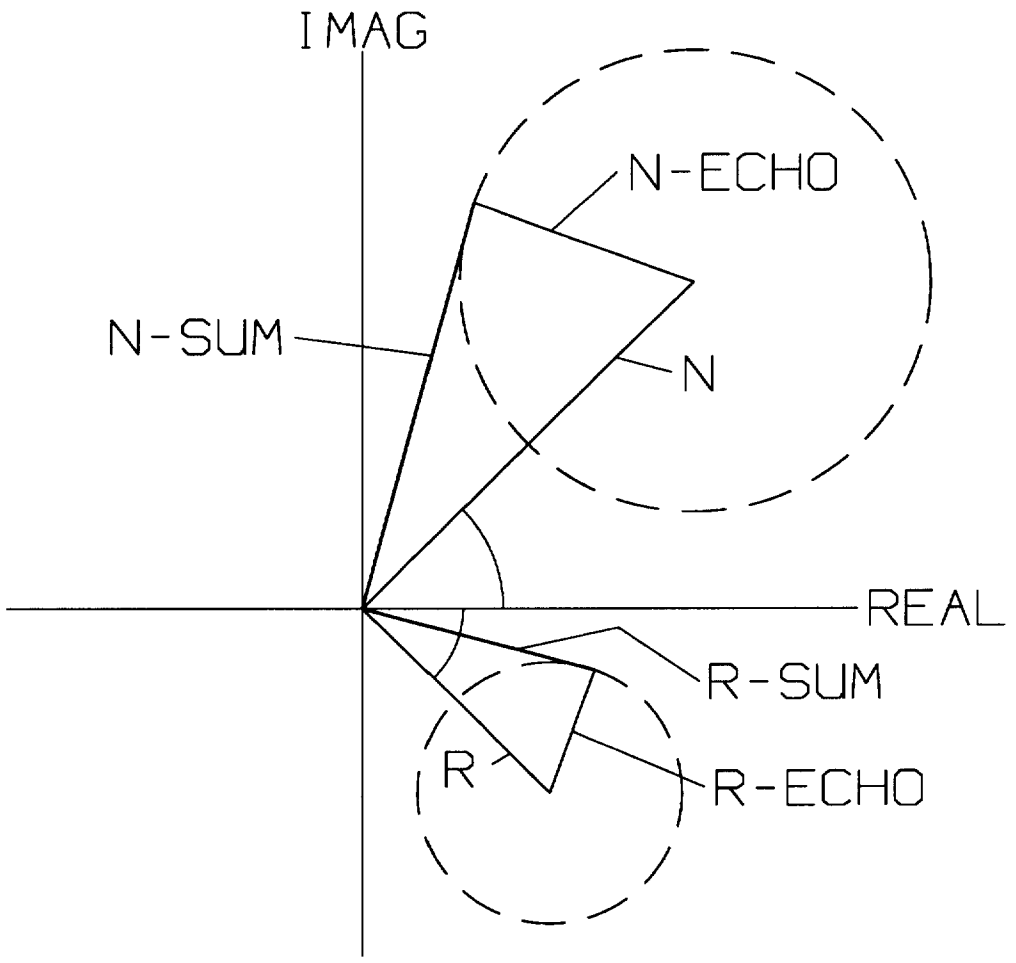

Figure 6 A Carrier, Its Reciprocal, and an Echo Distorting Both

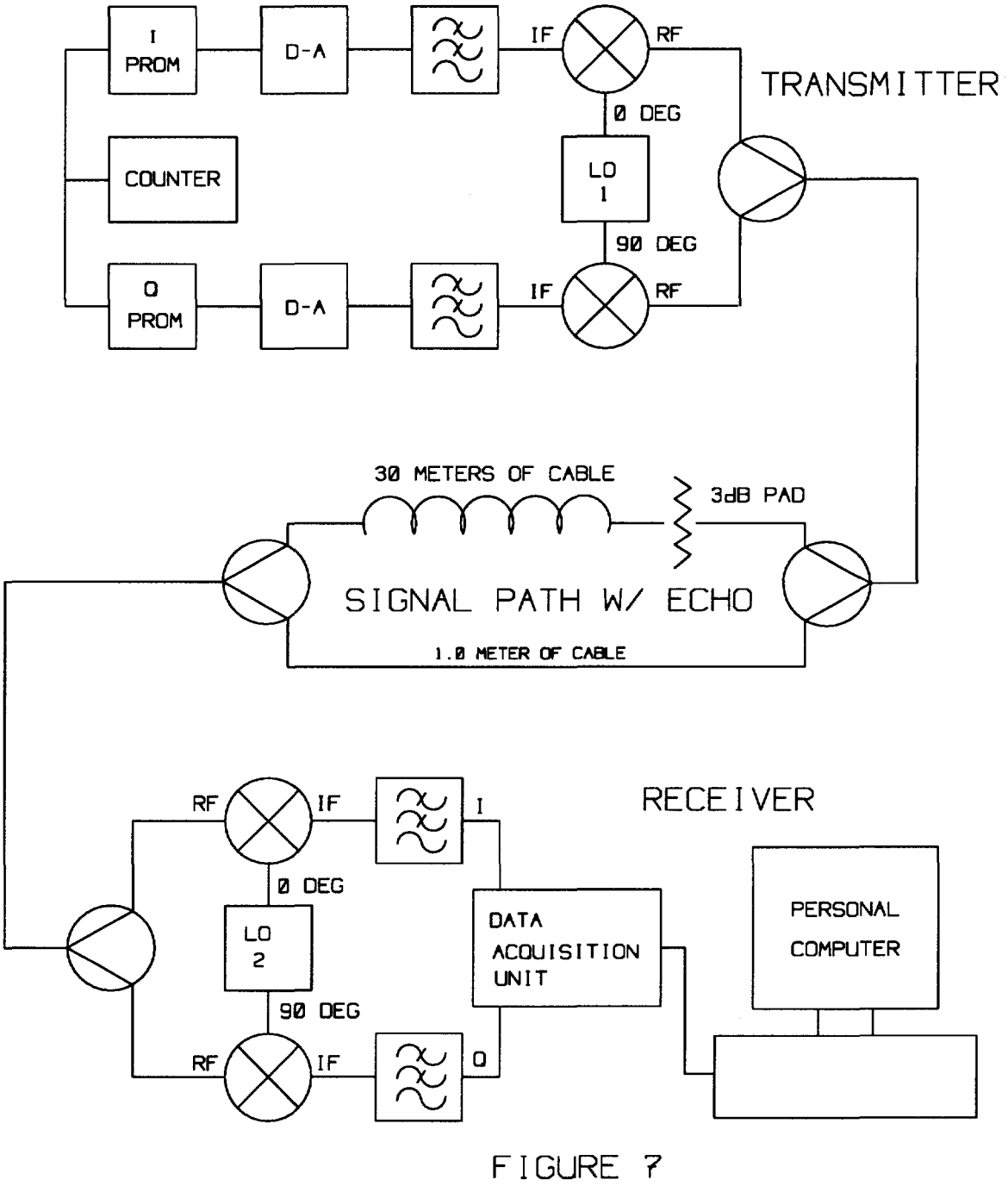

Figure 7 Block Diagrams of Hardware, Including a Transmitter, a Receiver, and a Signal Path that Creates an Echo

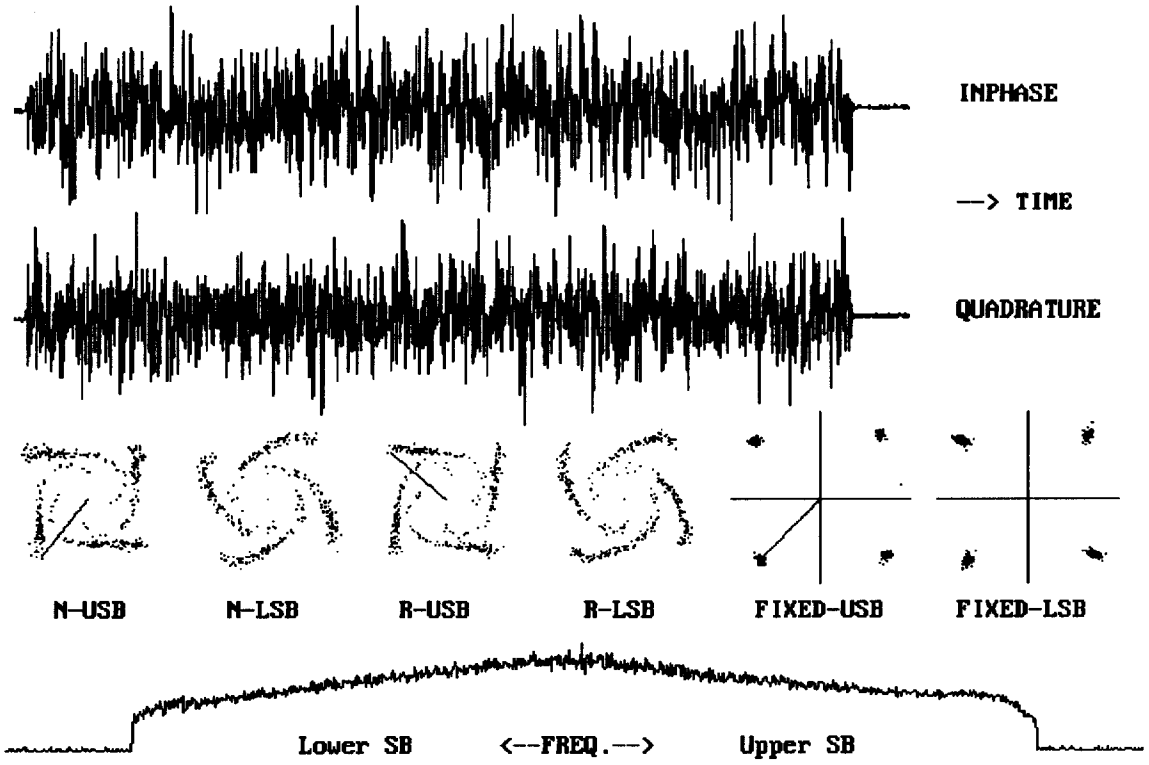

Figure 8 A Set of Plots Associated with a Received Burst Signal without an Echo

Top two traces: time domain plots from data acquisition unit. The R block follows the N block without pause. First four traces on third row: I-Q constellations of N and R points in the upper and lower sideband before correction. Last two traces on third row: I-Q constellations of upper and lower sidebands after correction. Bottom row: spectral traces of upper and lower sidebands.

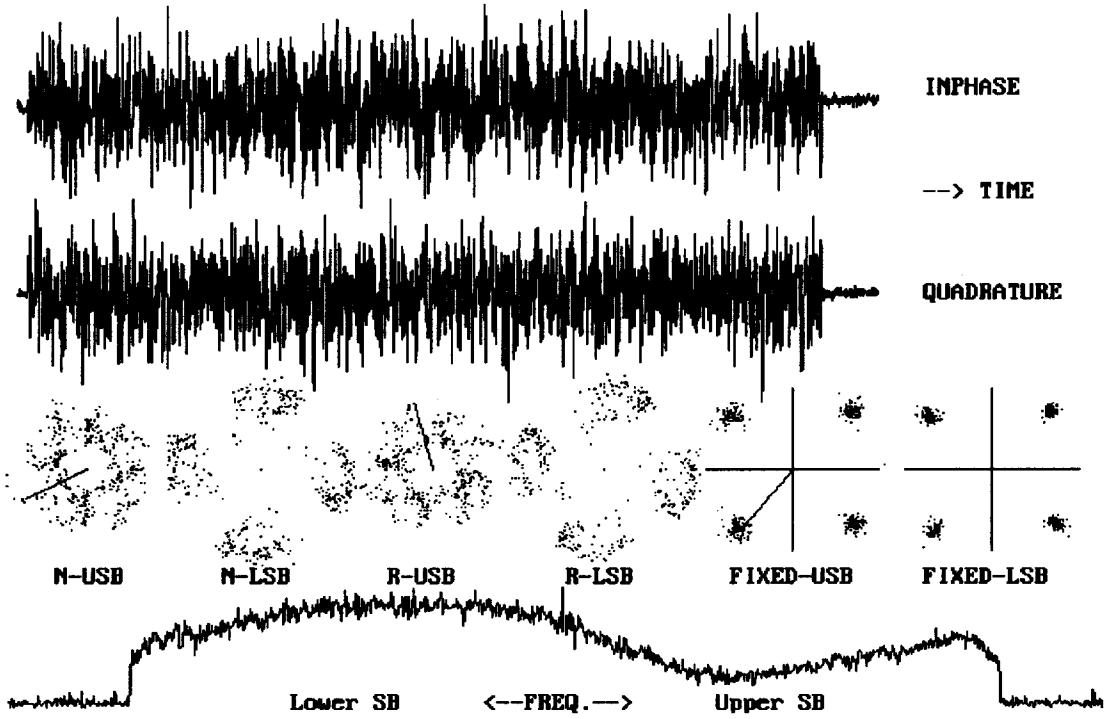

Figure 9 A Set of Plots Associated with a Received Burst with an Echo