EX PARTE OR LATE FILED

BELLSOUTH

Kathleen B. Levitz
Vice President-Federal Regulatory

Suite 900
1133-21st Street, N.W.
Washington, D.C. 20036-3351
202 463-4113
Fax: 202 463-4198
Internet: levitz.kathleen@bsc.bls.com

February 11, 1999

Ms. Magalie Roman Salas
Secretary
Federal Communications Commission
The Portals
445 12th Street S.W.
Washington, D.C. 20554

RECEIVED

FEB 11 1999

FEDERAL COMMUNICATIONS COMMISSION
OFFICE OF THE SECRETARY

Re: Written Ex Parte in CC Docket No. 98-121

Dear Ms. Salas:

Attached is the written ex parte presentation that BellSouth Corporation has made to Johnson Garrett of the Commission's Office of Plans and Policy. That ex parte consists of cover letter and a copy of the document "Description of the TELCOMP© Model and Results of its Application to the Atlanta LATA" prepared by Strategic Policy Research.

Pursuant to Section 1.1206(a)(1) of the Commission's rules, I am filing two copies of this notice and that written ex parte presentation in CC Docket 98-121 and ask that you please place both in the record of that proceeding.

Sincerely,

Kathleen B. Levitz

Kathleen B. Levitz
Vice President – Federal Regulatory

Attachment

cc: Johnson Garrett (w/o attachment)
Donald Stockdale (w/o attachment)
Jennifer Fabian (w/o attachment)
Jon Wilkins (w/o attachment)

No. of Copies rec'd 0+1
List ABCDE

BELLSOUTH

Kathleen B. Levitz
Vice President-Federal Regulatory

Suite 900
1133-21st Street, N.W.
Washington, D.C. 20036-3351
202 463-4113
Fax: 202 463-4198
Internet: levitz.kathleen@bsc.bls.com

RECEIVED

FEB 11 1999

FEDERAL COMMUNICATIONS COMMISSION
OFFICE OF THE SECRETARY

February 11, 1999

Mr. Johnson Garrett
Office of Plans and Policy
Federal Communications Commission
1919 M Street, NW, Room 822
Washington, D.C. 20554

Re: Written Ex Parte in CC Docket No. 98-121

Dear Mr. Johnson:

Attached is a copy of a study recently completed by Strategic Policy Research entitled "Description of the TELCOMP© Model and Results of its Application to the Atlanta LATA. The study uses the TELCOMP© model to develop a business case for CLEC entry into the Atlanta LATA.

Pursuant to Section 1.1206(a)(1) of the Commission's rules, I am filing two copies of this written ex parte presentation and asking the Commission's Secretary to place the study in the record of CC Docket No. 98-121.

Sincerely,

Kathleen B. Levitz

Kathleen B. Levitz
Vice President – Federal Regulatory

Attachment

cc: Jennifer Fabian Donald Stockdale Jon Wilkins

STRATEGIC
POLICY
RESEARCH

7979 OLD GEORGETOWN ROAD SUITE 700 BETHESDA, MARYLAND 20814-2429 301-718-0111 FAX 301-215-4033

EMAIL spri-info@spri.com WEBSITE www.spri.com

Description of the TELCOMP© Model and Results of its Application to the Atlanta LATA

January 21, 1999

I. Overview

The TELCOMP© model calculates the costs and revenues that a CLEC would experience if it provided local service utilizing unbundled network elements ("UNEs") for loop distribution and interoffice transmission, but provided its own switching equipment. The core of the model relies on clear and unambiguous data, such as locations and sizes of wire centers, existing traffic volumes, current revenues per line, and UNE prices. The model is also intended to yield conservatively high costs, precisely to dispel concerns that it is overly optimistic. All of the direct costs incurred by a CLEC — payments to the ILEC for network elements, ongoing operational costs and capital costs for owned equipment — are included. Both recurring and nonrecurring costs are calculated, with the latter being spread over the life of the installation in a manner similar to the treatment of capital costs. Revenues associated with the services supported by the modeled network are also calculated. Operations, marketing and other support costs are not specifically modeled, but are estimated as a percentage of revenue.

Various serving strategies can be analyzed, including serving all lines in the LATA, all lines in selected wire centers, or focusing service offerings to attract a larger proportion of high-revenue customers.

The model also includes variables to take account of possible synergies between the CLEC business and the interexchange business. These synergies apply to both marketing and

production. Because of these synergies, the CLEC business may be more attractive for inter-exchange carriers than for other entrants.

II. Model Structure and Key Assumptions

The specific system architecture is shown in Figures 1 and 2. Figure 1 details the network layout, showing what kinds of facilities are used to provide the various required service elements. Figure 2 is a detailed diagram of the wire center configuration at each ILEC CO, including the specific network elements that need to be obtained by the CLEC, and the equipment that needs to be placed in the collocation space. The primary structural assumptions are as follows:

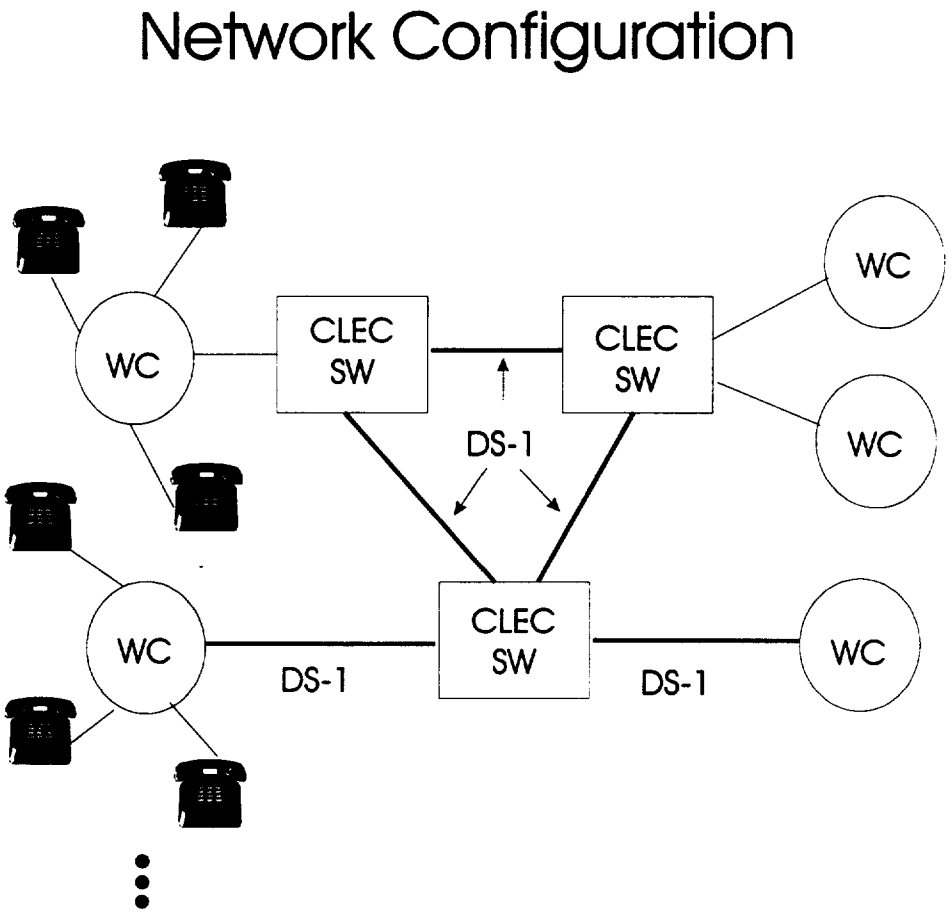

Figure 1

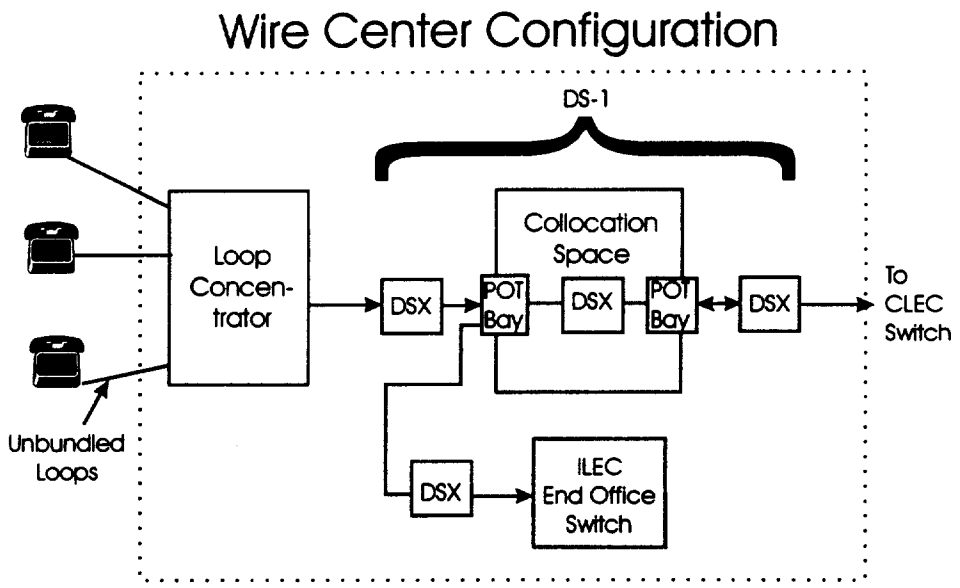

Figure 2

Note: Figure 2 shows two POT bays for clarity of exposition. There is actually only one POT bay in each collocated space, but each line that enters the collocated space transits the POT bay twice.

1) The CLEC will provide service everywhere in the LATA or some specified subset of it. It will stand ready to serve all customers in the defined areas, but may achieve different penetrations for different customer groups (grouped by bus/res and revenue stratum) depending upon its service offerings and pricing.
2) The CLEC will always use unbundled loops to reach its customers. It then necessarily collocates at the serving wired center. It also obtains a loop concentrator located at the serving wire center as an unbundled network element.
3) The CLEC uses DS-1 lines as UNEs to connect the serving wire center with its own serving switch. This is a high-cost assumption, since there may be cases where the CLEC could reduce costs by providing its own facilities or obtaining them from facilities-based CLECs, which may cost less than facilities obtained from the ILEC at UNE rates.
4) The CLEC will provide its own switches.

5) The CLEC will interconnect its own switches using leased DS-1 facilities obtained as UNEs. As is the case in item 3) above, this is a high-cost assumption. There may well be a more cost-effective ways for a CLEC to obtain these facilities.
6) The CLEC will provide trunks, again using leased DS-1 facilities, to deliver traffic terminating at the ILEC to the ILEC's terminating wire center.
7) If the CLEC is an interexchange carrier, it may provide interexchange service in conjunction with its local service. In this case it will incur additional expenses and reap additional revenues to the extent that new interexchange customers are attracted.

III. Cost Calculations

Using the above network structure and appropriate input data, the model calculates the following:

1) *The costs of connecting the customers' premises to the ILEC central office.*
This is simply the cost of an unbundled loop, containing both a non-recurring and recurring component.

2) *The costs of a loop concentrator.*
The loop concentrator is a device that multiplexes individual lines into DS-1 bit streams and also provides for line concentration of as much as two to one. In particular, the loop concentrators offered by BellSouth will accept as many as 96 lines and concentrate them onto two DS-1 lines. In this model, because there may be areas where the traffic is too heavy to permit the two-to-one concentration, we have conservatively assumed that 80 loops are multiplexed onto the two DS-1 channels. The costs that are incurred are the cost of the loop concentrator itself, which contains both a recurring and nonrecurring component, plus a per-line charge for each loop connected to the loop concentrator, denoted as a "CO Channel Interface."

3) *The costs of collocation at the wire center.*
This is a complex area, and may vary among ILECs. The structure assumed here follows the BellSouth method of collocating. Examining the wire center configuration in Figure 2, it can be seen that the loop and the loop concentrator are interconnected by the ILEC outside of the collocated space. The DS-1s that emerge from the loop concentrators transit a DSX frame to cross-connect to the collocated space. A Point of Termination (POT) bay serves as the interface between the ILEC network and the collocated space. The only equipment that the CLEC need purchase is a DSX frame to connect the DS-1s coming from the loop concentrator to the outgoing DS-1 line which ultimately connects to the CLEC switch. This connection to the outgoing line again transits the POT bay and a DSX frame. (Figure 2 shows two separate POT bays for clarity of exposition. In actuality, there is just one POT

bay for each collocated space, which the connections described here transit twice.) There is a small charge for each transit of a POT bay or a DSX frame. The situation is similar for trunks coming from the CLEC switch to terminate on the ILEC switch in the building.

It should be noted that this architecture precludes the need for the CLEC to dispatch to the collocated space unless the CLEC elects not to pre-wire and pre-inventory its collocated equipment. All additions, rearrangements and trouble isolation at the DS-0 level are done by the ILEC, since the CLEC does not have access to the individual DS-0 channels at this location. It is also assumed, since the DSX frame is virtually a passive device, that the collocation space is "cageless" which eliminates the need for a minimum square footage charge. The charges for collocation, in addition to the DSX cross-connects and POT bays mentioned above, comprise a one-time "application fee" and square footage costs. There are also charges for power, but since the DSX frame is virtually passive, these are negligible in this case.

The amount of space is calculated based on the number of DSX frames. A DSX frame, or bay, contains up to ten panels, each of which can accommodate ten DS-1 lines. Thus, the number of DSX bays in a central office can be calculated from the number of DS-1 lines that transit the collocated space. Each DSX frame requires approximately 7.5 square feet of space, which includes enough space to work on the unit.

4) *The costs of connecting the wire center to the CLEC switch.*
These costs are calculated based on the UNE prices for dedicated interoffice facilities, which include a fixed charge per DS-1 and a mileage charge. For all central offices other than the serving wire centers of CLEC switches, there is also a local channel charge, which is not mileage-dependent.

5) *The costs of interconnecting the CLEC switches, if there is more than one.*
It is assumed that the switches are fully interconnected with trunk groups engineered for 1-percent blocking in the busy hour and carried on DS-1 facilities obtained from the ILEC at UNE rates. We assume that every call is carried (if necessary) to the POP nearest to the terminating CO. Costs include an interoffice facility and two local channels for each channel between POPs.

6) *The costs to the CLEC of providing the switch to serve its customers.*
Since the CLEC is providing its own switch, the cost of switching is given by a capital cost per line. The total number of line terminations is the sum of the lines from all loop concentrators to the POP.

7) *The costs of terminating traffic on the ILEC network.*
This is the cost of the trunks that carry traffic from the CLEC switch to the ILEC terminating wire center. In order to avoid common transport and switching charges, it is assumed that the CLEC provides trunks, leased at UNE rates, from its switch to the ILEC switch where the call is to terminate. These trunks are also engineered for 1-percent blocking in the busy hour. As in the case of the facilities connecting the loops

to the CLEC switch, these trunks will incur interoffice dedicated transport and local channel charges as appropriate.

We assume that the traffic to and from the ILEC is equal. Under most interconnection agreements, the charges for call completion at the terminating switch are equal. Thus, net charges for call completion is zero.

8) *Total network cost of providing service.*
The sum of the above, including depreciation of capital expenditures, maintenance of capital equipment, amortization of non-recurring charges, and interest payments for both, is the total direct costs of providing local exchange service, exclusive of administration, billing, and marketing costs.

9) *The revenues to be realized by the CLEC.*
This will include all local, intraLATA, and vertical service revenues as well as interLATA access charges. It does not include private lines, terminal equipment, inside wire, or any other revenue which depends on equipment or facilities which are not included in the cost model.

10) *Additional revenues and costs associated with interexchange operations.*
Interexchange revenues are assumed to supplement the CLEC's local revenues. The costs of interexchange operations are estimated based on financial data from AT&T and MCI. Allowance is made for the high marketing and overhead costs of the interexchange business.

11) *Cash flow for each year of the ramp-up period.*

12) *Profit (or loss) for each year of the ramp-up period.*

13) *Rate of return over the study period.*
This assumes the business is "cashed out" at net book at the end of the period.

The input data required for TELCOMP are listed in Attachment 1. The costs used for Georgia are listed in Attachment 2. The cost model is implemented in the computer language Mathematica™, which is available from SPR on a diskette.

IV. Results

The model was run for the entire Atlanta LATA, using BellSouth UNE and collocation prices as outlined in Attachment 2. The results are shown in Tables 1 through 6.

Table 1, labeled "AT&T, 10, 10, Local" is the base case. It assumes that the CLEC switches are located at AT&T's points of presence, that all customers (all 10 deciles of business

and residence) are served equally and that the CLEC provides local service only. The ramp-up period takes five years, and ends up serving 153,459 lines, or 5 percent of the lines in the Atlanta LATA. The capital requirements (including non-recurring charges for UNEs) are about $6-million per year, with these being proportional to the number of lines added after the first year. In the first year, the capital cost per line is significantly higher than in subsequent years since the high-cost assumption is made that a full DSX frame is placed in every collocation space and a collocation space is established in every CO in the LATA. In this case, the higher cost per line in the first year, combined with the smaller number of lines added (it is assumed it takes a year to ramp up to the full deployment rate), leads to a total capital cost which is the same as in subsequent years. The business is profitable after the first year. It begins to yield a positive cash flow in the third year, while realizing a rate of return on capital of 44 percent over the study period. By the fifth year, cumulative cash flow is positive, and a substantial flow of profits is being realized.

Table 2, labeled "AT&T, 3,10, local" differs from the case in Table 1 only in that the CLEC targets its offerings to attract only business customers (all deciles) and the top three deciles (ordered by total revenue) of residential customers. This is a substantially more profitable business opportunity. Although attracting fewer customers, profits are positive in the first year, and are greater in all years than would be achieved by serving all customers (the previous scenario). Also, because the number of lines is smaller, the capital outlays per year are substantially less. Cash flow turns positive after the first year, and the project demonstrates a 99 percent rate of return. Clearly, this is a more attractive strategy, and is of a type that any rational competitor would follow. Indeed, the fact that total profits are greater when a selected market is targeted, even though total revenues are less, indicates that the CLEC would actually lose money on every residential customer served beyond the high-revenue 30 percent. (There may be business customers in the lower deciles which also would generate losses, but this question has not been examined.)

Table 3, labeled "AT&T, 10,10,LD" shows a similar scenario to that outlined in Table 1. However, in this scenario the CLEC is AT&T, which obviously also provides long-distance interexchange service. It is assumed here that AT&T gets 30 percent of the customers' interexchange revenues over and above what AT&T would otherwise have gotten (and over and above access charges). The modest percentage reflects the fact that AT&T would likely have

gotten a large percentage of the interexchange revenues in any event. In this scenario, the AT&T points of presence are used as the location of the CLEC switches. The average price of inter-exchange service in all the "LD" scenarios is AT&T's average revenue per minute. This price reflects the discounts, relative to standard tariffs for message toll service, that AT&T and MCI routinely offer to large customers.

Both the revenues and costs are somewhat higher than was experienced when only local service was provided, since both of these are increased by the opportunities and costs of expanding the long-distance business. Because the long-distance business is profitable, revenues exceed costs, improving the result outlined in Table 1 to a return of 70 percent. — almost 30 points higher than the case without long distance.

Table 4, labeled "AT&T, 3, 10, LD," builds on this strategy. We continue to assume that the CLEC is AT&T, but that, in addition to providing long-distance service, it also targets business and high-revenue residential customers. This is an even more profitable scenario. Costs are reduced because fewer customers are served, low-revenue residential customers are not targeted, and long-distance profits are realized. In this case, the profits are larger than in any previous case, leading to a rate of return of 134 percent.

Table 5, labeled "Worldcom, 10, 10, LD" is the same scenario as described in Table 3, except that the CLEC switch is assumed to be at Worldcom's single point of presence in the Atlanta LATA. Also, because MCI Worldcom has such a small market share compared with AT&T, it is assumed that it will get 60 percent of the customers' interexchange business over and above what it would otherwise have gotten. This percentage is higher than in Table 3 because MCI Worldcom (unlike AT&T) would probably otherwise have gotten only a moderate portion of the IXC revenues. The increased long-distance opportunities pay off handsomely in this scenario, leading to a positive cash flow by the second year and a 101 percent rate of return.

Table 6 follows the same pattern. In this case, MCI Worldcom targets all business and high-revenue residence customers while also benefiting from long-distance revenues. This case shows the highest profits among the cases studied, yielding a rate of return of 180 percent.

All of the scenarios reported here were based on a five-year ramp-up period. Although this seems like a reasonable rate, it is possible that some carriers may wish to develop their market more rapidly. Such a course is not likely to change the bottom line very much, although it will, of course, require a more rapid infusion of capital. Indeed, a previous, simpler model

which merely took a "snapshot" of the situation at full deployment, which did not consider non-recurring costs or long distance, and which assumed a rate of $2.50 per line per month to cover all collocation costs, generated costs for the non-LD cases which are very close to those reported here at full deployment.[1] We may thus conclude that line-related costs such as the unbundled loop, the loop concentrator, the related DS-1s and the switch, along with the revenue per line, dominate the calculations. More precision in other parameters will not alter the basic conclusions.

It seems clear from the above analyses that the availability of UNEs at the listed prices provide ample opportunity for a prospective CLEC to enter the local exchange business in the Atlanta LATA. Capital requirements are quite modest compared with the achievable net revenues, leading to very high rates of return. However, it may be useful to make a few observations about some implications of the model and other issues that could affect the practical ability of a CLEC to enter the market.

First of all, we have selected the objective penetration — 5 percent — on the basis that anything smaller would not be meaningful in demonstrating the possibility of effective competition, while anything larger would yield an even more favorable result. It was also felt that a true competitive presence would be best demonstrated if the CLEC operated in the entire LATA, which comprises 108 wire centers. Previous experiments had shown that restriction to a subset of wire centers would not, in any event, materially affect the results.

Similarly, it was anticipated that competition would certainly be said to exist if the CLEC served all segments of the population equally. Hence the "10, 10" scenarios. Recognizing that this is an unlikely business strategy, however, cases were examined where targeted marketing plans would be more attractive to certain demographic groups, measured by revenue — the "10, 3" scenarios.

Nonrecurring costs have been calculated and amortized so they can be accounted for as a cost of doing business, and provide part of the costs to be offset against the revenue. They are also considered as part of the cash flow analysis. Support costs, including marketing, billing, customer service and the like, can vary enormously, depending upon whether the entrant is a

---

[1] *Implementing Section 271; Private Gain vs. Public Harm,* prepared by SPR on behalf of BellSouth Telecommunications, August 18, 1998.

company such as AT&T, which already has a substantial presence in the local market, and people, facilities and billing systems in place; or whether it is a company that must start from scratch. Furthermore, all the parties that have specific knowledge of these costs have great incentives to overstate or understate them. Hence, such costs are subject to intense debate. They cannot be firmly estimated, so we have developed results assuming that the so-called SG&A expenses are equal to 30 percent of revenues, a ratio which is typical of communications carriers.

There has been much discussion during the course of the various "271" proceedings about the adequacy of the ILECs' OSS systems. This problem is mitigated, but not eliminated, by the serving architecture selected for the model. The only BellSouth OSS system which is needed to support this architecture is the provisioning system. Several different types of connections must be provisioned, as follows:

- *Collocation and DS-1 lines.*

  The collocation space is provided only once in each wire center, and subsequent operations are only required when DS-1 lines are added. Normal ordering and inventory procedures (*e.g.*, the CLEC will generally order several DS-1s at a time to cover its forecasted needs for some future interval) should keep the number of provisioning events to a minimum for DS-1 lines and associated cross-connects.

- *Individual customer lines using unbundled loops.*

  This is the area where competitors have raised the most concern about the adequacy of BellSouth's systems. However, the scenario represented by the TELCOMP© model in this analysis evidences a level of activity which is so small compared with BellSouth's ordinary connect and disconnect activity that it strains credibility to question BellSouth's ability to meet the demands using existing systems. Specifically, the full deployment scenario at a 5-percent objective penetration level envisions a maximum buildout of 153,000 lines over a period of five years, with a maximum annual installation rate of 34,000 lines per year. If we assume a churn rate of 1.5 (that is, 1.5 connects and disconnects for each line gained), this leads to an activity level of 51,000 per year. (BellSouth, of course, experiences a much higher ratio of connects and disconnects to net gain, but they are growing very slowly. In a high-growth situation, the ratio of "churn" to growth should be much smaller.) In contrast, BellSouth's normal order level activity for the Atlanta LATA is in the vicinity of 1,600,000 inward plus outward movements per year, or over 30 times the rate of CLEC connections.

Put another way, the entrance of a CLEC into the market, using the architecture posited in this model, will cause line connection activity amounting to at most about 3.2 percent of BellSouth's normal activity level. If the more likely targeted strategy is followed, the maximum number of installations is 19,000, leading to an activity level of 28,500 connects and disconnects per year, or 1.8 percent of BellSouth's normal activity level. A more rapid rollout or a higher penetration will, of course, increase these numbers somewhat, but it seems unlikely that they will reach a level where providing this service will be difficult.

Finally, as mentioned above, the CLEC has ample opportunity to reduce costs still further through selective deployment of its own facilities. In addition, there is an opportunity in the serving scenarios we have outlined here for the CLEC to offer advanced services (which are largely switch-based) and capture the corresponding revenues.

V. Conclusions

We conclude from this analysis that, under the existing arrangements for interconnection and leasing of unbundled network elements, a large CLEC, particularly an interexchange carrier, can profitably provide local service in the Atlanta LATA in any of a number of ways. It can make a profit by serving all customers equally, a greater profit by targeting its offerings to high-revenue customers, and even greater profits by integrating local service with interexchange service.

Given these results, it thus seems likely that competition in the local exchange would initially be integrated with long-distance service to the maximum extent possible, and competitive offerings would be directed towards high-revenue customers. Despite the fact that all scenarios are profitable, CLECs have little incentive to offer pricing plans that are attractive to lower revenue groups, since such customers reduce their aggregate profits. This is an economic fact of life, and neither Congressional edicts nor state regulators are in a position to change it. The fact that IXCs choose an optimal business strategy for entering local markets that slights some consumers does not supply a basis for denying *all* consumers the benefits of additional competition in long-distance services.

Economic reality is that there is *today* no meaningful economic barrier to local competition in this market. If one seeks an explanation for the failure of IXC entry to occur, one

must look elsewhere because the IXCs' failure cannot be accounted for in terms of economic barriers to competition. To the contrary, ample rewards are apparently available. We would respectfully suggest that IXC failures primarily reflect the loss of protection from RBOC competition their entry into local markets would trigger, as well as strategically motivated attempts to leverage their entry decisions in the regulatory arena to extract even more favorable terms than those *already available.*

Attachment 1

Data Required for Competitive Network Model

A. For each wire center:

1. Name (CLLI Code or other);
2. V&H Coordinates (location);
3. Number of business lines in service;
4. Number of residential lines in service;
5. Originating intraLATA and local Minutes of Use (MOU);
6. Originating IntraLATA busy hour traffic volumes in erlangs (to be inferred from monthly MOU by dividing by 12,000);
7. Total business revenue, including local service, usage, intraLATA toll, SLC, vertical services and interLATA access;
8. Total residence revenue, including local service, usage, intraLATA toll, SLC, vertical services and interLATA access.

B. For the region as a whole:

1. V&H Coordinates of CLEC POPs (use AT&T/Teleport and MCI Worldcom as defaults);
2. Unbundled loop prices (in some jurisdictions this may vary by wire center, but Georgia has a single rate);
3. Interoffice DS1 UNE rates;
4. DS-1 local channel UNE prices;
5. Loop concentrator UNE prices;
6. Collocation charges;
7. Interconnection prices;
8. Distribution of business and residence revenues by customer.

C. Assumptions about competitor's network and services:

1. Fraction of lines served by CLEC (penetration of target market);
2. Target markets selected, by revenue group (*e.g.*, all bus, top 30 percent res);

3. Capital cost per line for switching equipment;
4. Capital cost of DSX frames;
5. Cost of capital;
6. Depreciation lives for switching equipment;
7. Switch maintenance factor;
8. Connection lives of various leased facilities;
9. Loading factors for billing, marketing, *etc.*;
10. Ramp-up period;
11. G & A costs as a fraction of revenues;
12. Additional interexchange customers served;
13. Additional interexchange revenue;
14. Additional interexchange costs.

Attachment 2

Model Assumptions and Unit Costs for Georgia

A. Recurring costs ($/month)

1. Cost of an unbundled loop = $16.51 per loop
2. Cost of CO channel interface (for loop concentrator) = $0.9016 per line
3. Cost of loop concentrators = $262 per unit
4. Cost of DS-1 cross-connects = $8.00 per cross-connect
5. Cost of a POT bay = $1.20 per DS-1
6. UNE prices of a DS1 line = $76.47 + $.4523 per mile
7. UNE prices for a DS-1 local channel = $38.36
8. Cost per square foot for collocation space = $7.50
9. Power cost for collocation = $5.00 per ampere (negligible for this architecture)
10. G&A costs = 30 percent of revenues

B. Non-recurring Costs

1. Unbundled loop = $42.64 for the first line per customer; $31.33 for each subsequent line. Assume 1.2 lines per location for residence and 2.3 lines per location for business.
2. CO channel interface = $20.87
3. Loop concentrator = $308.13 for the first in each central office, $76.33 for each additional unit.
4. DS-1 cross-connect = $155 for the first in each central office, $27 for each subsequent cross-connect ordered at the same time.
5. DS-1 interoffice facility = $147.07 for the first unit in each central office, $111.75 for each additional unit.
6. DS-1 Local channel = $356.15 for the first unit in each central office, $312.89 for each additional unit
7. Space preparation cost per square foot for collocation = $100
8. Application fee for collocation = $3,850 per central office

C. Capital Costs

1. Capital cost of a switch = $100 per line
2. Capital cost of a DSX frame = $20,000 EF&I
3. Maintenance cost for switching = 4 percent of capital

D. Other Assumptions

1. Service provided in entire LATA
2. Ramp-up period = 5 years
3. Cost of capital = 15 percent
4. Depreciation line = 7 years
5. Amortization period for non-recurring costs of facilities other than loops = 7 years
6. Amortization period for non-recurring loop costs = 2 years
7. Penetration of target market = 5 percent

AT&T,10,10,Local

Results by Year

	Year 1	Year 2	Year 3	Year 4	Year 5
Lines in Service	17,050	51,151	85,255	119,351	153,459
Lines Added	17,050	34,101	34,104	34,096	34,108
G&A Exp/line/month	$14.16	$14.16	$14.16	$14.16	$14.16
Total Network Expenses/line/month	$34.24	$29.88	$28.80	$28.22	$27.84
Total Capital Expenditures/line/year	$364.67	$122.85	$74.07	$53.26	$41.92
Total Depreciation, Amortization & Maintenance/line/month	$5.92	$3.85	$3.19	$2.80	$2.52
Total Revenue/line/month	$47.22	$47.22	$47.22	$47.22	$47.22
Total Capital Expenditures per year	$6,217,675	$6,283,895	$6,315,121	$6,357,077	$6,432,246
Total Capital Expenditures per line added per year	$365	$184	$185	$186	$189
Total Revenue per year	$9,660,317	$28,981,517	$48,304,417	$67,622,785	$86,947,951
Total Expenses per year	$9,902,911	$27,035,579	$43,955,841	$60,708,526	$77,347,266
Profit per year	($242,595)	$1,945,938	$4,348,576	$6,914,259	$9,600,685
Cash Flow per year	($5,404,626)	($2,267,563)	$870,984	$3,993,871	$7,091,005
Cumulative Cash Flow	($5,404,626)	($7,672,189)	($6,801,205)	($2,807,334)	$4,283,670
Rate of Return	43.84%				

Input Parameters

AT&T POPs	5
Residential users	All 10 deciles
Business users	All 10 deciles
Central Offices (COs) included	All 108
Objective Penetration Rate After 5 years	5%
Ramp-up	5 years
Long Distance included	No
G&A Percentage	30%

TABLE 1

AT&T,3,10,Local

Results by Year

	Year 1	Year 2	Year 3	Year 4	Year 5
Lines in Service	9,323	27,967	46,615	65,264	83,910
Lines Added	9,323	18,644	18,648	18,649	18,646
G&A Exp/line/month	$17.89	$17.89	$17.89	$17.89	$17.89
Total Network Expenses/line/month	$40.18	$32.27	$30.40	$29.52	$29.00
Total Capital Expenditures/line/year	$519.47	$125.68	$75.08	$54.12	$42.45
Total Depreciation, Amortization & Maintenance/line/month	$8.09	$4.51	$3.55	$3.03	$2.68
Total Revenue/line/month	$59.64	$59.64	$59.64	$59.64	$59.64
Total Capital Expenditures per year	$4,843,065	$3,514,876	$3,499,650	$3,531,788	$3,562,011
Total Capital Expenditures per line added per year	$519	$189	$188	$189	$191
Total Revenue per year	$6,672,100	$20,014,867	$33,360,498	$46,706,844	$60,051,043
Total Expenses per year	$6,496,636	$16,833,599	$27,015,460	$37,133,828	$47,220,283
Profit per year	$175,464	$3,181,269	$6,345,038	$9,573,016	$12,830,760
Cash Flow per year	($3,886,705)	$980,285	$4,557,027	$8,064,194	$11,542,334
Cumulative Cash Flow	($3,886,705)	($2,906,419)	$1,650,608	$9,714,802	$21,257,136

Rate of Return	99.11%

Input Parameters

AT&T POPs	5
Residential users	3 deciles
Business users	All 10 deciles
Central Offices (COs) included	All 108
Objective Penetration Rate After 5 years	5%
Ramp-up	5 years
Long Distance included	No
G&A Percentage	30%

TABLE 2

AT&T,10,10,LD

Results by Year

	Year 1	Year 2	Year 3	Year 4	Year 5
Lines in Service	17,050	51,151	85,255	119,351	153,459
Lines Added	17,050	34,101	34,104	34,096	34,108
G&A Exp/line/month	$15.68	$15.68	$15.68	$15.68	$15.68
Total Network Expenses/line/month	$35.48	$31.12	$30.04	$29.46	$29.07
Total Capital Expenditures/line/year	$370.21	$126.54	$76.29	$54.85	$43.15
Total Depreciation, Amortization & Maintenance/line/month	$6.00	$3.93	$3.27	$2.87	$2.58
Total Revenue/line/month	$52.28	$52.28	$52.28	$52.28	$52.28
Total Capital Expenditures per year	$6,312,102	$6,472,754	$6,503,997	$6,545,908	$6,621,144
Total Capital Expenditures per line added per year	$370	$190	$191	$192	$194
Total Revenue per year	$10,695,992	$32,088,603	$53,483,096	$74,872,571	$96,269,574
Total Expenses per year	$10,468,837	$28,731,461	$46,778,200	$64,654,028	$82,413,681
Profit per year	$227,155	$3,357,143	$6,704,896	$10,218,543	$13,855,893
Cash Flow per year	($5,015,814)	($1,006,675)	$3,098,447	$7,187,744	$11,251,517
Cumulative Cash Flow	($5,015,814)	($6,022,489)	($2,924,042)	$4,263,702	$15,515,218
Rate of Return	70.05%				

Input Parameters

AT&T POPs	5
Residential users	All 10 deciles
Business users	All 10 deciles
Central Offices (COs) included	All 108
Objective Penetration Rate After 5 years	5%
Ramp-up	5 years
Long Distance included	Yes
G&A Percentage	30%

TABLE 3

AT&T,3,10,LD

Results by Year

	Year 1	Year 2	Year 3	Year 4	Year 5
Lines in Service	9,323	27,967	46,615	65,264	83,910
Lines Added	9,323	18,644	18,648	18,649	18,646
G&A Exp/line/month	$20.11	$20.11	$20.11	$20.11	$20.11
Total Network Expenses/line/month	$42.00	$34.09	$32.22	$31.33	$30.81
Total Capital Expenditures/line/year	$527.57	$131.08	$78.32	$56.43	$44.25
Total Depreciation, Amortization & Maintenance/line/month	$8.21	$4.62	$3.66	$3.13	$2.78
Total Revenue/line/month	$67.04	$67.04	$67.04	$67.04	$67.04
Total Capital Expenditures per year	$4,918,575	$3,665,880	$3,650,687	$3,682,833	$3,713,032
Total Capital Expenditures per line added per year	$528	$197	$196	$197	$199
Total Revenue per year	$7,500,299	$22,499,288	$37,501,495	$52,504,506	$67,505,104
Total Expenses per year	$6,949,190	$18,189,623	$29,272,286	$40,289,052	$51,271,656
Profit per year	$551,109	$4,309,665	$8,229,208	$12,215,454	$16,233,448
Cash Flow per year	($3,575,783)	$1,988,495	$6,338,153	$10,618,302	$14,869,332
Cumulative Cash Flow	($3,575,783)	($1,587,287)	$4,750,866	$15,369,168	$30,238,500
Rate of Return	134.07%				

Input Parameters

AT&T POPs	5
Residential users	3 deciles
Business users	All 10 deciles
Central Offices (COs) included	All 108
Objective Penetration Rate After 5 years	5%
Ramp-up	5 years
Long Distance included	Yes
G&A Percentage	30%

TABLE 4

Worldcom,10,10, LD

Results by Year

	Year 1	Year 2	Year 3	Year 4	Year 5
Lines in Service	17,050	51,151	85,255	119,351	153,459
Lines Added	17,050	34,101	34,104	34,096	34,108
G&A Exp/line/month	$17.20	$17.20	$17.20	$17.20	$17.20
Total Network Expenses/line/month	$36.54	$32.18	$31.10	$30.51	$30.12
Total Capital Expenditures/line/year	$377.69	$131.11	$79.03	$56.81	$44.67
Total Depreciation, Amortization & Maintenance/line/month	$6.11	$4.03	$3.36	$2.96	$2.67
Total Revenue/line/month	$57.34	$57.34	$57.34	$57.34	$57.34
Total Capital Expenditures per year	$6,439,544	$6,706,362	$6,737,915	$6,779,841	$6,854,896
Total Capital Expenditures per line added per year	$378	$197	$198	$199	$201
Total Revenue per year	$11,731,667	$35,195,689	$58,661,775	$82,122,357	$105,591,196
Total Expenses per year	$10,996,017	$30,310,891	$49,412,552	$68,338,343	$87,147,222
Profit per year	$735,650	$4,884,798	$9,249,224	$13,784,014	$18,443,973
Cash Flow per year	($4,616,556)	$336,350	$5,484,253	$10,617,328	$15,723,277
Cumulative Cash Flow	($4,616,556)	($4,280,206)	$1,204,047	$11,821,375	$27,544,652
Rate of Return	101.33%				

Input Parameters

WorldCom POPs	1
Residential users	All 10 deciles
Business users	All 10 deciles
Central Offices (COs) included	All 108
Objective Penetration Rate After 5 years	5%
Ramp-up	5 years
Long Distance included	Yes
G&A Percentage	30%

TABLE 5

WorldCom,3,10,LD

Results by Year

	Year 1	Year 2	Year 3	Year 4	Year 5
Lines in Service	9,323	27,967	46,615	65,264	83,910
Lines Added	9,323	18,644	18,648	18,649	18,646
G&A Exp/line/month	$22.33	$22.33	$22.33	$22.33	$22.33
Total Network Expenses/line/month	$43.32	$35.40	$33.53	$32.64	$32.12
Total Capital Expenditures/line/year	$538.29	$137.44	$82.12	$59.15	$46.37
Total Depreciation, Amortization & Maintenance/line/month	$8.36	$4.76	$3.79	$3.26	$2.90
Total Revenue/line/month	$74.44	$74.44	$74.44	$74.44	$74.44
Total Capital Expenditures per year	$5,018,457	$3,843,781	$3,828,162	$3,860,657	$3,891,149
Total Capital Expenditures per line added per year	$538	$206	$205	$207	$209
Total Revenue per year	$8,328,498	$24,983,708	$41,642,492	$58,302,169	$74,959,165
Total Expenses per year	$7,345,296	$19,374,013	$31,249,901	$43,055,911	$54,830,081
Profit per year	$983,202	$5,609,696	$10,392,591	$15,246,258	$20,129,084
Cash Flow per year	($3,229,302)	$3,148,270	$8,381,681	$13,546,074	$18,676,404
Cumulative Cash Flow	($3,229,302)	($81,033)	$8,300,648	$21,846,722	$40,523,125
Rate of Return	180.01%				

Input Parameters

WorldCom POPs	1
Residential users	3 deciles
Business users	All 10 deciles
Central Offices (COs) included	All 108
Objective Penetration Rate After 5 years	5%
Ramp-up	5 years
Long Distance included	Yes
G&A Percentage	30%

TABLE 6