EX PARTE OR LATE FILED

AT&T

295 North Maple Ave
Basking Ridge, NJ 07920

March 17, 1999

RECEIVED
MAR 17 1999
FEDERAL COMMUNICATIONS COMMISSION
OFFICE OF THE SECRETARY

Ms. Magalie Roman Salas
Secretary
Federal Communications Commission
445 Twelfth Street, S.W.
Washington, D.C. 20554

RE: Ex Parte Presentation
CC Docket No. 96-45 – Universal Service/Proxy Cost Models
CC Docket No. 97-160 – Forward-Looking Cost Mechanism

Dear Ms. Salas:

On March 16, 1999, Richard Clarke and Mike Lieberman of AT&T, Chris Frentrup of MCI WorldCom and John Donovan of Telecom Visions, met with Craig Brown, Chuck Keller, Mark Kennet, Katie King, Bob Loube, Jeff Prisbrey, Bill Sharkey, Richard Smith and Richard Cameron of the FCC.

The purpose of this meeting was to discuss the analyses that we have performed on the Synthesis Model, using the most recently available data and input values. Our preliminary analyses appear to indicate that current results from the Synthesis Model demonstrate significant instability relative to the results generated by its previous version. Moreover, its investment cost figures appear to fail certain tests of internal logic, and are elevated substantially above reasonable forward-looking levels.

We indicated that we believe these results stem both from problems in the Synthesis Model's execution of its intended program logic, and in the sample input values proposed for testing the model. In particular, we demonstrated that numerous input value proposals by the ILECs fail simple tests of logic, and need correction. We intend to continue our analyses to help isolate further the cause of these problems and develop and suggest necessary solutions.

A copy of our presentation materials is attached. Two copies of this Notice are being submitted to the Secretary of the FCC in accordance with Section 1.1206(a)(2) of the Commission's rules.

Sincerely,

Richard N. Clarke /ha

Richard N. Clarke

Attachments

cc: Craig Brown, Chuck Keller, Mark Kennet, Katie King, Bob Loube, Jeff Prisbrey, Bill Sharkey, Richard Smith, Richard Cameron, Sheryl Todd

Recycled Paper

Synthesis Model Platform/Input Value Issues

1 Overview

The construction of a telecommunications cost model is an integrated task. Economic engineering choices about technologies must be made in concert with knowledge about the input costs associated with the alternative technologies. Because models necessarily are simplifications of the actual decision making process, it is impossible for optimizing routines within the model to substitute for all of the integrated economic engineering that occurs in the real world – and which should be brought to model development.

As AT&T and MCI WorldCom indicated in their Comments and Reply Comments on the Commission's Synthesis Model (SM), without full access to the SM platform *and* the customer location and "user-adjustable" input values intended to be used by the model platform, it is difficult to determine whether the overall combination of the SM and its data will provide an accurate estimate of the forward-looking economic costs of universal service.[1]

With the most recent releases of customer location data from PNR (both real points and surrogate points) and the Commission's sample values for the SM's user-adjustable inputs, AT&T and MCI WorldCom have begun to be able to run the Synthesis Model in a fashion that permits some preliminary conclusions about the stability and validity of the SM platform and its inputs values. We have continued concern that the cost results from the SM appear not to have stabilized, but have grown substantially between the model and data versions that were available in late February versus those that have become available in early March. This appears to be the result of certain continued adjustments to the model platform, but is also importantly due to the inclusion of certain improper values proposed for the SM's user-adjustable inputs. The unfortunate result is that cost results from the SM may be uneconomic. This is highlighted by the fact that in certain study areas, the SM appears to calculate overall universal service plant investments that exceed significantly overall embedded gross investment (TPIS) – which incorporates all of an ILEC's Part 32 investments.[2] Such a result simply does not comport with well-accepted industry and Commission findings that ILEC total factor productivity and X-factors are distinctly positive.

While the greatest contributor to these excess modeled investments is the cable and wire accounts, AT&T and MCI WorldCom believe that excessive figures for numerous other of the SM's user-adjustable inputs also contribute significantly to this result. This document will first discuss some of the methodological reasons why proposed model

---

1 Comments of AT&T Corp. on Model Platform Development Issues, CC Dkt. No. 96-45 and 97-160, August 28, 1998 and Reply Comments, September 11, 1998.

2 See attachments describing these increases in modeled investments.

input values may tend to overstate the forward-looking input costs that LECs providing universal service are likely to face. Second, the document will discuss several of the particular input values that appear to be mis-specified.

2 *Methodological Issues*

In selecting the input values to be used in its Synthesis Model, the Commission must take care to ensure that the values chosen bear a logical technical and economic relationship to each other. For example, as the selected input values for the cost of cable rise, it is inconsistent to choose a lower fill factor for that cable, because no efficient firm would fail to reduce its installation of excess capacity as the cost of installing that capacity increases. Similarly, simply due to feasibility, one would expect more sharing of aerial structures than of underground structures and more sharing of underground structures than buried structures. Thus, input values should be chosen to represent the values that would be reflected *as a group* in an efficient firm, not simply selected from an amalgam of ILEC practices without adequate regard for their internal consistency.

Developing the input values for the SM separately from the development of the model platform may have imposed a penalty in consistency and cost. An example is as follows. Initially, the SM platform was designed to serve small remote clusters using copper T-1 digital loop carrier (DLC). This is an economic solution that is being employed by many ILECs to serve sparsely located distant customers with high quality voice and data services.[3] Because of this platform decision, relatively less customer clustering, engineering or input value investigation has been devoted to determining the most efficient costs for serving such customers using small fiber DLC. But if it is now decided not to use copper DLC in the SM, the currently existing SM platform and its inputs will surely overestimate the cost of fiber DLC use – because this platform's engineering and input value choices concerning fiber DLC have heretofore been focused on the cost of serving relatively large, dense customer locations.

A second practice that may have had the unintended effect of inflating input values is to accept use of self-selected embedded data provided by the ILECs. Because the provision of these data by the ILECs has been voluntary, it is only natural to expect that those ILECs in possession of high cost data have chosen to provide it, while ILECs in possession of low cost data have stood mute. Examples, provided by Sprint both as itself and as a BCPM sponsor are particularly instructive.

The costs of copper cable specified in the HAI and BCPM models have matched each other very closely. The HAI numbers were based on the experience of its outside plant engineers, and the BCPM numbers represented the collective judgement of its sponsors: Sprint, U S West and BellSouth. Both were intended to be national averages – which is the proper input specification to a federal USF model that is intended to calculate high cost support on a nondiscriminatory national basis. The validity of these copper cable cost numbers was further affirmed in Comments by Aliant on January 8, 1999. However,

[3] See Teltrend advertisement, attached as Attachment A.

on February 8, 1999, Sprint made an ex parte filing alleging that in certain of its study areas its historical cable costs are significantly higher than its previously advocated national average figures.[4] While it may certainly be true that Sprint has historical costs on its books in excess of national averages, it is simply inappropriate for such spotty, self-censored historical "data" to trump more globally considered numbers.[5] In any event, even if these data were provided on a comprehensive fashion by all ILECs, no argument has yet been advanced that such historical data provide an accurate forward-looking representation.

In sum, unless Sprint is willing to identify the study areas whose input costs are over-estimated by national averages and gain agreement from their owners that they should be modeled with below-average input costs, the SM will be left in a "Lake Wobegon" situation of assuming greater than average costs are experienced everywhere. This is simply a recipe for wholesale cost over-recovery.

3 Outside Plant Input Values

3.1 FEEDDIST Module

Inputs to the FEEDDIST module appear to have "turned off" the SM's use of copper T-1 DLC to serve remote customer clusters with few lines. This has the effect of forcing the SM to engineer individual 24-line fiber remote terminals for each of these clusters. But because the current input values for fiber DLC do not scale down with lines, the fixed DLC cost of serving such locations is nearly indistinguishable from that of serving locations with four or more times as many lines. Thus, given current input values, this likely represents an uneconomic engineering choice that causes the modeled cost of serving small clusters to be unreasonably high. This problem should be addressed using one or more of the following remedies.

- Revert to using copper T-1 DLC to serve small remote clusters.

---

4 Curiously, Sprint did not include its Nevada study area in the data it proffered in support of this claim. This is one of Sprint's largest study areas, and is reputed to be its lowest cost. Inclusion of Nevada would have also likely ameliorated the paucity of data observations that Sprint offered for large cable sizes. The omission of these data on large cable sizes likely creates a significant bias in Sprint's suggested cost results because the loadings that Sprint places on cable materials are unlikely to scale linearly with cable cross-section.

5 Sprint's advocacy in favor of unrepresentative input values was expressed even more directly in its ex parte submission of January 26, 1999 on Network Operations and Plant Specific Expense inputs. In this submission, Sprint stated:

> "Again, Sprint believes that incorporating RBOC data into the derivation of the FCC ranges understates the ratios for smaller carriers. Higher levels of customer density in the RBOC's bring about more efficient operations that cannot be duplicated by smaller carriers. Maintenance in Sprint's non-rural territories will naturally be higher than that of the RBOC's since our territories are more sparsely populated. *The intent of USF is to compensate high cost carriers, not RBOC's. Therefore, inputs should not be based on RBOC data.* These results again point to the importance of basing inputs on study area data." [emphasis added]

- Revising the feeder engineering of the SM to use "daisy chain" and pair-gain techniques to reduce the cost of small fiber DLC installations.
- Institute use of a copper T-1 distribution architecture (fed off of a larger fiber DLC feeder system) to serve remote customers.
- Investigate further the inputs costs associated with very small fiber equiped DLCs.
- Investigate the potential use of extended range cards in larger DLC remote terminals as a substitute for the placement of multiple small DLC remote terminals.

3.2 Copper Cable Costs

Cable cost loadings as submitted by Sprint in their February 8, 1999 are unreasonably high. A test for reasonableness for underground cable placing as follows:

Underground Cable

Labor cost adjusted to eliminate misc. mat'l.	$54.55 per hr.[6]
Number of placing technicians in crew	2 technicians[7]
Hours per technician per day	8 hrs/tech/day
Placing crew direct labor cost per day	$873
Placement[8]	$1,707,044
Total UG feet placed[9]	150,266 ft.
Average Placement Cost/ft.	$11.36 per ft.

UG cable placed per day ($873 / $11.36) = 77 ft. per day per 2-tech crew[10]
or 8 days to place a 600 ft. section
or 16 technicians to place in 1 day

This analysis shows this placing cost to be completely unreasonable. When underground copper is placed between two manholes, both manholes are opened up in the street. A drag line is placed in the conduit pipe, the cable reel is set above ground at the first manhole, the cable is fed through the opening of the first manhole and into the duct with the drag line. A pulling winch at the second manhole pulls the cable through the duct into the second manhole. This is a smooth, streamlined operation, that must be performed in one operation until it is finished. It is not feasible or accepted practice to leave the reel on the street, leave the manholes open, and go home for the night. Our engineering experience is that

---

6 Miscellaneous Material as percent of total miscellaneous material, plus placing labor, plus splicing labor is $307,041 / ($307,041 + $1,707,044 + $291,699) = 15.4%. Direct labor without miscellaneous is therefore 84.6% of the fully loaded labor rate of $64.45 utilized by Sprint in their Indoor SAI Cost Analysis, or $54.55 per hour.

7 Occasionally, for large cables, three person crews may be required.

8 Source: Sprint LTD Cable Costs by Category and Size, 2/8/99 Ex Parte Filing.

9 Source: Sprint LTD Cable Costs by Category and Size, 2/8/99 Ex Parte Filing.

10 If a three person crew is employed, the implied placing rate would be 115 feet per day.

all telephone companies expect to achieve copper feeder cable placement rates of approximately 5,000 feet per day with two to three person crews -- not 77 feet per day – which is not even fast enough to get between two manholes in one shift.

In any event, since more credible figures for copper cable placing costs have been provided by the HAI sponsors, the BCPM sponsors and Aliant, there appears to be no need to try to interpret and investigate the loading methodology that Sprint uses to raise its own proposed cost over these global estimates. In particular, it appears that Sprint may have double-counted certain labor and materials costs.

3.3 Mix of Distribution OSP Structure

Current SM input values contemplate the extensive use of underground OSP structure for loop distribution in suburban areas. This has a significant upwards effect on modeled costs because underground structure, with its conduit and manhole appurtenances, generally is more expensive than buried or aerial structure.

In non-urban areas, the use of underground plant generally is reserved crossing occasional obstacles such as railroad tracks and cross-roads, etc.[11] Appropriate application of "underground" plant placement costs should be well under the default percentages currently in the SM. In any event, the use of these occasional "underground" placements in distribution plant does not require the additive of manhole expense. Manholes, which are also sometimes called "splicing chambers," are employed only when conduit runs are so long as to require protected splices. Conduit runs of this length will not occur in appropriate use of "underground" plant in loop distribution.

3.4 Fill Factors

Due to the very large number of lines that the SM equips on DLC, it may be that the copper cable fill factors have been set too low.

3.5 Manhole Costs and Spacing

Manholes are very unusual in distribution plant. Where distribution cable is constructed out of sight, it is normally buried between pedestals that stick up above ground, normally to house the binding posts associated with drop terminals. Splices are normally contained within those very same drop terminal pedestals because they occur frequently to allow the customer drop to connect to distribution cable. For those occasions where a distribution backbone cable requires a splice, and there is no nearby drop terminal location available, then an empty pedestal is usually used to house the splice, rather than a manhole.

In the HAI Model, we have called for the use of a fiberglass reinforced resin pullbox to house slack fiber cable every 2,000 feet. It is appropriate to review why

---

[11] Indeed, Part 32 plant accounts do not even classify such intermittent use of conduit placement as true underground structure. Rather, if conduit is employed simply to bypass an obstacle and connect together otherwise unencumbered runs of aerial or buried plant, it is booked to the aerial or buried account. The correct accounting definition of underground plant is conduit placement *between manholes*.

manholes are required. Bellcore's Telecommunications Transmission Engineering book correctly reviews the manhole and distance between manholes issue on page 120, where it states, "Manholes are used for splicing." In fact, for a time in the 1970's, the manhole designation was changed to "Splicing Chamber". The above mentioned Bellcore source continues by stating, "The length of a conduit section [between manholes] is based on several factors, including the locations of intersecting conduits and manholes for ancillary equipment such as repeaters or loading coils [not applicable here], the lengths of cable reels [for fiber cable that is 35,000 ft. maximum], acceptable pulling tension [600 pounds for fiber cable], and physical obstructions. ... The ability to make long pulls is an important consideration in placing fiber cables because it allows the avoidance of splices. Fiber pulls of several thousand feet are routine.

If the use of handholes is deemed relevant for distribution cables, rather than keeping distribution cable splices dry in above ground pedestals, then the fiberglass reinforced resin splicing chamber we recommend for fiber slack storage should be quite adequate for such distribution backbone splices. Copies of literature from two vendors supplying such splicing chambers is included as an attachment to this filing. John Donovan, of our engineering team was given costs of less than $280 by the PenCell Corporation for their device.

3.6 Structure Sharing

Structure sharing is an engineering practice employed by economic firms seeking to extract maximum use and value from OSP structures than can support placements by multiple utilities. Its employment is determined both by the presence of other utilities having a need for OSP structure, as well as by the feasibility of making this structure available for multiple use by cooperating utilities.

It is well established that other utilities' need for OSP structures is pervasive across all areas. Electricity, CATV and municipal use are as common as telephone service – and they tend all to use the same rights of way. Thus, the major differentiator of OSP sharing is the feasibility of making structure available for multiple use. Aerial plant is the most feasible to share because multiple cables may be placed on a pole over time. Underground a close second is sharing feasibility – falling short of aerial only because its sharing capacity is limited by the extent to which multiple conduits or innerducts are placed at the time of installation. Buried structure has the least sharing feasibility simply because it requires simultaneous placement of the additional cables at time of initial installation.

Because the feasibility of underground sharing is superior to that of buried, it stands to reason that the SM should assume greater sharing of underground structure than buried structure. Its underground sharing fraction should be adjusted to display this relationship. Moreover, all of the SM's assumed sharing fractions should be adjusted to reflect the larger amounts of structure sharing that forward-looking competitive market and zoning forces will impose on utilities.

3.7 Annual Charge Factors for OSP Optimization

The annual charge factors (ACFs) used in the SM's OSP optimization routines are mis-specified. In particular, the return portion of the ACF appears to be set at the ILEC's assumed raw rate of return of 11.25%. This is incorrect. The correct return factor would gross up the equity portion of return for income taxes, and it would be adjusted and levelized to recognize that return is paid on average net investment – which depreciates from original gross plant down to zero over the economic life of the plant. Proper depreciation and return portions of these ACFs should be extracted from the SM's expense module.[12]

3.8 DLC Costs

These costs appear to be elevated. Several reasons are possible. One is that ILECs' embedded data do not contain purchases of newer, more efficient small DLC systems. Site preparation costs are also too high, see Attachment B.

4 Switching Input Values

The switching input values in the latest version of the SM have changed. In particular, these differ from earlier proposed values in that (appropriately) a single value is used to represent the per-line incremental cost of line terminations on hosts and remotes; but the "getting started" costs have risen dramatically for both types of switches – particularly remotes. This has caused significant elevation in switching investments. It is unclear as to the cause of this change.

5 Number of Lines on DLC

The SM appears to equip many more lines on DLC than do the HAI or BCPM models. While this could be the result of a reasonable optimization if the SM engineered DLC more inexpensively than the above models. But that does not appear generally to be the case. It may also be the result of overstated copper cable costs or understated copper fill factors.

---

[12] The newest SM expense modules permit development of regulatory depreciation on an equal life group basis in addition to square life; and permit recognition of the tax advantages offered by IRS-permitted accelerated depreciation.

Comparison of FCC Synthesis Model Investments to ARMIS Embedded Investments

	Cable and Wire			TPIS		
Company	Model:2410	ARMIS: 2410	% Change: Modeled vs. ARMIS	Model	ARMIS: 240	% Change: Modeled vs. ARMIS
Southern Bell-Fl	4,182,750	5,111,644	-18%	6,734,519	10,694,368	-37%
Southern Bell-Ga	3,120,401	3,569,473	-13%	4,985,646	8,039,089	-38%
South Central Bell-Al	2,214,564	1,730,266	**28%**	3,384,216	4,376,518	-23%
Southwestern Bell-Kansas	1,942,786	1,035,690	**88%**	2,662,931	2,248,555	**18%**
New England Tel-Maine	897,324	654,203	**37%**	1,239,844	1,346,444	-8%
South Central Bell-Mississippi	3,025,697	1,394,080	**117%**	3,966,417	2,892,048	**37%**
New England Tel-Vt	440,588	405,499	**9%**	632,753	779,138	-19%
Mountain Bell-Wyoming	498,633	351,163	**42%**	669,520	679,291	**-1%**
C And P Telephone Company Of Wa Dc	145,919	302,425	-52%	470,673	1,444,604	-67%

Alabama
South Central Bell-Al

Network Element	Synthesis Model Prior Version Investment (A)	Synthesis Model 030299 Version Investment (B)	Impact of Version Change (B/A)-1
NID	$ 55,196,223	$ 58,178,760	5%
Distribution (DLC)	1,181,477,095	1,777,423,701	50%
Distribution (non-DLC)	182,272,816	36,533,479	-80%
Distribution (all)	1,363,749,911	1,813,957,180	33%
Concentrator (DLC)	361,888,070	523,242,401	45%
Concentrator (non-DLC)	29,556,460	144,335	-100%
Concentrator (all)	391,444,530	523,386,735	34%
Feeder (DLC)	218,781,913	159,951,904	-27%
Feeder (non-DLC)	50,611,360	15,658,839	-69%
Feeder (all)	269,393,272	175,610,743	-35%
End Office Switching	229,323,597	270,072,156	18%
Signaling	18,912,464	19,637,359	4%
Dedicated Transport	36,298,619	84,688,890	133%
Dedicated Transport Transmission	22,639,576	24,363,679	8%
Direct Transport	25,327,582	60,519,685	139%
Direct Transport Transmission	11,227,468	11,346,241	1%
Common Transport	5,454,974	13,189,205	142%
Common Transport Transmission	2,151,783	2,059,252	-4%
Tandem Switching	8,818,631	9,019,753	2%
Operator Systems	10,160,818	13,413,019	32%
Public Telephone	-	-	0%
Total Investment	$ 2,450,099,449	$ 3,079,442,658	**26%**

Total Lines	1,969,732.00	1,969,732	0%
Lines On DLC	1,648,655	1,856,698	13%
% Lines on DLC	84%	94%	13%

Mississippi
South Central Bell-Mississippi

Network Element	Synthesis Model Prior Version Investment (A)	Synthesis Model 030299 Version Investment (B)	Impact of Version Change (B/A)-1
NID	$ 38,906,540	$ 41,008,861	5%
Distribution (DLC)	1,384,600,979	2,433,449,354	76%
Distribution (non-DLC)	296,489,651	56,764,138	-81%
Distribution (all)	1,681,090,631	2,490,213,492	48%
Concentrator (DLC)	260,665,714	422,267,497	62%
Concentrator (non-DLC)	35,458,355	146,547	-100%
Concentrator (all)	296,124,068	422,414,044	43%
Feeder (DLC)	272,503,178	226,560,952	-17%
Feeder (non-DLC)	82,842,244	30,140,007	-64%
Feeder (all)	355,345,422	256,700,959	-28%
End Office Switching	171,445,234	228,072,184	33%
Signaling	14,193,558	15,801,344	11%
Dedicated Transport	41,477,377	105,309,856	154%
Dedicated Transport Transmission	17,753,429	18,971,789	7%
Direct Transport	34,981,781	91,393,915	161%
Direct Transport Transmission	11,132,903	9,672,034	-13%
Common Transport	10,700,624	27,900,219	161%
Common Transport Transmission	3,182,297	2,351,978	-26%
Tandem Switching	6,916,877	7,119,383	3%
Operator Systems	9,807,311	16,111,688	64%
Public Telephone	-	-	0%
Total Investment	$ 2,693,058,054	$ 3,733,041,746	**39%**

Total Lines	1,333,422.00	1,333,422	0%
Lines On DLC	1,042,215	1,230,228	18%
% Lines on DLC	78%	92%	18%

Vermont
New England Tel-Vt

Network Element	Synthesis Model Prior Version Investment (A)	Synthesis Model 030299 Version Investment (B)	Impact of Version Change (B/A)-1
NID	$ 8,965,451	$ 9,449,901	5%
Distribution (DLC)	172,343,449	312,094,671	81%
Distribution (non-DLC)	141,532,542	18,133,046	-87%
Distribution (all)	313,875,991	330,227,717	5%
Concentrator (DLC)	46,167,056	95,847,866	108%
Concentrator (non-DLC)	18,316,313	88,403	-100%
Concentrator (all)	64,483,369	95,936,269	49%
Feeder (DLC)	31,879,184	30,011,726	-6%
Feeder (non-DLC)	18,976,128	3,159,221	-83%
Feeder (all)	50,855,312	33,170,947	-35%
End Office Switching	48,017,970	63,545,982	32%
Signaling	4,322,666	5,087,165	18%
Dedicated Transport	14,909,949	33,354,663	124%
Dedicated Transport Transmission	7,324,645	7,836,668	7%
Direct Transport	8,638,351	19,594,984	127%
Direct Transport Transmission	3,039,288	1,903,982	-37%
Common Transport	4,631,614	10,544,133	128%
Common Transport Transmission	1,578,785	845,258	-46%
Tandem Switching	1,828,016	1,967,238	8%
Operator Systems	4,760,144	6,433,836	35%
Public Telephone	-	-	0%
Total Investment	$ 537,231,551	$ 619,898,743	**15%**

Total Lines	349,646.00	349,646	0%
Lines On DLC	196,395	285,749	45%
% Lines on DLC	56%	82%	45%

Attachment A

Known to increase the value of lakeshore property

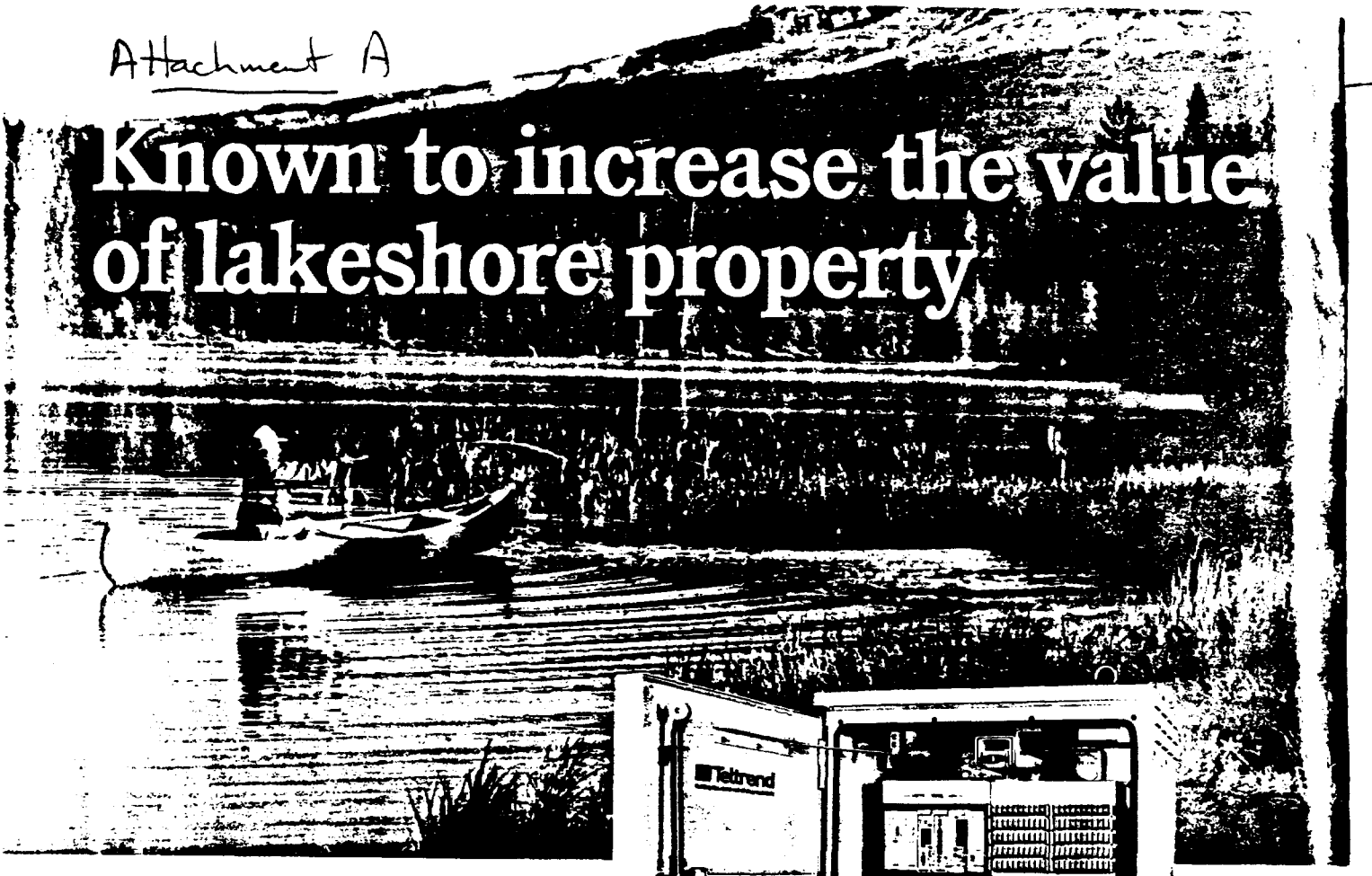

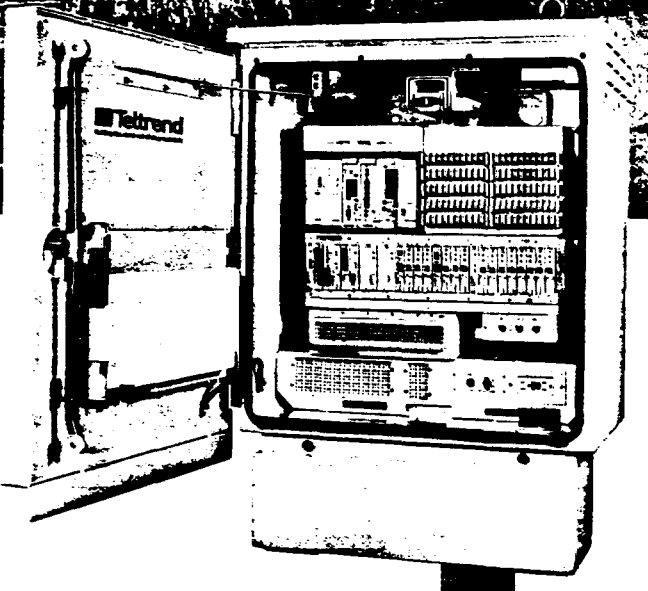

Teltrend's TLC™-48 is a general purpose small Digital Loop Carrier (DLC) system. This system supports POTS, and special services including DDS, ISDN and CLASS. The outdoor hardened remote cabinet can be pole mounted, is lightning protected, and includes a DS0 cross connect panel and battery back-up.

TLC-48 is ideal for situations where pair gain is needed to provide voice and data capability to an area that does not warrant a large DLC system. Vacation homes with expanding line requirements are one example of this.

The TLC-48 is your best solution for emerging low-density areas. It provides all the services you need today — and a clear migration path to services of the future. Call Teltrend today — we'll meet you at the lake!

Features:

- Integrated (TR-08) and Universal operation
- RT outdoor hardened cabinet
- Supports POTS, CLASS, ISDN and DDS
- 48 channel capacity
- 12:1 pair gain
- Copper fed, HDSL or T1
- Uses standard SLC-5 modules
- Lightning protected
- DS0 cross connect
- Battery back-up

Teltrend

Getting the most out of your network

1 800 TELTREN (1 800 835-8736) **www.teltrend.com**

In Canada, call True North Telecom, Inc. toll free at **1-800-658-7965**

Circle No. 2 on Reader Service Card

Attachment B

Large Digital Loop Carrier Site Preparation

1. Site Preparation
   a. Select site that is firm and level; or level the site, compact the soil, and construct of level base for the pad using a minimum of 6 inches of gravel.
   b. Conduit placement
      1) Dig three trenches, 24 inches deep for the electrical and telco cable conduits.
      2) Place conduits.
      3) Backfill and compact trenches.
      4) Place grounding system.
2. Place consumable template(s)
   a. Place the one-piece Litespan consumable template (frame) to which Plate1, Plate 2, and Plate 3 will be mounted.
   b. If an optional Evergood or Reltec AC power pedestal will be used, its template should be bolted to the Litespan template.
3. Place Concrete Form
   a. Build a concrete form with inside dimensions of 228" (19') by 176½" (14' 8½") out of 2" x 6" boards.
   b. Ensure form is level, and ¼" below top of templates (to ensure proper drainage).
4. Pour Concrete
   a. Place concrete reinforcement bars.
   b. Pour concrete.
   c. Work concrete around ducts and under templates.
   d. Finish to a smooth surface.

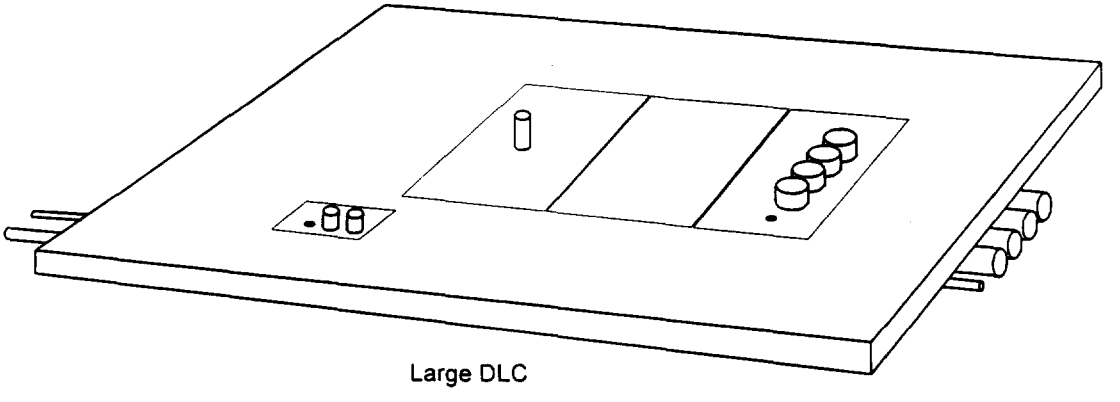

Large DLC

Large Digital Loop Carrier Site

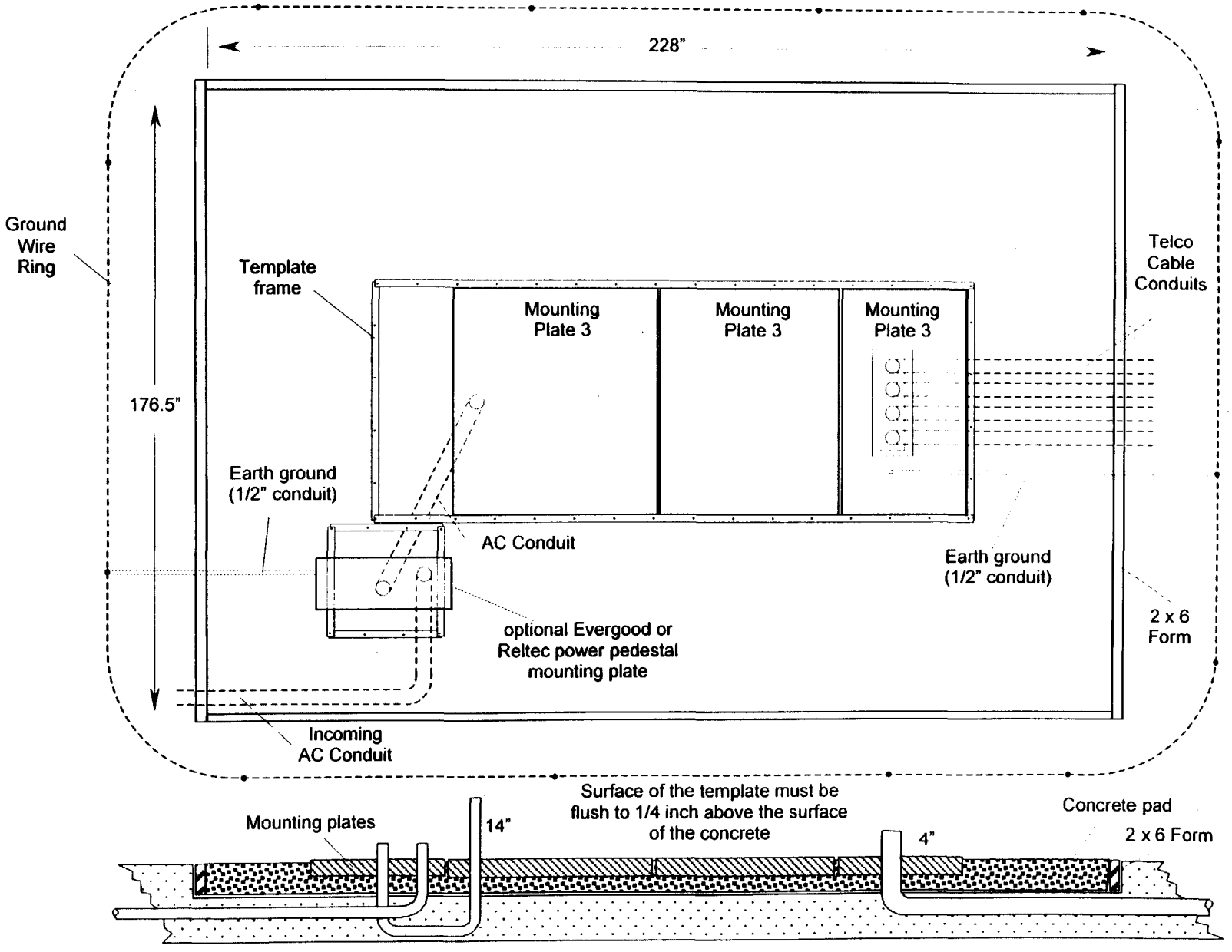

$37.50

1997

NATIONAL CONSTRUCTION ESTIMATOR

45th Edition

Includes inside the back cover:
Two 3½" disks with all the cost estimates in the book plus an estimating program for *Windows*™.

Edited by
Martin D. Kiley
and
Marques Allyn

Craftsman Book Company
6058 Corte del Cedro / P.O. Box 6500 / Carlsbad, CA 92018

	Craft@Hrs	Unit	Material	Labor	Equipment	Total
Concrete Slab-on-Grade Assemblies. Typical costs including fine grading, edge forms, 3,000 PSI concrete, wire mesh, finishing and curing.						
4" thick 4' x 6' equipment pad						
Hand trimming and shaping, 24 SF	CL@.512	LS	--	15.70	--	15.70
Lay out, set and strip edge forms, 20 LF, 1 use	C8@1.30	LS	18.40	48.40	.93	67.73
Place W2.9 x W2.9 x 6" x 6' mesh, 24 SF	RB@.097	LS	5.04	3.93	--	8.97
Place ready-mix concrete, from chute 3 CY at $61.00 per CY (see note below)	CL@.127	LS	18.30	4.71	.29	23.30
Finish concrete, broom finish	CM@.591	LS	--	22.40	8.61	31.01
Cure concrete, curing paper	CL@.124	LS	1.00	3.79	--	4.79
Total job cost for 4" thick 24 SF pad	**--@2.75**	**LS**	**42.74**	**98.93**	**9.83**	**151.50**
Cost per SF for 4" thick 24 SF pad	--@.115	SF	1.78	4.12	.41	6.31
Cost per CY of 4" thick concrete, .3 CY job	--@9.17	CY	142.46	329.77	32.77	505.00
8" thick 10' x 10' equipment pad						
Hand trimming and shaping, 100 SF	CL@2.79	LS	--	85.40	--	85.40
Lay out, set and strip edge forms, 40 LF, 5 uses	C8@3.28	LS	16.00	122.00	2.31	140.31
Place W2.9 x W2.9 x 6" x 6" mesh, 100 SF	RB@.405	LS	21.00	16.40	--	37.40
Place ready-mix concrete, from chute 2.5 CY at $61.00 per CY (see note below)	CL@1.08	LS	152.50	33.00	2.45	187.95
Finish concrete, broom finish	CM@2.11	LS	--	80.10	31.30	111.40
Cure concrete, curing paper	CL@.515	LS	4.00	15.80	--	19.80
Total job cost for 8" thick 100 SF pad	**--@10.2**	**LS**	**193.50**	**352.70**	**36.06**	**582.26**
Cost per SF for 8" thick 100 SF job	--@.102	SF	1.93	3.53	.36	5.82
Cost per CY of 8" thick concrete, 2.5 CY job	--@4.08	CY	77.40	141.08	14.42	232.90
Note: Ready-mix concrete unit price at $61.00 per CY, used in both examples, assumes a minimum of 10 cubic yards (CY) will be delivered (per load) with the excess used elsewhere on the same job.						
Add for each CY less than 10 delivered	--	CY	10.00	--	--	10.00

Floor Slab Assemblies. Typical reinforced concrete slab-on-grade including excavation, gravel fill, forms, vapor barrier, wire mesh, 3000 PSI concrete at $61.00 per CY, finishing and curing.

Based on 100' x 75' slab (7,500 SF)						
4" thick slab	--@.024	SF	1.43	.87	.16	2.46
5" thick slab	--@.025	SF	1.62	.91	.16	2.69
6" thick slab	--@.026	SF	1.81	.95	.16	2.92
Detailed cost breakdown slab as described above:						
4" thick 100' x 75' slab						
Grade sandy loam site using a D-4 tractor (at $41.40 per hour), 140 CY, balanced job, (no import or export)	S1@2.66	LS	--	94.20	55.00	149.20
Buy and spread 6" crushed rock base using a D-4 tractor, 140 CY at $18.20 per CY	S1@15.8	LS	2,548.00	559.00	327.00	3,434.00
Lay out, set and strip edge forms, 350 LF, 5 uses	C8@19.6	LS	175.00	730.00	--	905.00
Place .006" polyethylene vapor barrier 7,500 SF	CL@8.84	LS	300.00	271.00	--	571.00
Place W2.9 x W2.9 x 6" x 6" mesh, 7,500 SF	RB@30.5	LS	1,575.00	1,240.00	--	2,815.00
Place and remove 2" x 2" keyway, 200 LF, 1 use	C8@4.61	LS	63.00	172.00	--	235.00
Place 4" concrete, 93 CY, from chute	CL@39.9	LS	5,673.00	1,220.00	90.80	6,983.80

	Craft@Hrs	Unit	Material	Labor	Total
Typical installed costs for chemical resistant brick or tile (acid-proof brick), installed					
Less complex jobs	--	SF	--	--	22.00
More complex jobs	--	SF	--	--	27.00
Minimum job cost	--	LS	--	--	9,000.00
Quarry Tile. Unglazed natural red tile set in a portland cement bed with mortar joints					
Quarry floor tile					
4" x 4" x 1/2", 1/8" straight joints	M1@.112	SF	2.80	3.78	6.58
6" x 6" x 1/2", 1/4" straight joints	M1@.101	SF	2.65	3.41	6.06
6" x 6" x 3/4", 1/4" straight joints	M1@.105	SF	3.45	3.54	6.99
8" x 8" x 3/4", 3/8" straight joints	M1@.095	SF	3.25	3.21	6.46
8" x 8" x 1/2", 1/4" hexagon joints	M1@.112	SF	3.70	3.78	7.48
Quarry wall tile					
4" x 4" x 1/2", 1/8" straight joints	M1@.125	SF	2.80	4.22	7.02
6" x 6" x 3/4", 1/4" straight joints	M1@.122	SF	3.45	4.12	7.57
Quarry tile stair treads					
6" x 6" x 3/4", 12" wide tread	M1@.122	LF	3.80	4.12	7.92
Quarry tile window sill					
6" x 6" x 3/4" tile on 6" wide sill	M1@.078	LF	3.65	2.63	6.28
Quarry tile trim or cove base					
5" x 6" x 1/2" straight top	M1@.083	LF	2.80	2.80	5.60
6" x 6" x 3/4" round top	M1@.087	LF	3.25	2.94	6.19
Deduct for tile set in epoxy bed without grout joints	--	SF	--	-1.87	-1.87
Add for tile set in epoxy bed with grout joints	--	SF	1.10	--	1.10
Pavers and Floor Tile					
Brick, excluding platform cost					
Plate, glazed	M1@.114	SF	2.30	3.85	6.15
Laid in sand	M1@.089	SF	1.75	3.00	4.75
Pavers, on concrete, grouted	M1@.107	SF	3.10	3.61	6.71
Add for special patterns	--	%	25.0	35.0	60.0
Slate	M1@.099	SF	2.70	3.34	6.04
Terrazzo tiles, 1/4" thick					
Standard	M1@.078	SF	4.35	2.63	6.98
Granite	M1@.085	SF	7.10	2.87	9.97
Brick steps	M1@.186	SF	2.75	6.28	9.03
Interlocking Paving Stones. These costs include fine sand to fill joints and machine vibration, but no excavation.					
Interlocking pavers, rectangular, 60mm thick	M1@.083	SF	1.20	2.80	4.00
Interlocking pavers, hexagonal, 80mm thick	M1@.085	SF	1.46	2.87	4.33
Interlocking pavers, multi-angle, 80mm thick	M1@.081	SF	1.25	2.73	3.98
Concrete masonry grid pavers (erosion control)	M1@.061	SF	2.09	2.06	4.15
Add for a 1" sand cushion	M1@.001	SF	.12	.03	.15
Add for a 2" sand cushion	M1@.002	SF	.17	.07	.24
Deduct for over 5,000 SF	--	%	-3.0	-7.0	-10.0
Concrete Block Wall Assemblies. Typical costs for standard natural gray medium weight masonry block walls including blocks, mortar, typical reinforcing and normal waste. Foundations are not included.					
Walls constructed with 8" x 16" blocks laid in running bond					
4" thick wall	M1@.090	SF	.99	3.04	4.03
6" thick wall	M1@.100	SF	1.18	3.38	4.56
8" thick wall	M1@.120	SF	1.43	4.05	5.48
12" thick wall	M1@.150	SF	2.10	5.06	7.16

PenCell

Type PEM-2436 • Buried Cable Enclosure

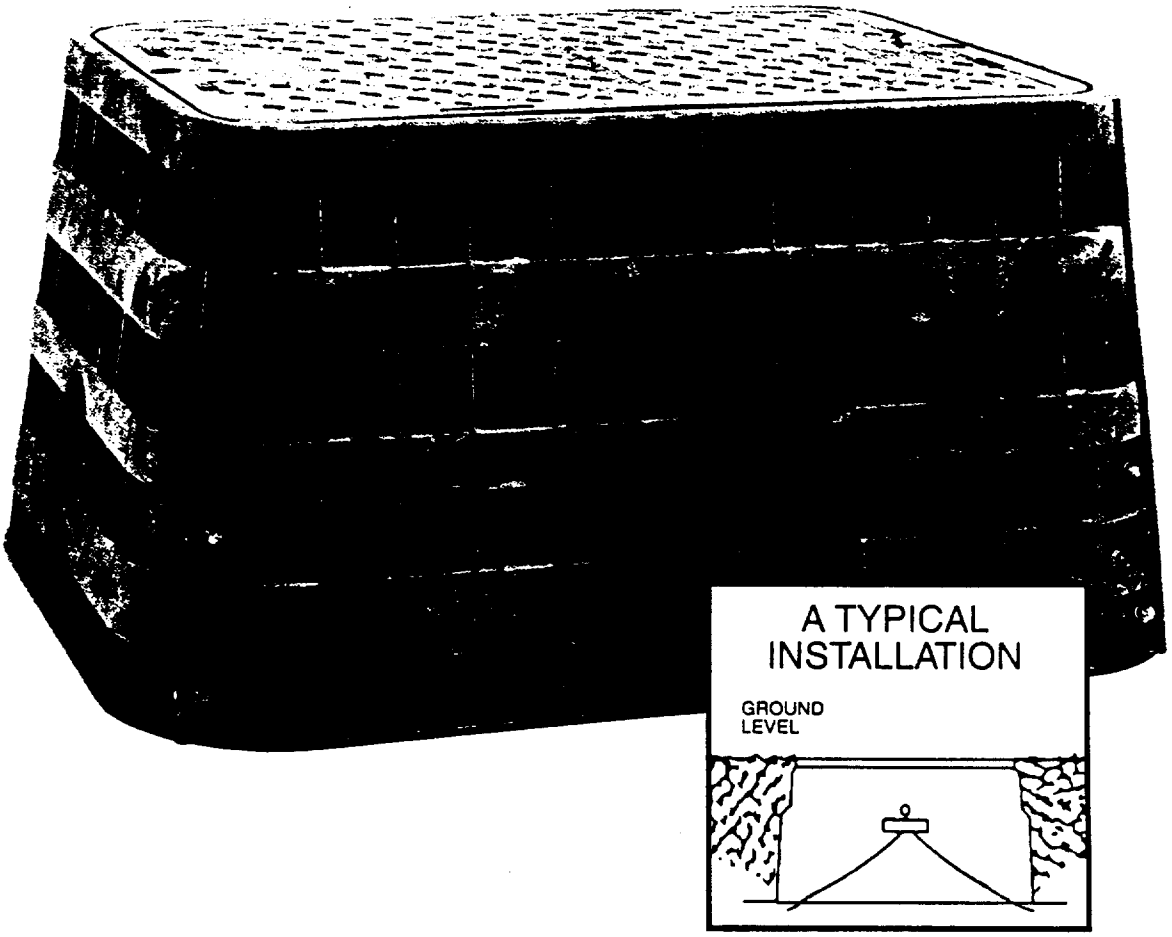

- Molded in identification of ELECTRIC, CATV, TELEPHONE or IRRIGATION.
- Box & lid made of strong, high density polyethylene structural foam.
- All stainless steel hardware, including captive bolts.
- Unit has large working area. Top opening 2 ft. x 3 ft.
- Rigid enclosure and cover weigh only 100 pounds.
- Stackable for easy handling.

PenCell PLASTICS, INC.
P.O. Box 309
New Egypt, N.J. 08533-0309
(800) 257-9448 • (609) 758-3201 • Fax: (609) 758-7945

PEM-2436

Grade Level Buried Cable Enclosure

Rectangular shape of this enclosure provides maximum usable working area. The unit is designed to accept the new larger splice enclosures. The unit is molded of a high density polyethylene, which has excellent environmental resistance. Reinforcing ribs are designed into the enclosure to withstand backfill operations. Flange around base prevents frost heaving or tilting. This strong but lightweight unit can be handled by one or two people. This results in a considerable savings in installation labor over concrete vaults. Handling equipment is eliminated and allows easy delivery to the construction site. Units come fully assembled and can be nested for a minimum amount of warehouse storage space. The cover is secured to the base with two captive bolts. Units are offered in green molded-in color. Units are shipped palletized for easy handling and storage.Optional split lid is also available for the top. Additional logos are available upon request.

To order specify:

PEM-2436	— Enclosure with plastic cover.
Identification:	(ELECTRIC, CATV, TELEPHONE, IRRIGATION)
Standard:	— (H) Hex Head Bolts.
Options:	— (X) 3/8 - 16 Penta Head Bolts.
	— (B) Button Head Bolts.
	— (SPLIT) 2 Piece Lid.
Example:	— PEM-2436H Enclosure with S/S hex head bolts.

Test Results

Verticle load on 10x10 center of lid.
5000 Lbs.
No Breakage.

Recommendations on the application of our products are based on the best available technical data and are offered as a suggestion only. Each user of the material should make his own tests to determine the material's suitability for his own particular use.

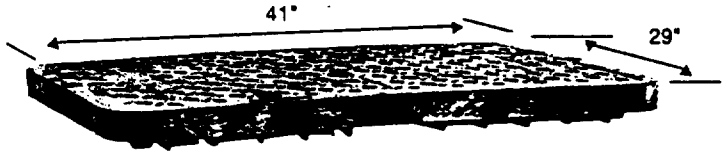

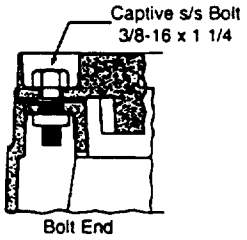

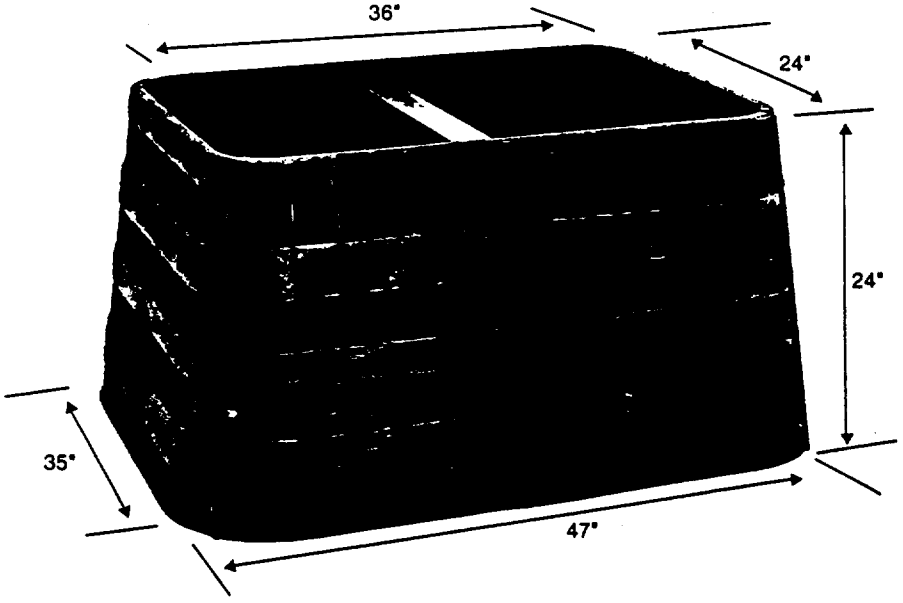

PenCell PLASTICS, INC.
P.O. Box 309
New Egypt, N.J. 08533-0309
(800) 257-9448 • (609) 758-3201 • Fax: (609) 758-7945

Description

Using the fiberglass mounting sleeve as an alternative to a concrete pad for passive systems, the provider can save on initial installation costs and defer costs of cabinets and associated equipment.

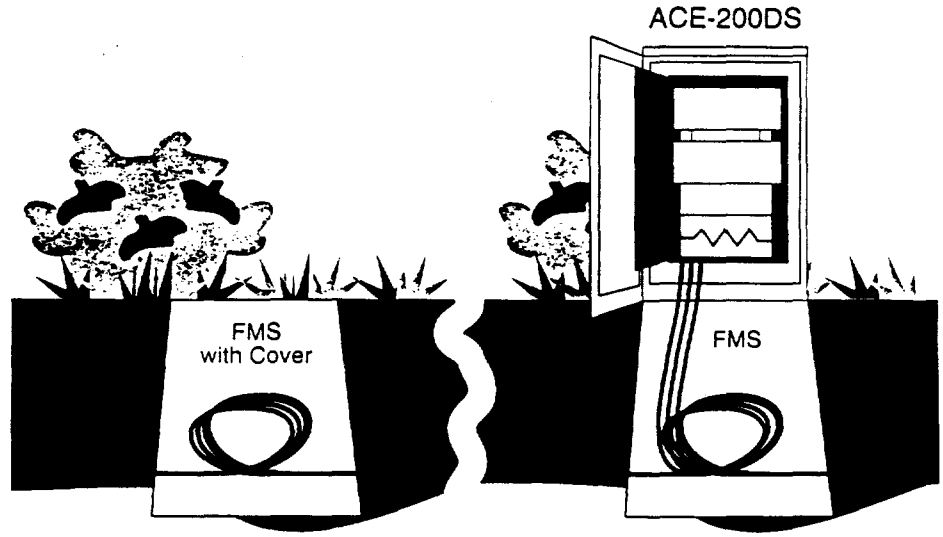

Deploy the fiberglass mounting sleeve in the construction phase at designated future cabinet locations, coil up slack fiber cable and place a cover on the sleeve.

Once the projected growth occurs, remove the cover and install the adapter plate and cabinet.

ADC's fiberglass mounting sleeve system (FMS) provides for storage, splicing, protection and security of cables. The FMS can be utilized to house 50-60 feet (15.25 to 18.3 m) of cable and supply sufficient area for splicing of fibers. As the network is planned and fiber is deployed for current and future use, the FMS can be installed with a cover in an area where growth is anticipated. The FMS can be used to store cables until growth necessitates the installation of a cabinet. When the anticipated growth occurs, simply replace the cover with an adapter plate and mount the cabinet to the FMS. The FMS accommodates any of ADC's outside plant enclosures.

Ordering Examples

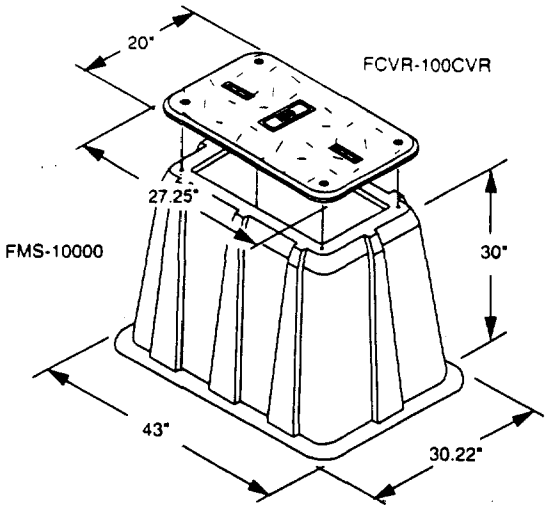

FMS-10000

Small Mounting Sleeve Only

For Handhole or Future Cabinet Installation – Order:
(1) FMS-10000 sleeve
(1) FCVR-100CVR cover

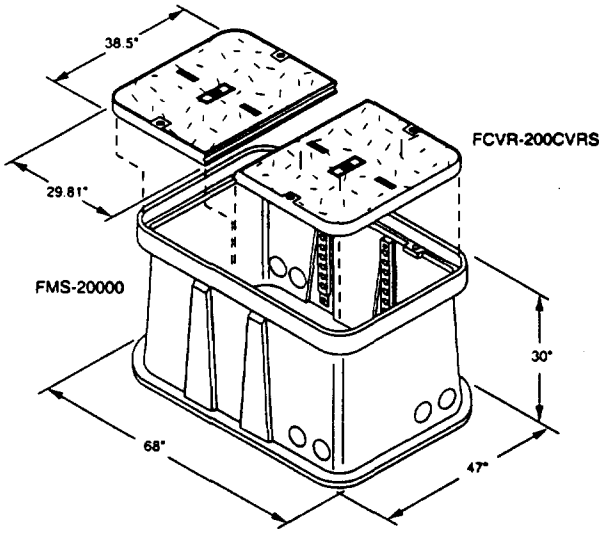

FMS-20000

Medium Mounting Sleeve Only

For Handhole or Future Cabinet Installation – Order:
(1) FMS-20000 sleeve
(1) FCVR-200CVRS cover (2 halves)

ST Pedestal Splice Closures and Reentry Kits

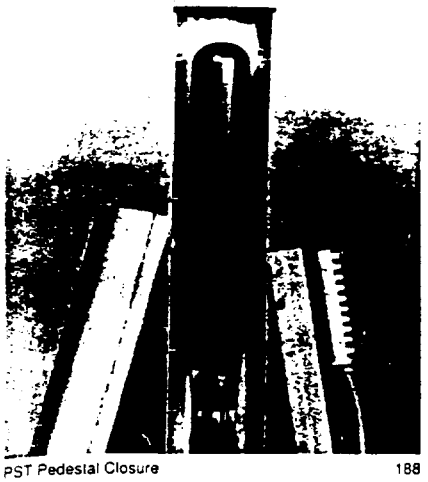

PST Pedestal Closure 188

PST (Pull 'N' Shrink Tubing) Pedestal Splice Closures and Reentry Kits give ultimate protection to splices. The kits provide protection from the harmful effects of moisture and ultraviolet light, as well as increased security from vandalism.

The pedestal splice closure forms a reusable closure body around the copper network–without requiring special tools or flame for installation.

The splice is enclosed in a polyethylene dome, and then an ethylene propylene tube (PST) is slipped over the enclosure joint and onto a sealing collar. Pulling a plastic rip cord on the PST allows it to shrink back to the minimum outside diameter necessary to form a tight seal. The flexible tubing material conforms to the shape of the joint, sealing out both air and water.

The kit is available in five sizes from 76.2 mm to 203.2 mm (3" to 8") in diameter to fit a full range of above ground pedestals.

Product Referral Generator

Compounds/Encapsulants	pg. 82
Shield Bonding	pg. 122
Cable Cleaning	pg. 120
Scotchlok™ Connectors	pg. 2
MS²™ Modules	pg. 6
Tapes	pg. 108
Sheath Scuff	pg. 121
Pair Saver	pg. 121
E-Z Wrap	pg. 108
Cable Ties	pg. 129

Specifications for PST Pedestal Closure Kits

	4634	4635	4636	4636XL	4637XL
Closure outside dimension W x D mm (in.)	70 x 64 (2.8 x 2.5)	121 x 94 (4.8 x 3.7)	159 x 132 (6.3 x 5.2)	159x 132 (6.3 x 5.2)	210 X 191 (8.3 X 7.5)
Closure height (H) mm (in.)	356 (14) 457 (18)	457 (18)	457 (18)	711 (28)	711 (28)
Approx. bundle diameter mm (in.)	57 (2.3)	102 (4)	137 (5.4)	140 (5.5)	191 (7.5)
*Approx. splice range	100 pr.-MS² 50 pr.-UR2	300 pr.-MS² 100 pr.-UR2	600 pr.-MS² 300 pr.-UR2	900 pr.-MS² 400 pr.-UR2	1200 pr.-MS²
Ordering information					
Packaging kg (lbs.)	1/bag 10/cs. 9.6 (21.2)	1/bag 10/cs. 13.1 (28.8)	1/bag 5/cs. 10.8 (23.7)	1/bag 5/cs. 10.8 (23.7)	1/bag 1/cs. 6.4 (14.0)
Minimum order	10 kits [525412]	10 kits [525413]	5 kits	5 kits [520987]	1 kit [319706]
UPC	054007-17493	054007-17494	054007-17653	054007-71574	054007-71532

*NOTE: Based on 2 bank MS² 4000-DWP Modules and Scotchlok Connectors installed per 3M practices. Examples: 100-pair means 100-pair In and 100-pair Out or 100 pair straight splice.
RUS Listed

Kit components included: Closure, Foil Bag, Desiccant Bag, Ground Wires, PST, Sheath Scuff, 2900-R Sealing Collar Tape.

Additional products needed: Scotch™ 88T 38 mm (1-1/2") Wide Vinyl Tape, Scotchlok 4460 Series Shield Bond Connectors, Terminal Block, Scotchlok or MS² Splice Connectors, 2183 E-Z Wrap.

Ordering Information for Accessories

Product number	Size mm (in.)	Packaging kg (lbs.)	Minimum order	UPC
4634-R PST Pedestal Splice Closure Reentry Kit	76.2 (3.0)	1/box, 10/cs., 3.4 (7.6)	10 kits [525418]	054007-17480
4635-R PST Pedestal Splice Closure Reentry Kit	114.3 (4.5)	1/box, 10/cs., 5.4 (12.1)	10 kits [525419]	054007-17481
4636-R PST Pedestal Splice Closure Reentry Kit	152.4 (6.0)	1/bag, 5/cs., 4.5 (9.95)	5 kits [525420]	054007-17654
2900-R Sealing Collar Tape	38 x 1.5 m (1.5 x 5')	5/box 50/cs.,14.4 (31.9)	50 rolls [526082]	054007-68546
4637-R PST Pedestal Splice Closure Reentry Kit	–	5/cs., 10.1 (22.4)	5 kits [338364]	054007-71534