EX PARTE OR LATE FILED

wallmank@wallman.com
555 12th Street NW
Suite 321
Washington, DC 20004

WALLMAN STRATEGIC CONSULTING, LLC

Phone: 202.347.4964
Fax: 202.347.4961

RECEIVED
MAR 1 7 1999
FEDERAL COMMUNICATIONS COMMISSION
OFFICE OF THE SECRETARY

Kathleen M.H.Wallman

RECEIVED
MAR 1 7 1999
Federal Communications Commission
Office of Secretary

March 17, 1999

Magalie Roman Salas
Secretary
Federal Communications Commission
445 12th Street, SW
Washington, D.C. 20554

Re: *Ex parte* presentations
CC Docket 98-184
CC Docket 98-56
CC Docket 96-98

Dear Ms. Salas:

On March 16, 1999, Greg Bradon, Vice President, MediaOne Group, Susan Eid, Vice President, MediaOne Group, and I met with Larry Strickling, Chief, Common Carrier Bureau, Robert Atkinson, Deputy Chief, Common Carrier Bureau, Anna Gomez, Chief, Network Services Division, and Jordan Goldstein, Common Carrier Bureau. In our discussion, we related the efforts of MediaOne to provide telephone service and the barriers it had encountered. Enclosed is a presentation that outlines the parameters of the discussion.

Enclosed are the necessary copies of this letter, with attachments.

Sincerely,

Kathleen M.H. Wallman

Kathleen M.H.Wallman

Enclosures
Copies, w/o attachments to: Mr. Strickling, Mr. Atkinson, Ms. Gomez, and Mr. Goldstein

No. of Copies rec'd 0+5
List ABCDE

MediaOne®

This is Broadband. This is the way.

Agenda

- Who We Are
- How We Provide Our Services: Our Hybrid Fiber Coax Network
- Our Digital Telephone Services
- What We Need From Incumbent Local Exchange Carriers
- Summary

Who We Are

MediaOne's Domestic Broadband Service Areas

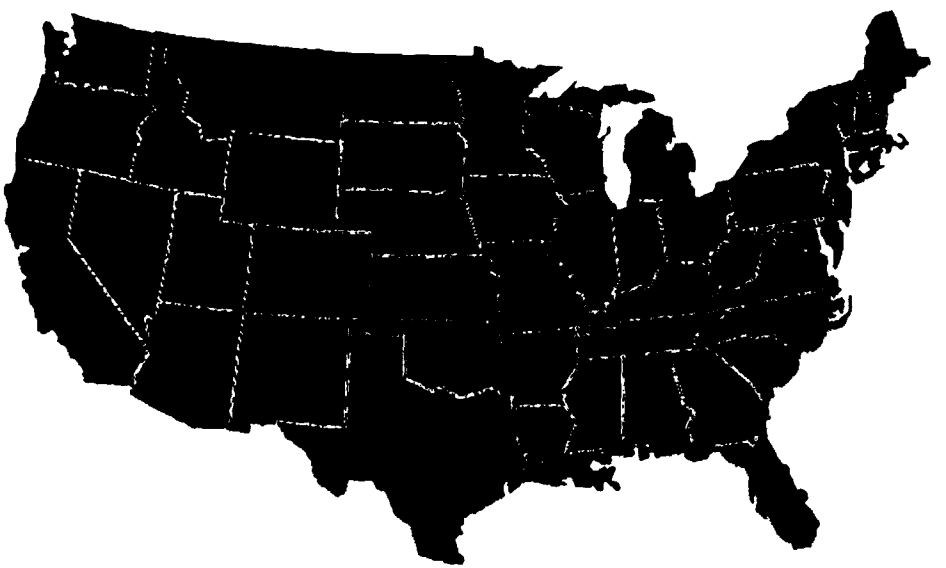

- MediaOne is the 3rd largest broadband company in the United States:
  - 8.5 million homes passed
  - 5.0 million cable customers
  - 90% of customers in clusters of 100,000 or more
  - 8 markets with more than 200,000 customers

MediaOne Digital Telephone Services

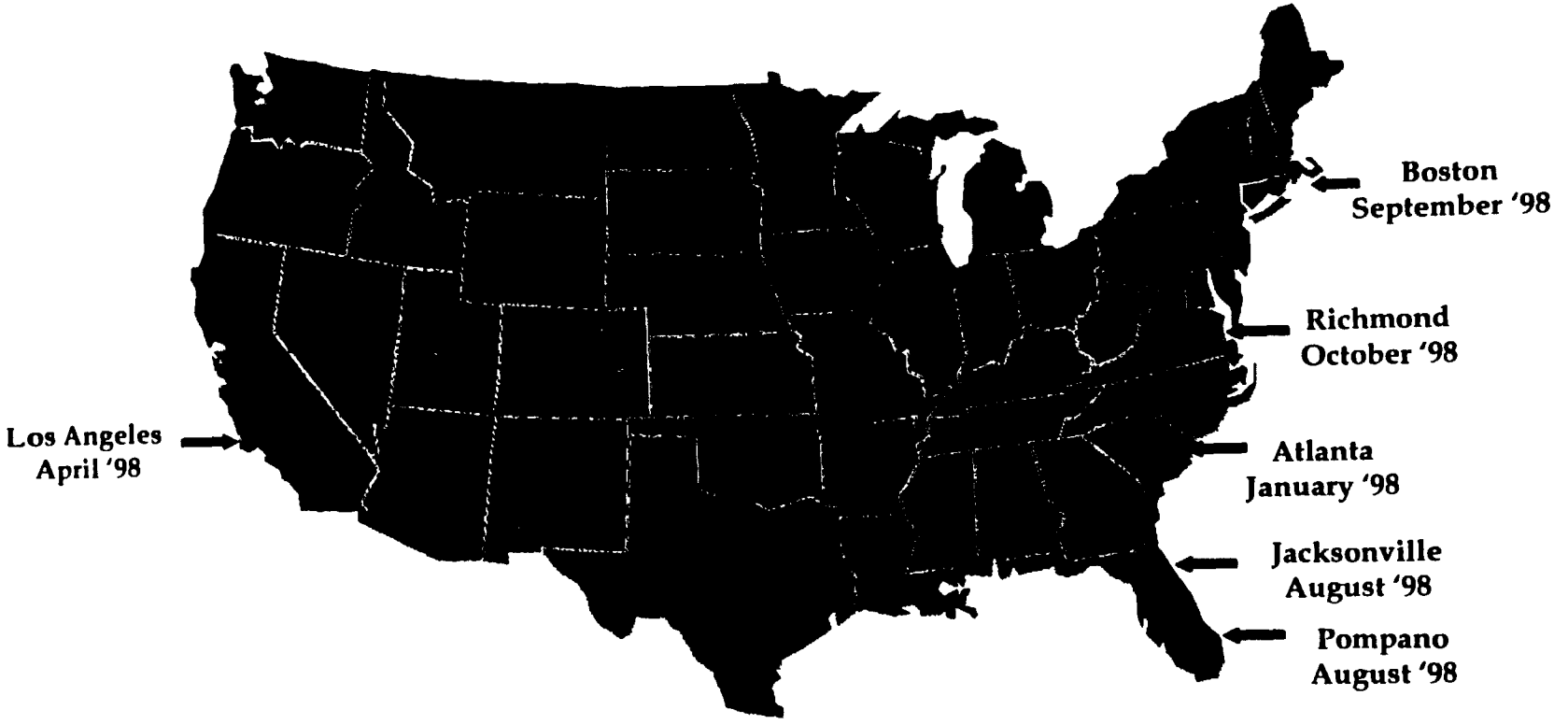

To date, MediaOne has launched facilities-based local telephone service to residential consumers in six markets: Atlanta, Los Angeles, Jacksonville, Pompano, Boston, and Richmond. More markets to come.

How We Provide Our Services: Our Hybrid Fiber Coax Network

Traditional Tree-and-Branch CATV Architecture

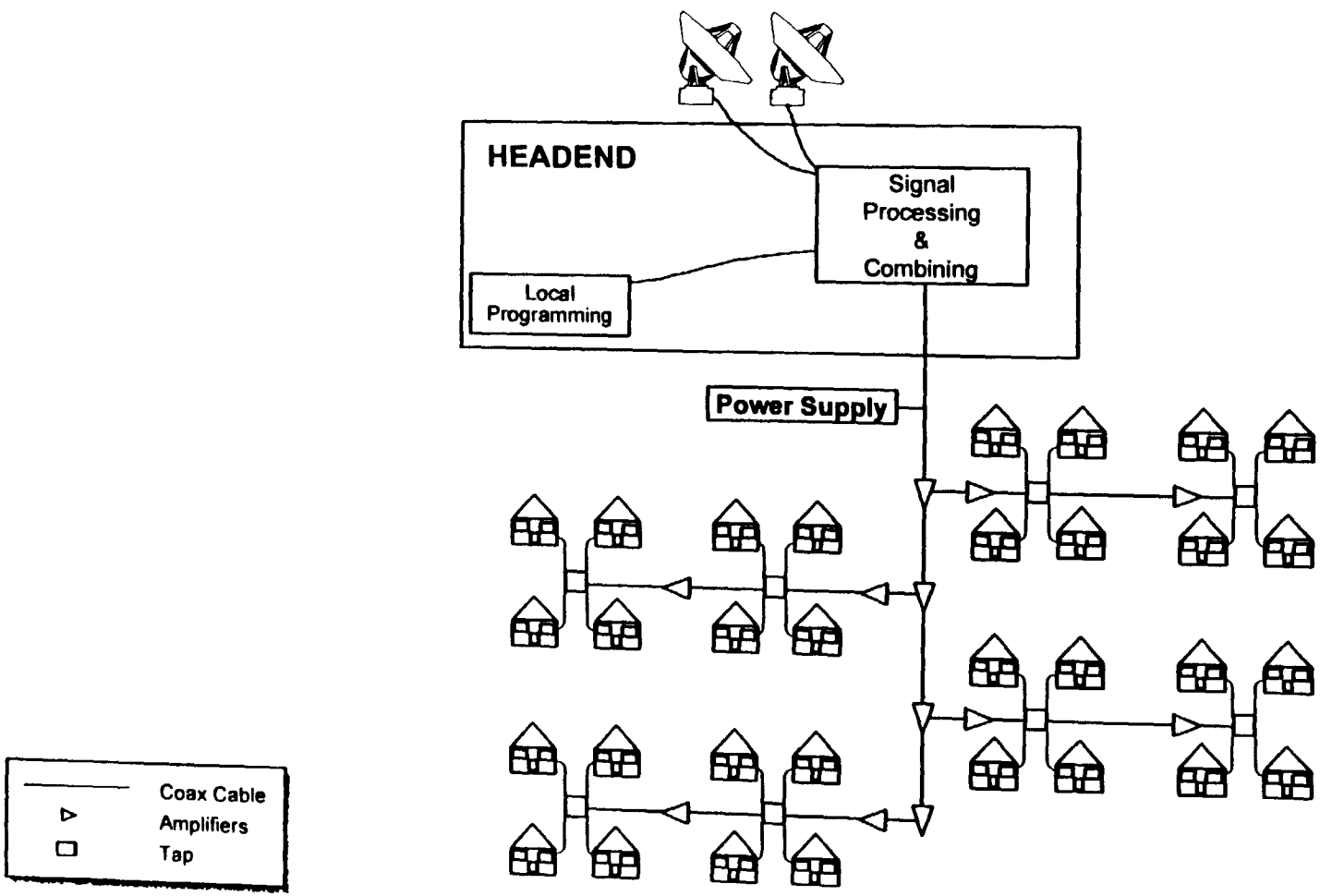

Upgrading the CATV Network

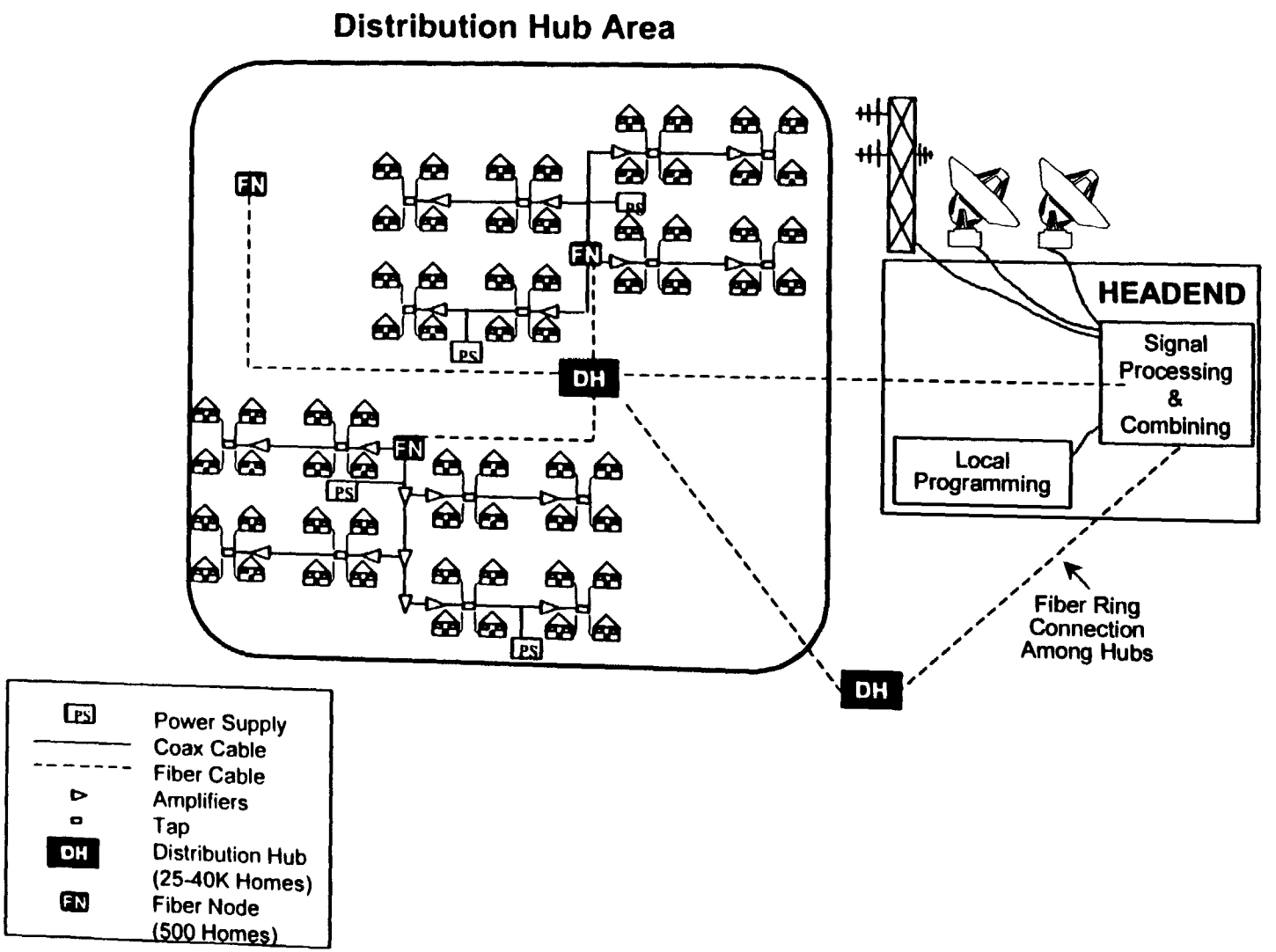

Upgrading the CATV Network
– The Basic Network –

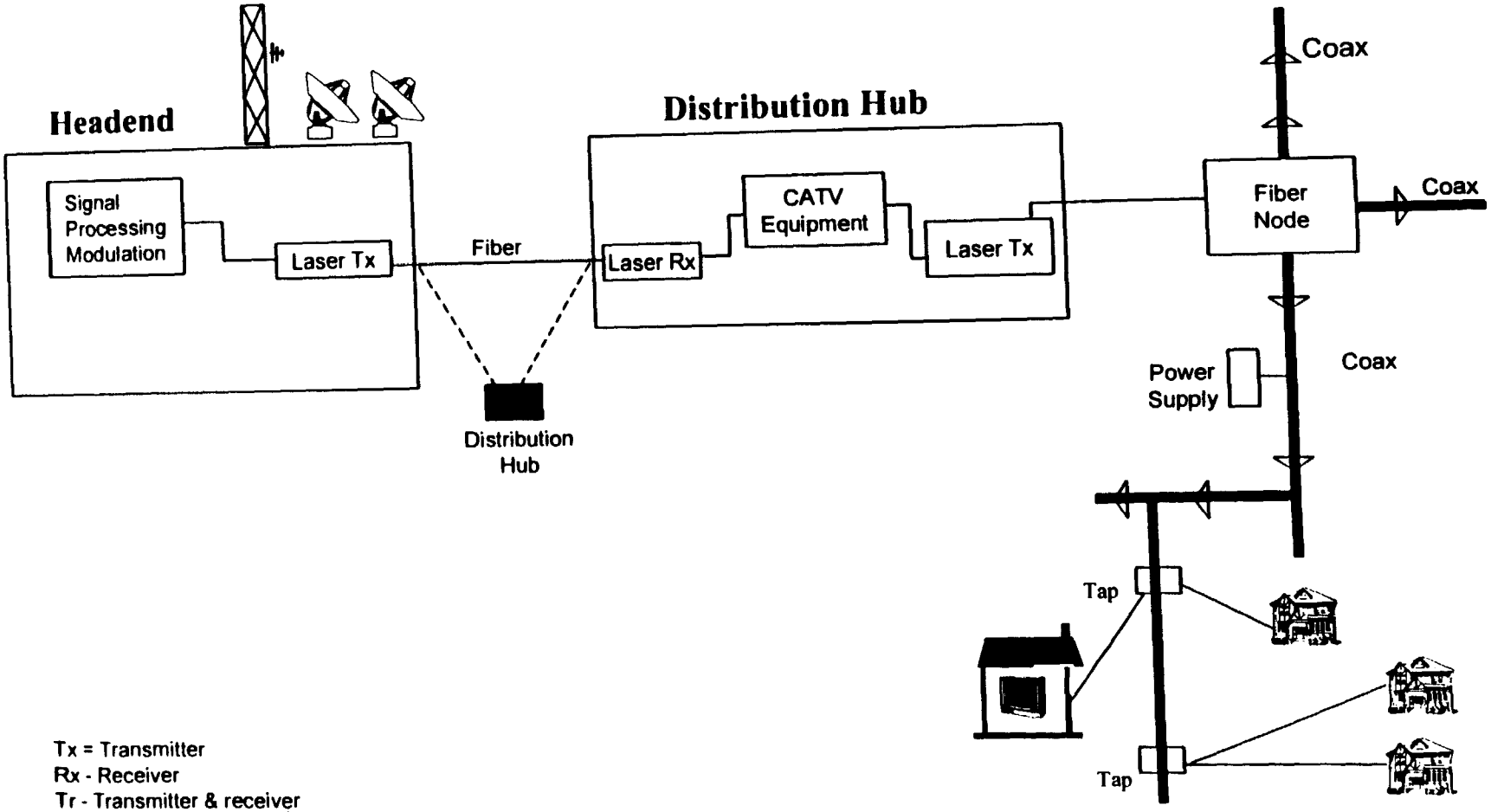

Tx = Transmitter
Rx - Receiver
Tr - Transmitter & receiver

Broadband Network Architecture Supporting Video and Telephony

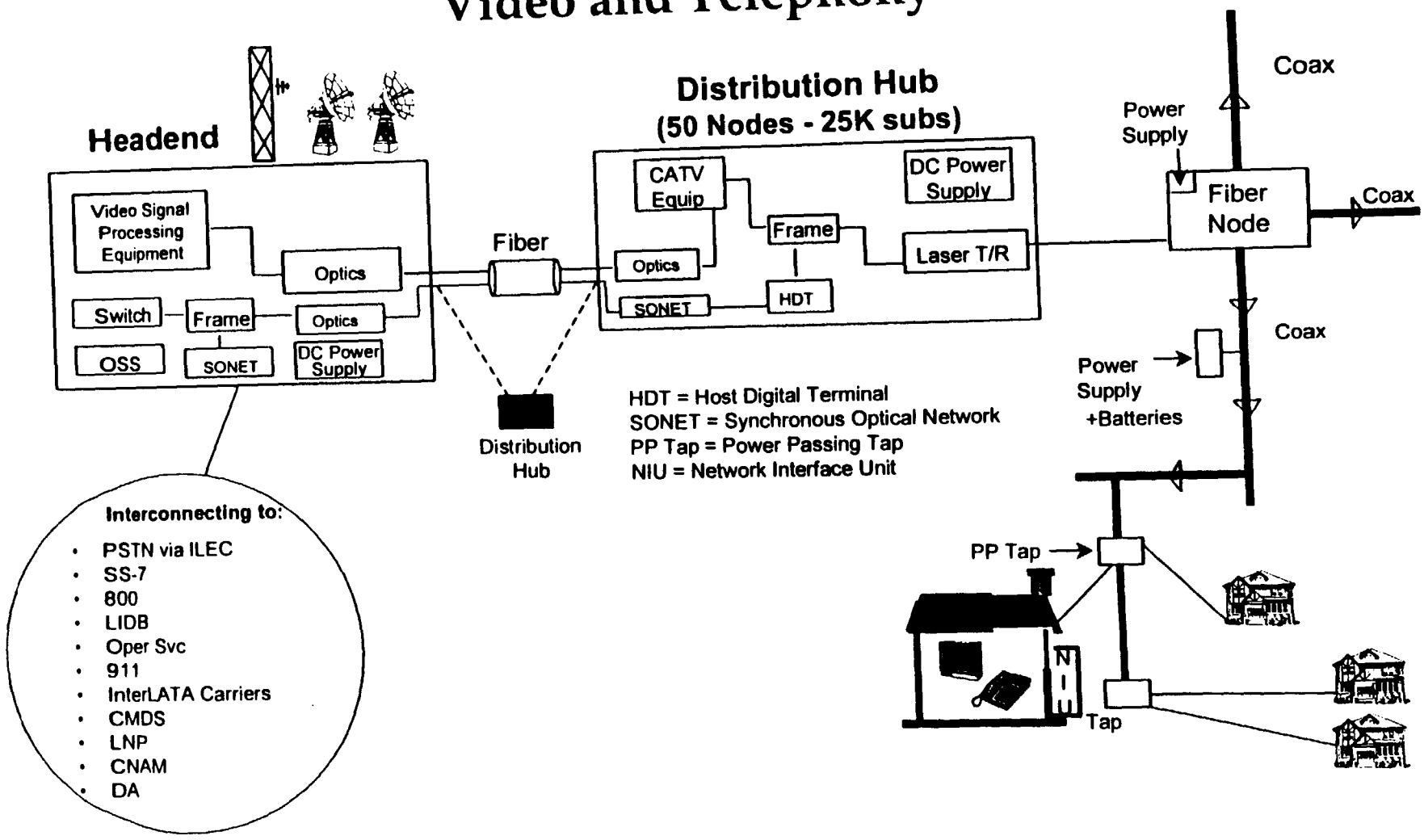

Broadband Network Architecture Supporting Video, Telephony and High Speed Data Service

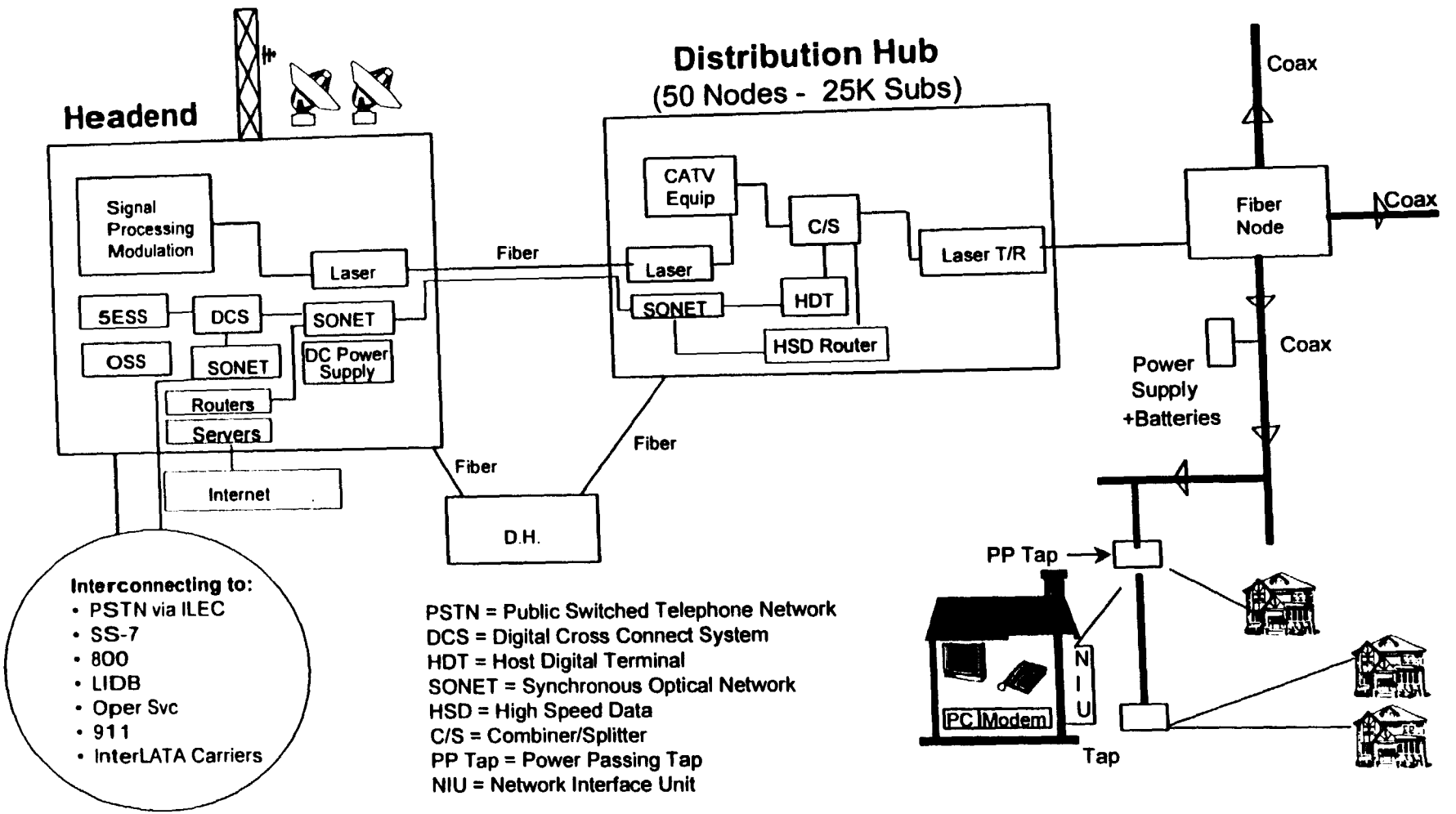

Subscriber Premises

– Traditional Services –

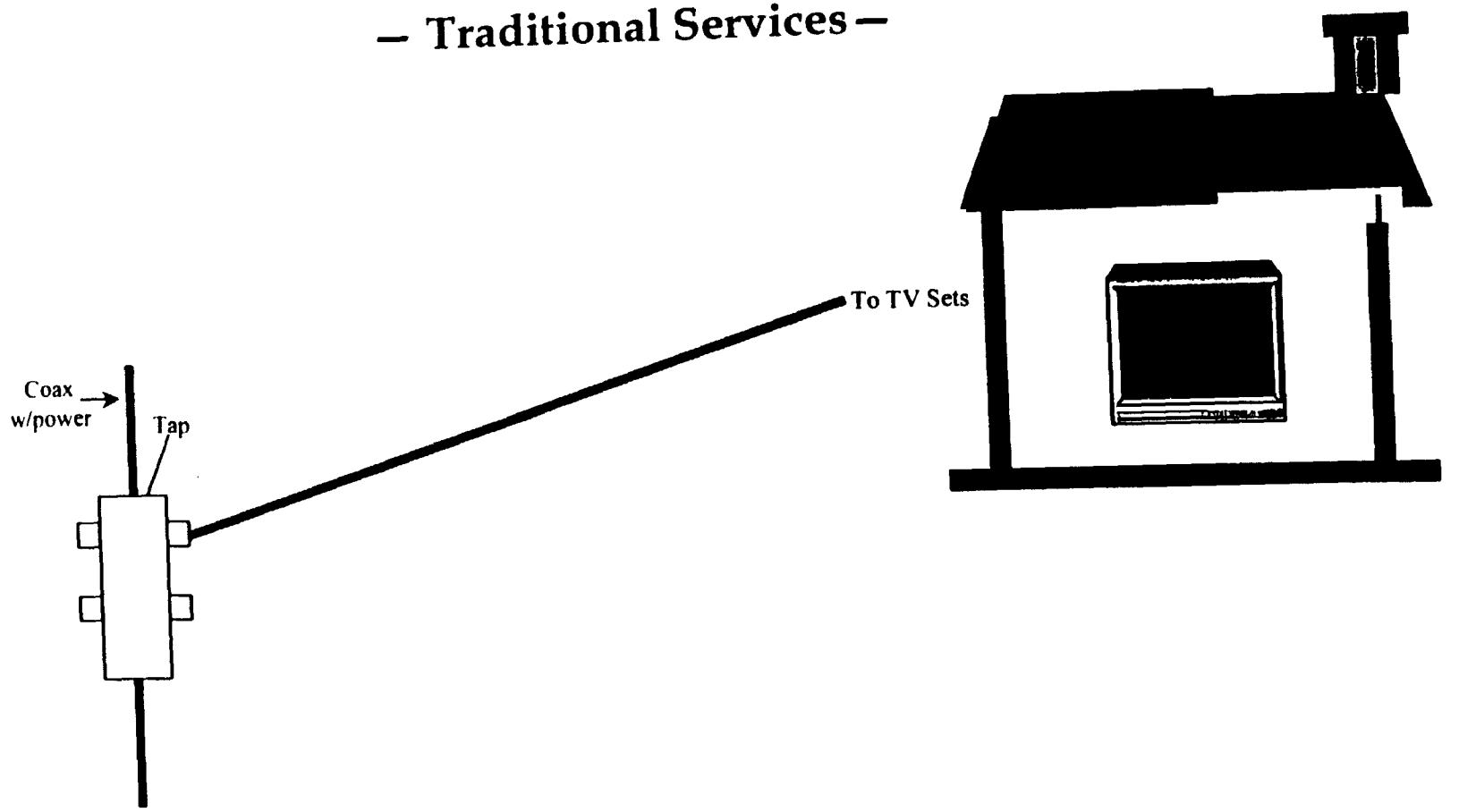

Subscriber Premises: Telephony Overlay

– Network Interface Units –

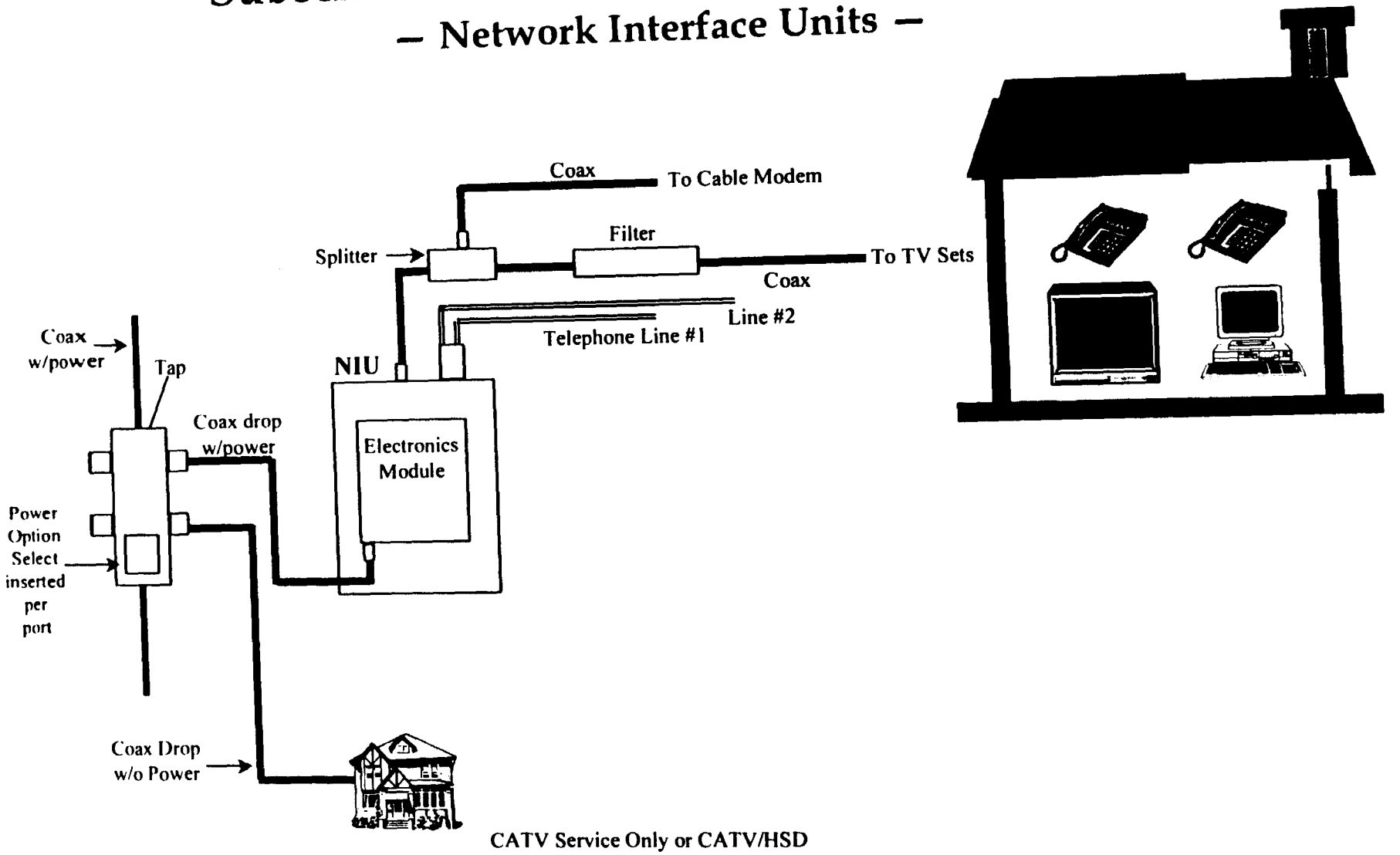

Telephone Overlay
– Interconnections –

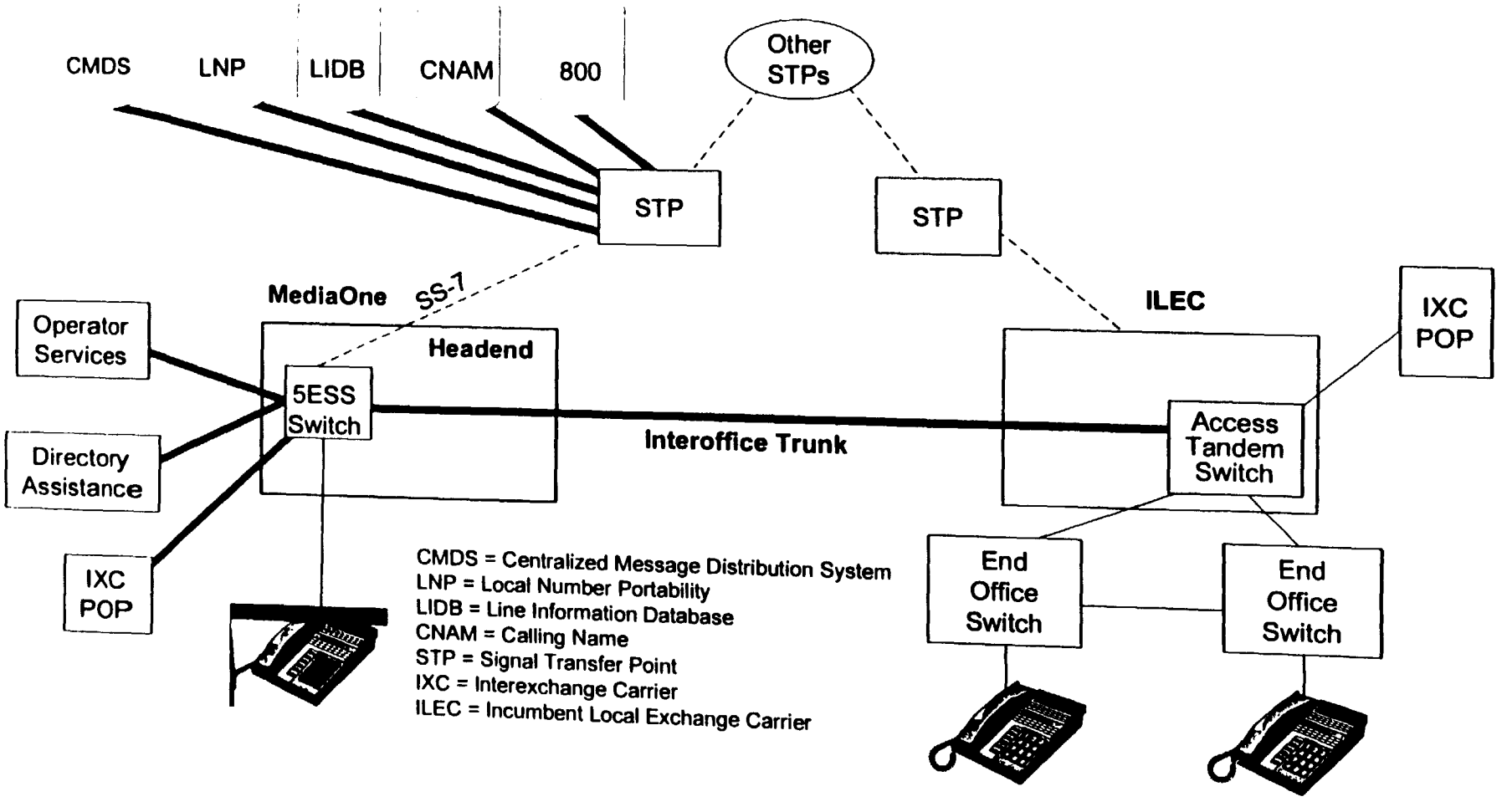

Our Digital Telephone Services

MediaOne Digital Telephone Services
– Consumer Product Packages –

Telephone services include:

- One and two line offerings.
- Lines are equipped with Touch-tone, Custom Calling Services and CLASS features. Call Waiting, Caller ID, Last Call Return, and more are all included on the line.
- Additional products include voice mail, inside wire maintenance, operator services, and directory listings, as well as access to Directory Assistance and E-911.
- Promotional offers include free installation and one free month of service.
- A satisfaction guaranteed switch back to the prior local service provider within 30 days at no cost.
- Customers may keep their telephone numbers.

Using traditional telephone services as a foundation, MediaOne has built product packages that emphasize value, simplicity, and the power of the broadband network.

MediaOne Digital Telephone Services
– Consumer Product Packages –

Competitively Priced Product Offering

- 2 fully-featured telephone lines
- 2 telephone lines: 1 fully-featured and 1 basic line
- 1 fully-featured telephone line
- Additional products such as voice mail, inside wire maintenance, directory assistance, operator services and directory listings
- One free month of service

Promotional Offers

- Free installation
- Satisfaction guarantee

MediaOne vs. BellSouth - Atlanta

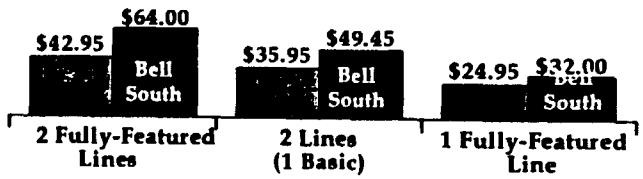

MediaOne vs. Pacific Bell - Los Angeles*

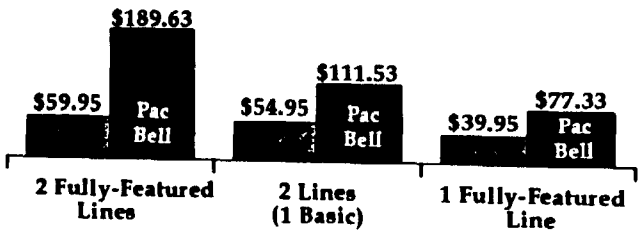

MediaOne vs. GTEC - Los Angeles *

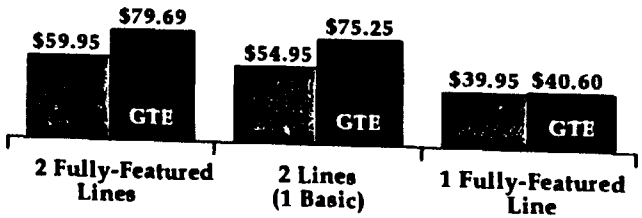

MediaOne vs. Bell Atlantic - Richmond

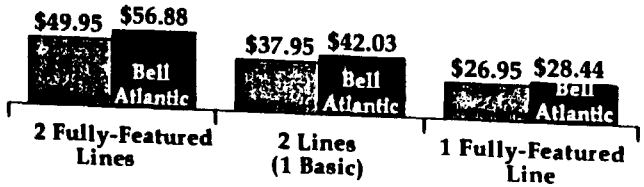

* Includes 500 minutes of intraLATA calls.

What We Need From Incumbent Local Exchange Carriers

Achieving Seamless Interconnection for Consumers

- As a facilities-based provider, MediaOne Digital Telephone Services operates from a position of relative independence from the ILECs.

- However, MediaOne requires essential elements from the ILECs:
  - Interconnection of local telephone networks.
  - Interim and long-term number portability.
  - Access to wiring in multiple dwelling units.
  - Access to ancillary services.

- MediaOne also requires telephone numbers to provide service.

Connecting Consumers

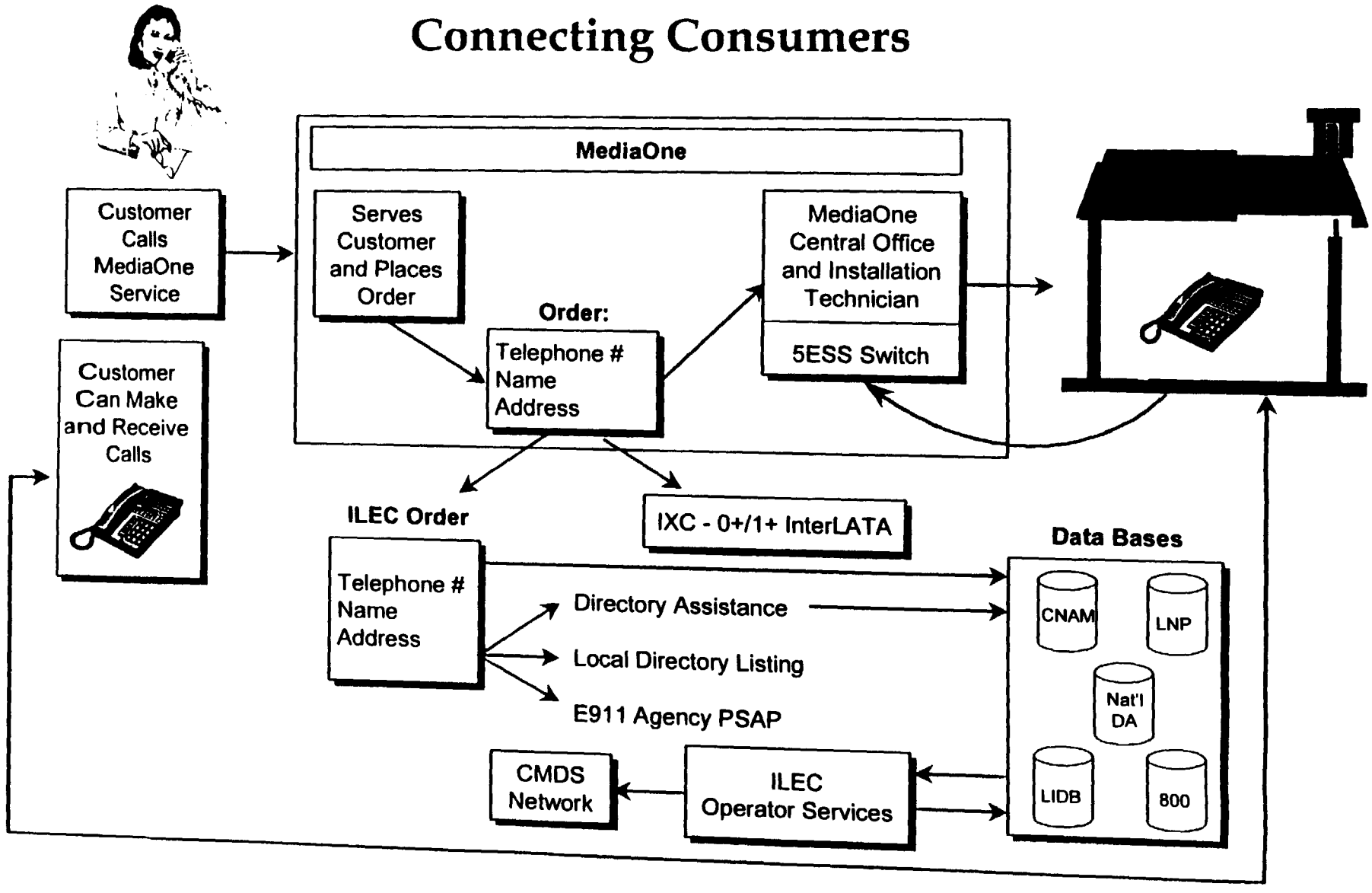

What Does MediaOne Need From The ILEC When A Customer Orders MediaOne Telephone Service?

- Can MediaOne interconnect with the ILEC?
- Can MediaOne interconnect with the ILEC's signaling network?
- Can the customer's current phone number be ported?
- Can the customer get a new phone number?
- Will the ILEC provide intraLATA long distance?
- Will the ILEC cooperate in the cut-over of service?
- Does MediaOne have access to network terminating wire?
- Are two or more lines available for the MDU customer?

MediaOne is dependent upon the ILEC for essential elements.

Can MediaOne Interconnect With The ILEC?

- Trunking is critical to customer access.
  - MediaOne 's experience :
    - BellSouth: MediaOne customers experienced severe service disruptions in 8/97, 10/97 and 1/98. BellSouth's trunk group additions were delayed -- the 1st time 30 days, the 2nd time 75 days.
    - Bell Atlantic: MediaOne provides timely forecasts but still experiences Bell Atlantic delays in processing interconnection trunk groups.
    - Pacific Bell: MediaOne places trunk orders. The ILEC is slow to respond, and when it does, the dues dates are unreasonably long. MediaOne has and continues to experience frustrating delays.
    - GTE-California: The ILEC will not install trunks per MediaOne's forecasts , and is limiting MediaOne to ten trunks per tandem.
- GTE-California has had translation errors that have blocked incoming calls to MediaOne's customers. Further, GTEC does not have a sufficient staff of trained employees to handle trouble resolution. Also, GTEC does not follow agreed-upon change management process.

ILECs are not providing interconnection circuits and trouble resolution on a reasonable or timely basis.

Can MediaOne Interconnect With The ILEC's Signaling Network?

- In order for MediaOne to offer comparable service packages that include Custom Calling and CLASS services, MediaOne must be able to pass and receive appropriate messages with the ILECs.
- MediaOne 's experience :
  - Pacific Bell: When MediaOne requested message testing necessary for Custom Calling, Pacific Bell refused to cooperate for two months. MediaOne had to escalate to the California PUC.
  - GTE-California: The ILEC refused to provide message testing.
  - Bell Atlantic: The ILEC would not provide Illuminet, MediaOne's SS7 provider, with the necessary signaling parameters needed for MediaOne to implement its Caller ID Name services.

The cost to MediaOne: precious resources and business delays.

Can The Customer's Current Telephone Number Be Ported?

- Number portability is essential to meaningful facilities-based competition as customers are reluctant to switch to MediaOne if they must change telephone numbers.
- MediaOne 's experience :
  - BellSouth:
    - Under INP, the ILEC's original fax environment caused MediaOne to adopt a 7 work day installation commitment.
    - Under LNP, BellSouth-imposed a 48 hour interval to provide a FOC or discrepancy. At first, this was met about 50% of the time. MediaOne is now starting to receive electronic FOCs within 24 hours.
      - » However, LNP - clarifications are received via fax -- this typically takes 3 days. Electronic response has been promised.

Can The Customer's Current Telephone Number Be Ported?

- MediaOne 's experience (continued) :
  - Pacific Bell:
    - Under INP, many MediaOne customers were left without service when Pacific Bell worked orders improperly (e.g., orders were not released, orders were worked prematurely or were delayed).
    - Under LNP, MediaOne has experienced numerous problems with Pacific Bell from an ordering and provisioning standpoint.

Can The Customer's Current Telephone Number Be Ported?

- MediaOne 's experience (continued) :
  - GTE-California:
    - At one time, MediaOne had 80% of its LNP orders rejected by GTEC.
      - » The process has improved. However, ordering and provisioning problems caused by GTEC continue to lead to MediaOne's submission of reorders, customer service interruptions and customer complaints and cancellations.
    - GTEC missed its commitment to meet an agreed upon customer conversion schedule for INP to LNP.
    - GTEC did not provide an address verification system for many months -- now GTEC has a manual process. MediaOne must fax requests and wait 24 hours for response.
    - GTEC reassigns, to its new customers, telephone numbers that have been ported to MediaOne.

Can The Customer's Current Telephone Number Be Ported?

- MediaOne 's experience (continued) :
  - Bell Atlantic:
    - The ILEC was aware of MediaOne's launch date of 9/1/98. However, on 9/4/98, Bell Atlantic informed MediaOne that it did not have an INP billing process and MediaOne would have to reschedule its porting dates.
    - MediaOne requested variable call forwarding to smooth out the processes associated with INP. Even though Bell Atlantic's CLEC handbook includes a section on the service, MediaOne was told that it could not order it. Later Bell Atlantic said that there were "undefined" operational issues. After weeks of delay, Bell Atlantic finally agreed to offer variable call forwarding.
    - Bell Atlantic refuses to test new INP procedures.

MediaOne has had to halt its marketing efforts while ILEC number portability issues are mended. MediaOne's customers have experienced service interruptions.

Can The Customer Get A New Telephone Number?

- In the greater Los Angeles area, MediaOne's facilities cross six area codes: 213, 323, 310, 714, 626 and 562.
  - All of these area codes are in jeopardy:
  - The California PUC has instituted a lottery to conserve NXXs.
- To date, MediaOne has obtained 26 NXX codes. MediaOne requires 20 additional codes.
- The California PUC denied MediaOne's request for immediate codes, but is revising the existing lottery process.
- The California PUC has filed a petition with the FCC requesting authority to conduct NXX code rationing.

Pacific Bell and GTE have access to a large number of telephone numbers and can offer service to customers in areas where NXX codes are rationed and availability is severely limited.

On the other hand, MediaOne cannot market to some areas because it does not have telephone numbers.

Will The ILEC Provide IntraLATA Long Distance?

- Bell Atlantic is refusing to offer its intraLATA toll service to MediaOne local exchange customers --
  - This is contrary to the provisions of Bell Atlantic's Massachusetts tariff.
  - If a consumer wants Bell Atlantic's intraLATA toll service, the consumer must also take Bell Atlantic's local exchange service.

Bell Atlantic's position not only violates its tariff obligations, but it also discriminates against all non-Bell Atlantic's local exchange customers by denying them the choice of the ILEC's toll service.

Will The ILEC Cooperate In The Cut-Over Of Service?

- When customers change service providers, the transition must be seamless -- that is, their service should not be disrupted.
  - MediaOne's customers have been inconvenienced as a result of:
    - BellSouth discriminatory repair treatment (which resulted in the customer leaving MediaOne and returning to BellSouth).
    - Problems with provisioning orders on Saturday (centers not open or open only for limited hours) -- Bell Atlantic, Pacific Bell and GTE-California.
    - Bell Atlantic failed to include MediaOne's NXX codes in Bell Atlantic's directory assistance database.
    - GTE-California has been slow to correct errors in directory listings.
    - MediaOne's customers have experienced anti-competitive win-back efforts of GTE-California.
    - GTE-California and Bell Atlantic send bills to MediaOne's customers.
    - Bell Atlantic refuses to intercept messages for customers who change to MediaOne service with a new telephone number.

MediaOne has experienced cumulative delays because of discriminatory access to directory assistance, support services and repair. MediaOne's customers have been inconvenienced.

The Customer Lives In A Multiple Dwelling Unit -- Can MediaOne Offer Service? --

- MediaOne must be able to obtain reasonable access to MDU wiring.
- BellSouth has established separate demarcation points at each of the units within the MDUs it serves.
  - BellSouth retains control of the wiring between the individual units and the minimum point of entry.
  - BellSouth has established uneconomic and operationally burdensome methods and procedures.
  - BellSouth will lease additional pairs -- if available.

MediaOne cannot offer service to BellSouth customers in Multiple Dwelling Units.

Multiple Dwelling Unit
Preferred Arrangement

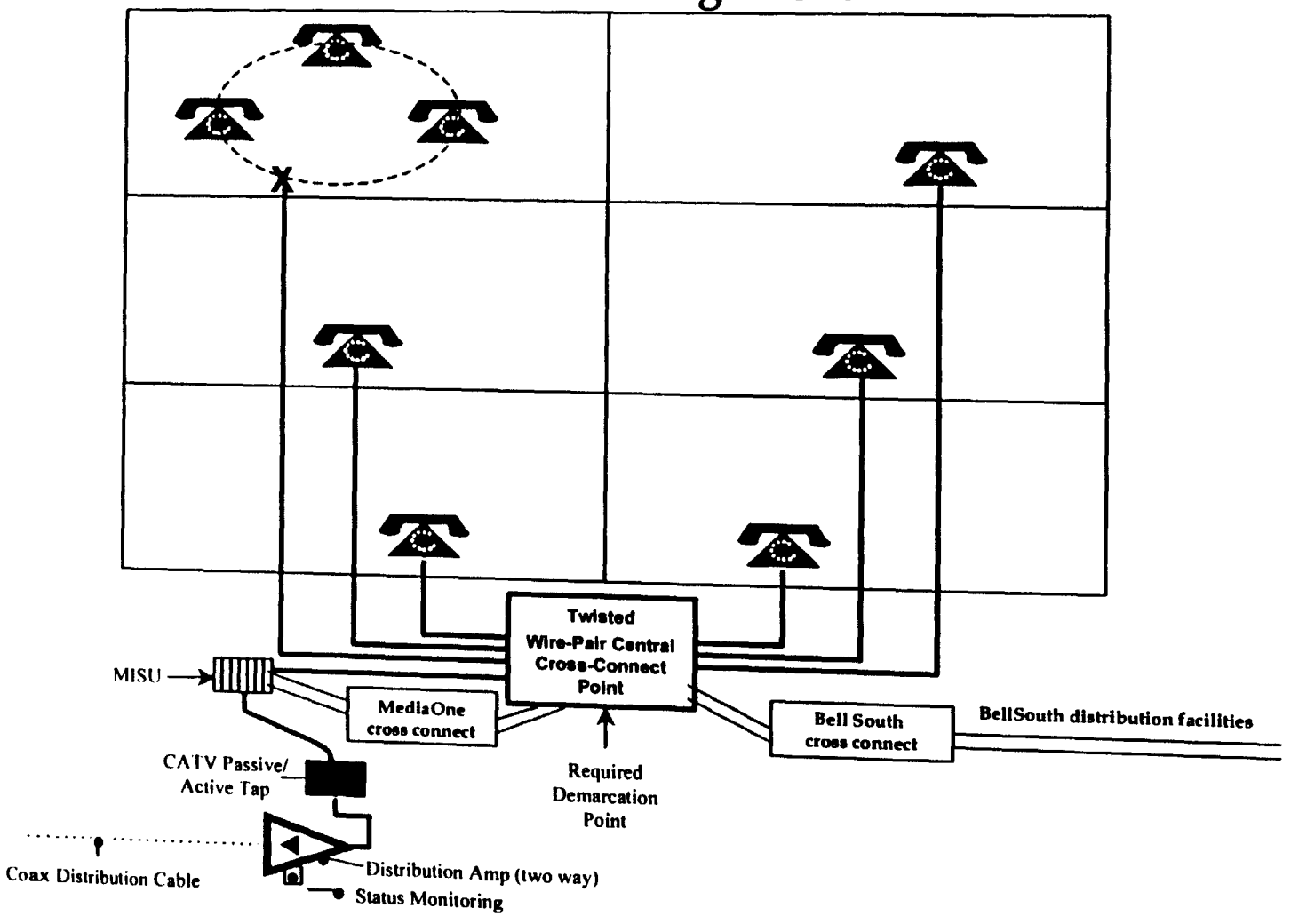

MISU = Multiple Individual Subscriber Unit

Summary

What The ILECs Must Provide To Enable MediaOne To Offer Effective Facilities-Based Competition to Residential Consumers

- Seamless cut-overs for new MediaOne customers.
- Equal access to ILECs' intraLATA toll.
- Equal access to directory assistance, support, services and repair.
- Equal access to ILEC premises wire in apartment buildings.

What The ILECs Must Provide, On A Timely And Reasonable Basis, To Enable MediaOne To Offer Effective Facilities-Based Competition to Residential Consumers

- Interconnection trunks.
- Signaling interface testing
- Number portability
- Access to ILEC intraLATA toll
- Parity of provisioning
- Trouble resolution procedures
- Elimination of duplicate billing
- Elimination of anti-competitive win-back efforts
- Access to MDU wiring

Until the ILECs remove these barriers to entry, local telephone markets will remain closed to competition.

Summary of MediaOne Interconnection Status

Checklist Item Requirements	Corrective Actions Taken By ILEC	Remaining ILEC Deficiencies
1. **Interconnection** • Provide interconnection at any technically feasible point, including collocation on terms and conditions that are just, reasonable, and nondiscriminatory. • Provision interconnection trunks in a manner that is equal in quality to the way in which the BOC provisions trunks for its own services.		1. NXX code opening failures and delays. (GTE, PB) 2. Switch translation errors caused severe service interruptions for MediaOne customers (ILEC sent 13 digits instead of 10 digits). Since MediaOne customers could not receive calls, ILEC would not open trouble ticket for 48 hours. (GTE) 3. Lack of trained staff for trouble reporting and resolution. (GTE) 4. Does not follow change management process agreed to in state workshops. (GTE) 5. Lack of methods and procedures. (BA, BS, GTE, PB) 6. Refuses to provide escalation lists and procedures. (BA, GTE) 7. Slow response to trunking requests. (BA, BS, PB) 8. Delayed trunk provisioning. (BA, BS, PB) 9. Unwillingness to accept trunk forecasts. (GTE) 10. Ten trunk per tandem limit. (GTE) 11. Anti-competitive win back efforts. (GTE) 12. Continues to bill former customers. (BA, GTE)
2. **Access to Unbundled Network Elements** • Deployment of necessary systems and personnel to provide competing carriers with access to each of the necessary OSS functions. ♦ Provide electronic and manual interfaces that allow competing carriers to access all OSS functions. ♦ Provide interfaces that allow competing carriers to transfer	1. Refused to do Saturday provisioning. (BS)	1. Unwillingness to offer intraLATA toll to MediaOne local exchange customers. (BA) 2. Refusal to do Saturday provisioning. (BA) 3. ILEC Local Service Center (LSC) is not open on Saturdays so MediaOne cannot process orders. (PB) 4. Will process orders on Saturday but "shuts off" MediaOne processing by 1 P.M. (GTE)

N/A = Not Applicable to MediaOne as a Complete Facilities-Based Provider of Local Residential Telephone Service.

Checklist Item Requirements	Corrective Actions Taken By ILEC	Remaining ILEC Deficiencies
information received from the BOC to their own back office systems and among the various interfaces provided by the BOC. ♦ Demonstrate that OSS functions and interfaces are operationally ready to handle current demand as well as reasonably foreseeable demand. ♦ Provide access to OSS functions in substantially the same time and manner as the BOC provides to itself where a retail analogue exists. ♦ Provide access to OSS functions in a manner that provides an efficient competitor a meaningful opportunity to compete where no retail analogue exists. ♦ Provide actual commercial usage, or carrier-to-carrier testing, independent 3rd party testing, and internal testing to demonstrate the OSS interfaces are operationally ready. ♦ Provide any technically feasible method for accessing unbundled network elements, including physical or virtual collocation. ♦ Provide nondiscriminatory access to network elements in a manner that allows competing carriers to combine such elements.		5. Lack of performance standards and measurements. (BA, BS, GTE, PB) 6. Discriminatory repair treatment. (BS) 7. Burdensome training requirements. (PB) 8. No electronic bonding. (BA, BS, GTE, PB)
3. **Access to Poles, Ducts, Conduits, and Rights-of-Way** • Establish nondiscriminatory procedures for evaluating facilities requests pursuant to section 224. • Grant competitors nondiscriminatory access to information on facilities availability. • Permit competitors to use non-BOC		1. Unwillingness to provide access to MDU wiring. (BS) 2. Additional NIU requirement. (BS)

N/A = Not Applicable to MediaOne as a Complete Facilities-Based Provider of Local Residential Telephone Service.

Checklist Item Requirements	Corrective Actions Taken By ILEC	Remaining ILEC Deficiencies
workers to complete site preparation. • Comply with state and federal rates.		
4. **Unbundled Local Loops** • Provide access to various types of unbundled local loops sufficient to allow an efficient competitor a meaningful opportunity to compete. • Provide loop cutovers based on reasonably foreseeable demand in a nondiscriminatory manner.	N/A	N/A
5. **Unbundled Local Transport** • Provide nondiscriminatory access to transport facilities.	N/A	N/A
6. **Unbundled Local Switching** • Provide the line-side and trunk-side facilities of the switch. • Provide the basic switching function. • Provide all vertical features that the switch is capable of providing. • Provide technically feasible customized routing functions. • Provide trunk ports on a shared basis. • Provide unbundled tandem switching. • Provide usage information for billing for exchange access and reciprocal compensation.	N/A	N/A
7. **911 and E-911 Services** • Provide access in the same manner it obtains such access. • Provide facilities-based competitors with interconnection through the use of dedicated trunks from the requesting carrier's switching facilities to the 911-control office. • Provide facilities-based competitors unbundled access to its 911 database at		1. E-911 orders incorrectly worked. (GTE)

N/A = Not Applicable to MediaOne as a Complete Facilities-Based Provider of Local Residential Telephone Service.

Summary of MediaOne Interconnection Status

Checklist Item Requirements	Corrective Actions Taken By ILEC	Remaining ILEC Deficiencies
parity with the access it provides itself. **Operator Services and Directory Databases** • Provide nondiscriminatory access to its directory assistance database on a "per dip" inquiry basis. • Provide nondiscriminatory access to BOC-supplied operator services and directory assistance. • Make available unbranded or rebranded operator services and directory assistance through its platform. • Provide nondiscriminatory access to all the information in its directory assistance database.	1. Failure to include NXXs in DA database. (BA) 2. Delays in provisioning DA. (BA)	1. Refuses to offer intercept messages for customers who change to MediaOne service with a new number. (BA)
8. **White Pages Directory Listings** • Provide nondiscriminatory appearance and integration of white page listings to customers of competitors. • Provide white page listings for competitor's customers with the same accuracy and reliability that it provides to its own customers.		1. Listing errors. (GTE) 2. Records dropped. (GTE, PB)
9. **Numbering Administration** • Adhere to industry guidelines and FCC requirements.		1. Refuses to participate in code conservation trials. (GTE, PB)
10. **Databases and Associated Signaling** • Provide nondiscriminatory access to signaling networks, including signaling links and signaling transfer points. • Provide nondiscriminatory access to call-related databases necessary for call routing and call completion, or in the alternative a means of physical	1. Delay in submitting Caller ID signaling parameters to SS7 provider. (BA) 2. Two-month delay in Custom Calling message testing. (PB)	1. Eight-month delay in Custom Calling message testing. (GTE)

N/A = Not Applicable to MediaOne as a Complete Facilities-Based Provider of Local Residential Telephone Service.

Checklist Item Requirements	Corrective Actions Taken By ILEC	Remaining ILEC Deficiencies
access to the signaling transfer points linked to the unbundled database. • Provide nondiscriminatory access to Service Management Systems.		
11. **Number Portability** • Provide all interim number portability through RCF, DID or other comparable and technically feasible interim number portability methods as soon as reasonably possible following a specific request from a competitor. • Demonstrate that long-term number portability will be, or has been, deployed in the state in accordance with the FCC's implementation schedule. • Provide nondiscriminatory access to the various functions of the BOCs' operations support systems to request and obtain number portability in a timely and efficient manner. • Demonstrate that the provisioning of number portability is coordinated with loop cutovers.	1. INP fax requirement resulted in 7 day installation interval. (BS) 2. Lack of INP billing process. (BA) 3. Variable Call Forwarding deployment delayed. (BA) 4. Missed commitment to meet an agreed upon customer conversion schedule for INP to LNP. (GTE) 5. Did not provide address verification system for many months. (GTE)	1. Error prone process and orders worked incorrectly. (BA, BS, GTE, PB) 2. Reassigned MediaOne's ported telephone numbers to ILEC's new customers. (GTE) 3. Refusal to test new procedures. (BA) 4. Reluctance to adopt LLC standard 24 hr. interval. Established 48-hr. interval. However, MediaOne is starting to receive electronic FOC within 24 hours. (BS) 5. LNP- clarifications received via fax (INP-clarifications received via EDI). Fax typically takes 3 days to receive. ILEC has promised, starting 4/1/99, to send discrepancies electronically. (BS) 6. At first, 80% LNP rejection rates; now at 30%. (GTE) 7. Erroneous vacant code announcements. (GTE) 8. LSMS links "crashed" - unable to port customers. No warning or feedback provided. (PB) 9. FOCs not received for customer's desired due date. Instead, due date set at ILEC's convenience. (BA) 10. MediaOne had to install ILEC trunks to test porting and porting processes. (BS, PB) 11. Manual process for address verification - requires faxing of request. Turnaround time of 24 hours. (GTE)
12. **Local Dialing Parity** • Establish that customers of competing		

N/A = Not Applicable to MediaOne as a Complete Facilities-Based Provider of Local Residential Telephone Service.

Checklist Item Requirements	Corrective Actions Taken By ILEC	Remaining ILEC Deficiencies
carriers are able to dial the same number of digits that the BOC's customer dials to complete a telephone call and that they do not experience unreasonable delays.		
13. **Reciprocal Compensation** • Establish that reciprocal compensation arrangements are in place. • Make all required payments in a timely fashion.		1. Refuses to pay reciprocal compensation for ISP-bound traffic. (BS)
14. **Resale** • Offer for resale at wholesale rates any telecommunications service that it provides at retail to subscribers who are not telecommunications carriers. • Offers such services for resale without unreasonable or discriminatory conditions or limitations. • Establish that its operations support systems provide access to resold services on a nondiscriminatory basis.	N/A	N/A

N/A = Not Applicable to MediaOne as a Complete Facilities-Based Provider of Local Residential Telephone Service.

PROPOSED MERGER CONDITIONS

1. Interconnection Trunks

In collaboration with the CLECs, the ILECs will develop and implement procedures for the planning and provisioning of interconnection circuits with requesting CLECs. The ILECs must implement these procedures prior to closing the merger. The procedures will include –

- appropriate standards for timeliness of provisioning, and for blocking, testing and trouble reporting;
- a commitment by the ILECs to provide the requesting LEC the number of interconnection circuits that LEC has requested within the agreed-upon time frame; and
- meaningful monetary penalties for the ILECs' failure to meet established deadlines or otherwise to meet its obligations under the negotiated procedures, enforcement by the appropriate state regulatory authority.

2. Signaling Interface Testing

At the request of any certificated CLEC, the ILECs will provide timely, cooperative testing of LEC-ILEC signaling interfaces to ensure compliance with established performance standards and parity of treatment with the ILECs' retail operations.

3. Number Portability

In collaboration with the CLECs, the ILECs will develop and implement procedures for the timely implementation of number portability (interim and long-term). The ILECs must implement these procedures prior to closing the merger. These procedures will include -

- nondiscriminatory access to the functions of the ILECs' OSS to request and obtain number portability in a timely and efficient manner; and
- processes to ensure that the provisioning of number portability is timely and coordinated with loop cutovers
- the imposition of monetary penalties for provisioning errors.

4. Access to ILEC IntraLATA Toll

The ILECs will permit CLEC customers to subscribe to the ILECs' intraLATA toll.

5. Parity of Provisioning

The ILECs will schedule CLEC cutovers using the same scheduling parameters they use for their own retail customers (e.g., if the ILECs provision service for their retail customers in the evenings, or on Saturdays, they must provision CLEC cutovers during the same hours).

6. Trouble-Resolution Procedures

In collaboration with the CLECs, the ILECs will develop and implement procedures for the timely resolution of service outages and troubles, including detailed escalation processes and the imposition of monetary penalties for failing to resolve service outages and troubles consistent with the approved procedures. The ILECs must implement these procedures prior to closing the merger.

7. Duplicate Billing

In collaboration with the CLECs, the ILECs will develop and implement procedures to ensure the prompt cessation of ILEC bills to CLEC customers. The ILECs must implement the approved procedures prior to closing the merger.

8. Anti-Competitive Win-Back Efforts

In collaboration with the CLECs, the ILECs will develop and implement procedures and training materials to preclude anti-competitive attempts to win back customers. The ILECs must implement these procedures prior to closing the merger. The procedures will include -

- safeguards against the use of CLEC-proprietary information;
- measures to prevent the disparagement of CLECs by ILEC representatives; and
- adequate training.

9. NXX Code Openings

In collaboration with the CLECs, the ILECs will develop and implement procedures for the timely and accurate opening of NXX codes. The ILECs must implement these procedures prior to closing the merger.

10. Resolution of Listing Errors

In collaboration with the CLECs, the ILECs will develop and implement procedures for the timely resolution of errors, omissions and delays in providing listings (directory, directory assistance and 911). The ILECs must implement these procedures prior to closing the merger.

Summary of MediaOne's Interconnection Status With GTE-California (GTEC)

The GTEC track record in implementing local interconnection and providing quality service to MediaOne is deficient. Following is a list of anticompetitive actions by GTEC:

1) Interconnection & Signaling

a) GTEC has failed to install trunks per MediaOne's forecasts.
b) GTEC has arbitrarily limited MediaOne to ten trunks per tandem.
c) A recent translation error in the GTEC network blocked incoming calls to MediaOne's customers in three communities.
   i) The blocking occurred in GTEC's network as it was sending 13 digits (e.g., 310 310 NXX XXXX) instead of 10 digits.
   ii) GTEC requires that a trouble ticket be opened before it will begin to fix a problem. However, GTEC refused - for 48 hours - to open a trouble ticket claiming that it was a problem on MediaOne's network.
d) GTEC lacks trained staff for trouble reporting and resolution.
e) GTEC claims that it follows the change management process as agreed to in the California PUC workshops. However, MediaOne continues to be blindsided by GTEC's changes.
   i) Recently, GTEC moved its CLEC maintenance and repair operations to Dallas, Texas - without prior notice.
f) GTEC has balked at providing TCAP message testing.

2) Number Portability

a) GTEC initially rejected nearly all of MediaOne's LNP orders.
b) The LNP process has improved. However, ordering and provisioning problems caused by GTEC continue to lead to MediaOne's submission of reorders, customer service interruptions and customer cancellations and complaints.
c) Within the last 6 weeks, GTEC has been reassigning, to its new customers, numbers that have been ported to MediaOne.
d) GTEC signed off to the industry that it was ready to cut over to LNP as scheduled in July 1998. However, many of MediaOne's customers experienced call failures because GTEC's tandem offices were not LNP equipped for another month.
e) GTEC missed its commitment to meet an agreed upon customer conversion schedule for INP to LNP.
f) MediaOne made repeated requests to GTEC for an address verification system. It was not provided for many months.

i) MediaOne must fax its request to obtain billing name and address. GTEC imposes a 24-hour turnaround.

3) **NXX Code Openings & Code Conservation Matters**

a) GTEC, on an ongoing basis, often fails to open MediaOne's NXX codes in a timely and accurate fashion.
b) GTEC refuses to participate in code conservation measures on either a federal or state basis.
   i) GTEC refused to suggest even a handful of rate centers as rate consolidation candidates.

4) **Directory Assistance Listings**

a) GTEC has been slow to correct errors in its directory listings for MediaOne.

5) **Customer Order Provisioning, Misbilling and Anticompetitive Win-Back Efforts**

a) GTEC refused to provision orders for customers or allow flow through of number portability orders on Saturdays.
   i) GTEC will now process orders on Saturdays, but "shuts down" such that MediaOne cannot process orders after 1 P.M.
b) GTEC has maintained anticompetitive win-back practices - reconnecting dial tone service to customers without their knowledge or authorization and without prior notice to MediaOne.
c) GTEC continues to issue bills in error to its former customers.

6) **Intercarrier Agreement Dispute Resolution**

a) GTEC has refused for many months to provide escalation lists consistent with California PUC dispute resolution policies for trouble or issue resolution.